

EQB

Owner's Manual +

Mercedes-Benz

F243 0102 02

Did you know?

In order to meet all needs, your operator's manual is available to you in various formats.
In addition to this PDF, the following options are open to you:

Digital – in the vehicle
Discover the Owner's Manual in the multimedia system under Preferences. Begin with Quick Start and discover useful tips.

Digital – on the Internet
You can find the Owner's Manual on the Mercedes-Benz homepage https://om.mb4.me/WebOMs.

Printed in the vehicle
Here you will find printed information on operating your vehicle. Depending on the country, additional printed information may be included.

Digital – as an App
The Owner's Manual is available free-of-charge from the common app stores.

Apple® iOS

Android™

Front passenger airbag warning



Observe the chapter "Children in the vehicle".

WARNING
Risk of injury or fatal injuries if the front passenger airbag is enabled

If the front passenger airbag is enabled, a child on the front passenger seat may be struck by the front passenger airbag during an accident.

- NEVER use a rearward facing child restraint system on a seat protected by an ACTIVE AIRBAG in front of it, DEATH or SERIOUS INJURY to the CHILD can occur.

Welcome to the world of Mercedes-Benz

Before your first drive, please read this Owner's Manual carefully and familiarise yourself with your vehicle. For your own safety and a longer operating lifespan for the vehicle, follow the instructions and warnings in this Owner's Manual. Failure to do so may lead to personal injury or damage to the vehicle.

THE EQUIPMENT FEATURES OR PRODUCT DESIGNATIONS OF YOUR VEHICLE MAY DIFFER FROM THE CONTENT DESCRIBED IN THE OWNER'S MANUAL. THE OWNER'S MANUAL DESCRIBES THE FOLLOWING CONTENT:

- The models and the standard and special equipment available at the time of this Owner's Manual going to press.
- The models and the standard and special equipment only available in certain countries.
- The models and the standard and special equipment which will only become available at a later date.

Please note that your vehicle may not be equipped with all features described. This is also the case for safety-relevant systems and functions. In individual cases, your vehicle may therefore differ from that shown in the descriptions and illustrations.

MERCEDES-BENZ KEEPS ADVANCING ITS VEHICLES CONSTANTLY AND THEREFORE RESERVES THE RIGHT TO INTRODUCE CHANGES IN THE FOLLOWING AREAS:

- Design
- Equipment
- Technical features

The latest and complete information about your vehicle and the description of any subsequently uploaded functions are contained in the Digital Owner's Manual in the multimedia system.

The illustrations in this Owner's Manual show a left-hand drive vehicle. For right-hand drive vehicles, the layout of vehicle parts and control elements differs accordingly.

The original purchase agreement for your vehicle includes a list of the equipment features in your vehicle at the time of delivery.

THE FOLLOWING DOCUMENTS ARE COMPONENTS OF THE VEHICLE:

- Digital Owner's Manual in the multimedia system
- Printed Owner's Manual
- Service booklet
- Supplementary manuals relating to specific equipment
- Supplementary documents

Keep these documents in the vehicle at all times. Ensure that all documents are in the vehicle or passed on in the event of sale or rental.

For questions concerning equipment and operation, please contact a Mercedes-Benz service centre.

Disclaimer
The following online version of the Owner's Manual describes all models as well as all standard and special equipment of your vehicle. Country-specific deviations are possible among the various languages. Note that your vehicle may not be fitted with all features described. This is also the case for safety-relevant systems and functions.

Please contact your authorised Mercedes-Benz dealer in order to receive a printed Owner's Manual for other vehicle models and vehicle model years. The Online Owner's Manual is the current version. Possible variations to your vehicle may not be taken into account as Mercedes-Benz constantly updates their vehicles and equipment to the state of the art and introduces changes in design and equipment.

Please also read the printed Owner's Manual, supplementary documents and the digital Owner's Manual in the vehicle.

COPYRIGHT

All Rights Reserved. All texts, images and graphics are subject to copyright law and other laws protecting intellectual property. They may not be copied for commercial purposes or for transmission, nor changed and used on other websites.

Contents

This interactive PDF works like a website – tap or click a button to jump straight to where you want to go.
You can return here at any time via the navigation bar at the top left.

Symbols
Quick start and Tips
At a glance
Digital Owner's Manual
General notes
Occupant safety
Children in the vehicle
Opening and closing
Seats and stowing
Light and sight
Climate control
Driving and parking
Driver display
MBUX Voice Assistant
MBUX multimedia system
Maintenance and care
Breakdown assistance
Wheels and tyres
Technical data
Display messages and warning/indicator lamps
Index

Symbols

This interactive PDF works like a website – tap or click a button to jump straight to where you want to go.
You can return here at any time via the navigation bar at the top left.

In this Owner's Manual, you will find the following symbols:

WARNING
Danger due to not observing the warning notices

Warning notices draw your attention to hazards that may endanger your health or life, or the health or life of others.

► Observe the warning notices.

ENVIRONMENTAL NOTE
Environmental damage due to failure to observe environmental notes

Environmental notes include information on environmentally responsible behaviour or environmentally responsible disposal.

► Observe environmental notes.

NOTE
Damage to property due to failure to observe notes on material damage

Notes on material damage inform you of risks which may lead to your vehicle being damaged.

► Observe notes on material damage.

These symbols indicate useful instructions or further information that could be helpful to you.

►	Instruction
(→ page)	Further information on a topic
Display	Display in the central display
	Highest menu level, which is to be selected in the multimedia system
	Relevant submenus, which are to be selected in the multimedia system
*	Indicates a cause

Quick start and Tips

This interactive PDF works like a website – tap or click a button to jump straight to where you want to go.
You can return here at any time via the navigation bar at the top left.

Children in the vehicle
Radio
Wi-Fi hotspot
Connecting a mobile phone
MBUX Interior Assistant
MBUX Voice Assistant
ENERGIZING Packages
Driving Assistance package
Parking Package
High-voltage battery AC charging (mode 2 or 3)
High-voltage battery direct current charging (mode 4)
Destination entry navigation
New multimedia system features
At the filling station
Preparing for a holiday
Luggage and loading
Ice and snow
Help in the event of a breakdown
Expert knowledge

Children in the vehicle

Safely transporting children in the vehicle

- When children are travelling in the vehicle, always observe the following (⟶ page 141)
- Important warning stickers (⟶ page 142)
- Recommended child restraint systems (⟶ page 149)
- Suitable seats in the vehicle for fitting a child restraint system (⟶ page 139)
- Approval categories for child restraint systems (⟶ page 148)
- Suitability of seats for securing ISOFIX/LATCH child restraint systems (⟶ page 153)
  - Fitting the ISOFIX child restraint system on the rear seat (⟶ page 159)
- Suitability of seats for securing i-Size child restraint systems (⟶ page 155).
  - Fitting the i-Size child restraint system on the rear seat (⟶ page 159)
- Securing a Top Tether belt (⟶ page 161)
- Suitability of seats for securing belt-secured child restraint systems (⟶ page 155)
  - Notes on vehicles without automatic front passenger airbag deactivation (⟶ page 147)
  - Notes on rear-facing and front-facing child restraint systems on the front passenger seat (⟶ page 145)
  - Securing the child restraint system with the seat belt (⟶ page 162)
- Automatic front passenger airbag deactivation (⟶ page 145)
- Child safety locks for the rear side windows (⟶ page 166)
- Child safety locks for the rear doors (⟶ page 164)

Radio

Operating radio

► **To switch to radio:**
- Briefly press [⌂] in the multimedia system display.
- Tap on [♪].

► **To set the frequency band:**
- Briefly press [⌂] in the multimedia system display.
- Tap on [♪].
- Select a frequency band or a favourite.

► **To set a radio station:**
- Briefly press [⌂] in the multimedia system display.
- Tap on [♪].
- Swipe to the left or right on the control element or select a radio station.

► **To call up the radio station list:**
- Briefly press [⌂] in the multimedia system display.
- Tap on [♪].
- Select [☰].

► **To search for radio stations using station names or frequency entry:**
- Briefly press [⌂] in the multimedia system display.
- Tap on [♪].
- Select [🔍].
- Enter a station name or frequency.
- Select a station.

► **To store radio stations:**
- Briefly press [⌂] in the multimedia system display.
- Tap on [♪].
- Select [☆].

► **To set the traffic information service volume increase:**
- Briefly press [⌂] in the multimedia system display.
- Tap on [⚙].
- Select System.
- Select Audio.
- Select Navigation & traffic announcements.
- Set a value for Traffic announc. vol. increase.

Wi-Fi hotspot

Setting up a Wi-Fi hotspot

GENERALLY, TWO TYPES OF WI-FI CONNECTION ARE AVAILABLE:

- Using the multimedia system as a Wi-Fi hotspot

  The multimedia system serves as a Wi-Fi hotspot for mobile communication devices such as a smartphone or tablet PC.

  The data volume of the vehicle or an already connected tethering device is used for the data connection.

  Data volume must be purchased for a fee via the Mercedes-Benz Portal.

  The use of the vehicle data tariff by external devices is not available in all countries.
- Using a mobile communication device as a Wi-Fi hotspot (tethering)

  An external Wi-Fi hotspot is accessed for the Internet connection of the multimedia system.

  The data tariff of the mobile communication device via Data package is used for the data connection.

OPTIONS FOR SETTING UP A CONNECTION:

- QR code

  The connection is set up by scanning the QR code shown on the multimedia system.
- NFC

  The connection is set up by placing the mobile communication device in the NFC interface of the vehicle.
- Security key

  The connection is established by entering the security key displayed on the multimedia system.

Connecting a mobile phone

Connecting a mobile phone

► **Activating Bluetooth®:**

- Make sure that the mobile phone Bluetooth® is switched on.
- Tap on [⌂] the central display or media display.
- Select Settings.
- Select System.
- Select Internet and Bluetooth.
- Activate Bluetooth®.

► **Searching for a mobile phone:**

- Tap on [⌂] the central display or media display.
- Select Phone.
- Select [⚙].
- Select Devices.
- Select Devices.
- Select Connect new device.

► **Authorising a mobile phone:**

- Select a mobile phone.

A code is displayed in the multimedia system and on the mobile phone.

► If the codes match, confirm the code on the mobile phone.

MBUX Interior Assistant

Using the MBUX Interior Assistant

If the vehicle is fitted with the MBUX Interior Assistant, selected functions of the multimedia system can be operated contact-free

The Assistant recognises driver and front passenger interactions.

THE ASSISTANT SUPPORTS VEHICLE AND INFOTAINMENT FUNCTIONS AT THREE INTERACTION LEVELS:

- INTELLIGENT
  The Assistant recognises vehicle occupants and objects automatically and activates functions.
- REACTIVE
  The Assistant recognises the natural body language of a vehicle occupant and carries out functions automatically, appropriate to the situation.
- CONTACTLESS
  The vehicle occupant actively requests a function using a hand movement or pose.

THE ASSISTANT OFFERS FUNCTIONS FOR THE FOLLOWING:

- SAFETY
  The Assistant supports vehicle occupants with the use of restraint systems.
- COMFORT
  The Assistant enhances comfort by automating functions inside the vehicle and supporting natural interaction with the vehicle.
- INFOTAINMENT
  The Assistant facilitates operation of the Infotainment functions.

One application example is switching the reading light on or off.



Carrying out operation of the reading light for the driver and front passenger

► Move your hand up and down under the inside mirror.
The reading light is switched on or off.

MBUX Voice Assistant

Operating the MBUX Voice Assistant

YOU CAN USE THE MBUX VOICE ASSISTANT TO OPERATE THE FOLLOWING FUNCTIONS DEPENDING ON THE VEHICLE EQUIPMENT:

- Telephone
- Text message and e-mail
- Navigation
- Radio and media
- Vehicle functions
- Online functions

EXAMPLES OF POSSIBLE VOICE COMMANDS:

- To operate the phone: Call my father.
- To manage e-mails: Show me my new e-mails.
- To operate the navigation: Search for an Asian restaurant, but not Japanese, in South London.
- To operate the radio: Which station am I currently listening to?
- To operate media: Play a similar track.
- To operate climate control: My feet are cold.
- To operate vehicle functions: Open the window.
- To call up the weather: Will it be sunny tomorrow?
- To ask a general knowledge question: Who painted the picture "The Scream"?

ENERGIZING Packages

Operating ENERGIZING COMFORT

- **To start an ENERGIZING programme:**
  - Briefly press [⌂] in the multimedia system display.
  - Select Comfort.
  - Select ENERGIZING COMFORT.
  - Select a programme and start with [▶].
- **To configure an ENERGIZING programme:**
  - Select a programme.
  - Select Settings.
  - Switch the functions included in the programme on or off.
- **To start Power Nap:**
  - Select Power Nap.
  - Select [▶] for the desired seat.
- **To start a training programme:**
  - Select Training.
  - Select a programme and start with [▶].
  - To activate fragrancing for training, select Air freshener.
- **To start Tips:**
  - Select Tips.
  - Select an area of the body and start with [▶].

Driving Assistance package

Driving Assistance Package functions

Depending on availability for the respective country of use, the vehicle may be equipped with various functions which are provided to assist the driver. The vehicle is therefore fitted with cameras and sensors to monitor the vehicle surroundings.

- **Active Distance Assist DISTRONIC** (⟶ page 361)

You can watch an animation on this topic via the following link:

- **Active Speed Limit Assist** (⟶ page 368)

You can watch an animation on this topic via the following link:

- **Route-based speed adaptation** (⟶ page 369)
- **Active Brake Assist** (⟶ page 374)

You can watch an animation on this topic via the following link:

- **Active Steering Assist** (⟶ page 370)

You can watch an animation on this topic via the following link:

- **Active Emergency Stop Assist** (⟶ page 373)
- **Blind Spot Assist with exit warning** (⟶ page 387)
- **Active Lane Keeping Assist** (⟶ page 389)

Parking Package

Functions of the Parking Package

Depending on availability for the respective country of use, the vehicle may be equipped with various functions which are provided to assist the driver with parking and manoeuvring. The vehicle is therefore fitted with cameras and sensors to monitor the vehicle surroundings.

- **Close-range braking** (⟶ page 410)

You can watch an animation on this topic via the following link:

Depending on the equipment version, the following systems and functions are part of your Parking Package:

- **Reversing camera:** monitors the area behind the vehicle and relays an image of this area on the driver display (⟶ page 391).
- **360° camera:** a system comprising four cameras which record the immediate vehicle surroundings and relay an image to the driver display (⟶ page 395).
- **Parking Assist PARKTRONIC:** an electronic parking assistance system which monitors the area surrounding your vehicle and the distance to obstacles in the vicinity using ultrasound (⟶ page 400).
- **Active Parking Assist:** an electronic parking assistance system which assists you when parking or exiting a parking space by changing gear, accelerating, braking and steering the vehicle (⟶ page 403).

High-voltage battery AC charging (mode 2 or 3)

AC charging (mode 2 or 3)

Starting and ending the charging process (combo 2 socket)

Starting and ending the charging process (combo 1 socket)

- More notes on charging the high-voltage battery (→ page 312)
- Overview of the charging cable control panel (→ page 319)

High-voltage battery direct current charging (mode 4)

DC charging (mode 4)

Starting and ending the charging process (combo 2 socket)

Starting and ending the charging process (combo 1 socket)

- More notes on charging the high-voltage battery (⟶ page 312)
- Overview of the charging cable control panel (⟶ page 319)

Destination entry navigation

Entering a navigation destination

► Briefly press [⌂] in the multimedia system display.

The home screen is shown.

► Select Navigation.

► Select [🔍].

SELECT THE FOLLOWING OPTIONS FOR DESTINATION ENTRY:

- Enter a POI, an address or a three-word address in the input line.

  Online search results for POIs (if available) may contain additional information, for example opening times and prices. The information is provided by an online map service.

  You can find further information about three-word addresses at: http://what3words.com
- Select a destination suggestion.

  Requirements:

  The Navigation option is switched on in the user settings for Suggestions.

  The multimedia system has gathered sufficient data in order to show destination suggestions.
- Select Previous destinations.

  Select a previous destination.

  You can save the destination as a favourite .
- Select POIs.

  Select a POI category, e.g. [P] or enter a POI name or POI category in the input line.

  If search results are displayed, limit them with Filter, for example by search position or the desired travel time.
- Select Contacts.

  Requirements:

  A mobile phone is connected to the multimedia system and contacts have been downloaded.

  The contact contains a navigable address.
- Enter the geocoordinates as latitude and longitude in the input line.

  Example 1: 47°58'11"N 7°57'25"E (degrees, minutes, seconds and compass direction)

  Example 2: 47.969722 7.956944 (decimal degrees)
- Select a destination on the map.
- Select Favourites.

  Requirements:

  The destinations have been saved as favourites.
- Select Received destinations.

  Requirements:

  There is an Internet connection for receiving external destinations.

  The destinations have been sent to the vehicle.

New multimedia system features

Information about the telephone menu



1. Bluetooth® device name of the currently connected mobile phone/of the mobile phone
2. Bluetooth® device name of the currently connected mobile phone/of the mobile phone (two phone mode)
3. Signal strength of the mobile phone network
4. Battery status of the connected mobile phone
5. Options
6. Messages
7. Calls up my devices
8. Numerical pad
9. Starts contact search

TELEPHONE MENU OVERVIEW

Via the telephone menu you can use the functions in connection with your mobile phone.

THE FOLLOWING FUNCTIONS CAN BE USED:

- Call lists
- Contacts
- Messages
- Device manager

USING CALL LISTS

If your mobile phone supports the PBAP Bluetooth® profile, the call lists from the mobile phone are displayed in the multimedia system.

THE FOLLOWING FUNCTIONS ARE AVAILABLE:

- Making calls from the call list
- Opening contacts on the call list

MESSAGES

In the message menu you can receive text messages and create and send them with the help of the MBUX voice assistant. In addition, you can conveniently use the read-aloud function during the journey.

DEVICE MANAGER

In the device manager, you can connect your mobile phone with the multimedia system.

You have the option of using your mobile phone alone in single telephone mode or together with another mobile phone in two phone mode.

USING CONTACTS
If you permit the multimedia system to access the contacts in your mobile phone, you can use these in the vehicle. You can store up to 8,000 contacts.

THE FOLLOWING OPTIONS ARE AVAILABLE TO YOU VIA THE CONTACTS MENU:

- Making telephone calls (calling a contact)
- Navigation
- Composing messages with the help of the MBUX voice assistant
- Additional options

The contacts from your mobile phone can be downloaded automatically or manually.

CONDUCTING A CALL
When conducting a call, additional functions are available apart from making, accepting or rejecting a call. For example, you can switch between calls, conduct a call with several participants or conference calls.

It is also possible to accept or reject waiting calls. If you receive a call while already in a call, a message is displayed.

DURING A CALL YOU CAN ACTIVATE THE FOLLOWING FUNCTIONS:

- Microphone off
- Fade in the numerical pad to send DTMF tones
- Add a call
- Hands-free mode to transfer the call to the front or rear passenger compartment
- Privacy mode to transfer the call to the telephone or headphones

Information about navigation



1. Navigation module (reduced view)
   Route guidance active:
   Reduced view of the navigation module shows information relevant to the route, e.g. the next charging stop, the destination and a traffic delay
   Tapping opens the navigation module and displays the route overview (→ page 507)
   Tapping on the chequered flag ends the current route guidance
2. Sets map orientation and map type
3. Calls up the telephone menu
4. Calls up entertainment applications
5. Navigation window shows the next manoeuvre (zoomed out view) or the route monitor (zoomed in view)
   Route guidance active: route monitor shows, e.g. route sections, upcoming driving manoeuvres with lane recommendations, charging stops, destination, traffic delays, 3D images at motorway exits, online content

When you switch on the multimedia system or after selecting [⌂], the digital map is shown.

The navigation system offers many options for destination entry, route planning and route guidance. The traffic situation is taken into account during route guidance. When using route guidance with augmented reality, additional information can be shown in a camera image before a turning manoeuvre. Services and apps help you reach the destination quickly, safely and in comfort.

After tapping on navigation module (1) start destination entry via [🔍] in the route overview. You can enter the POI, address or contact as the destination on-board or search online using a map service. Or you select a previous destination. The destination can be stored here as a favourite or be saved as an address for home and work. When the Allow destination suggestions option is switched on, the vehicle makes suggestions based on your visited navigation destinations. If external destinations and routes are received from apps or services, these are also available.

THE FOLLOWING OPTIONS ARE AVAILABLE FOR ROUTE PLANNING, FOR EXAMPLE:

- Navigation with Electric Intelligence
  If the Schedule charging stops route option is enabled, the optimal route based on time is calculated with the required charging stops. The charging stops are determined taking into account the route and charging times and are set as intermediate destinations for route guidance.
- Route options:
  e.g. Schedule charging stops and avoid or use toll roads, tunnels, unpaved roads or avoid areas
- Intermediate destinations
- Alternative routes
- Commuter route
- Service station search

You can record and save routes then select or share them with a USB device.

Lane recommendations are shown during route guidance on multi-lane roads. When driving on a motorway, service facilities on the route ahead can be shown and used for route guidance.

The Live Traffic Information service takes the current traffic situation into account. The map can show the current traffic flow, traffic incidents or warning messages, e.g. before the end of traffic jams that pose a risk.

Hazardous situations on public roads are detected automatically by the vehicle via Car-to-X-Communication or these can be reported by the driver. The early warning makes it possible to adapt your driving characteristics in good time. Accidents, broken-down vehicles, weather hazards or a vehicle with activated hazard warning lights are shown on the map.

For route guidance with augmented reality, information objects such as arrows indicating a turn, street names and house numbers are shown in a video image during the driving manoeuvre or at traffic lights.

The map shows map data from the database or from an online map service. In small map scales, buildings are shown as realistic images. The online map update service makes possible the updating of the map data.

Weather information and data from other services can be shown on the map. Multi-storey car parks with the corresponding equipment, deliver data about the current occupancy and about parking charges, for example.

The options offered vary depending on the country, vehicle equipment and available services.

NAVIGATION MODULE (EXPANDED VIEW) WITH ROUTE OVERVIEW

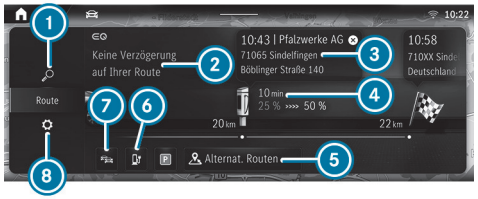

Example: route guidance is active

1. Enters an address or POI
2. Information about delays along the route
3. Arrival time and address for the charging stop
4. Charging stop shows the charging time recommended by the Navigation with Electric Intelligence as well as states of charge on arrival and onward journey for an optimal travel time
   as well as: current distance to charging stop
5. Alternative routes
6. Searches for an additional charging station
7. Switches traffic information display on or off
8. Makes settings for View, Messages & tones and Route

Information on radio

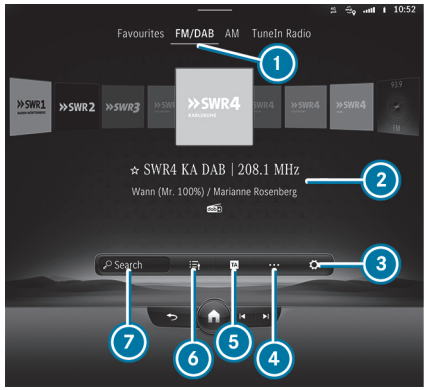

1. Active frequency band
2. Station name or set frequency
3. Settings
4. Additional options
5. Switches on traffic reports
6. Station list
7. Search

Using the radio menu you can play a multitude of radio stations and use the Internet Radio TuneIn. Search for your preferred stations and save these as favourites or in station lists.

ⓘ The function of TuneIn Internet radio is country-dependent.

Radio text: this function shows you the station name, the track and the artist for the song currently playing, for example.

DAB: with the DAB function, graphically formatted additional information about a station can be shown, e.g. logos, album covers, music tracks, programmes, news or also service information.

Traffic announcements: Traffic messages can be displayed by pressing TA.

Information on media

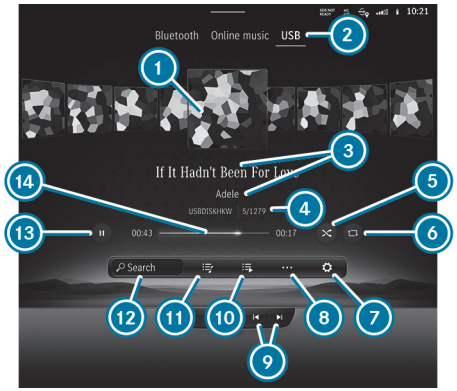

1. Album cover
2. Active media source
3. Track and artist
4. Active data storage medium and current track number/track in playback list
5. Random playback
6. Repeat
7. Settings
8. Additional options
9. Previous or next track and fast rewind or fast forward
10. Additional categories
11. Playlists and categories
12. Media search
13. Controls playback
14. Timeline

Using the Media application, you can set and use the audio and video functions of your multimedia system. You can listen to music or look at videos, for example.

USB: Using the USBmenu, you can play back your own audio or video data from a data storage medium connected by USB.

Bluetooth®: using the Bluetooth menu, you can connect a Bluetooth® audio device with the multimedia system and play back the available tracks on the audio device. Connecting the device can be conveniently handled in the device manager, so you can complete all settings with just a few clicks.

Online music: the Online music menu allows you to access music streaming services.

Notes on comfort

The Comfort menu makes all the functions available that contribute to your comfort when driving or taking a break.

SEAT COMFORT

The Seat menu allows you to flexibly adjust the contours of the seats to your needs by adjusting the side bolsters and lumbar support independently. You can save these settings in your Mercedes me profile, so they can be called up each time you drive. With the Seat kinetics function, you can start a programme that causes slight modifications of the seat position when you are driving. These modifications promote a healthy back.

MASSAGE
In the Massage menu you will find the massage programmes that are available for your vehicle. By selecting the desired programme you start it directly and it runs for a period of approximately ten minutes, depending on the programme selected. With the High intensity function you can increase the effect of the massage programme.

AMBIENT LIGHT
In the Ambient light menu you can set the colour and brightness for your ambient lighting. Using the Link zones function, the ambience, accent and impression zones can be regulated separately so that you can set the lighting of your vehicle individually.

Information about smartphone integration

Using the Smartphone Integration menu, various applications are available that can bring the functions of your mobile phone to the multimedia system display. Operation can by carried out via the touchscreen or voice control, for example.

Only one mobile phone at a time can be connected via Smartphone Integration to the multimedia system. Also for use with two phone mode with Smartphone Integration, only one additional mobile phone can be connected using Bluetooth® with the multimedia system.

Use Android Auto for mobile phones with the Android operating system and use Apple CarPlay® with your iPhone®. The full functionality of Android Auto and Apple CarPlay® is only possible with an Internet connection.

Information about vehicle info

You can have important vehicle information displayed in the Info menu. At a glance you will have an overview of vehicle and engine data or current consumption values, for example. In addition, you can call up the Digital Owner's Manual via the Owner's Manual menu item.

VEHICLE DATA
THE FOLLOWING DATA WILL BE SHOWN, FOR EXAMPLE:

- Activity of the acceleration and brake pedal
- Activity of the suspension strut
- Wheel angle
- G-force display for the linear and lateral acceleration

ENGINE DATA
THE FOLLOWING DATA IS SHOWN:

- Transmission oil temperature
- Engine/coolant temperature
- Performance
- Torque
- Boost pressure

CONSUMPTION DATA
Depending on your driving style, this display shows the current and average fuel consumption. Together with the displays of vehicle and engine data, you can adapt your driving style to be as efficient and economical as possible.

Information about In-Car Office

Using the In-Car Office menu you can connect your online services with the multimedia system.

YOU THEN HAVE MULTIPLE OPTIONS AVAILABLE:

- Organising your meetings and telephone conferences.

- Managing your e-mails and appointments.
- Receive route guidance to the location of a meeting.

Information on MB Apps (Digital Extras)

VARIOUS SERVICES AND ONLINE FUNCTIONS ARE AVAILABLE VIA THE MB APPS MENU:

- Managing Digital Extras
- Using the dashcam
- Using the web browser to surf the Internet

You require a Mercedes me ID user account, and have to connect your vehicle with the user account, in order to be able to use services.

ⓘ If the Mercedes-Benz App is available on a mobile phone, the vehicle link can be made via the displayed QR code.

Please not that the available features are country-dependent.

Information on settings

In the Settings you can set the basic configuration for your multimedia system and the vehicle. You have access to all functions in this menu, from switching the driver assistance systems on and off to display and language settings.

THE SETTINGS ARE STRUCTURED IN THE FOLLOWING MENUS:

- Assistance
- Vehicle
- Lights
- System

ASSISTANCE MENU
With the Assistance menu you have direct access to the driver assistance systems which are installed in your vehicle and can either switch these on or off, or configure according to your wishes.

VEHICLE MENU
HERE YOU CAN ACTIVATE THE FOLLOWING FUNCTIONS, FOR EXAMPLE:

- Automatic folding in of the outside mirrors when parking the vehicle
- Automatic adjustment of the seat and steering wheel, for comfortable entry and exit from the vehicle
- Automatic activation of the 360° camera when selecting reverse gear

LIGHT MENU
All the light settings can be carried out in the Lights menu. You can activate or deactivate the Intelligent Light System here, set for how long your vehicle should remain lit after parking or unlocking or switch the function off.

SYSTEM MENU
All important settings for the multimedia system can be carried out in the System menu.

YOU CAN CARRY OUT THE FOLLOWING SETTINGS, FOR EXAMPLE:

- Setting the system language
- The configuration of Wi-Fi and Bluetooth®
- Setting of time and date

At the filling station

Topping up the windscreen washer system

DANGER
Risk of fatal injuries when carrying out maintenance work during the charging process

During the charging process, the high-voltage on-board electrical system is under high voltage.

► Do not perform any maintenance work during the charging process.

WARNING
Risk of injury due to overheated vehicle

IF YOU OPEN THE BONNET IN THE EVENT OF AN OVERHEATED VEHICLE OR FIRE IN THE ENGINE COMPARTMENT, THE FOLLOWING SITUATIONS MAY OCCUR:

- You may come into contact with hot gases.
- You may come into contact with other escaping hot operating fluids.

► In the event of overheating or fire in the engine compartment, keep the bonnet closed and call the fire service.

► Allow the overheated vehicle to cool down first if you need to open the bonnet.

WARNING
Risk of injury due to moving parts

Components in the engine compartment may continue to run or start unexpectedly even when the drive system is switched off.

Observe the following if you must open the bonnet:

- Switch off the vehicle.
- Never touch the danger zones surrounding moving components, e.g. the rotation area of the fan.
- Remove jewellery and watches.
- Keep items of clothing and hair away from moving parts.

WARNING
Risk of burns from hot components in the engine compartment

Certain components in the engine compartment can be very hot, e.g. the drive system and the cooler.

- Allow the drive system to cool down and touch only the components described below.

WARNING
Risk of fire and injury from windscreen washer concentrate

Windscreen washer concentrate is highly flammable.

- Avoid fire, naked flames, smoking and the creation of sparks when using windscreen washer concentrate.

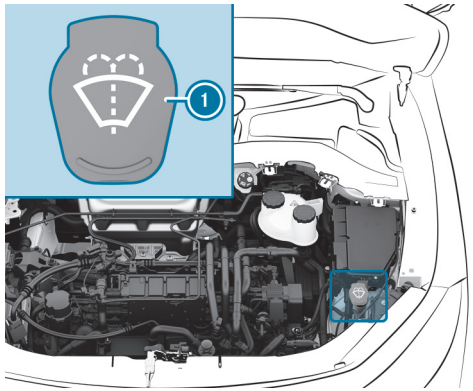

- Remove cap (1) by the tab.
- Top up the washer fluid.

Replacing the windscreen wiper blades

WARNING
Risk of becoming trapped if the windscreen wipers are switched on while wiper blades are being replaced

If the windscreen wipers begin to move while you are changing the wiper blades, you can be trapped by the wiper arm.

- Always switch off the windscreen wipers and vehicle before changing the wiper blades.

MOVING THE WIPER ARMS INTO THE REPLACEMENT POSITION

- Switch the vehicle on and then off again immediately.
- Within around 15 seconds, press and hold the button on the combination switch for approximately three seconds (⟶ page 270).

  The wiper arms will move into the replacement position.

Check the condition of the wiper blades regularly and replace them in the event of visible damage or ongoing smearing.

- Observe the information about the service indicator.

SERVICE INDICATOR

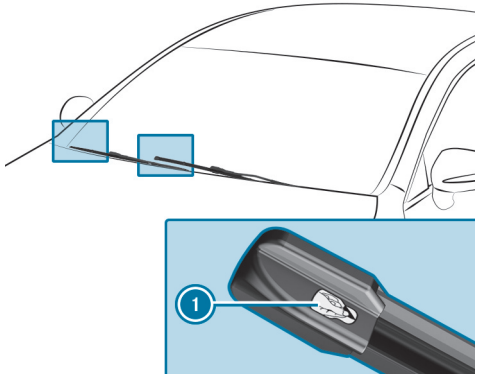

- Remove protective film (1) from the service indicators on the tips of the newly fitted wiper blades.

When the colour of the service indicator changes from black to yellow, replace the wiper blades.

The time it takes for the colour to change will vary depending on the usage conditions.

Information on washing the vehicle in a car wash

WARNING
Risk of an accident due to reduced braking power after washing the vehicle

Braking efficiency is reduced after washing the vehicle.

► After the vehicle has been washed, brake carefully while paying attention to the traffic conditions until braking power has been fully restored.

NOTE
Damage from automatic braking

THE VEHICLE WILL BRAKE AUTONOMOUSLY IN CERTAIN SITUATIONS IF THE FOLLOWING FUNCTIONS ARE SWITCHED ON:

- Active Brake Assist
- Active Distance Assist DISTRONIC
- HOLD function
- Active Parking Assist

To avoid damage to the vehicle, switch these systems off e.g. before towing it or in a car wash.

NOTE
Damage due to unsuitable car wash

► Before driving into a car wash make sure that the car wash is suitable for the vehicle dimensions.

► Ensure there is sufficient ground clearance between the underbody and the guide rails of the car wash.

► Ensure that the clearance width of the car wash, in particular the width of the guide rails, is sufficient.

TO AVOID DAMAGE TO YOUR VEHICLE WHEN USING A CAR WASH, ENSURE THE FOLLOWING BEFOREHAND:

- Active Distance Assist DISTRONIC is switched off.
- The HOLD function is switched off.
- The 360° camera or the reversing camera is switched off.
- The side windows and sliding sunroof are completely closed.
- The blower for the ventilation and heating is switched off.
- The windscreen wiper switch is in position 0.
- The key is at least 3 m away from the vehicle. Otherwise the tailgate could open unintentionally.
- For car washes with conveyor systems:
  - Neutral gear N is engaged.
  - If you leave the vehicle while it is being washed, ensure the key is located in the vehicle. The park position P is otherwise automatically engaged.

Removing the wax from the windscreen and the wiper rubber after washing the vehicle will help to avoid smearing and reduce wiper noise.

Preparing for a holiday

Notes on adjusting the lights when driving abroad

It is not necessary to adjust the headlamps. The legal requirements are also met in countries in which traffic drives on the other side of the road.

Notes on regularly inspecting wheels and tyres

WARNING
Risk of injury due to damaged tyres

Damaged tyres can cause tyre pressure loss.

► Check the tyres regularly for signs of damage and replace any damaged tyres immediately.

WARNING
Risk of aquaplaning due to insufficient tyre tread

Insufficient tyre tread will result in reduced tyre grip. There is a risk of an accident.

On a wet road surface the risk of aquaplaning is increased, in particular where speed is not adapted to suit the conditions.

► Check the tread depth and the condition of the tyre contact surface across the entire width of all tyres on a regular basis.

MINIMUM TREAD DEPTH FOR

- Summer tyres: 3 mm
- M+S tyres: 4 mm

► For safety reasons, replace the tyres before the legally-prescribed limit for the minimum tread depth is reached.

► Replace the tyres immediately if the legally-prescribed limit for the minimum tread depth is reached.

CARRY OUT THE FOLLOWING CHECKS ON ALL WHEELS REGULARLY, AT LEAST ONCE A MONTH OR AS REQUIRED, FOR EXAMPLE, PRIOR TO A LONG JOURNEY OR DRIVING OFF-ROAD:

- Check the tyre pressure (⟶ page 654).

- Visually inspect wheels and tyres for damage.
- Check the valve caps.
- Visual check of the tyre tread depth and the tyre contact surface across the entire width.

  The minimum tread depth for summer tyres is 3 mm and for winter tyres 4 mm.

Removing the safety vest

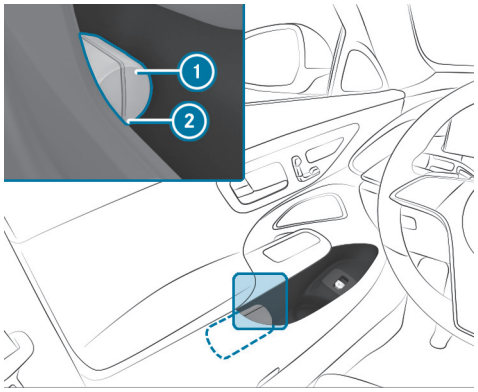

There is a safety vest stowage recess in the door stowage compartments of all doors for storing the safety vests.

► To remove: pull out the safety vest bag (1) using the loop (2).

► Open the safety vest bag (1) and take out the safety vest.
► To replace: fold the safety vest, roll it up and insert it into the safety vest bag (1).
► Slide the safety vest bag (1) along the underside of the armrest into the safety vest stowage recess. Ensure that the loop (2) remains hanging out so that it is easy to grasp.

ⓘ Remove the packaging film from a new safety vest before sliding it into the safety vest stowage recess. Otherwise, it may slide out unintentionally or the packaging may hinder its removal.
Observe the legal requirements for the individual countries.

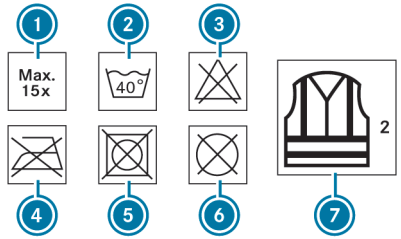

(1) Maximum number of washes
(2) Maximum wash temperature
(3) Do not bleach
(4) Do not iron
(5) Do not tumble dry
(6) Do not dry clean
(7) Class 2 safety vest

The requirements defined by the legal standard are only fulfilled if the safety vest is the correct size and is fully closed.

EXCHANGE THE SAFETY VEST IN THE FOLLOWING CASES:

- The reflective strips are damaged or dirty.
- The maximum permissible number of washes is exceeded.
- The fluorescence property decreases, e.g. due to permanent exposure to sunlight.

DISPOSE OF THE SAFETY VEST IN AN ENVIRONMENTALLY FRIENDLY WAY:

- Please contact your local waste disposal company.

Removing the warning triangle

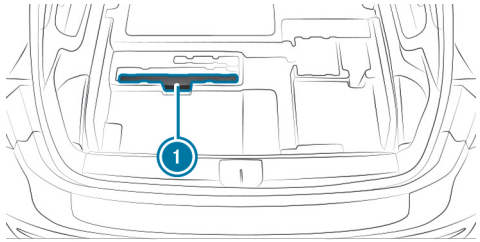

Vehicles with two seat rows

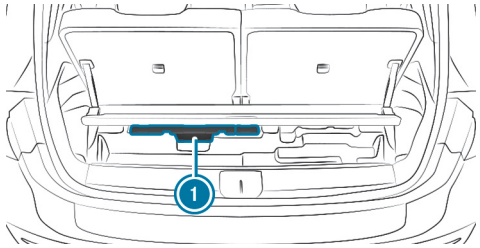

Vehicles with three seat rows

- ► Open the load compartment floor.
- ► Remove the warning triangle (1).

First-aid kit overview

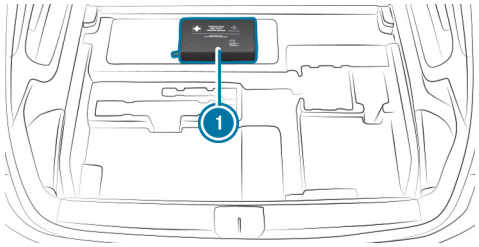

Vehicles with two seat rows

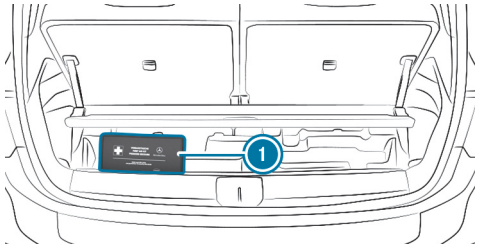

Vehicles with three seat rows

The first-aid kit (1) is located under the load compartment floor.

Map data update overview

As the content of a digital road map has a short life, outdated data may have a negative effect on all navigation functions. For the best MBUX navigation experience, you should install all of the map updates offered by Mercedes-Benz.

THE FOLLOWING OPTIONS ARE AVAILABLE FOR THE UPDATE OF MAP DATA:

- Online map update

- Updates via the Mercedes-Benz Portal
- Update at a Mercedes-Benz service centre
  Additional costs can be incurred in this process.

ONLINE MAP UPDATE
REQUIREMENTS:

- Digital Extras are available.
- You have a Mercedes me ID.
- The Digital Extra Online Map Update is available for your region.
- Online Map Update has been activated.

ⓘ Online Map Update is only available in certain countries.

Installation takes place in the background as an automatic map update.

The MBUX multimedia system installs all of the available map updates for the European regions in which the vehicle is located or is moved.

The online map update is activated at the latest after the next time the vehicle is switched on.

UPDATES VIA THE MERCEDES-BENZ PORTAL
The map data for several regions can also be updated manually. Log in with your Mercedes-Benz user account at: https://www.mercedes-benz.de/

Click on your account at the top right and follow the menu path My dashboard > Manage vehicle > Manage Digital Extras > Online Map Update. Select the regions to be downloaded to a storage medium.

After the map data has been copied, connect the storage medium with your vehicle. Select the notification with information about a new version of the map data and start the installation. After the MBUX multimedia system has been restarted, the updated map data is used.

Entering a POI or address

Requirements:

- **For the online search:**
  - There is an Internet connection.
  - Digital Extras are available.
  - You have created a Mercedes me ID.
  - The vehicle is linked to the Mercedes me ID and you have accepted the terms of use.
  - Further information can be found at: https://www.mercedes.me
  - The Digital Extra is available and has been activated.

ⓘ If Online Search is not available, the search is performed using the data of the digital map.

Multimedia system:

→ Navigation

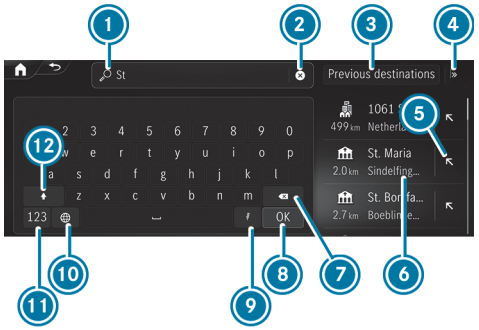

Example: entering a POI or address

(1) Input line with current entry
(2) Deletes an entry
(3) Selects previous destinations
(4) Displays and selects additional destination searches
(5) Adopts the search result in the input line and continues the search
(6) Search result
(7) Deletes the last character entered
(8) Hides the keypad
(9) Activates voice entry.
(10) Sets the written language
(11) Switches to digits and special characters
(12) Switches to upper-case or lower-case letters

If available, selecting the [🎤] symbol starts the MBUX Voice Assistant.

► Enter a destination. The entries can be made in any order.
The search results are displayed in a list.

ⓘ Online search results for POIs may contain additional information, for example opening times and ratings. The information is provided by an online map service.
This online function is not available in all countries.

THE FOLLOWING ENTRIES CAN BE MADE, FOR EXAMPLE IN (1):

- Town, street, house number or street, town
- Postcode
- POI name or POI category, e.g. Restaurants
- Town, POI name
- Contact name
- Geo-coordinates (→ page 496)

► Hide the keyboard with [OK].

► Select the destination in the list.
The following menu shows the selected destination with the address information and a corresponding map section.
The menu enables the route to be calculated.

Searching for radio stations using station names or frequency entry

Multimedia system:

→ Home » Radio

- Select [search].
- Enter a station name or frequency.
- Select a station.

Luggage and loading

Attaching a roof luggage rack

WARNING
Risk of accident due to exceeding the maximum roof load

The vehicle centre of gravity and the usual driving characteristics as well as the steering and braking characteristics alter.

If you exceed the maximum roof load, the driving characteristics, as well as steering and braking, will be greatly impaired.

- ► Never exceed the maximum roof load and adjust your driving style.

You will find information on the maximum roof load in the "Technical data" section.

NOTE
Vehicle damage due to failure to observe the maximum permissible clearance height

If the vehicle height exceeds the maximum permissible clearance height, the roof and other vehicle parts may be damaged.

- ► Please observe the indicated maximum clearance height.
- ► If the vehicle exceeds the permissible clearance height, do not drive in.
- ► Take the modified vehicle height in the case of roof superstructures or other carrier systems into account.

NOTE
Damage to the panorama sliding sunroof due to non-approved roof luggage racks

The panorama sliding sunroof may be damaged by the roof luggage rack if you attempt to open it when using a roof luggage rack not tested and approved for Mercedes-Benz.

► When a roof luggage rack is fitted, open the panorama sliding sunroof only if this has been tested and approved for Mercedes-Benz.

The panorama sliding sunroof may be raised to allow ventilation of the vehicle interior.

NOTES ON DRIVING WITH ROOF LOAD

- Distribute the roof load and vehicle load evenly, and place heavy objects at the bottom. Also observe the notes on loading the vehicle (⟶ page 232) .
- Drive carefully, avoiding abrupt starting, braking and steering as well as fast cornering.
- When transporting a roof load and with a fully laden or fully occupied vehicle, select one of the drive programs E and C. These are configured for good stability (⟶ page 303).

► Secure the roof luggage rack to the roof railing.

► Observe the manufacturer's installation instructions.

Folding the rear seat backrest forwards

WARNING
Risk of becoming trapped when adjusting the seats

When you adjust a seat, you may trap yourself or a vehicle occupant.

► When adjusting a seat, make sure that no one has any body parts in the sweep of the seat.

WARNING
Risk of becoming trapped if the seat is not engaged

The seat does not engage when folded forwards. The seat can fold backwards unexpectedly, e.g. when accelerating, braking or in the event of an abrupt change of direction or an accident.

People in the seat's sweep can become trapped.

► If a seat is folded forwards, always fold it back before driving off.

► Make sure that the seat is engaged.

WARNING
Risk of injury due to seat backrests folded forwards

If the seat backrest of the rear seat is folded forwards, persons in the third row of seats may hit parts of the seat mechanism, especially in the event of an accident, braking manoeuvre or abrupt change of direction.

- ► If there is a person in the third row of seats, the rear seat in front of them must be folded back to the driving position before the journey begins.
- ► Persons in the third row of seats should not rest their legs on a seat backrest that has been folded forwards.

Always ensure that all vehicle occupants have their seat belts fastened correctly and are sitting properly. Particular attention must be paid to children.

If you no longer require the folded-down seat backrest as a loading area, fold the backrest back into place.

Requirements

- The area into which the seat is folded is clear.
- The area under the rear bench seat is clear.
- The armrest on the second row of seats is folded back and the cup holders are empty.

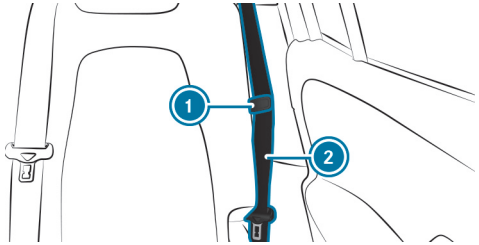

► Clamp the seat belt strap on seat belt (2) in seat belt strap holder (1).

When the left-hand seat backrest is folded forwards, the centre seat backrest will also be folded forwards.

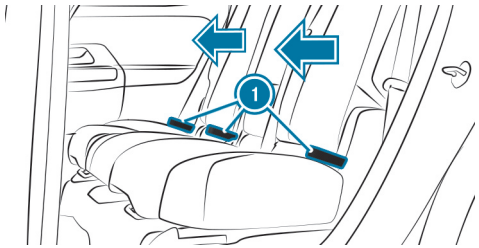

► Move the driver's or front passenger seat forwards, if necessary.

► If necessary, release the head restraints for the seat backrest and push them down (⟶ page 219).

► **Left and right seat backrests:** pull one of release loops (1).
The seat backrest will automatically fold forwards.

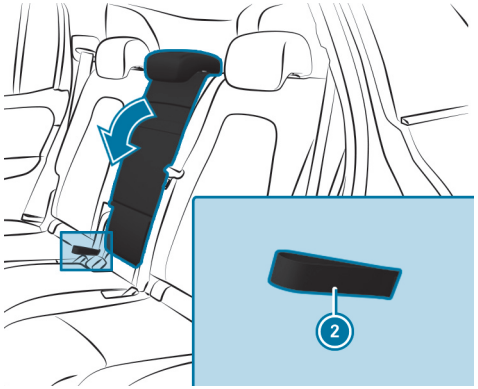

► **Centre seat backrest:** pull release loop (2).

The seat backrest will automatically fold forwards.

ⓘ When the seat backrests on the second and third rows of seats are folded forwards, you can push the rear bench seat on the second row of seats back. This will then provide a continuous load compartment surface. Ensure that the area between the rows of seats is clear.

Folding back the rear seat backrest

WARNING
Risk of becoming trapped when adjusting the seats

When you adjust a seat, you may trap yourself or a vehicle occupant.

► When adjusting a seat, make sure that no one has any body parts in the sweep of the seat.

WARNING
Risk of accident if the rear bench seat, rear seat and seat backrest are not engaged

The rear bench seat, rear seat and seat backrest may fold forwards, even while the vehicle is in motion.

- As a result, the vehicle occupant will be pressed into the seat belt with increased force. The seat belt will not be able to protect as intended and could cause additional injury.
- Objects or loads in the boot or load compartment cannot be restrained by the seat backrest.

► Make sure that the rear bench seat, the rear seat and the seat backrest are engaged before every trip.

If the rear seat backrest is not engaged and locked in place, the red lock verification indicator will be visible.

NOTE
Damage caused by trapping the seat belt when folding back the seat backrest

The seat belt could become trapped and thus be damaged when the seat backrest is folded back.

► Make sure that the seat belt is not trapped when folding back the seat backrest.

If the left and centre seat backrests have been folded forwards together, fold the left seat backrest back first.

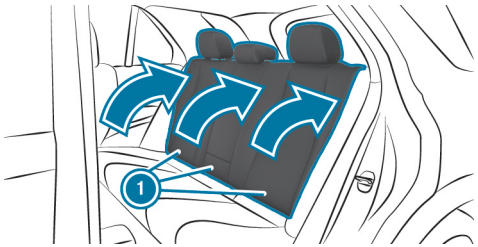

- Move the driver's or front passenger seat forwards, if necessary.
- Swivel seat backrest (1) back until it engages.
  The seat backrest will remain in the cargo position.
- After the seat backrest has been folded back, check the position of the head restraint and set it to the correct position (⟶ page 219).

Opening or closing the stowage space under the load compartment floor

WARNING
Risk of injury due to an open load compartment floor

If you drive with the load compartment floor open, objects could be flung around and hit vehicle occupants as a result. There is a risk of injury, particularly in the event of sudden braking or a sudden change in direction.

- Always close the load compartment floor before a journey.

OPENING

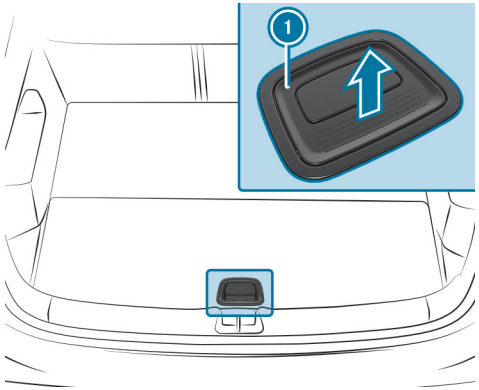

- Pull handle (1) upwards.
- Lift the load compartment floor up using handle (1).

CLOSING

- Fold the load compartment floor down and then press handle (1) down until it engages.

Folding the ball neck in and out

WARNING
Risk of accident due to the ball neck not being engaged

If the ball neck is not engaged, the trailer may come loose.

- Always engage the ball neck as described.

WARNING
Risk of injury from ball neck swinging outwards

The ball neck may swing outwards when unlocking or when it has not been properly engaged.

There is a risk of injury within the ball neck's range of movement!

- ► Unlock the ball neck only when its range of movement is unobstructed.
- ► Always be sure the ball neck is engaged when folding inwards.

NOTE
Increased risk of damage to property due to folded-out ball neck

- ► When the trailer is not coupled or the bicycle rack is attached, fold in the ball neck or, in the case of a fully electric trailer hitch, retract the ball neck.

NOTE
Damage to the vehicle due to incorrect use of the trailer hitch

If a trailer hitch is used to recover the vehicle, the vehicle or the trailer hitch itself may be damaged in the process.

- ► Use the trailer hitch only for pulling a trailer or attaching approved carrier systems (e.g. a bicycle rack).

  Exception: Since vehicles with a trailer hitch do not have a fixture for a towing eye at the rear, towing or tow-starting is permitted.
- ► When towing or tow-starting with the trailer hitch, observe the information in the section "Fitting and removing the towing eye."

FOLDING OUT THE BALL NECK

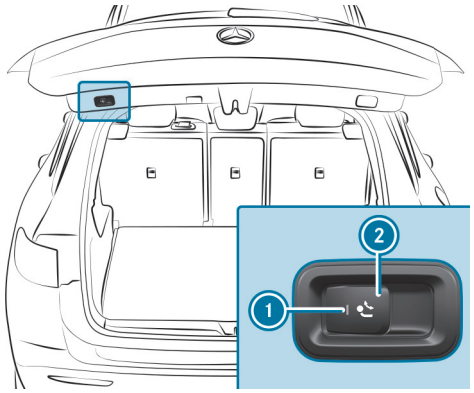

- ► Secure the vehicle against rolling away.
- ► Keep the swivel range clear.

- Pull the button (2) until the ball neck unlocks.
  The ball neck folds out from under the rear bumper.
  The indicator lamp (1) starts flashing.

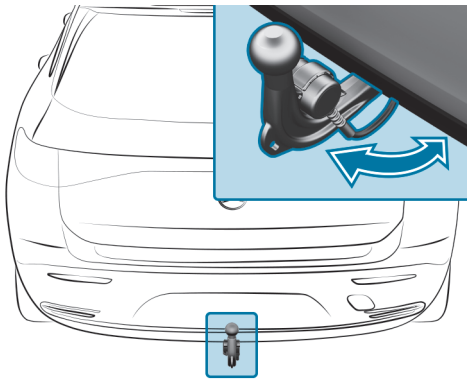

- Pull the ball neck in the direction indicated by the arrow until it engages audibly in a vertical position.
  The indicator lamp (1) on the ball neck release button goes out.
  If the ball neck is not securely locked in place, the Trailer coupling Check lock display message will appear on the driver display.
- Remove the cover cap from the ball head and store it in a safe place.

Ensure that the ball on the ball neck is clean. Check that it is either greased or dry (grease-free) in accordance with the instructions for the trailer.

FOLDING IN THE BALL NECK

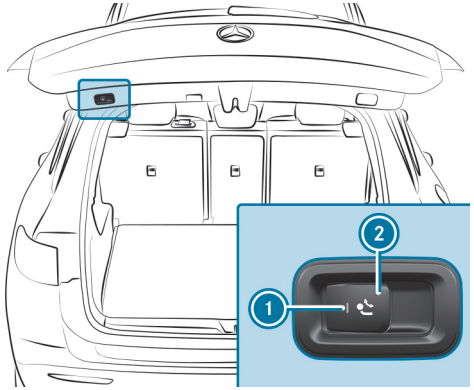

- Secure the vehicle against rolling away.
- Remove the trailer cable or adapter plug.
- Pull the button (2) until the ball neck unlocks.
  The ball neck folds up under the rear bumper.
  The indicator lamp (1) starts flashing.

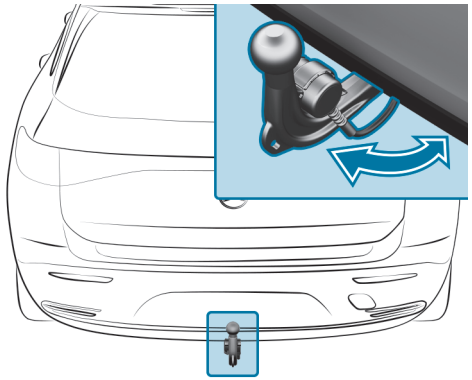

- Push the ball neck in the direction indicated by the arrow until it engages audibly behind the bumper.

  The indicator lamp (1) goes out and the message on the driver display disappears.

OBSERVE THE INFORMATION ON INDICATORS ON THE DRIVER DISPLAY:

- Indicator lamps and warning lamps (⟶ page 805)
- Display messages (⟶ page 750)

Overview of the tie-down eyes

Observe the notes on loading the vehicle (⟶ page 232).

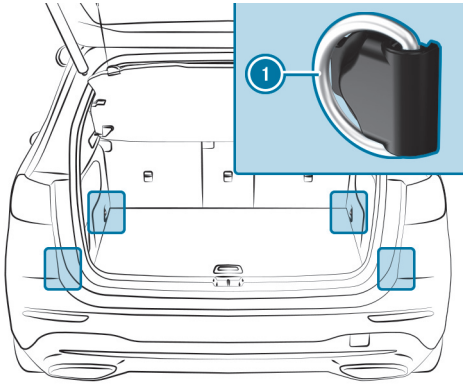

(1) Tie-down eyes (vehicles with through-loading feature in the rear bench seat)

Overview of the front storage compartments

WARNING
Risk of injury due to objects being stowed incorrectly

If objects in the vehicle interior are stowed incorrectly, they may slide or be thrown around and hit vehicle occupants. In addition, cup holders, open stowage spaces and mobile phone receptacles will not always be able to retain all objects that they contain in the event of an accident.

There is a risk of injury, particularly in the event of sudden braking or a sudden change in direction.

- Always stow objects such that they cannot be thrown around in such situations.
- Always make sure that objects do not protrude from stowage spaces, luggage nets or stowage nets.
- Close the lockable stowage spaces before starting a journey.
- Always stow and secure heavy, hard, pointed, sharp-edged, fragile or bulky objects in the boot/load compartment.

Observe the information on loading the vehicle.

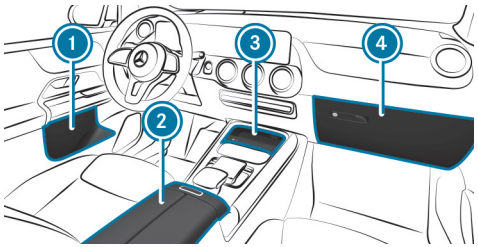

1. Stowage spaces in the doors
2. Storage compartment in the armrest with a multimedia and USB connection
   Depending on the vehicle's equipment, there may be a 12 V socket in the storage compartment
3. Storage compartment in the front centre console with a USB port
4. Glove compartment

Locking/unlocking the glove compartment

WARNING
Risk of injury due to objects being stowed incorrectly

If objects in the vehicle interior are stowed incorrectly, they can slide or be thrown around and hit vehicle occupants. In addition, cup holders, open stowage spaces and mobile phone brackets cannot always retain all objects they contain.

There is a risk of injury, particularly in the event of sudden braking or a sudden change in direction.

- ► Always stow objects in such a way that they cannot be thrown around in such situations.
- ► Always make sure that objects do not protrude from stowage spaces, luggage nets or stowage nets.
- ► Close the lockable stowage spaces before starting a journey.
- ► Always stow and secure heavy, hard, pointed, sharp-edged, fragile or bulky objects in the boot.

Observe the notes on loading the vehicle.

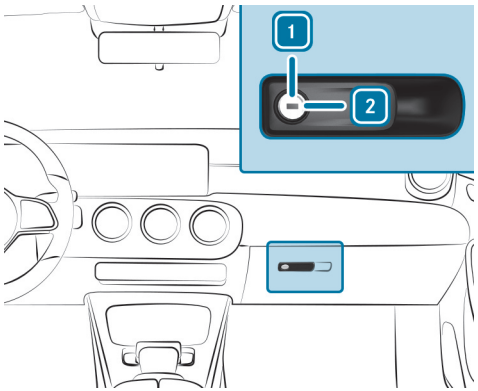

- Turn the emergency key a quarter turn clockwise [2] (to lock) or anti-clockwise [1] (to unlock).

Ice and snow

Notes on regularly inspecting wheels and tyres

WARNING
Risk of injury due to damaged tyres

Damaged tyres can cause tyre pressure loss.

► Check the tyres regularly for signs of damage and replace any damaged tyres immediately.

WARNING
Risk of aquaplaning due to insufficient tyre tread

Insufficient tyre tread will result in reduced tyre grip. There is a risk of an accident.

On a wet road surface the risk of aquaplaning is increased, in particular where speed is not adapted to suit the conditions.

► Check the tread depth and the condition of the tyre contact surface across the entire width of all tyres on a regular basis.

MINIMUM TREAD DEPTH FOR

- Summer tyres: 3 mm
- M+S tyres: 4 mm

► For safety reasons, replace the tyres before the legally-prescribed limit for the minimum tread depth is reached.

► Replace the tyres immediately if the legally-prescribed limit for the minimum tread depth is reached.

CARRY OUT THE FOLLOWING CHECKS ON ALL WHEELS REGULARLY, AT LEAST ONCE A MONTH OR AS REQUIRED, FOR EXAMPLE, PRIOR TO A LONG JOURNEY OR DRIVING OFF-ROAD:

- Check the tyre pressure (⟶ page 654).

- Visually inspect wheels and tyres for damage.
- Check the valve caps.
- Visual check of the tyre tread depth and the tyre contact surface across the entire width.

  The minimum tread depth for summer tyres is 3 mm and for winter tyres 4 mm.

Setting the speed limit for winter tyres

Multimedia system:

Settings » Vehicle » Driving » Winter tyre limit

► Activate or deactivate Winter tyre limit.

SETTING A SPEED

► Select Winter tyre limit.

► Select a speed.

Notes on snow chains

WARNING
Risk of accident due to incorrectly fitted snow chains

If you have fitted snow chains to the rear wheels, they may drag against the vehicle body or chassis components.

► Never fit snow chains on the rear wheels.

► Only fit snow chains on the front wheels in pairs.

NOTE
Damage to vehicle body or suspension components caused by fitted snow chains

On 4MATIC vehicles, if you fit snow chains on the rear wheels, you can damage vehicle body or suspension components.

► On 4MATIC vehicles, only fit snow chains on the front wheels.

OBSERVE THE FOLLOWING NOTES WHEN USING SNOW CHAINS:

- Snow chains are only permissible for certain wheel/tyre combinations. You can obtain information about this from a Mercedes-Benz Service Centre.
- For safety reasons, only use snow chains that have been specifically approved for your vehicle by Mercedes-Benz, or snow chains of the same quality standard.
- If snow chains are fitted, the maximum permissible speed is 50 km/h.
- **Vehicles with Active Parking Assist:** Do not use Active Parking Assist when snow chains are fitted.

You can permanently limit the speed for driving with winter tyres (→ page 360).

You can deactivate ESP® to start off (→ page 353). This allows the wheels to spin, achieving increased tractive power.

Notes on windscreen washer fluid

Observe the notes on operating fluids (⟶ page 739).

WARNING
Risk of fire and injury from windscreen washer concentrate

Windscreen washer concentrate is highly flammable. If it comes into contact with hot components, it may ignite.

► Make sure that windscreen washer concentrate is not spilled near to the filler opening.

NOTE
Damage to the exterior lighting due to unsuitable windscreen washer fluid

Unsuitable windscreen washer fluids may damage the plastic surface of the exterior lighting.

► Only use windscreen washer fluids which are also suitable for use on plastic surfaces, e.g. MB SummerFit or MB WinterFit.

NOTE
Blocked spray nozzles caused by mixing windscreen washer fluids

► Do not mix MB SummerFit and MB WinterFit with other windscreen washer fluids.

Do not use distilled or de-ionised water. Otherwise, the fill level sensor may be triggered erroneously.

RECOMMENDED WINDSCREEN WASHER FLUID:

- above freezing point: e.g. MB SummerFit
- below freezing point: e.g. MB WinterFit

For the correct mixing ratio, refer to the information on the antifreeze container.

Mix washer fluid with windscreen washer fluid all year round.

Topping up the windscreen washer system

DANGER
Risk of fatal injuries when carrying out maintenance work during the charging process

During the charging process, the high-voltage on-board electrical system is under high voltage.

► Do not perform any maintenance work during the charging process.

WARNING
Risk of injury due to overheated vehicle

IF YOU OPEN THE BONNET IN THE EVENT OF AN OVERHEATED VEHICLE OR FIRE IN THE ENGINE COMPARTMENT, THE FOLLOWING SITUATIONS MAY OCCUR:

- You may come into contact with hot gases.
- You may come into contact with other escaping hot operating fluids.

► In the event of overheating or fire in the engine compartment, keep the bonnet closed and call the fire service.

► Allow the overheated vehicle to cool down first if you need to open the bonnet.

WARNING
Risk of injury due to moving parts

Components in the engine compartment may continue to run or start unexpectedly even when the drive system is switched off.

Observe the following if you must open the bonnet:

► Switch off the vehicle.

► Never touch the danger zones surrounding moving components, e.g. the rotation area of the fan.

► Remove jewellery and watches.

► Keep items of clothing and hair away from moving parts.

WARNING
Risk of burns from hot components in the engine compartment

Certain components in the engine compartment can be very hot, e.g. the drive system and the cooler.

► Allow the drive system to cool down and touch only the components described below.

WARNING
Risk of fire and injury from windscreen washer concentrate

Windscreen washer concentrate is highly flammable.

► Avoid fire, naked flames, smoking and the creation of sparks when using windscreen washer concentrate.

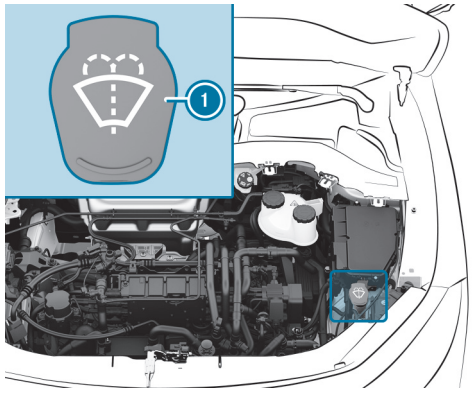

► Remove cap (1) by the tab.

► Top up the washer fluid.

Replacing the windscreen wiper blades

WARNING
Risk of becoming trapped if the windscreen wipers are switched on while wiper blades are being replaced

If the windscreen wipers begin to move while you are changing the wiper blades, you can be trapped by the wiper arm.

- Always switch off the windscreen wipers and vehicle before changing the wiper blades.

MOVING THE WIPER ARMS INTO THE REPLACEMENT POSITION

- Switch the vehicle on and then off again immediately.
- Within around 15 seconds, press and hold the button on the combination switch for approximately three seconds (⟶ page 270).

  The wiper arms will move into the replacement position.

Check the condition of the wiper blades regularly and replace them in the event of visible damage or ongoing smearing.

- Observe the information about the service indicator.

SERVICE INDICATOR

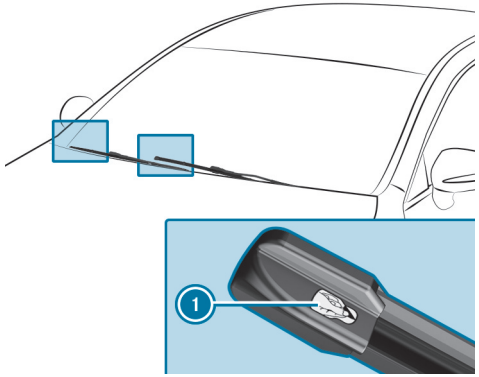

- Remove protective film (1) from the service indicators on the tips of the newly fitted wiper blades.

When the colour of the service indicator changes from black to yellow, replace the wiper blades.

The time it takes for the colour to change will vary depending on the usage conditions.

Help in the event of a breakdown

Activating/deactivating the hazard warning lights

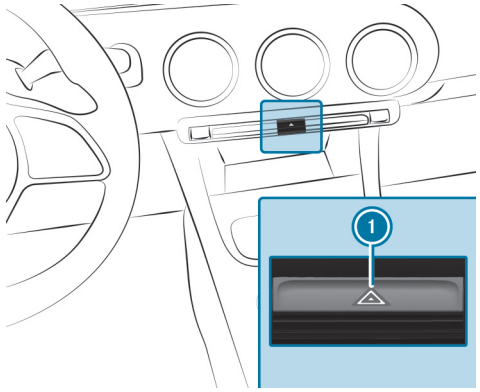

► Press button (1).

IN THE FOLLOWING SITUATIONS, THE HAZARD WARNING LIGHTS WILL SWITCH ON AUTOMATICALLY:

- The airbag has been deployed
- the vehicle brakes are applied heavily from a speed of more than 70 km/h to a standstill.
- An emergency stop has been initiated (⟶ page 373)

When you pull away again, the hazard warning light system will switch off automatically at approximately 10 km/h. You can also switch off the hazard warning light system using button (1).

Removing the fire extinguisher

WARNING
Risk of accident due to an incorrectly secured fire extinguisher in the driver's footwell

A fire extinguisher may impede pedal travel or block a depressed pedal.

This jeopardises the operating and road safety of the vehicle.

The fire extinguisher can be flung around and injure the driver or other vehicle occupants.

► Always store and secure the fire extinguisher in the bracket.

► Do not remove the fire extinguisher while driving.

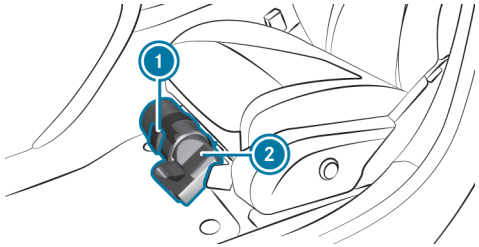

► Pull the tab (1) upwards.

► Fold the tab (1) down.

► Remove the fire extinguisher (2).

Removing the safety vest

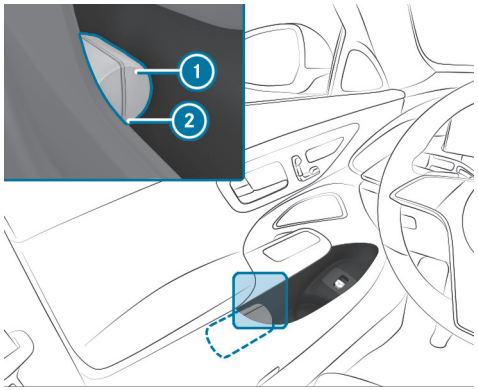

There is a safety vest stowage recess in the door stowage compartments of all doors for storing the safety vests.

► To remove: pull out the safety vest bag (1) using the loop (2).

► Open the safety vest bag (1) and take out the safety vest.
► To replace: fold the safety vest, roll it up and insert it into the safety vest bag (1).
► Slide the safety vest bag (1) along the underside of the armrest into the safety vest stowage recess. Ensure that the loop (2) remains hanging out so that it is easy to grasp.

ⓘ Remove the packaging film from a new safety vest before sliding it into the safety vest stowage recess. Otherwise, it may slide out unintentionally or the packaging may hinder its removal.
Observe the legal requirements for the individual countries.

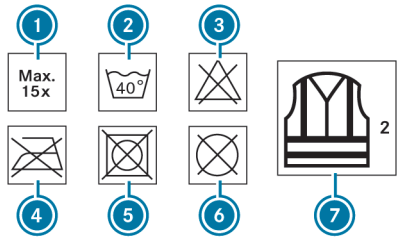

(1) Maximum number of washes
(2) Maximum wash temperature
(3) Do not bleach
(4) Do not iron
(5) Do not tumble dry
(6) Do not dry clean
(7) Class 2 safety vest

The requirements defined by the legal standard are only fulfilled if the safety vest is the correct size and is fully closed.

EXCHANGE THE SAFETY VEST IN THE FOLLOWING CASES:

- The reflective strips are damaged or dirty.
- The maximum permissible number of washes is exceeded.
- The fluorescence property decreases, e.g. due to permanent exposure to sunlight.

DISPOSE OF THE SAFETY VEST IN AN ENVIRONMENTALLY FRIENDLY WAY:

- Please contact your local waste disposal company.

Removing the warning triangle

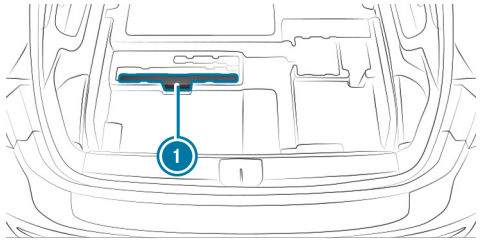

Vehicles with two seat rows

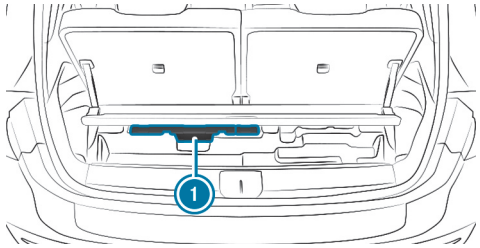

Vehicles with three seat rows

- ► Open the load compartment floor.
- ► Remove the warning triangle (1).

First-aid kit overview

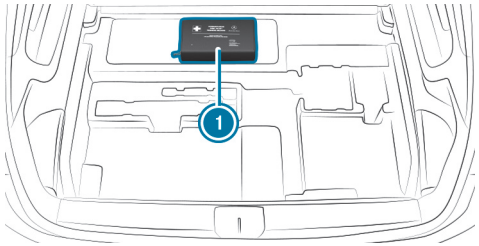

Vehicles with two seat rows

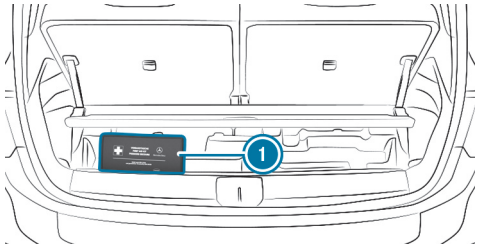

Vehicles with three seat rows

The first-aid kit (1) is located under the load compartment floor.

QR code for rescue card

QR codes are attached in the socket flap and on the opposite side on the B-pillar. In the event of an accident, rescue services can use the QR code to quickly find the appropriate rescue card for your vehicle. The current rescue card contains the most important information about your vehicle (e.g. the routing of the electric lines) in compact form.

You can find further information at: https://rk.mb-qr.com/de/

Starting assistance and charging the 12-V-battery

- Only have starting assistance provided by a qualified specialist workshop, e.g. a Mercedes-Benz Service Centre.
- Only have the battery charged at a qualified specialist workshop, e.g. a Mercedes-Benz Service Centre.

Notes on electrical fuses

WARNING
Risk of accident and injury due to overloaded lines

If you manipulate or bridge a faulty fuse or if you replace it with a fuse with a higher amperage, the electric line could be overloaded.

This could result in a fire.

- Always replace faulty fuses with specified new fuses containing the correct amperage.

NOTE
Damage due to incorrect fuses

Using incorrect fuses can result in damage to electrical components or systems or their functions being considerably restricted.

- Use only fuses approved for Mercedes-Benz with the respective specified fuse rating.

Replace blown fuses with equivalent fuses, identifiable by their colour and label. The fuse ratings and further information to be observed can be found in the fuse assignment diagram.

Fuse assignment diagram: on the fuse box in the engine compartment (⟶ page 646).

NOTE
Damage or malfunctions caused by moisture

Moisture may cause damage to the electrical system or cause it to malfunction.

- When the fuse box is open, make sure that no moisture can enter the fuse box.
- When closing the fuse box, make sure that the seal of the lid is positioned correctly on the fuse box.

If the newly inserted fuse also blows, have the cause determined and rectified at a qualified specialist workshop.

ENSURE THE FOLLOWING BEFORE REPLACING A FUSE:

- The vehicle is secured against rolling away.
- All electrical consumers are switched off.
- The vehicle is switched off.

THE ELECTRICAL FUSES ARE LOCATED IN VARIOUS FUSE BOXES:

- Fuse box in the engine compartment on the left-hand side of the vehicle, when viewed in the direction of travel (⟶ page 646)
- Fuse box in the front passenger footwell (⟶ page 647)

- Fuse box in the centre of the load compartment (⟶ page 648)

Notes on flat tyres

WARNING
Risk of accident due to a flat tyre

A flat tyre severely affects the driving characteristics as well as steering and braking.

tyres that do not feature run-flat characteristics:

- ► Do not drive on with a flat tyre.
- ► Change the flat tyre immediately with an emergency spare wheel or spare wheel. Alternatively, consult a qualified specialist workshop.

Run-flat tyres:

- ► Observe the information and warning notes on MOExtended tyres (run-flat tyres).

IN THE EVENT OF A FLAT TYRE, THE FOLLOWING OPTIONS ARE AVAILABLE DEPENDING ON YOUR VEHICLE'S EQUIPMENT:

- **Vehicles with MOExtended tyres:** it is possible to continue the journey for a short period of time. Make sure you observe the notes on MOExtended tyres (run-flat tyres) (⟶ page 627).
- **Vehicles with a TIREFIT kit:** you can seal the tyre so that it is possible to continue the journey for a short period of time. To do this, use the TIREFIT kit (⟶ page 628).
- **Vehicles with Mercedes-Benz Support:** in the event of a breakdown, you can make a breakdown call via the overhead control panel (⟶ page 559).
- **All vehicles:** change the wheel (⟶ page 663).

ⓘ The emergency spare wheel is only available in certain countries (⟶ page 668).

Overview of the tyre-change tool kit

With the exception of some country-specific variants, vehicles are not equipped with a tyre-change tool kit. For more information on which tyre-changing tools are required and approved for performing a wheel change on your vehicle, consult a qualified specialist workshop.

YOU REQUIRE THE FOLLOWING TOOLS, FOREXAMPLE, TO CHANGE A WHEEL:

- Jack
- Chock
- Wheel wrench
- Centring pin

ⓘ The jack weighs approximately 3.4 kg.
The maximum load capacity of the jack can be found on the sticker affixed to the jack.
The jack is maintenance-free. In the event of a malfunction, please contact a qualified specialist workshop.

The tyre-change tool kit is located in the tool bag (1) in the load compartment.

When stowing the tool bag, ensure that it is adequately secured.

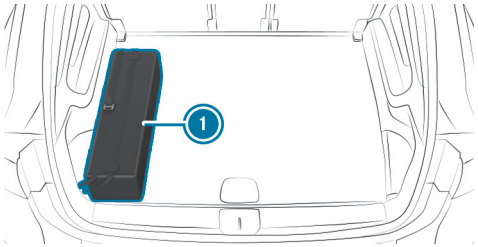

Vehicles with two seat rows

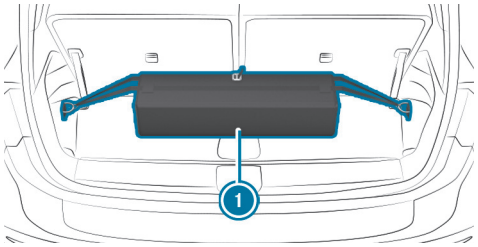

Vehicles with three seat rows

THE TOOL BAG CONTAINS:

- Jack
- Gloves
- Wheel wrench
- Centring pin
- Folding chock
- Ratchet wrench for jack

TIREFIT kit storage location

The TIREFIT kit is located under the load compartment floor.

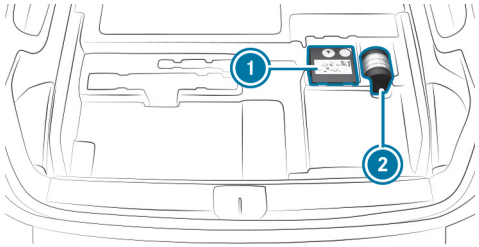

Vehicles with two rows of seats

(1) Tyre inflation compressor
(2) Tyre sealant bottle

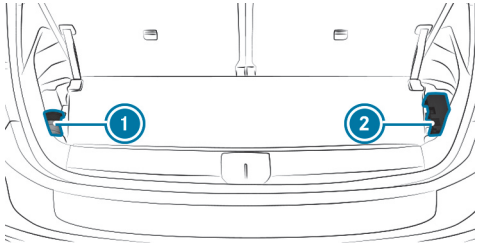

Vehicles with three rows of seats

(1) Tyre sealant bottle
(2) Tyre inflation compressor

Depending on the vehicle version, the TIREFIT kit may be located in other positions in the load compartment.

YOU CAN FIND INFORMATION ON THE POWER CATEGORY (LK) AND/OR ELECTRICAL DATA ON THE BACK OF THE TYRE INFLATION COMPRESSOR:

- LK2 – 12 V/15 A, 180 W, 0.8 kg

AT A DISTANCE OF APPROXIMATELY 1 M TO THE TYRE INFLATION COMPRESSOR AND APPROXIMATELY 1.6 M ABOVE THE GROUND, THE FOLLOWING SOUND PRESSURE LEVELS APPLY:

- Emission sound pressure level L_{PA} 83 dB (A)
- Sound power level L_{WA} 91 dB (A)

The tyre inflation compressor is maintenance-free. If there is a malfunction, please contact a qualified specialist workshop.

Towing the vehicle with both axles on the ground

► Observe the notes on the permitted towing methods (⟶ page 639).

► Make sure that the 12 V battery is connected and charged.

OBSERVE THE FOLLOWING POINTS WHEN THE 12 V BATTERY IS DISCONNECTED OR DISCHARGED:

- The drive system cannot be started.
- The electric parking brake cannot be released or applied.
- The selector lever cannot be put into position N or P.

IF AT LEAST ONE OF THE FOLLOWING CONDITIONS APPLIES, TRANSPORTING THE VEHICLE IS THE ONLY POSSIBLE OPTION:

- If the high-voltage battery is discharged.
- If the selector lever cannot be put into position N.
- If the 12 V battery is disconnected or discharged.
- If the driver display has failed.
- If the Towing not permitted See Owner's Manual display message is shown.

  Exception: if the vehicle is located in a danger zone, it can be recovered from the danger zone despite the display message.

  It must not be towed further than 100 m with both axles on the ground. A towing speed of 10 km/h must not be exceeded. Beyond these limits, only transporting is permitted.

- If the Top up coolant See Owner's Manual display message is shown.
- If the Stop Switch off the vehicle display message is shown.

► In such cases, transport the vehicle (⟶ page 642).

NOTE
Damage due to towing away at excessively high speeds or over long distances

The drivetrain could be damaged when towing at excessively high speeds or over long distances.

► A towing speed of 50 km/h must not be exceeded.

► A towing distance of 50 km must not be exceeded.

WARNING
Risk of accident when towing a vehicle with too much weight

IF THE VEHICLE TO BE TOWED IS HEAVIER THAN THE PERMISSIBLE GROSS MASS OF YOUR VEHICLE, THE FOLLOWING SITUATIONS CAN ARISE:

- The towing eye breaks off.
- The combination oscillates and can capsize.

► Before towing, check whether the vehicle to be towed exceeds the permissible gross mass.

If a vehicle is to be towed away, its permissible gross mass must not exceed the permissible gross mass of the towing vehicle.

► Information on the permissible gross mass of the vehicle can be found on the vehicle identification plate (⟶ page 737).

TOWING THE VEHICLE

► Fit the towing eye (⟶ page 643).

► Fasten the towing device.

NOTE
Damage due to incorrect connection of the tow bar

► Only connect the tow rope or tow bar to the towing eyes.

► Deactivate the automatic locking mechanism (⟶ page 177).

► Do not activate the HOLD function (⟶ page 354).

► Deactivate tow-away protection (⟶ page 200).

► Deactivate Active Brake Assist (⟶ page 378).

► Put the selector lever into position N.

► Release the electric parking brake.

► Remain in the cockpit during towing and observe the display messages.

► Do not switch off the vehicle while it is being towed.

► Do not open the driver's door or front passenger door, because otherwise the selector lever automatically switches to position P.

WARNING
Risk of accident due to limited safety-related functions during the towing process

SAFETY-RELATED FUNCTIONS ARE LIMITED OR NO LONGER AVAILABLE IN THE FOLLOWING SITUATIONS:

- the vehicle is switched off.
- the brake system or power steering system is malfunctioning.
- the energy supply or the on-board electrical system is malfunctioning.

► In such cases, do not tow the vehicle.

► Transport the vehicle (⟶ page 642).

NOTE
Damage to the drive system due to incorrect towing

THE VEHICLE MUST NOT BE TOWED IN THE FOLLOWING SITUATIONS:

- The vehicle is switched off.
- The brake system or the power steering is faulty.
- The power supply or the on-board electrical system is faulty.

► Do not tow the vehicle in these situations.

NOTE
Damage due to excessive tractive power

If you pull away sharply, the tractive power may be too high and the vehicles could be damaged.

► Pull away slowly and smoothly.

Expert knowledge

Additional functions of buttons

OPENING AND CLOSING THE WINDOWS USING THE AIR-RECIRCULATION BUTTON (CONVENIENCE CLOSING/OPENING)

When air-recirculation mode is activated, the side windows close automatically, for example, before entering a tunnel. When the air-recirculation mode is deactivated, the side windows move back to their original position.

WARNING
Risk of entrapment due to not paying attention during convenience closing

When the convenience closing feature is operating, parts of the body could become trapped in the closing area of the side window and the sliding sunroof.

- When the convenience closing feature is operating, monitor the entire closing process and make sure that no body parts are in the closing area.

WARNING
Risk of entrapment due to not paying attention during convenience closing

When the convenience closing feature is operating, parts of the body could become trapped in the closing area of the side windows.

- When the convenience closing feature is operating, monitor the entire closing process and make sure that no body parts are in the closing area.

- **To close the windows:** press and hold the button until the windows start to move.

  The windows close and air-recirculation mode switches on.

WARNING
Risk of entrapment from the convenience opening feature

During convenience opening parts of the body could be drawn in or become trapped between the side window and window frame.

- When opening, make sure that nobody is touching the side windows.
- If someone becomes trapped, immediately press the button in the door to open the side windows.
  The side windows stop.
- To continue closing the side windows, pull on the button.

- **To reopen closed windows:** press and hold the button until the windows start to move.
  The windows move back to their original position and air-recirculation mode switches off.

Vehicles with a sliding sunroof: the sliding sunroof closes or opens simultaneously.

IF BODY PARTS BECOME ENTRAPPED IN THE SLIDING SUNROOF:

- **To stop:** press the button.
- **To open:** pull the button back.

RESETTING THE CLIMATE CONTROL SETTINGS

- Press and hold the AUTO button on the front control panel for four seconds.
  The climate control settings will be reset to the basic settings.

ACTIVATING/DEACTIVATING TRAFFIC ANNOUNCEMENTS

Multimedia system:

Radio

- Select Radio announcements.
  The traffic information service is switched on or off.

Useful vehicle functions

NOTES ABOUT THE AUTOMATICALLY ACTIVE REAR WINDOW WIPER

THE REAR WINDOW WIPER WILL AUTOMATICALLY BE ACTIVE IF THE FOLLOWING CONDITIONS ARE MET AT THE SAME TIME:

- The front windscreen wiper is switched on
- Reverse gear is engaged.

STORING THE PARKING POSITION OF THE FRONT-PASSENGER OUTSIDE MIRROR USING THE MEMORY BUTTON

Requirements

- Reverse gear has not been engaged.

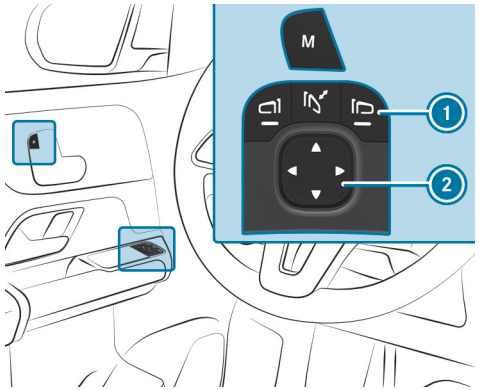

- Select the front-passenger outside mirror using button (1).
- Move the front-passenger outside mirror into the desired parking position using button (2).
- Press the M button.
- Confirm immediately using button (2) to store the setting.

No more than three seconds may pass between the M button and button (2) being pressed. The mirror adjustment will be cancelled after three seconds.

Deactivating the key function

Vehicles with KEYLESS-GO: if you deactivate the key function, the KEYLESS-GO functions are also deactivated. Access or drive authorisation via KEYLESS-GO is then no longer possible with that key. Activate the function of the key so that all functions using the key are available once again.

You can also deactivate the key's function to reduce the key's energy consumption if you do not use the vehicle or a key for an extended period of time.

- Press and hold the key button .
- With the button pressed, immediately press the key button twice in quick succession.

  The indicator lamp of the key lights up once briefly, and then again for longer.

YOU HAVE THE FOLLOWING OPTIONS TO REACTIVATE THE KEY:

- Press any button on the key.
- Start the vehicle with the key in the centre console storage compartment (⟶ page 293).

Overview of emergency call systems

Both the Mercedes-Benz emergency call system as well as the 112 emergency call system (EU eCall) can help to reduce the time between an accident and the arrival of emergency services at the site of the accident. They help locate an accident site in places that are difficult to access.

Both emergency call systems can initiate an emergency call automatically (⟶ page 570) or manually (⟶ page 570).

Only make emergency calls if you or others are in need of rescue. Do not make an emergency call in the event of a breakdown or a similar situation.

INDICATORS IN THE DISPLAYS

THE FOLLOWING MESSAGES APPEAR ON THE CENTRAL DISPLAY OR THE MEDIA DISPLAY OF BOTH EMERGENCY CALL SYSTEMS:

- SOS NOT READY: the vehicle is not switched on or the emergency call system is malfunctioning. This does not necessarily indicate complete failure of the emergency call system. Emergency calls can still be transmitted.

  The display only refers to the vehicle and does not take account of the availability of mobile phone networks and the Mercedes-Benz emergency call centre.

The functional readiness of the emergency call system on the vehicle can be seen when the SOS NOT READY display disappears once the vehicle is switched on.

- SOS: the icon appears in the display during an active emergency call.

ⓘ In case of a malfunction of the emergency call system, the speakers, microphone or airbag, for example, are faulty.
In case of a malfunction of the emergency call system, the speakers, microphone, airbag or the SOS button, for example, are faulty.

YOU CAN RECOGNISE A FAULT IN THE EMERGENCY CALL SYSTEM BY THE FOLLOWING DISPLAYS:

- A corresponding message appears on the driver and media display .

Emergency guide

Depending on the type and severity of the accident or a breakdown, the emergency guide can show safety notes in the central display.

AUTOMATIC ACTIVATION OF THE EMERGENCY GUIDE IS POSSIBLE DEPENDING ON THE SITUATION WHEN:

- The restraint system was triggered
- An emergency call was made via the vehicle interface
- Certain breakdown situations have occurred

THE SAFETY NOTES INCLUDE FOR EXAMPLE:

- Recommended actions when leaving the vehicle
- Procedure for safely removing seat belts in the event of an accident whereby the vehicle comes to rest on its roof

ⓘ The availability as well as the scope of the emergency guide can vary depending in the country and vehicle equipment.

Back to Contents

At a glance

This interactive PDF works like a website – tap or click a button to jump straight to where you want to go.
You can return here at any time via the navigation bar at the top left.

Cockpit
Indicator lamps and warning lamps (standard)
Indicator lamps and warning lamps (widescreen cockpit)
Overhead control panel
Door operating unit and seat adjustment
Emergencies and breakdowns

Cockpit

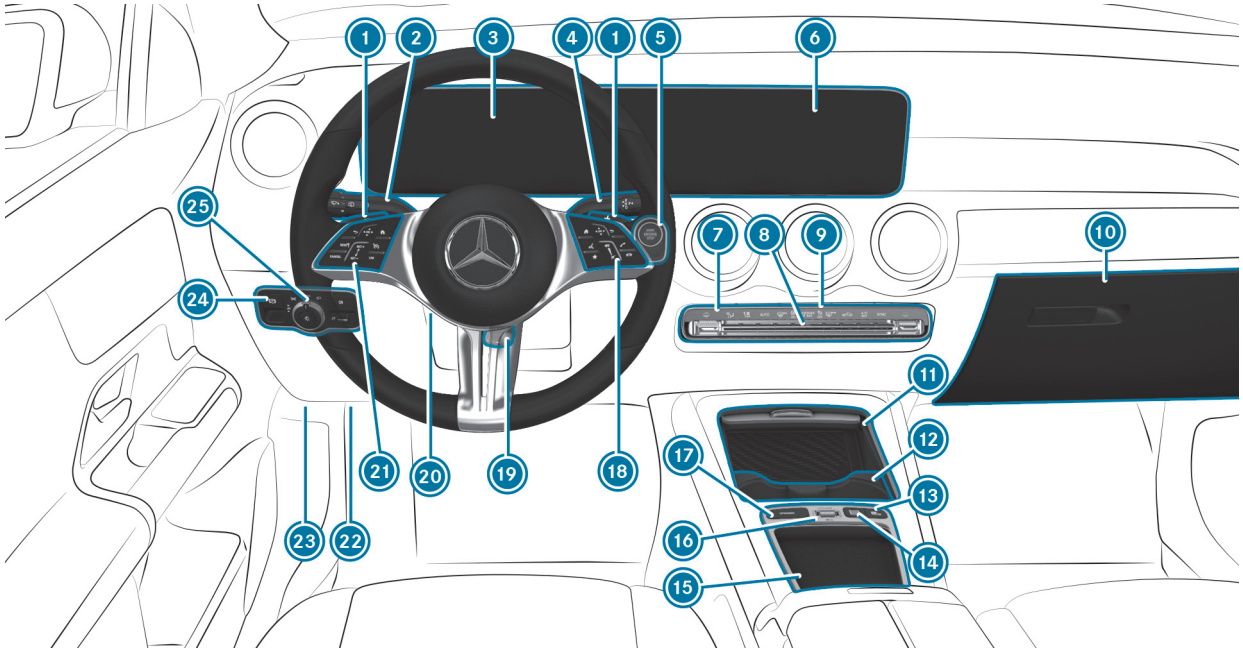

Left-hand drive vehicles

1 − Increases recuperation
+ Reduces recuperation
2 Combination switch
3 Driver display
4 DIRECT SELECT lever
5 ENGINE START / STOP Start/stop button
6 Central display
7 Climate control systems
8 Hazard warning light system
9 PASSENGER AIRBAG indicator lamps
10 Glove compartment
11 Storage compartment
12 Cup holder
13 Active Parking Assist
14 Fingerprint sensor
15 Stowage space
16 Controller for volume and switching sound on/off
Switches the MBUX multimedia system on/off
17 DYNAMIC SELECT button
18 Control panel for the MBUX multimedia system
19 Adjusts the steering wheel
20 Switches the steering wheel heater on/off
21 Control panel:
Driver display
Cruise control or variable limiter
LIM Active Distance Assist DISTRONIC
22 Diagnostics connection
23 Opens the bonnet
24 Electric parking brake
25 Light switch

Indicator lamps and warning lamps (standard)

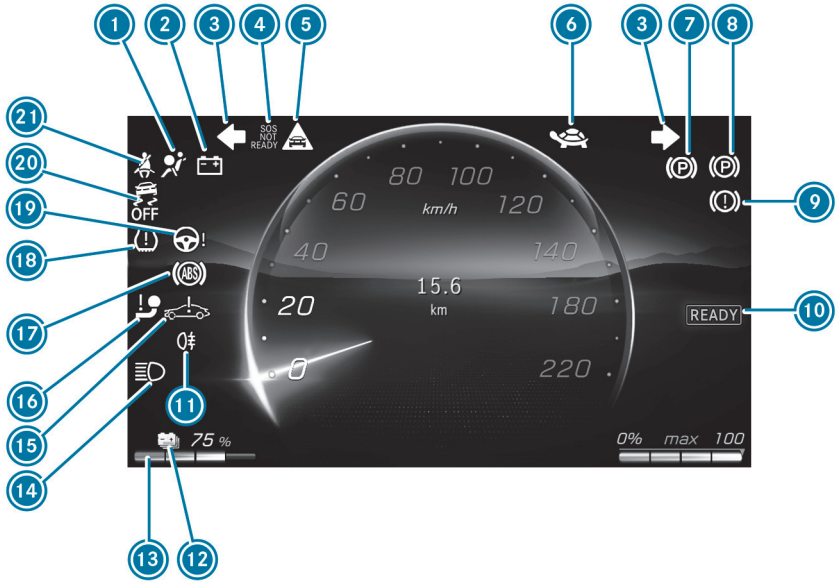

Standard driver display

1 Restraint system >

2 Electrical fault >

3 Turn signal lights >

4 Mercedes-Benz emergency call system >

5 Distance warning >

6 Reduced power >

7 Electric parking brake (yellow) >

8 Electric parking brake (red) >

9 Brakes (red) >

Brakes (yellow) >

10 Operational readiness of drive system >

11 Rear fog light >

12 Range >

13 Charge level display

14 High beam >

Low beam >

Side lights >

15 System error >

16 Trailer hitch >

17 ABS >

18 Tyre pressure monitor >

19 Power steering (red) >

Power steering (yellow) >

20 ESP® OFF >

ESP® >

21 Seat belt >

Indicator lamps and warning lamps (widescreen cockpit)

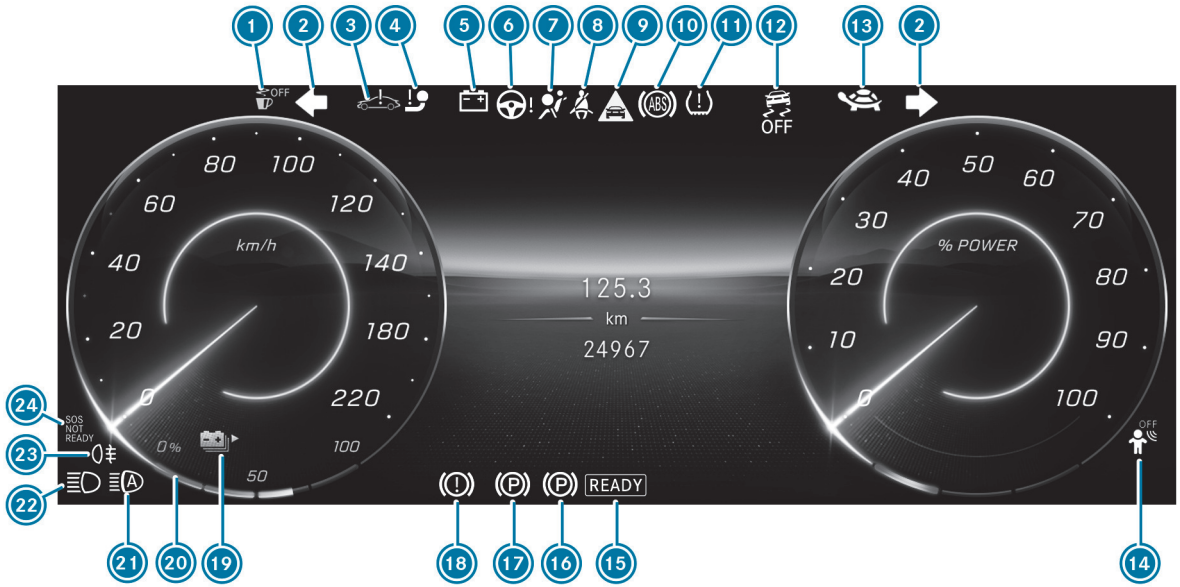

Widescreen driver display

1 ATTENTION ASSIST

2 Turn signal lights

3 System error

4 Trailer hitch

5 Electrical fault

6 Power steering (red)

Power steering (yellow)

7 Restraint system

8 Seat belt

9 Distance warning

10 ABS

11 Tyre pressure monitoring system

12 ESP® OFF

ESP®

13 Reduced power

14 Occupant presence reminder (white)

Occupant presence reminder (yellow)

15 Operational readiness of drive system

16 Electric parking brake (yellow)

17 Electric parking brake (red)

18 Brakes (red)

Brakes (yellow)

19 Range

20 Charge level display

21 Adaptive Highbeam Assist

22 High beam

Low beam

Side lights

23 Rear fog light

24 Mercedes-Benz emergency call system

Overhead control panel

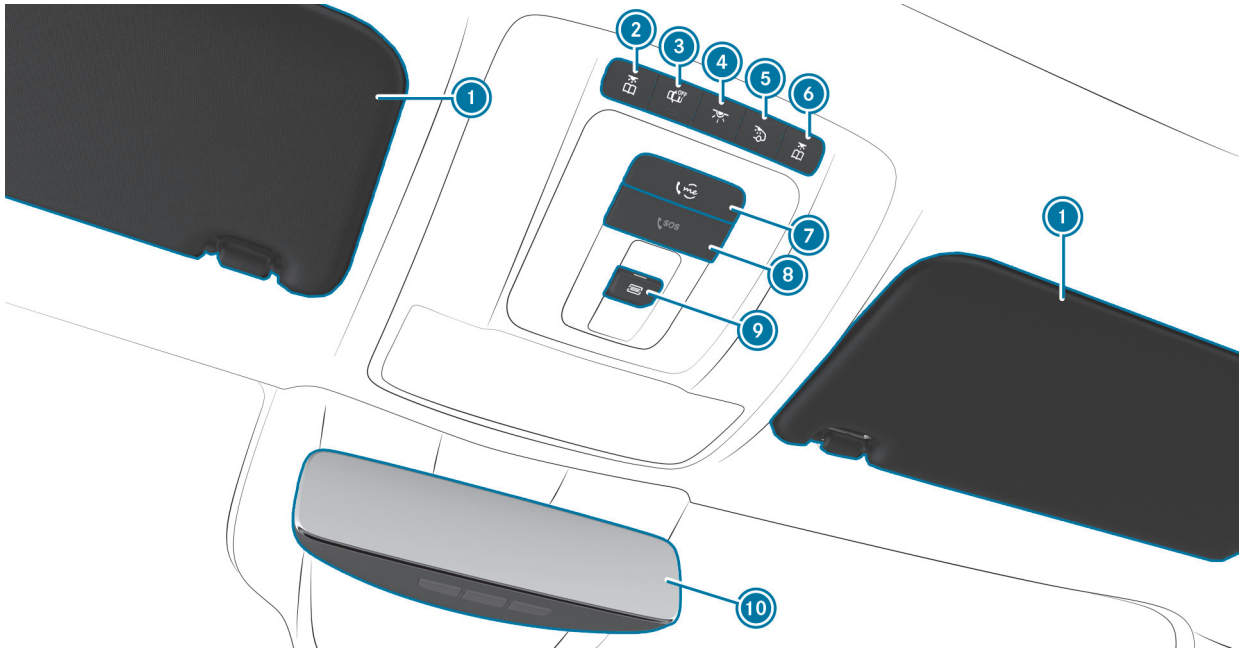

1 Sun visors

2 Switches the left-hand reading lamp on/off >

3 Switches automatic interior lighting control on/off >

4 Switches the front interior lighting on/off >

5 Switches the rear interior lighting on/off >

6 Switches the right-hand reading lamp on/off >

7 me button >

8 SOS button >

9 Opens/closes the panorama sliding sunroof >

Opens/closes the roller sunblind >

10 Inside rear-view mirror >

Door operating unit and seat adjustment

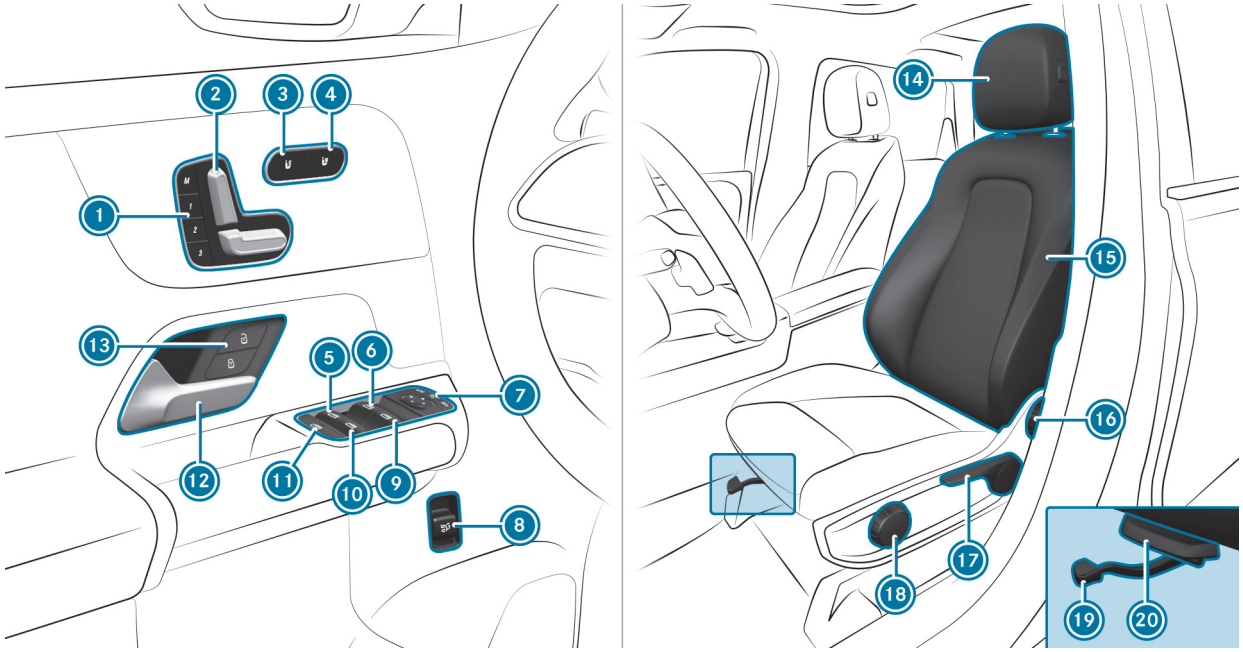

1. M Operate the memory function
2. Adjust the seats electrically
3. Switch the seat heating on/off
4. Switch the seat ventilation on/off
5. Open/close the rear left side window
6. Open/close the left side window
7. Operate the outside mirrors
8. Open/close the tailgate
9. Open/close the right side window
10. Open/close the rear right side window
11. Child safety lock for the rear side windows
12. Open the door
13. Lock/unlock the vehicle
14. Adjust the head restraints
15. Configure the seat adjustments
16. Adjust the seat backrest inclination
17. Adjust the seat height
18. Adjust the seat cushion inclination
19. Adjust the seat fore-and-aft position
20. Adjust the seat cushion length

Emergencies and breakdowns

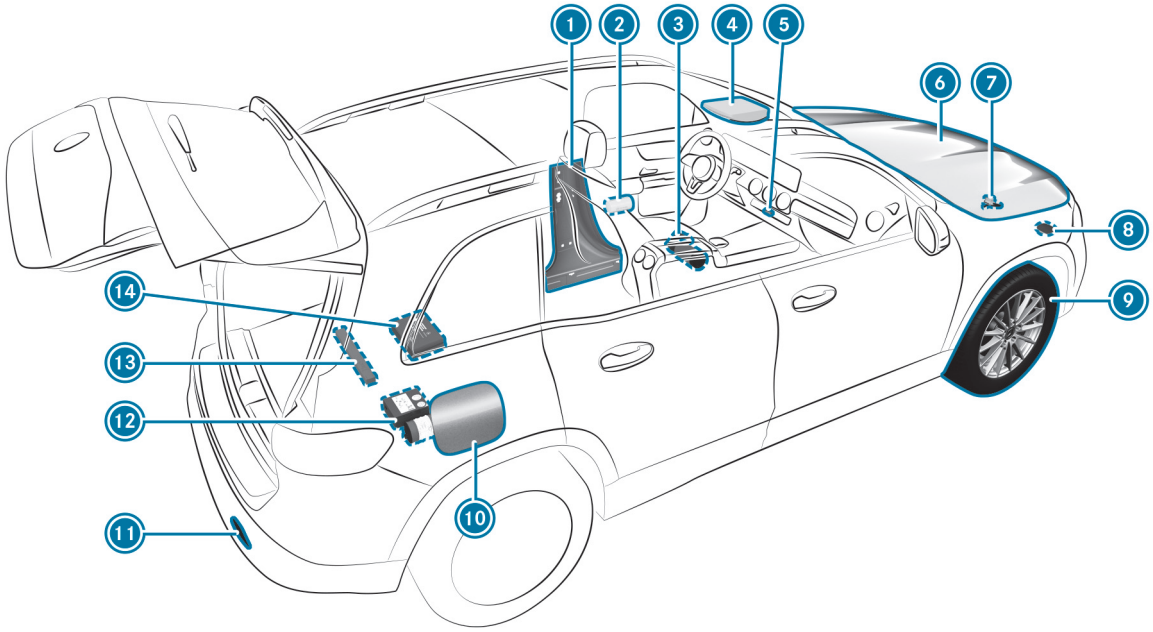

- 1 B-pillar with:
  - QR code for accessing the rescue card
- 2 Safety vests
- 3 Fire extinguisher
- 4 me button
  - SOS button
- 5 Hazard warning light system
- 6 Checking and topping up operating fluids
- 7 Operating the high-voltage disconnect device
- 8 Towing away
- 9 Flat tyre
- 10 Socket flap with:
  - information label on tyre pressure
  - QR code for accessing the rescue card
- 11 Towing away
- 12 TIREFIT kit
- 13 Warning triangle
- 14 First-aid kit (soft sided)

Back to Contents

Digital Owner's Manual

This interactive PDF works like a website – tap or click a button to jump straight to where you want to go.
You can return here at any time via the navigation bar at the top left.

Accessing the Digital Owner’s Manual

Accessing the Digital Owner's Manual

Multimedia system:

Info >> Owner's Manual >> Open Digital Owner's Manual

The Digital Owner's Manual describes the functions and operation of the vehicle and the multimedia system.

- ▶ Select one of the following menu items in the Digital Owner's Manual:
- Quick start: here you will find the first steps for adjusting your seat (driver's side).
- Tips: here you will find information that prepares you for certain everyday situations with your vehicle.
- Videos: here you can watch animations illustrating the vehicle functions.
- Messages: here you can obtain additional information regarding messages on the driver display.
- Language: select the language for the Digital Owner's Manual.

You can search for keywords using the Search search field to find quick answers to questions regarding operation of the vehicle.



1. Back
2. Contents section
3. Menu
4. Search

Some sections in the Digital Owner's Manual, suchas warning notes, can be expanded and collapsed.

Additional options for accessing the Digital Owner's Manual:

Driver display: call up concise information regarding display messages on the driver display. Pressing ⓘ will show brief information on the central display.

MBUX Voice Assistant: call-up via the voice control system

Global search: call up search results for contents of the Digital Owner's Manual on the home screen

For safety reasons, the Digital Owner’s Manual is deactivated while driving.

Back to Contents

General notes

This interactive PDF works like a website – tap or click a button to jump straight to where you want to go.
You can return here at any time via the navigation bar at the top left.

Protection of the environment
Take-back of end-of-life vehicles
Mercedes-Benz GenuineParts
Touch-sensitive control elements
Mercedes-Benz app
Operating safety
Mounting the licence plate onto the front licence plate bracket
Declarations of conformity and country-specific information
Diagnostics connection
Qualified specialist workshop
Vehicle registration
Correct use of the vehicle
REACH regulation
Notes for persons with electronic medical aids
Liability for material defects
QR code for rescue card
Data storage
Copyright

Protection of the environment

ENVIRONMENTAL NOTE
Environmental damage due to operating conditions and personal driving style

Operate your vehicle in an environmentally responsible manner to help protect the environment. Please observe the following recommendations on operating conditions and personal driving style.

Operating conditions:

- Make sure that the tyre pressure is correct.
- Do not carry any unnecessary weight (e.g. roof luggage racks once you no longer need them).
- Monitor energy consumption.
- Adhere to the service intervals.
  A regularly serviced vehicle will contribute to environmental protection.
- Always have maintenance work carried out at a qualified specialist workshop.

Personal driving style:

- Drive carefully and maintain a suitable distance from the vehicle in front.
- Avoid frequent, sudden acceleration and braking.
- Drive in a way that conserves energy. Observe the ECO display for an economical driving style.

ENVIRONMENTAL NOTE
Environmental pollution caused by irresponsible disposal of the high-voltage battery

A high-voltage battery contains materials which are harmful to the environment.

- Dispose of faulty high-voltage batteries at a qualified specialist workshop.

Take-back of end-of-life vehicles

EU COUNTRIES ONLY:
Mercedes-Benz will take back your end-of-life vehicle for environment-friendly disposal in accordance with the European Union (EU) End-Of-Life Vehicles Directive.

A network of vehicle take-back points and dismantlers has been established for you to return your vehicle. You can leave it at any of these points free of charge. This makes an important contribution to closing the recycling circle and conserving resources.

For further information about the recycling and disposal of end-of-life vehicles, and the take-back conditions, please visit the national Mercedes-Benz website for your country.

Mercedes-Benz GenuineParts

ENVIRONMENTAL NOTE
Environmental damage caused by not using recycled reconditioned components

Mercedes-Benz AG offers recycled reconditioned components and parts with the same quality as new parts. The same entitlement from the implied warranty is valid as for new parts.

► Recycled reconditioned components and parts from Mercedes-Benz AG.

NOTE
Impairment of the operating efficiency of the restraint systems from installing accessory parts or from repairs or welding

AIRBAGS AND SEAT BELT TENSIONERS, AS WELL AS CONTROL UNITS AND SENSORS FOR THE RESTRAINT SYSTEMS, MAY BE INSTALLED IN THE FOLLOWING AREAS OF YOUR VEHICLE:

- doors
- door pillars
- Sill
- Seats
- Cockpit
- Instrument display
- Centre console
- lateral roof frame

► Do not install accessory parts such as audio systems in these areas.

► Do not carry out repairs or welding.

► Have accessories retrofitted at a qualified specialist workshop.

You could jeopardise the operating safety of your vehicle if you use parts, tyres and wheels or accessories relevant to safety that have not been approved by Mercedes-Benz. Safety-critical systems (e.g. the brake system)

may malfunction. Use only Mercedes-Benz GenuineParts or parts of equal quality. Use only tyres, wheels and accessory parts that have been specifically approved for your vehicle model.

Mercedes-Benz tests original parts, as well as conversion parts and accessory parts that have been specifically approved for your vehicle model for their reliability, safety and suitability. Despite ongoing market research, Mercedes-Benz is unable to assess alternative parts. Mercedes-Benz therefore accepts no responsibility for the use of such parts in Mercedes-Benz vehicles, even if they have been officially approved or independently approved by a testing centre.

Certain parts are only officially approved for installation or modification if they comply with legal specifications. All Mercedes-Benz GenuineParts meet approval requirements. The use of non-approved parts may invalidate the vehicle's operating permit.

THIS WILL APPLY IN THE FOLLOWING SITUATIONS:

- The vehicle type is different from that for which the vehicle's operating permit was granted.
- Other road users could be at risk.
- The noise level worsens.

Always specify the vehicle identification number (VIN) when ordering Mercedes-Benz GenuineParts (⟶ page 737).

Touch-sensitive control elements

In addition to conventional switches and buttons, your vehicle is equipped with touch-sensitive control elements.

THESE ARE LOCATED IN THE FOLLOWING AREAS OF YOUR VEHICLE:

- Roof and door operating unit
- Climate control
- Steering wheel
- MBUX multimedia system

The control elements feature touch-sensitive user interface surfaces. These surfaces are controlled by pressing or swiping to adjust settings or trigger functions, forexample.

In the touchscreen area, haptic acknowledgement is relayed through the touch-sensitive surface, forexample in the form of a pulse or a vibration, or a change in user interface surface structure.

HAPTIC ACKNOWLEDGEMENT IS RELAYED IN THE FOLLOWING SITUATIONS, FOREXAMPLE:

- When pressing a button on the user interface surface
- When scrolling in a list or table
- When reaching a new area on the user interface surface, e.g. a pop-up window

WHEN USING TOUCH-SENSITIVE USER INTERFACE SURFACES, OBSERVE THE FOLLOWING POINTS TO AVOID OPERATIONAL PROBLEMS:

- Do not affix stickers orsimilar objects on the surfaces
- Do not attach a smartphone- or other holders to the surface of the central display.
- Protect the surfaces against moisture and wet conditions.
- Keep the surfaces free of dust and dirt (⟶ page 619).

In addition to a symbol, some touch-sensitive control elements also feature integrated indicator lamps. Ensure that the symbol of the control element is pressed during use.

Mercedes-Benz app

Notes on Digital Extras

You can also activate various functions (Digital Extras) retroactively via Mercedes-Benz after purchasing your vehicle.

Information is available at any Mercedes-Benz Service Centre.

Ordering and activating Digital Extras

Requirements:

- The vehicle has a wireless connection.
- The vehicle is linked to the user's Mercedes-Benz account.

ORDERING AND ACTIVATING DIGITAL EXTRAS

- ► Place the Digital Extra that you would like to purchase for your vehicle in your shopping basket in the Mercedes-Benz Store.
- ► Complete the order.

  The Digital Extra will be activated while you are using the vehicle.

SPEEDING UP ACTIVATION

- ► Switch off and lock the vehicle.
- ► Unlock the vehicle after about two minutes and switch on the vehicle.

  The Digital Extra will be activated. For some features, a notification will also appear in the vehicle's multimedia system.

If the activation was not successful, repeat the process.

Operating safety

WARNING
Risk of accident due to malfunctions or system failures

If you do not have the prescribed service/maintenance work or any required repairs carried out, this could result in malfunctions or system failures.

- ► Always have the prescribed service- and maintenance work or any required repairs carried out in a qualified workshop.

WARNING
Risk of accident or injury due to improper modifications to electronic components

Modifications to electronic components, their software or wiring can impair their functionality and/or the functionality of other networked components or safety-relevant systems.

This can endanger the vehicle's operating safety.

- ► You must not tamper with wiring, electronic components, or their software.
- ► Always have work on electrical and electronic devices carried out at a qualified specialist workshop.

If you modify the on-board electronics, the general operating permit is rendered invalid.

Observe the "On-board electronics" section in "Technical data".

NOTE
Impairment of the operating efficiency of the vehicle or individual components due to tampering with the on-board electronics

The vehicle is equipped by the manufacturer with various safety mechanisms that interact with each other.

IF THE SYSTEM DETECTS TAMPERING WITH THE ON-BOARD ELECTRONICS DUE TO AN UNAUTHORISED MODIFICATION OF CONTROL UNITS AND/OR THEIR SOFTWARE/DATA, THIS MAY HAVE THE FOLLOWING EFFECTS:

- Individual vehicle functions are (temporarily) no longer operational.
- The overall vehicle is (temporarily) no longer operational.

- ► Have the vehicle checked immediately at a qualified specialist workshop and, if necessary, reset to factory settings.

NOTE
Damage to the vehicle due to driving too fast and due to impacts to the underbody and suspension components

IN THE FOLLOWING SITUATIONS IN PARTICULAR, THERE IS A RISK OF DAMAGE TO THE VEHICLE:

- The vehicle bottoms out, e.g. on a high kerb or unmade road.
- The vehicle is driven too fast over an obstacle, e.g. a kerb, speed bump or pothole.
- A heavy object strikes the underbody or suspension components.

In these or similar situations, the vehicle body, the underbody, suspension components, wheels, tyres, or parts of the high-voltage battery could incur damage, even if this is not visible. Components damaged in this way can fail unexpectedly, lead to an increased risk of fire, or, in the event of an accident, no longer be able to withstand the stresses arising as intended.

► Have the vehicle checked and repaired immediately at a qualified specialist workshop.

or

► If driving safety is impaired while continuing your journey, pull over and stop the vehicle immediately, with due attention to road and traffic conditions, and contact a qualified specialist workshop.

Electric vehicles have an electric motor. The energy supply for the electric motor comes from the high-voltage on-board electrical system.

DANGER
Risk of death and fire due to modified and/or damaged components of the high-voltage on-board electrical system

The vehicle's high-voltage on-board electrical system is under high voltage. If you modify component parts in the vehicle's high-voltage on-board electrical system or touch damaged component parts, you may be electrocuted. In addition, modified and/or damaged components may cause a fire.

In the event of an accident or impact to the underbody, components of the high-voltage on-board electrical system may be damaged although the damage is not visible.

► Never make any modifications to the high-voltage on-board electrical system.

► Do not switch on or use the vehicle if its high-voltage on-board electrical system components have been modified or damaged.

► Never touch damaged components of the high-voltage on-board electrical system.

► After an accident, do not touch any components of the high-voltage on-board electrical system.

► After an accident, have the vehicle transported away.

► Have the components of the high-voltage on-board electrical system checked at a qualified specialist workshop and replaced if necessary.

The components of the high-voltage on-board electrical system are marked with yellow warning stickers. The cables of the high-voltage on-board electrical system are orange.



Example

High-voltage components that can become very hot are marked with a separate warning sticker:

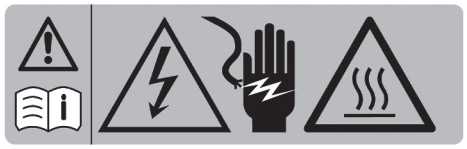

Vehicles with an electric motor generate significantly less vehicle noise emissions than vehicles with combustion engines.

This means that other road users may fail to hear the vehicle owing to its significantly lower driving noise.

It is for this reason that the vehicle is equipped with a sound generator, which serves as an acoustic vehicle alerting system (AVAS). This protective measure is prescribed by law.

This exterior noise by the sound generator (AVAS) is audible in the vehicle interior at low speeds, and is not a malfunction.

Mounting the licence plate onto the front licence plate bracket

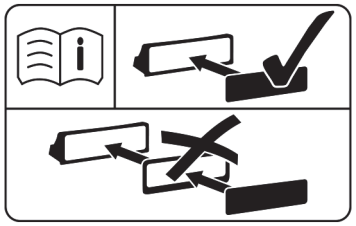

The information label can be found on the licence plate bracket, either embossed or in sticker form.

NOTE

Malfunctions and system failures due to incorrect assembly of the licence plate on the front licence plate holder

If the licence plate is incorrectly assembled on the front licence plate holder, sensors, cameras or driving and safety systems may malfunction or fail.

Observe the following points when assembling the licence plate on the front licence plate holder:

- Assemble the licence plate directly on the licence plate holder without advertising media or other holders.
- Assemble the licence plate so that it does not protrude above or to the side of the licence plate adapter.

Declarations of conformity and country-specific information

Electromagnetic compatibility

The electromagnetic compatibility of the vehicle components has been checked and certified according to the currently valid version of Regulation UN-R 10.

Country-specific information for regulatory radio components

INFORMATION REGARDING MODIFICATIONS TO RADIO COMPONENTS
Modifications to radio components may invalidate the general operating permit for the radio component in question. The radio component manufacturer shall accept no responsibility for such modifications.

INFORMATION REGARDING CROSSING NATIONAL BORDERS
You must observe the radio regulatory provisions for the country in which you are currently driving when operating the vehicle.

WIRELESS VEHICLE COMPONENTS
Only for EU and EFTA countries and countries that recognise the EU manufacturer's declaration of conformity:

CE

The following information applies to all wireless components of the vehicle and of the information systems and communication devices integrated in the vehicle:

The manufacturers of the wireless components ensure that all wireless components installed in the vehicle comply with Directive 2014/53/EU. The full texts of the EU declarations of conformity are available at the following web address:

https://certificates-of-conformity.corpinter.net/en

You can obtain further information from a Mercedes-Benz Service Centre.

FOR ISRAEL ONLY:
It is prohibited to make any change to a vehicle-installed radio component that could affect the wireless specifications of the device, including software changes, replacement of the original antenna, or adding the option to connect the device to an external antenna, without first obtaining approval from the Communica-tions Ministry, because of concern about wireless interference.

FOR THE UNITED KINGDOM ONLY:

UK CA

The following information applies to all wireless components of the vehicle and of the information systems and communication devices integrated in the vehicle:

The manufacturers of the radio components declare that all radio equipment installed in the vehicle is in compliance with the relevant statutory requirements. The full texts of the declarations of conformity are available at the following web address:

https://certificates-of-conformity.corpinter.net/en

FOR BRAZIL ONLY:

ANATEL

Note on two-way radio systems in the vehicle:

These systems are not protected against harmful interference and must not cause interference in properly approved systems.

More information is available on the ANATEL website. www.anatel.gov.br

FOR JAMAICA ONLY:
All wireless vehicle components have received a type-approval certificate from the SMA.

FOR NIGERIA ONLY:

Connection and use of this communications equipment is permitted by the Nigerian Communications Commission

Connection and use of the radio communications equipment in this vehicle is permitted by the Nigerian Communications Commission

FOR COUNTRIES OF THE EURASIAN ECONOMIC UNION ONLY:

EAC EAC

The manufacturers of the wireless components installed in the vehicle hereby declare that all wireless components installed in the vehicle comply with the technical specifications for two-way radios. You can obtain further information from a Mercedes-Benz Service Centre.

FOR UKRAINE ONLY:

The manufacturers of the wireless components installed in the vehicle hereby declare that the wireless components installed in the vehicle comply with the

technical regulations for two-way radios. You can obtain further information from a Mercedes-Benz service centre.

Battery

FOR EU COUNTRIES AND COUNTRIES THAT RECOGNISE THE EU MANUFACTURER'S DECLARATION OF CONFORMITY:

CE

For all 48 V and high-voltage batteries in the vehicle, once the applicable requirements under regulation (EU) 2023/1542 come into effect, the required information will be available at the following web address:

https://certificates-of-conformity.corpinter.net/en

Jack

ONLY FOR EU AND EFTA COUNTRIES AND COUNTRIES THAT RECOGNISE THE EU MANUFACTURER'S DECLARATION OF CONFORMITY:

CE

The following information applies for the jack:

The manufacturer of the jack guarantees that the jack complies with the guideline 2006/42/EC. A complete text of the EU Declaration of Conformity can be obtained by visiting the following website:

https://certificates-of-conformity.corpinter.net/en

You can obtain further information from a Mercedes-Benz Service Centre.

FOR THE UNITED KINGDOM ONLY:

UK CA

The following information applies for the jack:

The manufacturer of the jack guarantees that the jack complies with the Supply of Machinery (Safety) Regulations 2008 . A complete text of the UKCA Declaration of Conformity can be obtained by visiting the following website:

https://certificates-of-conformity.corpinter.net/en

TIREFIT kit

ONLY FOR EU AND EFTA COUNTRIES AND COUNTRIES THAT RECOGNISE THE EU MANUFACTURER'S DECLARATION OF CONFORMITY:

CE

The following information applies for the TIREFIT kit:

THE MANUFACTURER OF THE TIREFIT KIT GUARANTEES THAT THE TIREFIT KIT COMPLIES WITH THE FOLLOWING GUIDELINES:

- 2006/42/EC
- 2014/30/EU
- 2000/14/EC & 2005/88/EC
- 2011/65/EU & 2015/863/EU

A complete text of the EU Declaration of Conformity can be obtained by visiting the following website:

https://certificates-of-conformity.corpinter.net/en

Please note that the item numbers specified in the complete text of the Declaration of Conformity are based on data provided by the manufacturer.

You can obtain further information from a Mercedes-Benz Service Centre.

FOR THE UNITED KINGDOM ONLY:

UK CA

The following information applies for the TIREFIT KIT:

THE MANUFACTURER OF THE TIREFIT KIT GUARANTEES THAT THE TIREFIT KIT COMPLIES WITH THE FOLLOWING GUIDELINES:

- Supply of Machinery (safety) Regulations 2008
- Electromagnetic Compatibility Regulations 2016
- Noise Emission in the Environment by Equipment for use Outdoors Regulations 2001
- The Restriction of the Use of Certain Hazardous Substances in Electrical and Electronic Equipment Regulations 2012

A complete text of the UKCA Declaration of Conformity can be obtained by visiting the following website:

https://certificates-of-conformity.corpinter.net/en

Diagnostics connection

The diagnostics connection is a technical interface in the vehicle. It is used, forexample, within the scope of repair and maintenance work, or for reading out vehicle data in a specialist workshop. Diagnostic devices should therefore only be connected at a qualified specialist workshop.

WARNING
Risk of accident as a result of connecting devices to the diagnostics connection

If you connect devices to the vehicle's diagnostics connection, functioning of vehicle systems and operational safety can become impaired.

- It is recommended for safety reasons that only products which have been approved by a Mercedes-Benz service centre be used and connected.

WARNING
Risk of accident due to objects in the driver's footwell

Objects in the driver's footwell may impede pedal travel or block a depressed pedal.

This will jeopardise the operating and road safety of the vehicle.

- Stow all objects in the vehicle securely so that they cannot get into the driver's footwell.
- Make sure that there is always sufficient clearance for the pedals.
- Always fit the floor mats securely and as prescribed.
- Do not use loose floor mats and do not place floor mats on top of one another.

NOTE
Battery discharging from using devices connected to the diagnostics connection

Using devices at the diagnostics connection drains the battery.

- ► Check the charge level of the battery.
- ► If the charge level is low, charge the battery, e.g. by driving a considerable distance.

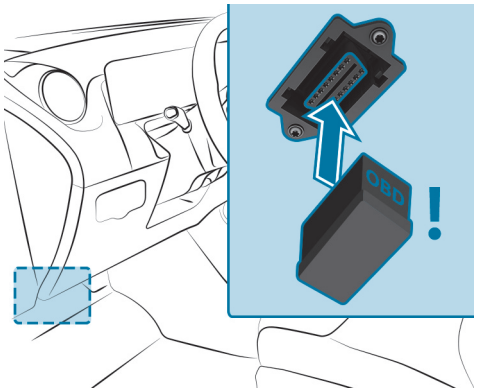

CONNECTING AND USING ANOTHER DEVICE WITH THE DIAGNOSTICS CONNECTION CAN HAVE THE FOLLOWING CONSEQUENCES:

- Malfunctions in the vehicle system
- Permanent damage to vehicle components

Please refer to the warranty terms and conditions in this regard.

Qualified specialist workshop

A qualified specialist workshop has the necessary special skills, tools and qualifications to correctly carry out any necessary work on your vehicle. This particularly applies to safety-critical work.

ALWAYS HAVE THE FOLLOWING WORK CARRIED OUT ON YOUR VEHICLE AT A QUALIFIED SPECIALIST WORKSHOP:

- Safety-critical work
- Service and maintenance work
- Repair work
- Modifications as well as installations and conversions
- Work on electronic components
- Work on high-voltage components

Mercedes-Benz recommends a Mercedes-Benz service centre.

Vehicle registration

Mercedes-Benz may ask its service centres to carry out technical inspections on certain vehicles. The quality or safety of the vehicle will be improved as a result of the inspection.

Mercedes-Benz can only inform you about vehicle inspections if Mercedes-Benz has your registration data.

IT IS POSSIBLE THAT YOUR VEHICLE HAS NOT YET BEEN REGISTERED IN YOUR NAME IN THE FOLLOWING CASES:

- if your vehicle was not purchased from an authorised specialist dealer.
- if your vehicle has not yet been inspected at a Mercedes-Benz service centre.

It is advisable to register your vehicle with a Mercedes-Benz service centre.

Notify Mercedes-Benz as soon as possible of any change of address and/or change of vehicle ownership. You can do this at a Mercedes-Benz service centre, forexample.

Correct use of the vehicle

If you remove any warning stickers, you or others could fail to recognise potential dangers. Leave all warning stickers in their designated positions.

OBSERVE THE FOLLOWING INFORMATION IN PARTICULAR WHEN DRIVING YOUR VEHICLE:

- The safety notes in this Owner's Manual, vehicle-specific supplements and further supplementary documents
- Technical data for the vehicle
- Traffic rules and -regulations of the country you are currently in
- Motor vehicle laws and safety standards of the country you are currently in
- Radio regulatory requirements of the country you are currently in

REACH regulation

For EU and EFTA countries only:

The REACH Regulation (Regulation (EC) No. 1907/2006, Article 33) stipulates a duty to supply information about substances of very high concern (SVHCs).

Mercedes-Benz AG acts to the best of its knowledge to prevent these SVHCs from being used and to enable customers to safely handle these substances. According to supplier information and internal product information, there are SVHCs known to Mercedes-Benz AG that are found in individual components of this vehicle in quantities of over 0.1 percent by weight.

FURTHER INFORMATION CAN BE OBTAINED AT THE FOLLOWING ADDRESSES:

- https://reach.mercedes-benz.com/de/home/
- https://reach.mercedes-benz.com/en/home/

Notes for persons with electronic medical aids

Despite meticulous development of their vehicle systems, Mercedes-Benz AG cannot completely rule out the interaction of vehicle systems with electronic medical aids, suchas cardiac pacemakers.

In addition, there are components installed in the vehicle that can generate magnetic fields on a par with permanent magnets, regardless of the operating status of the vehicle. These fields may occur in the area around the multimedia system and sound system, forexample, or in the area around the seats, depending on the respective vehicle equipment.

IN SOME CASES, THIS COULD RESULT IN THE FOLLOWING, DEPENDING ON THE AIDS USED:

- Medical aids malfunctioning
- Adverse health effects

Note the information and warnings from the manufacturer of the auxiliary equipment, and in case of uncertainty, please consult the manufacturer of the auxiliary equipment and/or your doctor. If there is continuing uncertainty concerning the possibility of medical aids malfunctioning, Mercedes-Benz AG recommends using fewer electrical vehicle systems and/or maintaining a distance from the components.

WHEN CHARGING THE HIGH-VOLTAGE BATTERY, KEEP A DISTANCE OF AT LEAST AN ARM'S LENGTH BETWEEN THE MEDICAL AID AND THE FOLLOWING COMPONENTS:

- the power supply equipment
  This includes charging stations in the form of a wallbox or a public charging point, forexample.
- vehicle components carrying live voltage
  This includes the charging cable and the charging control box, forexample.

ALWAYS HAVE REPAIRS AND MAINTENANCE WORK IN THE AREA OF THE FOLLOWING COMPONENTS CARRIED OUT AT A QUALIFIED SPECIALIST WORKSHOP:

- vehicle components carrying live voltage
- transmission aerials
- multimedia system and sound system

If you have any queries or suggestions, consult a qualified specialist workshop.

Liability for material defects

NOTE
Damage to the vehicle due to failure to follow instructions in this Owner's Manual.

Damage to the vehicle can arise due to failure to follow instructions in this Owner's Manual.

This damage is not covered either by the Mercedes-Benz liability for material defects or by the New- or Used-Vehicle Warranty.

- Observe the notes on correct operation of the vehicle as well as possible vehicle damage in this Owner's Manual.

QR code for rescue card

QR codes are attached in the socket flap and on the opposite side on the B-pillar. In the event of an accident, rescue services can use the QR code to quickly find the appropriate rescue card for your vehicle. The current rescue card contains the most important information about your vehicle (e.g. the routing of the electric lines) in compact form.

You can find further information at: https://rk.mb-qr.com/de/

Data storage

Data processing in the vehicle

ELECTRONIC CONTROL UNITS
Electronic control units are fitted in your vehicle. Control units process data they receive, generate themselves or exchange with each other, forexample from vehicle sensors. Some control units are required for the safe operation of your vehicle. Some assist you when driving, suchas driver assistance systems, while others enable convenience or infotainment functions.

The following section provides general information about data processing in the vehicle. Additional information regarding which vehicle data is collected, saved and transmitted to third parties and for what purpose can be found in the information directly related to the relevant functional characteristics in the respective Owner's Manual. This information is available online and digitally, depending on the vehicle's equipment.

PERSONAL DATA
A unique vehicle identification number identifies every vehicle. Depending on the country, this vehicle identification number can also be used to determine the identity of the vehicle keeper, forexample by the authorities. There are also other ways of tracing data collected from the vehicle back to the keeper or driver, suchas the licence plate number.

The data generated or processed by control units may therefore be attributable to a person or, in certain circumstances, become attributable to a person. Depending on which vehicle data is available, it may be possible to make inferences about, forexample, your driving behaviour, location, route or use patterns.

LEGAL REQUIREMENTS REGARDING THE DISCLOSURE OF DATA
If legally required to do so, manufacturers are generally obliged to provide the authorities with data stored by the manufacturer upon request and to the extent required. Forexample, this may be the case during the investigation of a criminal offence.

State authorities are themselves authorised to read out data from the vehicle in individual cases and within the applicable legal framework. In the case of an accident, information that can help with an investigation can be taken from the airbag control unit, forexample.

OPERATIONAL DATA IN THE VEHICLE
To operate the vehicle, control units process data.

THIS INCLUDES THE FOLLOWING DATA, FOREXAMPLE:

- Vehicle status information suchas the speed, longitudinal acceleration, lateral acceleration, number of wheel revolutions or the fastened seat belts display
- Ambient conditions, suchas temperature, rain sensor or distance sensor

Generally, this data is volatile and will not be stored beyond the period of operation and will only be processed within the vehicle itself. Control units, forexample, vehicle keys, often contain data memories. Their use permits the temporary or permanent documentation of technical information about the vehicle's operating state, component loads, maintenance requirements and technical events or faults.

DEPENDING ON THE TECHNICAL EQUIPMENT, THE FOLLOWING DATA IS STORED:

- Operating status of system components, suchas fill levels, tyre pressure or battery status
- Malfunctions or faults in important system components, suchas lights or brakes
- System reactions in special driving situations, suchas an airbag deployment or the intervention of stability control systems
- Information on events leading to vehicle damage
- State of charge of the high-voltage battery, estimated range

In certain cases, storing data that would have otherwise been temporary may be required. This may be the case if the vehicle has detected a malfunction, forexample.

If you make use of services, e.g. repair services or maintenance work,– the stored operating data can be read out and used together with the vehicle identification number – if necessary.

Service network employees suchas workshops and manufacturers, and third parties suchas breakdown services can read out the data. The same is true in the event of warranty claims and quality assurance measures.

In general, the readout is performed via the legally prescribed port for the diagnostics connection in the vehicle. The selected operating data document the vehicle's or individual components' technical conditions, help with fault diagnosis, compliance with warranty obligations and quality improvement. To that end, these data, particularly information about component loads, technical events, malfunctions and other faults, may be transmitted to the manufacturer along with the vehicle identification number. Furthermore, the manufacturer is subject to product liability. For this reason, the manufacturer also uses operational data from the vehicle, e.g. for recalls. This data can also be used to review the customer's warranty and guarantee claims.

Fault memories in the vehicle can be reset by a service outlet or at your request as part of repair or maintenance work.

CONVENIENCE AND INFOTAINMENT FUNCTIONS
You can store the vehicle's convenience and individual settings and change or reset them at any time.

DEPENDING ON THE VEHICLE EQUIPMENT, THIS INCLUDES THE FOLLOWING SETTINGS, FOREXAMPLE:

- Seat and steering wheel positions
- Suspension tuning and climate control settings
- Individual settings, suchas interior lighting

Depending on the selected equipment, you can import data into vehicle infotainment functions yourself.

DEPENDING ON THE VEHICLE EQUIPMENT, THIS INCLUDES THE FOLLOWING DATA, FOREXAMPLE:

- Multimedia data, suchas music, films or photos for playback in an integrated multimedia system
- Address book data for use in connection with an integrated hands-free system or an integrated navigation system
- Entered navigation destinations
- Data about the use of Internet services

This data for convenience and infotainment functions may be saved locally in the vehicle or on a device connected to the vehicle, suchas a smartphone,

USB flash drive or MP3 player. If you have entered this data yourself, you can delete it at any time.

This data is transmitted only from the vehicle to third parties at your request. This applies in particular for the use of online services based on the settings you have selected yourself.

SMARTPHONE INTEGRATION (E.G. ANDROID AUTO OR APPLE CARPLAY®)
If your vehicle is equipped accordingly, you can connect your smartphone or another mobile end device to the vehicle. You can then control them using the control elements integrated into the vehicle. Images and audio from the smartphone can be output via the multimedia system. Certain information is simultaneously transferred to your smartphone. Depending on the type of integration, thisincludes position data, day/night mode and other general vehicle states. For more information, please consult the vehicle Owner's Manual/infotainment system.

This integration allows the use of selected smartphone apps, suchas navigation or music player apps. There is no further interaction between the smartphone and the vehicle; in particular, vehicle data is not directly accessible. The type of additional data processing is determined by the provider of the app being used. The settings you can make, if any, depend on the specific app and your smartphone's operating system.

Online services

WIRELESS NETWORK CONNECTION
If your vehicle has a wireless network connection, it enables data to be exchanged between your vehicle and additional systems. The wireless network connection is made possible by the vehicle's own transmitter and receiver or by a mobile end device that you have brought into the vehicle, forexample, a smartphone. Online functions can be used via the wireless network connection. This includes online services and applications/apps provided to you by the manufacturer or by other providers.

MANUFACTURER'S SERVICES
Regarding the manufacturer's online services, the individual functions are described by the manufacturer in a suitable place, forexample, in the Owner's Manual or on the manufacturer's website, where the relevant data protection information is also given. Personal data may be used for the provision of online services. Data are exchanged via a secure connection, suchas the manufacturer's designated IT systems. Any personal data which are collected, processed and used, other than for the provision of services, is done so exclusively on the basis of legal permission. This is the case, forexample, for a legally prescribed emergency call system, a contractual agreement or when consent has been given.

You can have services and functions, some of which are subject to a fee, activated or deactivated. This excludes legally prescribed functions and services, suchas an emergency call system.

THIRD PARTY SERVICES
If you use online services from other providers (third parties), these services are the responsibility of the provider in question and subject to that provider's data protection conditions and terms of use. As a general rule, the manufacturer has no influence on the content exchanged.

For this reason, when services are provided by third parties, please ask the service provider in question for information about the type, extent and purpose of the collection and use of personal data.

Data protection rights

Depending on your country or the equipment and range of functions of your vehicle as well as the services you use and the services on offer, you are entitled to different data protection rights. Further information on data protection and your data protection rights can either be found on the manufacturer's website or you will receive this information as part of the various services

and service offers. There you will also find the contact information for the manufacturer and its data protection officers.

At a workshop, forexample, with the support of a specialist and possibly for a fee, you can have data read out which is stored only locally in the vehicle.

Copyright

INFORMATION PERTAINING TO LICENCES FOR FREE AND OPEN SOURCE SOFTWARE APPLICABLE FOR YOUR VEHICLE CAN BE OBTAINED AS FOLLOWS:

- on the data storage medium in your vehicle document wallet
- by performing an update online at: https://www.mercedes-benz.com/opensource

Back to Contents

Occupant safety

This interactive PDF works like a website – tap or click a button to jump straight to where you want to go.
You can return here at any time via the navigation bar at the top left.

Brief overview of most important points
Information on the automatic functions of the restraint system
Purpose and function of the restraint system
Seat belts
Airbags

Brief overview of most important points

Basic information

IN PARTICULAR ENSURE THE FOLLOWING CONDITIONS TO ENABLE THE COMPONENTS OF THE RESTRAINT SYSTEM TO UNFOLD THEIR PROTECTIVE POTENTIAL:

- Sit correctly (⟶ page 119).
- Fasten the seat belt correctly (⟶ page 120).
  - Function of the seat belt warning lamp (⟶ page 123).
  - Function of the rear seat belt status display (⟶ page 123).
- The restraint system warning lamp has gone out after the self-test (⟶ page 122).
- The PASSENGER AIR BAG indicator lamps display the correct status of the front passenger airbag (⟶ page 124).

FOR CLEAR UNDERSTANDING

The chapter "Occupant safety" includes information on equipment, functions and behaviours that contribute directly to safety of vehicle occupants.

THE INFORMATION IS STRUCTURED AS FOLLOWS:

- **The most important information in brief:** in this chapter, you are provided with an overview of the relationship between the restraint system and the correct behaviour of all vehicle occupants.
- **Specific information:** in further sections of the chapter "Occupant safety", you can find specific information on the equipment and functions of the restraint system.
- **Keyword search:** You can also find specific topics using the search field in the Digital Owner's Manual.

INFORMATION ON THE FOLLOWING SUBJECTS, AMONG OTHERS, IS NOT PROVIDED IN THE CHAPTER "OCCUPANT SAFETY":

- Children in the vehicle (⟶ page 139)
- Driving and driving safety systems (⟶ page 348)
- Stowage areas (⟶ page 232)

DEFINING GENERIC TERMS CLEARLY

IN THIS OWNER'S MANUAL, THE FOLLOWING GENERIC TERMS ARE USED:

- **Occupant safety:** comprises the components and system functions which help to minimise, as much as possible, the stresses on and consequences for vehicle occupants during an accident.
- **Restraint system:** comprises those components which, along with the vehicle structure, help prevent vehicle occupants from potentially coming into contact with parts of the vehicle interior. The seat belts and airbags, for example, are components of the restraint system.
- **Child restraint system:** you can find all information on this subject in the chapter "Children in the vehicle" (⟶ page 139).

BE DILIGENT

For the components of the restraint system to provide the intended level of protection, it is essential that your posture is correct and that the seat belt is correctly fastened.

Please bear in mind that carelessness regarding the seating position and putting on the seat belt may have serious consequences. Be diligent and make sure that all vehicle occupants are sitting correctly and have fastened their seat belts properly before starting every journey (⟶ page 119).

Information on the correct seat position

The seat position must be correct in order for the components of the restraint system to provide the intended level of protection.

The seat position influences both the protection provided by the seat belt and the additional protection provided by the airbag.

A correct seat position in which the seat is nearly perfectly upright and a correctly fastened seat belt reduce the risks posed by the airbag when it is deployed.

Keep in mind space considerations when choosing a seat. With the seat in the correct, nearly upright position, your head should not touch the roof.

WARNING
Risk of injury- or death due to an incorrect seat position

If you deviate from the correct seat position, the airbag cannot provide its intended protective function.

Each vehicle occupant must make sure of the following.

- ► Put the seat in the correct position.
- ► Fasten seat belts correctly.
- ► Observe the following information.

IN ORDER FOR THE RESTRAINT SYSTEM TO PROVIDE THE INTENDED LEVEL OF PROTECTION, OBSERVE THE FOLLOWING INFORMATION:

- Before starting your journey, adjust your seat correctly (⟶ page 203).

  When doing so, make sure you are able to fasten your seat belt correctly. The shoulder belt strap must be routed forward from the seat belt outlet over the centre of your shoulder.
- Keep your distance from the airbags, especially the front airbags. Set the driver's seat and front passenger seat as far back as possible while making sure the seat belt is fastened correctly.
- If persons are sitting on the rear seats, vehicle occupants should maintain an sufficient distance to the parts of the vehicle interior in front of them.
- Make sure there are no people, animals or objects between the vehicle occupants and an airbag.
- If you are the driver, observe the following information on the correct position of the driver's seat (⟶ page 203).

  Only hold the steering wheel by the steering wheel rim. This allows the driver's airbag to fully deploy.

  During pregnancy in particular, it is important to ensure the greatest possible distance from the steering wheel due to the change in stature and the unborn child.
- Assume a nearly upright sitting posture, with your buttocks positioned as far back as possible in the gap between the seat cushion and the seat backrest.

  Your back must lie as flatly and as firmly as possible against the seat backrest.
- While driving, do not lean forward and do not lean against the door or side window. You may otherwise be in the deployment area of the airbags.

- Sit with their feet resting on the floor, if possible. Your thighs are supported slightly by the seat cushion.

  Do not put your feet on the cockpit, for example. Your feet may otherwise be in the deployment area of the airbag.
- Fasten seat belts correctly (⟶ page 120).

Notes on wearing the seat belt correctly

Always fasten your seat belt correctly before starting a journey. A seat belt can only provide the best level of protection if it is worn correctly.

WARNING
Risk of injury or death due to incorrectly fastened seat belt

If the seat belt is not worn correctly, it cannot perform its intended protective function.

In addition, an incorrectly fastened seat belt can also cause injuries, for example, in the event of an accident or when braking or changing direction suddenly.

► Always ensure that all vehicle occupants have their seat belts fastened correctly and are sitting properly.

WARNING
Risk of injury or death when additional restraint systems are not used for persons with a smaller stature

Persons under 1.50 m tall cannot wear the seat belt correctly without a suitable additional restraint system.

► Always secure persons under 1.50 m tall in a suitable restraint system.

Observe the following information on the correct seat position and posture (⟶ page 119).

EACH VEHICLE OCCUPANT MUST OBSERVE THE FOLLOWING NOTES IN PARTICULAR:

- The seat belt must not be twisted.
- The shoulder belt strap must be routed forward from the seat belt outlet over the centre of your shoulder.
- The shoulder belt strap should neither touch your neck nor be routed under your arm or behind your back.
- The lap belt must be routed as low down across the hips as possible.

  In addition, push the lap belt down as far as possible across your hips and pull tight with the shoulder belt strap. Never route the lap belt across your abdomen.
- After being tightened, the shoulder belt strap and lap belt must fit snugly against the body.
- Particularly during pregnancy, the instructions for wearing the seat belt correctly must be followed consistently due to the change in stature and the unborn child (⟶ page 121).
- Avoid wearing bulky clothing, e.g. a winter coat.

- Never route the seat belt across sharp, pointed, abrasive or fragile objects.
- Only one person should use each seat belt at any one time.
- Never secure objects with a seat belt if the seat belt is also being used by one of the vehicle's occupants.

  Also ensure that no objects, e.g. a cushion, are ever placed between a person and the seat.

If you are driving with a child in the vehicle, observe the information in the chapter "Children in the vehicle" (⟶ page 139).

Observe the instructions for loading the vehicle when securing objects, luggage or loads (⟶ page 232).

Wearing a seat belt during pregnancy

BE DILIGENT

PAY PARTICULAR ATTENTION TO THE FOLLOWING INSTRUCTIONS DURING PREGNANCY DUE TO THE CHANGE IN STATURE AND THE UNBORN CHILD:

- Correct sitting position and posture
- Wearing the seat belt correctly

The correct sitting position with a nearly upright sitting posture and a correctly fastened seat belt reduce the risks for the mother and unborn child in the event of an accident.

Particularly during pregnancy, due to the change in stature and the unborn child, maintain as much distance as possible between your abdomen (baby bump) and the steering wheel.

If it is not possible to maintain a sufficient distance to the steering wheel whilst simultaneously ensuring safe operation of the vehicle, another person should drive the vehicle.

ⓘ Mercedes-Benz recommends that you seek professional advice, e.g. from a doctor, about the possible risks involved in driving in a vehicle when pregnant.

WEARING THE SEAT BELT



PARTICULARLY DURING PREGNANCY, OBSERVE THE FOLLOWING NOTES:

- Push the lap belt down as far as possible across your hips and pull tight with the shoulder belt strap. Never route the lap belt across your abdomen (baby bump).
- The shoulder strap should run along the side of the abdomen (baby bump).
- Never position any objects between the person and the seat belt, not even cushions for example.

Fastening seat belts

If the seat belt is pulled quickly or sharply, the seat belt retractor locks. The seat belt strap cannot be pulled out any further.



► Always engage seat belt tongue (2) of the seat belt into seat belt buckle (1) of the corresponding seat.

NOTE
Deployment of components of the restraint system when the front passenger seat is unoccupied and a seat belt is buckled

When the front passenger seat is unoccupied and the seat belt tongue of the seat belt is engaged in the seat belt buckle, components of the restraint system may deploy unnecessarily on the front passenger side, e.g. the seat belt tensioner.

► Only buckle the seat belts as intended.

Function of the restraint system warning lamp

When the vehicle is switched on, a self-test is performed, during which the restraint system warning lamp lights up. It goes out no later than a few seconds after the vehicle is started. The components of the restraint system are then functional.

A MALFUNCTION HAS OCCURRED IN THE RESTRAINT SYSTEM IF:

- the restraint system warning lamp does not light up or is lit continuously when the vehicle is switched on
- the restraint system warning lamp lights up continuously or repeatedly during a journey

If components of the restraint system have been deployed, the restraint system warning lamp lights up continuously.

WARNING
Risk of injury due to malfunctions in the restraint system

Components in the restraint system may be activated unintentionally or not deploy as intended in an accident.

► Have the restraint system checked and repaired immediately at a qualified specialist workshop.

If the restraint system is malfunctioning, the automatic high-voltage emergency shut-off may not function.

DANGER
Risk of fatal injury due to malfunctioning automatic high-voltage emergency shutoff

In the event of an accident, the high-voltage on-board electrical system may not be deactivated as intended.

You may receive an electric shock if you touch the damaged components of the high-voltage on-board electrical system.

- ► Have the automatic high-voltage emergency shutoff checked and repaired immediately at a qualified specialist workshop.
- ► After an accident, switch off the vehicle immediately.

Mercedes-Benz recommends that you have the vehicle towed to a qualified specialist workshop.

Function of the seat belt warning lamp

The [ ] seat belt warning lamp on the driver display is a reminder that the driver and/or front passenger are not wearing their seat belts.

All vehicle occupants must fasten their seat belts correctly (⟶ page 120).

In addition, a warning tone may sound.

When the driver and the front passenger fasten their seat belts, the seat belt warning goes out.

Function of the rear seat belt status display

The rear seat belt status display is only available for certain countries.

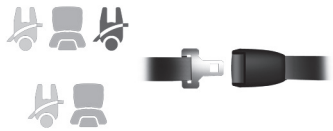

Example: vehicle with five rear seats

The colour of the symbol is intended to help you quickly identify the status of the rear seat belt.

Every time the vehicle is switched on, the rear seat belt status display informs you for a certain amount of time which rear seat belt is not fastened.

POSSIBLE COLOUR OF THE SYMBOL:

- Grey: the rear seat belt is not fastened.
- Green: the seat belt tongue of a rear seat belt is engaged in the seat belt buckle of the displayed seat.
- Red: the person in the rear seat has unfastened their seatbelt.

If a vehicle occupant unfastens a seat belt in the rear while the vehicle is motion, the rear seat belt status display reappears.

In addition, a warning tone may sound.

Function of the PASSENGER AIR BAG indicator lamps (front passenger airbag)



Vehicles without automatic front passenger airbag shutoff have a special sticker affixed to the side of the cockpit on the front passenger side (⟶ page 144). Indicator lamps PASSENGER AIR BAG ON and OFF have no function in this case and are not an indication of automatic front passenger airbag deactivation.

On vehicles with automatic front passenger airbag deactivation, the PASSENGER AIR BAG indicator lamps display the status of the front passenger airbag.

If the front passenger seat is occupied or a child restraint system is installed on it, make sure both before and during the journey that the status of the front passenger airbag is correct for the situation.

WARNING
Risk of potentially fatal injuries due to objects trapped under the front passenger seat

Objects trapped under the front passenger seat may interfere with the function of the automatic front passenger airbag shutoff or damage the system.

- ► Do not stow any objects under the front passenger seat.
- ► When the front passenger seat is occupied, ensure that no objects have become trapped beneath the front passenger seat.

Self-test: when the vehicle is switched on, both the PASSENGER AIR BAG ON and OFF indicator lamps light up simultaneously for several seconds.

AFTER THE SELF-TEST, YOU CAN DETERMINE THE STATUS OF THE FRONT PASSENGER AIRBAG AS FOLLOWS:

- **Front passenger airbag disabled:** PASSENGER AIR BAG OFF lights up continuously.

  The front passenger airbag will not be deployed in the event of an accident. If PASSENGER AIR BAG OFF is lit, no one may use the front passenger seat.

  If a rearward-facing child restraint system is fitted on the front passenger seat, PASSENGER AIR BAG OFF must be lit continuously.
- **Front passenger airbag enabled:** PASSENGER AIR BAG ON lights up for up to 60 seconds or until both the PASSENGER AIR BAG ON and OFF indicator lamps go out.

The front passenger airbag may be deployed during an accident. If the front passenger airbag is in this status, no rearward-facing child restraint system may be fitted on the front passenger seat.

ⓘ If you are driving with a child in the vehicle, observe the information in the chapter "Children in the vehicle" (⟶ page 139).

⚠ **WARNING**
Risk of injury or death due to a disabled front passenger airbag

The front passenger airbag is disabled when the PASSENGER AIR BAG OFF indicator lamp is lit.

A person in the front passenger seat could then, for example, come into contact with the vehicle interior, especially if the person is sitting too close to the cockpit.

IF THE FRONT PASSENGER SEAT IS OCCUPIED, ALWAYS ENSURE THAT:

- the classification of the person in the front passenger seat is correct and the front passenger airbag is enabled or disabled in accordance with the person in the front passenger seat.
- the front passenger seat has been moved as far back as possible.
- the person is seated correctly.

► Both before and during the journey, ensure that the status of the front passenger airbag is correct.

MALFUNCTION OF THE AUTOMATIC FRONT PASSENGER AIRBAG DEACTIVATION

The PASSENGER AIR BAG OFF indicator lamp and the restraint system warning lamp light up simultaneously.

In this case, no one may use the front passenger seat and no child restraint system may be fitted on the front passenger seat.

Have the automatic front passenger airbag shutoff checked and repaired immediately at a qualified specialist workshop.

Disabling or enabling the front passenger airbag

The automatic front passenger airbag shutoff can disable or enable the front passenger airbag according to the situation.

This happens automatically as a result of the classification of the person or child restraint system on the front passenger seat.

You cannot manually disable or enable the front passenger airbag.

Information on the child restraint system

When fitting a child restraint system, observe the notes in "Children in the vehicle" (⟶ page 139).

NOTES ON THE CHILD RESTRAINT SYSTEM ON THE FRONT PASSENGER SEAT

WARNING
Risk of injury or fatal injuries if the front passenger airbag is enabled

If the front passenger airbag is enabled, a child on the front passenger seat may be struck by the front passenger airbag during an accident.

- NEVER use a rearward facing child restraint system on a seat protected by an ACTIVE AIRBAG in front of it, DEATH or SERIOUS INJURY to the CHILD can occur.

Also pay particular attention to the notes on rearward-facing or forward-facing child restraint systems on the front passenger seat (⟶ page 145).

Information on the automatic functions of the restraint system

Function of the automatic front passenger airbag deactivation

A PERSON ON THE FRONT PASSENGER SEAT MUST OBSERVE THE FOLLOWING INSTRUCTIONS:

- Sit correctly (⟶ page 119).
- Fasten seat belts correctly (⟶ page 120).

The automatic front passenger airbag shutoff can disable or enable the front passenger airbag according to the situation.

MAKE SURE YOU OBSERVE THE FOLLOWING INFORMATION:

- The status of the front passenger airbag, see "Function of the PASSENGER AIR BAG indicator lamps"(⟶ page 124).
- When fitting a child restraint system to the front passenger seat, observe the vehicle-specific information (⟶ page 145).



STATUS OF THE FRONT PASSENGER AIRBAG IN RELATION TO THE STATURE OF THE PERSON:

- **Front passenger airbag disabled:** PASSENGER AIR BAG OFF lights up continuously.

  The front passenger airbag will not be deployed in the event of an accident. If PASSENGER AIR BAG OFF is lit, no one may use the front passenger seat.
- **Front passenger airbag enabled:** PASSENGER AIR BAG ON lights up for up to 60 seconds or until both the PASSENGER AIR BAG ON and OFF indicator lamps go out.

  The front passenger airbag may be deployed during an accident. Observe the following information on the correct seat position (⟶ page 119).

  Vehicles with rear seats: a person of smaller stature should use a rear seat.

SYSTEM LIMITS

THE FRONT PASSENGER AIRBAG MAY BE DISABLED BY MISTAKE, E.G. IN THE FOLLOWING SITUATIONS:

- The front passenger transfers their weight by supporting themselves on a vehicle armrest.
- The front passenger sits in such a way that they unload the seat surface.

NOTE
Deployment of components of the restraint system when the front passenger seat is unoccupied

IN AN ACCIDENT, THE COMPONENTS OF THE RESTRAINT SYSTEM MAY DEPLOY UNNECESSARILY ON THE FRONT PASSENGER SIDE IF:

- There are heavy objects on the front passenger seat.
- The seat belt tongue is engaged in the seat belt buckle of the front passenger seat and the front passenger seat is unoccupied.

► Stow objects in a suitable place.

► Only one person should use each seat belt at any one time.

Depending on the detected accident situation, the window airbag on the front passenger side may deploy. The airbag is deployed regardless of whether the front passenger seat is occupied.

Function of PRE-SAFE® (anticipatory occupant protection)

PRE-SAFE® is able to detect certain critical driving situations and implement pre-emptive measures to protect the vehicle occupants.

PRE-SAFE® CAN IMPLEMENT THE FOLLOWING MEASURES INDEPENDENTLY OF EACH OTHER:

- tightening the seat belts on the driver's seat and front passenger seat.
- closing the side windows.
- **Vehicles with sliding sunroof:** closing the sliding sunroof.
- **Vehicles with memory function:** moving the front passenger seat to a more favourable seat position.
- **PRE-SAFE® Sound:** provided that the multimedia system is switched on, generating a brief noise signal to stimulate the innate protective mechanism of a person's hearing.

NOTE
Damage caused by objects in the footwell or behind the seat

The automatic adjustment of the seat position may result in damage to the seat and/or the object.

► Stow objects in a suitable place.

Reversing the PRE-SAFE® system measures

If an accident did not occur, the pre-emptive measures that were taken are reversed.

You will need to perform certain settings yourself.

- If the seat belt pre-tensioning is not reduced, move the seat backrest slightly backwards.
  The seat belt pre-tensioning releases.

Seat belt adjustment function

Vehicles with PRE-SAFE®: After you have fastened the seat belt of the front seat, it may adjust itself against your body by pulling at the shoulder until somewhat tight. Do not hold the seat belt tightly while it is adjusting.

You can activate and deactivate the seat belt adjustment function using the multimedia system (⟶ page 129).

Activating/deactivating seat belt adjustment via the multimedia system

Multimedia system:

Settings » Vehicle » Occupant protection

- Activate or deactivate Belt adjustment.

Overview of the automatic measures after an accident

DEPENDING ON THE TYPE AND SEVERITY OF THE ACCIDENT, AND DEPENDING ON THE VEHICLE'S EQUIPMENT, THE FOLLOWING MEASURES CAN BE IMPLEMENTED, FOR EXAMPLE:

- automatic braking (post-collision brake) (⟶ page 129)
- activating the hazard warning lights
- triggering an automatic emergency call (⟶ page 66)
- Shutting off the drive system and high-voltage on-board electrical system
  To start the vehicle again, switch the vehicle off and back on (⟶ page 291). Depending on the type and severity of the accident, the vehicle might no longer start.
- unlocking the vehicle doors
- lowering the side windows
- displaying the emergency guide on the central display (⟶ page 560)
- switching on the interior lighting

Function of the post-collision brake after an accident

Depending on the accident situation, the post-collision brake can minimise the severity of a further collision or even avoid it.

If an accident is detected, the post-collision brake can initiate automatic braking. When the vehicle has come to a standstill, the electric parking brake is automatically applied.

THE DRIVER CAN CANCEL AUTOMATIC BRAKING BY TAKING THE FOLLOWING ACTIONS:

- braking more strongly than automatic braking
- fully depressing the accelerator pedal with force

Purpose and function of the restraint system

Overview of deployment situations (restraint system)

IN PARTICULAR ENSURE THE FOLLOWING CONDITIONS TO ENABLE THE COMPONENTS OF THE RESTRAINT SYSTEM TO UNFOLD THEIR PROTECTIVE POTENTIAL:

- Sit correctly (⟶ page 119).
- Fasten seat belts correctly (⟶ page 120).
  - Function of the seat belt warning lamp (⟶ page 123).
  - Function of the rear seat belt status display (⟶ page 123).
- The restraint system warning lamp does not light up after the self-check (⟶ page 122).
- The PASSENGER AIR BAG indicator lamps display the correct status of the front passenger airbag (⟶ page 124).

DEPENDING ON THE DETECTED DEPLOYMENT SITUATION, THE COMPONENTS OF THE RESTRAINT SYSTEM CAN BE ACTIVATED OR DEPLOYED INDEPENDENTLY OF EACH OTHER:

- Seat belt tensioner: frontal impact, rear impact, side impact, rollover
- Driver's airbag, front passenger airbag: frontal impact
- Knee airbag: frontal impact
- Side airbag: side impact
- Window airbag: side impact, rollover, frontal impact

The installation location of an airbag is identified by the AIRBAG (⟶ page 137) symbol.

Observe the information on how the restraint system works (⟶ page 130).

Information on how the restraint system works

The function of the restraint system depends on the severity of the impact detected and the apparent type of accident.

For more information about types of accidents, see "Overview of deployment situations" (⟶ page 130).

The activation thresholds for the components of the restraint system are determined based on the evaluation of the sensor values measured at various points in the vehicle. This process is pre-emptive in nature. The triggering of the components of the restraint system must take place in good time at the start of the impact.

Factors which can only be seen and measured after a collision has occurred cannot play a decisive role in airbag deployment. They also do not provide an indication of airbag deployment.

The vehicle may be deformed significantly without an airbag being deployed. This is the case if only parts which are relatively easily deformed are affected

and the rate of vehicle deceleration is not high. Conversely, an airbag may be deployed even though the vehicle suffers only minor deformation. If, e.g. very rigid vehicle parts such as longitudinal members are hit, this may result in sufficiently high levels of vehicle deceleration.

Depending on the apparent type of accident and the detected deployment situation, seat belt tensioners and/or airbags supplement the protection offered by a correctly worn seat belt.

When enabled, an airbag can provide additional protection for the respective vehicle occupant.

POTENTIAL PROTECTION PROVIDED BY EACH AIRBAG:

- Knee airbag: thighs, knees and lower legs
- Driver's airbag, front passenger airbag: head and ribcage
- Window airbag: head
- Side airbag: ribcage and pelvis

However, no system available today can completely eliminate injuries and fatalities in every accident situation. In particular, the seat belt and airbag generally do not protect against objects penetrating the vehicle from the outside. It is also not possible to completely rule out the risk of injury caused by the airbag deploying.

Mercedes-Benz recommends that you have the vehicle towed to a qualified specialist workshop after an accident. Take this into account, particularly if a seat belt tensioner has been triggered or an airbag deployed.

IF THE SEAT BELT TENSIONERS ARE TRIGGERED OR AN AIRBAG IS DEPLOYED, YOU WILL HEAR A BANG, AND A SMALL AMOUNT OF FINE POWDER MAY ALSO BE RELEASED:

- The bang will not generally affect your hearing.
- In general, the fine powder released is not hazardous to health but may cause short-term breathing difficulties to persons suffering from asthma or other respiratory problems.

  Provided it is safe to do so, leave the vehicle immediately or open the window in order to prevent breathing difficulties.

Information on the limited protection provided by the restraint system

RISK DUE TO THE INCORRECT BEHAVIOUR OF VEHICLE OCCUPANTS

EVERY VEHICLE OCCUPANT MUST MAKE SURE OF THE FOLLOWING IN PARTICULAR:

- They observe the information on the correct seat position (⟶ page 119).
- Do not stow any heavy, pointed, sharp or fragile objects in the pockets of clothing items. Stow such objects in a suitable place.

WARNING
Risk of injury or death due to incorrect seat position

The seat belt will not offer the intended level of protection if you have not moved the seat backrest to an almost vertical position.

In particular, you may slip under the seatbelt and injure yourself.

- ► Adjust the seat properly before beginning your journey.
- ► Always ensure that the seat backrest is in an almost vertical position and that the shoulder section of your seat belt is routed across the centre of your shoulder.

RISK DUE TO OBJECTS IN THE VEHICLE INTERIOR

EVERY VEHICLE OCCUPANT MUST MAKE SURE OF THE FOLLOWING IN PARTICULAR:

- They observe the information on the correct seat position (⟶ page 119).
- There are no objects between the seat, door and door pillar (B-pillar).
- There are no hard objects, e.g. clothes hangers, hanging on the grab handles or coat hooks.
- Do not stow any heavy, pointed, sharp or fragile objects in the pockets of clothing items. Stow such objects in a suitable place.

To secure objects, luggage or cargo, observe the instructions for loading the vehicle (⟶ page 232).

⚠ **WARNING**
Risk of injury or death due to blocked seat belt buckle or seat belt anchorage

Objects next to the front seat that block the seat belt buckle or the moving seat belt anchorage on the front seat impair the function of the seat belt tensioners.

► Before starting the journey, make sure that there are no objects around the seat belt buckle or between the front seat and door.

⚠ **WARNING**
Risk of injury from objects in the deployment area of an airbag

Objects in the deployment area of an airbag can hinder or prevent the correct deployment of the airbag.

The airbag may then deploy in an uncontrolled manner and may even cause additional injuries to the vehicle occupants by deploying. This may be the case in particular if the airbag is integrated into the seat.

► Always stow and secure objects correctly.

► Before commencing your journey, make sure that no objects are stowed in the deployment area of an airbag.

The installation location of an airbag is identified by the symbol AIRBAG (⟶ page 137).

RISK DUE TO FITTING ACCESSORIES

Do not attach accessories such as mobile navigation devices, mobile phones or cup holders, within the deployment area of an airbag, e.g. on the cockpit, on the door, on the side window or on the side trim.

In addition, no connecting cables, tensioning straps or retaining straps must be routed or attached to the vehicle within the deployment area of an airbag. Always comply with the accessory manufacturer's installation instructions and, in particular, the notes on suitable places for installation.

WARNING
Risk of injury or death due to unsuitable protective covers

Due to unsuitable protective covers, the airbags cannot protect vehicle occupants as they are designed to do.

- You should only use protective covers that have been approved for the corresponding seat by Mercedes-Benz.

In addition, the function of the automatic front passenger airbag deactivation could be restricted due to an unsuitable protective cover. If the front passenger seat is occupied, ensure that the PASSENGER AIR BAG indicator lamps display the correct status of the front passenger airbag (→ page 124).

RISK DUE TO PETS IN THE VEHICLE INTERIOR

WARNING
Risk of accident and injury due to animals left unsecured or unattended in the vehicle

If you leave animals in the vehicle unattended or unsecured, they could press buttons or switches, for instance.

AN ANIMAL MAY:

- activate vehicle equipment and become trapped, for example
- switch systems on or off and endanger other road users

Unsecured animals may be thrown about the vehicle in the event of an accident, or sudden steering and braking manoeuvres, and injure vehicle occupants.

- Never leave animals unattended in the vehicle.
- Always correctly secure animals while driving, e.g. using a suitable animal carrier.

RISK DUE TO MODIFICATION, DAMAGE OR WEAR TO THE COMPONENTS OF THE RESTRAINT SYSTEM

⚠ **WARNING**
Risk of injury or death due to modifications to the restraint system

Vehicle occupants may no longer be protected as intended if alterations are made to the restraint system.

- ► Never alter the parts of the restraint system.
- ► Never tamper with the wiring or any electronic component parts or their software.

If it is necessary to modify the vehicle to accommodate a person with disabilities, contact a qualified specialist workshop.

Mercedes-Benz recommends that you use driving aids which have been approved for your vehicle by Mercedes-Benz.

⚠ **WARNING**
Risk of injury or death due to damaged or modified seat belts

SEAT BELTS CANNOT PROVIDE PROTECTION IN THE FOLLOWING SITUATIONS:

- the seat belt is damaged, has been modified, is extremely dirty, bleached or dyed
- the seat belt buckle is damaged or extremely dirty
- modifications have been made to the seat belt tensioner, seat belt anchorage or seat belt retractor

Seat belts may sustain non-visible damage in an accident, e.g. due to glass splinters.

Modified or damaged seat belts could tear or fail in the event of an accident, for example.

Modified seat belt tensioners could accidentally trigger or fail to function as intended.

- ► Never modify the seat belt system, for example the seat belt, seat belt buckle, seat belt tensioner, seat belt anchorage and seat belt retractor.
- ► Make sure that the seat belts are undamaged, not worn and clean.
- ► Always have the seat belts checked immediately after an accident at a qualified specialist workshop.

Mercedes-Benz recommends that you use seat belts which have been approved for your vehicle by Mercedes-Benz.

WARNING
Risk of injury due to modifications to the cover of an airbag

If you modify the cover of an airbag or affix objects such as stickers to it, the airbag can no longer function as intended.

- Never modify the cover of an airbag.
- Do not attach any objects to the cover.

The installation location of an airbag is identified by the AIRBAG symbol (⟶ page 137).

WARNING
Risk of injury due to malfunctioning sensors in the door

The function of the airbags can be impaired due to modifications or incorrect work performed on the doors or door trim, or if the doors are damaged.

- Never modify the doors or parts of the doors.
- Always have work on the doors or door trim carried out at a qualified specialist workshop.

RISK DUE TO COMPONENTS OF THE RESTRAINT SYSTEM WHICH HAVE ALREADY BEEN DEPLOYED
Mercedes-Benz recommends that you have the vehicle towed to a qualified specialist workshop after an accident.

WARNING
Risk of burns from hot airbag components

The airbag parts are hot after an airbag has been deployed.

- Do not touch the airbag parts.
- Have a deployed airbag replaced at a qualified specialist workshop as soon as possible.

WARNING
Risk of injury due to deployed airbag

A deployed airbag no longer offers any protection.

- Have the vehicle towed to a qualified specialist workshop in order to have the deployed airbag replaced.

Have deployed airbags replaced immediately.

WARNING
Risk of injury or death from deployed pyrotechnic seat belt tensioners

Pyrotechnic seat belt tensioners that have been deployed are no longer operational and are unable to perform their intended protective function.

- Therefore, have deployed pyrotechnic seat belt tensioners immediately replaced at a qualified specialist workshop.

Seat belts

Releasing the seat belts

- Press the release button in the seat belt buckle and guide the seat belt back with the seat belt tongue.

NOTE
Damage caused by trapping the seat belt

If an unused seat belt is not fully retracted, it may become trapped in the door or in the seat mechanism.

- Always ensure that an unused seat belt is fully retracted.

Airbags

Overview of airbags

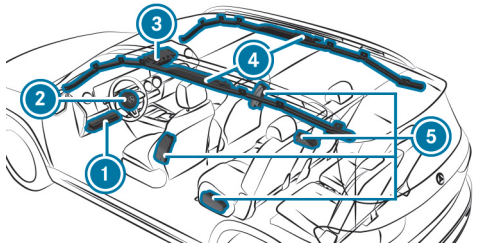

1. Knee airbag
2. Driver's airbag
3. Front passenger airbag
4. Window airbag
5. Side airbag

The installation location of an airbag is identified by the AIRBAG symbol.

Observe the information in "Overview of deployment situations" (⟶ page 130).

Back to Contents

Children in the vehicle

This interactive PDF works like a website – tap or click a button to jump straight to where you want to go.
You can return here at any time via the navigation bar at the top left.

Key facts in brief
Important safety notes
Suitable child restraint systems for the transport of children
Suitable seats for attaching child restraint systems
Securing the child restraint system
Child safety locks
Passive occupant presence reminder

Key facts in brief

Safely transporting children in the vehicle

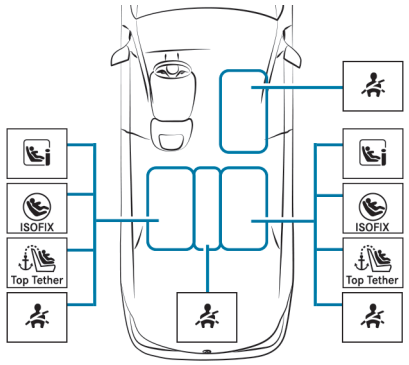

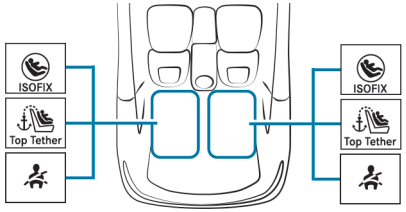

ALWAYS OBSERVE THE FOLLOWING WHEN TRANSPORTING CHILDREN:

- Never leave children unattended in the vehicle (⟶ page 142).
- Secure children younger than twelve or of a height up to 1.50 m on the seat (see illustration above) properly with a suitable and approved child restraint system (⟶ page 148) and secure small children in a rearward-facing child restraint system.
- Observe the child restraint system manufacturer's installation instructions.

LEFT/RIGHT REAR SEAT (PREFERRED SEATS)
SECOND SEAT ROW - PREFERRED FASTENING SYSTEM:

ISOFIX mounting brackets (⟶ page 153)

or i-Size mounting brackets (⟶ page 155)

and additionally fasten Top Tether if available (⟶ page 161).

SECOND SEAT ROW - ALTERNATIVE FASTENING SYSTEM:

Vehicle seat belt (⟶ page 162)

Additionally fasten Top Tether if recommended by the manufacturer of the child restraint system (⟶ page 161).

The following child restraint systems of the Universal category are approved: U, UF, i-U, IUF. Please see the other alternatives for use (⟶ page 153).

THIRD SEAT ROW –PREFERRED FASTENING SYSTEM:

ISOFIX/LATCH child seat anchor (⟶ page 153)

Additionally fasten Top Tether if present (⟶ page 161).

THIRD SEAT ROW –ALTERNATIVE FASTENING SYSTEM:

Vehicle seat belt (⟶ page 162)

FRONT PASSENGER SEAT
FASTENING SYSTEM:

Vehicle seat belt (⟶ page 162)

BE SURE TO OBSERVE:

- If the front passenger seat is occupied, ensure that the status of the front passenger airbag is correct for the current situation (⟶ page 124).

The following child restraint systems of the Universal category are approved: U(*), UF. Please see the other alternatives for use (⟶ page 155).

(*) rearward-facing child restraint systems only in conjunction with automatic airbag shutoff

REAR CENTRE SEAT (SECOND SEAT ROW ONLY)
FASTENING SYSTEM:

Vehicle seat belt (⟶ page 162)

The following belt-secured child restraint systems of the Universal category are approved: U, UF. Please see the other alternatives for use (⟶ page 155).

Important safety notes

Basic information

BE DILIGENT
Bear in mind that negligence when securing a child in the child restraint system may have serious consequences. Always be diligent in securing a child carefully before every journey.

Never allow babies and children to travel sitting on the lap of another vehicle occupant.

TO IMPROVE PROTECTION FOR CHILDREN YOUNGER THAN TWELVE YEARS OR UNDER 1.50 M IN HEIGHT, MERCEDES-BENZ URGENTLY RECOMMENDS THAT YOU OBSERVE THE FOLLOWING:

- Always secure the child in a child restraint system suitable for this Mercedes-Benz vehicle.
- The child restraint system must be appropriate to the age, weight and size of the child.
- The vehicle seat must be suitable for the child restraint system to be fitted:
  - ISOFIX mounting bracket: (⟶ page 153)
  - i-Size mounting bracket: (⟶ page 155)
  - Securing with the vehicle seat belt: (⟶ page 155)

Accident statistics show that children secured on the rear seats are generally safer than children secured on the front seats. For this reason, Mercedes-Benz strongly advises that you fit a child restraint system to a rear seat.

THE GENERIC TERM CHILD RESTRAINT SYSTEM

THE GENERIC TERM CHILD RESTRAINT SYSTEM IS USED IN THIS OWNER'S MANUAL. A CHILD RESTRAINT SYSTEM IS, FOR EXAMPLE:

- a baby car seat
- a rearward-facing child seat
- a forward-facing child seat
- a child booster seat – Mercedes-Benz recommends using a child booster seat **with** a seat backrest and seat belt guide.

OBSERVE LAWS AND LEGAL REQUIREMENTS
Always observe the legal requirements when using a child restraint system in the vehicle.

Make sure that the child restraint system is approved in accordance with the valid test specifications and guidelines. Further information can be obtained at a qualified specialist workshop. Mercedes-Benz recommends that you use a Mercedes-Benz Service Centre for this purpose.

SECURING SYSTEMS FOR CHILD RESTRAINT SYSTEMS IN THE VEHICLE

ONLY USE THE FOLLOWING SECURING SYSTEMS FOR CHILD RESTRAINT SYSTEMS:

- the ISOFIX or i-Size mounting brackets
- the vehicle's seat belt system
- the Top Tether anchorages

Simply attaching to the ISOFIX mounting brackets or i-Size mounting brackets on the vehicle can reduce the risk of fitting the child restraint system incorrectly.

When securing a child with the integrated seat belt of the ISOFIX or i-Size child restraint system, always comply with the permissible gross mass for the child and child restraint system (⟶ page 159).

Important warning stickers

ALWAYS SECURE A CHILD RESTRAINT SYSTEM CORRECTLY

WARNING
Risk of injury or death due to incorrect installation of the child restraint system

The child can then not be protected or restrained as intended.

- ► Be sure to comply with the manufacturer's installation instructions for the child restraint system and its correct use.
- ► Make sure that the entire base of the child restraint system always rests on the sitting surface of the seat.
- ► Never place objects (e.g. cushions) under or behind the child restraint system.
- ► Use child restraint systems only with the original cover designed for them.
- ► Always replace damaged covers with genuine covers.

- Always observe the vehicle-specific information.
  - Fitting an ISOFIX/LATCH or i-Size child restraint system on the rear seat (⟶ page 159).
  - Securing the child restraint system with the seat belt (⟶ page 162).
- Observe the warning labels in the vehicle interior and on the child restraint system.

WARNING
Risk of injury or death due to unsecured child restraint systems in the vehicle

If the child restraint system is incorrectly fitted or not secured, it can become detached.

The child cannot then be protected or restrained as intended.

The unused child restraint system can be become detached and strike vehicle occupants.

- ► Always comply with the manufacturer's installation instructions for the child restraint system and its correct use.
- ► Always fit child restraint systems correctly, even if they are transported unused in the vehicle.

DO NOT MODIFY THE CHILD RESTRAINT SYSTEM

WARNING
Risk of injury due to modifications to the child restraint system

The child restraint system can no longer function properly. This poses an increased risk of injury.

- Never modify a child restraint system.
- Only affix accessories which have been specially approved for this child restraint system by the child restraint system's manufacturer.

ONLY USE CHILD RESTRAINT SYSTEMS WHICH ARE IN PROPER WORKING CONDITION

WARNING
Risk of injury or death caused by the use of damaged child restraint systems

Child restraint systems or their retaining systems that have been subjected to stress in an accident may not be able to perform their intended protective function.

It may be the case that the child cannot be properly restrained.

- Always immediately replace child restraint systems that have been damaged or involved in an accident.
- Have the securing systems for the child restraint systems checked at a qualified specialist workshop before installing a child restraint system again.

AVOID DIRECT SUNLIGHT

WARNING
Risk of burns when the child seat is exposed to direct sunlight

If the child restraint system is exposed to direct sunlight or heat, parts could heat up.

Children could suffer burns from these parts, particularly on metallic parts of the child restraint system.

- Always make sure that the child restraint system is not exposed to direct sunlight.
- Protect the child restraint system with a blanket, for example.
- If the child restraint system has been exposed to direct sunlight, allow it to cool before securing a child into it.
- Never leave children unattended in the vehicle.

OBSERVE WHEN STOPPING OR PARKING

WARNING
Risk of fatalities due to exposure to extreme heat- or cold in the vehicle

If persons – and in particular children – are exposed to solar radiation, or the effects of heat or cold for prolonged periods of time, there is a risk of sustaining injuries or even fatalities!

- Never leave people – especially children – unattended in the vehicle.

WARNING
Risk of accident– and injury due to children left unattended in the vehicle

WHEN CHILDREN ARE LEFT UNATTENDED IN THE VEHICLE, THEY CAN BE EXPECTED IN PARTICULAR TO

- open doors, thereby endangering other persons or road users.
- get out and be struck by oncoming traffic.
- operate vehicle equipment and become trapped, for example.

IN ADDITION, THE CHILDREN COULD ALSO SET THE VEHICLE IN MOTION, FOR EXAMPLE BY:

- releasing the parking brake.
- changing the drive range.
- starting the vehicle.

► Never leave children unattended in the vehicle.

► When leaving the vehicle, always take the key with you and lock the vehicle.

► Keep the key out of reach of children.

Overview of warning stickers in the vehicle

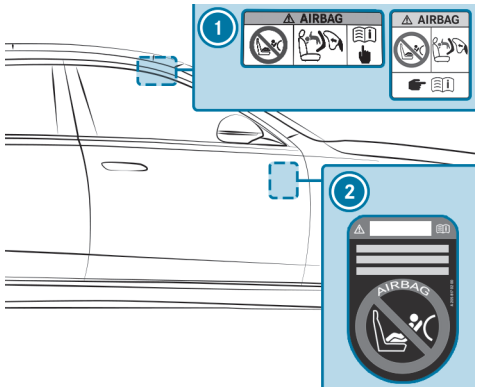

1 Front passenger airbag warning (on the front passenger sun visor) (⟶ page 145)

2 Vehicles without automatic front passenger airbag deactivation warning (visible when the front passenger door is open) (⟶ page 147)

Notes on rear-facing and front-facing child restraint systems on the front passenger seat

WARNING
Risk of injury or death from using a rearward-facing child restraint system when the front passenger airbag is enabled

If you secure a child in a rearward-facing child restraint system on the co-driver seat and the PASSENGER AIR BAG OFF indicator lamp is off, the front passenger airbag can deploy in the event of an accident.

The airbag could hit the child.

- Always make sure the front passenger airbag is disabled. The PASSENGER AIR BAG OFF indicator lamp must be lit.
- NEVER use a rearward-facing child restraint system on a seat with an ENABLED FRONT AIRBAG. This can result in the DEATH or SERIOUS INJURY of the CHILD.

Observe the specific instructions for the rearward-facing and forward-facing child restraint systems (⟶ page 158).

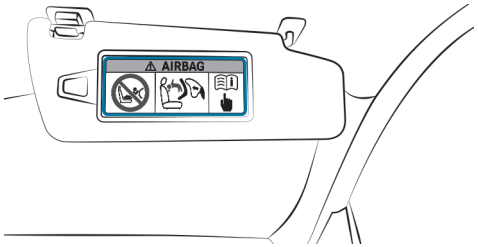

Warning notice on the front passenger sun visor

IF IT IS ABSOLUTELY NECESSARY TO INSTALL A CHILD RESTRAINT SYSTEM ON THE FRONT PASSENGER SEAT, ALWAYS OBSERVE THE FOLLOWING INFORMATION:

- The notes on automatic front passenger airbag deactivation (⟶ page 125).
- When using a rearward-facing child restraint system on the front passenger seat, the front passenger airbag must always be disabled. This is only the case if the PASSENGER AIR BAG OFF indicator lamp is lit continuously (⟶ page 124).
- The front passenger airbag is enabled when the PASSENGER AIR BAG OFF indicator lamp is not lit. The front passenger airbag may be deployed during an accident. In that case, do not use rearward-facing child restraint systems.

Information on the automatic front passenger airbag deactivation

If the front passenger seat is occupied, ensure, both before and during the journey, that the status of the front passenger airbag is correct for the current situation.

WARNING
Risk of injury or death due to objects between the seat surface and the child restraint system

Objects between the seat surface and the child restraint system could affect the function of the automatic co-driver airbag shutoff.

- Do not place any objects between the seat surface and the child restraint system.
- Make sure that the entire base of the child restraint system is always resting on the seat surface of the co-driver seat.
- The backrest of the forward-facing child restraint system must, as far as possible, be resting on the seat backrest of the co-driver seat.
- It is essential to comply with the child restraint system manufacturer's installation instructions.

When fitting a child restraint system to the front passenger seat, observe the vehicle-specific information (⟶ page 145).

REARWARD-FACING CHILD RESTRAINT SYSTEM ON THE FRONT PASSENGER SEAT

If a rearward-facing child restraint system is fitted on the front passenger seat, the front passenger airbag must be deactivated. The PASSENGER AIR BAG OFF indicator lamp must light up continuously (⟶ page 124).

WARNING
Risk of injury or death from using a rearward-facing child restraint system when the front passenger airbag is enabled

If you secure a child in a rearward-facing child restraint system on the co-driver seat and the PASSENGER AIR BAG OFF indicator lamp is off, the front passenger airbag can deploy in the event of an accident.

The airbag could hit the child.

- Always make sure the front passenger airbag is disabled. The PASSENGER AIR BAG OFF indicator lamp must be lit.
- NEVER use a rearward-facing child restraint system on a seat with an ENABLED FRONT AIRBAG. This can result in the DEATH or SERIOUS INJURY of the CHILD.

The front passenger airbag is enabled depending on the child restraint system and the stature of the child. The PASSENGER AIR BAG OFF indicator lamp does not light up.
The front passenger airbag may be deployed during an accident. If the front passenger airbag is in this status, no rearward-facing child restraint system may be fitted on the front passenger seat. Instead, fit the rearward-facing child restraint system on a suitable rear seat.

FORWARD-FACING CHILD RESTRAINT SYSTEM ON THE FRONT PASSENGER SEAT

If a forward-facing child restraint system is fitted on the front passenger seat, the front passenger airbag may be automatically enabled or disabled. The status of the front passenger airbag depends on the child restraint system and the stature of the child.

The PASSENGER AIR BAG OFF indicator lamp is either lit continuously, or it is not lit (⟶ page 124). Always observe the following information.

WARNING
Risk of injury or death caused by incorrect positioning of the child restraint system

IF YOU SECURE A CHILD IN A FORWARD-FACING CHILD RESTRAINT SYSTEM ON THE FRONT PASSENGER SEAT AND YOU POSITION THE FRONT PASSENGER SEAT TOO CLOSE TO THE COCKPIT, IN THE EVENT OF AN ACCIDENT, THE CHILD COULD:

- Come into contact with the vehicle interior if the PASSENGER AIR BAG OFF indicator lamp is lit, for example.
- Be struck by the airbag if the PASSENGER AIR BAG OFF indicator lamp is off.

► Always move the front passenger seat as far back as possible. In doing so, always make sure that the shoulder belt strap is correctly routed from the seat belt outlet of the vehicle to the shoulder belt guide on the child restraint system. The shoulder belt strap must be routed forwards and downwards from the seat belt outlet. If necessary, adjust the passenger seat accordingly.

► Always comply with the child restraint system manufacturer's installation instructions.

Notes on vehicles without automatic front passenger airbag deactivation

(⟶ page 144)Vehicles without automatic front passenger airbag deactivation have a special sticker which is visible when the front passenger door is opened.

MAKE SURE YOU OBSERVE THE FOLLOWING INFORMATION:

- Never fit a rearward-facing child restraint system to the front passenger seat.
- Notes on rear-facing and front-facing child restraint systems on the front passenger seat (⟶ page 145)

Suitable child restraint systems for the transport of children

Information on the advantage of a rearward-facing child restraint system

Transport a baby in a suitable rearward-facing child restraint system only. It is also preferable to transport a small child in a suitable rearward-facing child restraint system. In this case, the child sits in the opposite direction to the direction of travel and faces backwards.

Babies and small children have comparatively weak neck muscles in relation to the size and weight of their head. The risk of injury to the cervical spine during an accident can be reduced in a rearward-facing child restraint system.

Approval categories for child restraint systems

ONLY CHILD RESTRAINT SYSTEMS THAT MEET THE FOLLOWING UNECE STANDARDS ARE APPROVED FOR USE IN THE VEHICLE:

- UN-R44
- UN-R129

IDENTIFICATION OF THE CHILD RESTRAINT SYSTEM

THE FOLLOWING INFORMATION, FOREXAMPLE, IS AVAILABLE ON THE APPROVAL LABEL ON THE CHILD RESTRAINT SYSTEM:

- Approval category
- Child weight group
- Authorisation number
- Child restraint system size class

Approval categories under UN-R44



Example of an approval label

- **Universal:** child restraint systems in the "Universal" category are approved for installation in vehicles. Following overviews of the suitability of seats for securing child restraint systems, they can be used on seats labelled U, UF or IUF.

  The identification IUF refers to ISOFIX/LATCH child restraint systems in the "Universal" category. These child restraint systems must be additionally secured using Top Tether or support points.
- **Semi-Universal:** child restraint systems in the "Semi-Universal" category may only be used if the vehicle and vehicle seat are listed in the child restraint system manufacturer's vehicle model list.

- **Vehicle-specific:** child restraint systems in the "Vehicle-specific" category may only be used if the vehicle and vehicle seat are listed in the child restraint system manufacturer's vehicle model list.

Approval categories under UN-R129

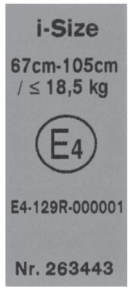

Example of an approval label

- **i-Size** child restraint systems and booster seats with seat backrest: suitable for attachment to i-Size mounting brackets. They can be used on seats marked i-U.

  Child restraint systems in this category can also be attached to ISOFIX bars if approved by the child restraint system manufacturer. i-Size booster seats with backrest can be used on seats marked U if the seat is approved for category B2/B3.
- Belted child restraint systems and belted booster seats without seat backrest in the **Universal** category: suitable for attachment to seats marked U.
- **Vehicle-specific** child restraint systems (ISOFIX or belted attachment as well as child booster seats with and without seat backrest): suitable for attachment to seats marked i-U or U if approved by the child restraint system manufacturer.

PLEASE OBSERVE SUITABILITY OF THE VEHICLE SEATS

- Suitability of seats for attaching ISOFIX/LATCH child restraint systems (⟶ page 153)
- Suitability of seats for securing i-Size child restraint systems (⟶ page 155).
- Suitability of seats for fastening belt-secured child restraint systems (⟶ page 155)

Overview of recommended child restraint systems

Further information on the correct child restraint system can be obtained at a qualified specialist workshop. Mercedes-Benz recommends that you use a Mercedes-Benz Service Centre for this purpose.

ATTACHMENT WITH ISOFIX

WEIGHT GROUP 0+ (UP TO 13 KG AND UP TO APPROXIMATELY 15 MONTHS)

Type[1]	BABY SAFE plus (including base station)
Size category	E
Approval	E1 04 301 146
Order number[2]	B6 6 86 8224
1 Manufacturer: Britax Römer	2 with colour code 9H95

WEIGHT CATEGORY I (9 TO 18 KG AND FROM APPROX. 9 MONTHS TO 4 YEARS)

Type[1]	DUO plus
Size category	B1
Approval	E1 04 301 133
Order number[2]	A 000 970 43 02
1 Manufacturer: Britax Römer	2 with colour code 9H95

ATTACHMENT WITH I-SIZE (R129 CHILD RESTRAINT SYSTEMS)

WEIGHT UP TO 13 KG, SIZE 40 TO 83 CM AND AGE FROM BIRTH TO APPROX. 15 MONTHS

Type[1]	Baby Safe 3 i-Size
Size category	R2
Approval	E1*129R03/04*0060*02
Order number	A 000 970 68 02
Order number FlexBase iSense	A 000 970 73 02
1 Manufacturer: Britax Römer	

WEIGHT UP TO 18 KG, SIZE 61 TO 105 CM AND AGE FROM APPROX. 3 MONTHS TO 4 YEARS

Type[1]	Dualfix 3 i-Size
Size category	F2X/R2
Approval	E1*129R03/04*0060*02
Order number	A 000 970 93 02
Order number FlexBase iSense	A 000 970 73 02
1 Manufacturer: Britax Römer	

WEIGHT 15 TO 36 KG, SIZE 100 TO 150 CM AND AGE FROM APPROX. 3.5 TO 12 YEARS (KIDFIX M I-SIZE)

Type[1]	KIDFIX M i-Size
Size category	B2
Approval	E1*129R03/04*0061*02
Order number	A 000 970 89 02
1 Manufacturer: Britax Römer	

WEIGHT 15 TO 36 KG, SIZE 100 TO 150 CM AND AGE FROM APPROX. 3.5 TO 12 YEARS (AMG KIDFIX M I-SIZE)

Type[1]	AMG KIDFIX M i-Size
Size category	B2
Approval	E1*129R03/04*0061*02
Order number	A 000 970 91 02
1 Manufacturer: Britax Römer	

ATTACHMENT WITH THE SEAT BELT OF THE VEHICLE SEAT

WEIGHT CATEGORY 0 (UP TO 10 KG AND APPROX. 6 MONTHS) AND WEIGHT CATEGORY 0+ (UP TO 13 KG AND APPROX. 15 MONTHS)

Type[1]	BABY SAFE plus II
Approval	E1 04 301 146
Order number[2]	A 000 970 38 02
1 Manufacturer: Britax Römer	2 with colour code 9H95

R129 CHILD RESTRAINT SYSTEMS (WEIGHT UP TO 13 KG, SIZE 40 TO 83 CM AND AGE FROM BIRTH TO APPROX. 15 MONTHS)

Type[1]	Baby Safe 3 i-Size
Size category	R2
Approval	E1*129R03/04*0060*02
Order number	A 000 970 68 02
1 Manufacturer: Britax Römer	

WEIGHT CATEGORY I (9 TO 18 KG AND FROM APPROX. 9 MONTHS TO 4 YEARS)

Type[1]	DUO plus
Approval	E1 04 301 133
Order number[2]	A 000 970 43 02
1 Manufacturer: Britax Römer	2 with colour code 9H95

WEIGHT CATEGORY II/III (15 TO 36 KG AND FROM APPROX. 3 TO 12 YEARS) (KIDFIX XP)

Type[1]	KIDFIX XP
Approval	E1 04 301 304
Order number[2]	A 000 970 49 02
1 Manufacturer: Britax Römer	2 with colour code 9H95

WEIGHT CATEGORY II/III (15 TO 36 KG AND FROM APPROX. 3 TO 12 YEARS) (AMG KIDFIX XP)

Type[1]	AMG KIDFIX XP
Approval	E1 04 301 304
Order number[2]	A 000 970 33 02
1 Manufacturer: Britax Römer	2 with colour code 9H95

R129 CHILD RESTRAINT SYSTEMS (WEIGHT 15 TO 36 KG, SIZE 100 TO 150 CM AND AGE FROM APPROX. 3.5 TO 12 YEARS) (KIDFIX M I-SIZE)

Type[1]	KIDFIX M i-Size
Size category	B2
Approval	E1*129R03/04*0061*02
Order number	A 000 970 89 02
1 Manufacturer: Britax Römer	

R129 CHILD RESTRAINT SYSTEMS (WEIGHT 15 TO 36 KG, SIZE 100 TO 150 CM AND AGE FROM APPROX. 3.5 TO 12 YEARS) (AMG KIDFIX M I-SIZE)

Type[1]	AMG KIDFIX M i-Size
Size category	B2
Approval	E1*129R03/04*0061*02
Order number	A 000 970 91 02

1 Manufacturer: Britax Römer

Suitable seats for attaching child restraint systems

Overview of suitability of the seats for attaching ISOFIX/LATCH child restraint systems

ISOFIX IS A STANDARDISED SECURING SYSTEM FOR SPECIALLY DESIGNED CHILD RESTRAINT SYSTEMS.

The symbol indicates seats suitable for attaching an ISOFIX child restraint system in accordance with UN R44 (⟶ page 148).

ISOFIX child restraint systems can also be installed on seats with i-Size markings (⟶ page 155).

Attach only ISOFIX child restraint systems that are approved in accordance with UN R44 as per the following ISOFIX tables.

CARRY COT FOR SECOND AND THIRD ROWS OF SEATS

Size class – Equipment	Left/right rear seat
F – ISO/L1	X
G – ISO/L2	X

X Not suitable for an ISOFIX child restraint system in this weight group and/or size class.

WEIGHT GROUP 0 (UP TO 10 KG AND UP TO APPROXIMATELY 6 MONTHS) FOR SECOND AND THIRD ROWS OF SEATS

Size class – Equipment	Left/right rear seat
E – ISO/R1	IL

IL Suitable for ISOFIX child restraint systems according to the table in "Overview of the recommended child restraint systems", or if the vehicle and the seat are listed on the child restraint system manufacturer's vehicle model list.

WEIGHT GROUP 0+ (UP TO 13 KG AND UP TO APPROXIMATELY 15 MONTHS) FOR SECOND ROW OF SEATS

Size class – Equipment	Left/right rear seat
E – ISO/R1	IL
D – ISO/R2, ISO/R2X	IL
C – ISO/R3	IL (1)

IL Suitable for ISOFIX child restraint systems according to the table in "Overview of the recommended child restraint systems", or if the vehicle and the seat are listed on the child restraint system manufacturer's vehicle model list.

(1) When using a child restraint system of size class (ISO/R3), move the front seat into the highest position. Make sure that the seat backrest of the front seat does not rest against the child restraint system.

WEIGHT GROUP 0+ (UP TO 13 KG AND UP TO APPROXIMATELY 15 MONTHS) FOR THIRD ROW OF SEATS

Size class – Equipment	Left/right rear seat
E – ISO/R1	IL
D – ISO/R2, ISO/R2X	X
C – ISO/R3	X

IL Suitable for ISOFIX child restraint systems according to the table in "Overview of the recommended child restraint systems", or if the vehicle and the seat are listed on the child restraint system manufacturer's vehicle model list.

X Not suitable for an ISOFIX child restraint system in this weight group and/or size class.

WEIGHT GROUP 1 (9–18 KG AND APPROXIMATELY 9 MONTHS TO 4 YEARS) FOR SECOND ROW OF SEATS

Size class – Equipment	Left/right rear seat
D – ISO/R2, ISO/R2X	IL
C – ISO/R3	IL (1)
B – ISO/F2	IUF
B1 – ISO/F2X	IUF
A – ISO/F3	IUF

IL Suitable for ISOFIX child restraint systems according to the table in "Overview of the recommended child restraint systems", or if the vehicle and the seat are listed on the child restraint system manufacturer's vehicle model list.

IUF Suitable for forward-facing ISOFIX child restraint systems of the "Universal" category in this weight group.

(1) When using a child restraint system of size class (ISO/R3), move the front seat into the highest position. Make sure that the seat backrest of the front seat does not rest against the child restraint system.

WEIGHT GROUP 1 (9–18 KG AND APPROXIMATELY 9 MONTHS TO 4 YEARS) FOR THIRD ROW OF SEATS

Size class – Equipment	Left/right rear seat
D – ISO/R2, ISO/R2X	X
C – ISO/R3	X
B – ISO/F2	IUF
B1 – ISO/F2X	IUF
A – ISO/F3	IUF

X Not suitable for an ISOFIX child restraint system in this weight group and/or size class.

IUF Suitable for forward-facing ISOFIX child restraint systems of the "Universal" category in this weight group.

Overview of suitability of the seats for attaching i-Size child restraint systems

I-SIZE IS A STANDARDISED SECURING SYSTEM FOR SPECIALLY DESIGNED CHILD RESTRAINT SYSTEMS.

i-Size child restraint systems can be attached to a seat with the i-Size marking (⟶ page 148).

Child restraint systems that are approved in accordance with the following i-Size table may be attached.

LEFT AND RIGHT REAR SEAT (SECOND ROW OF SEATS ONLY)

i-Size child restraint systems (ISO/R1, ISO/R2, ISO/R2X, ISO/R3, ISO/F2, ISO/F2X, ISO/F3, ISO/B2, ISO/B3)	i-U

i-U Suitable for forward-facing and rearward-facing i-Size child restraint systems in the "Universal" category.

FRONT PASSENGER SEAT

i-Size child restraint systems (ISO/R1, ISO/R2, ISO/R2X, ISO/R3, ISO/F2, ISO/F2X, ISO/F3, ISO/B2, ISO/B3)	X

X Not suitable for an i-Size child restraint system in the "Universal" category.

REAR SEATS (SECOND SEAT ROW)

Weight category 0: to 10 kg	
Left/right rear seat	U, L
Rear centre seat[1]	U, L
Weight category 0+: to 13 kg	
Left/right rear seat	U, L
Rear centre seat[1]	U, L
Weight category I: 9 to 18 kg	
Left/right rear seat	U, L
Rear centre seat[1]	U, L
Weight category II: 15 to 25 kg	
Left/right rear seat	U, L
Rear centre seat[1]	U, L
Weight category III: 22 to 36 kg	
Left/right rear seat	U, L
Rear centre seat[1]	U, L

1 Child restraint systems with a support leg are not suitable for this seat.

Overview on the suitability of seats for fastening belt-secured child restraint systems

Suitability of seats for fastening belt-secured child restraint systems

U Suitable for child restraint systems of the "Universal" category in this weight category.

L Suitable for semi-universal child restraint systems according to the table in "Recommended child restraint systems", or if the vehicle and the seat are listed in the child restraint system manufacturer's vehicle model list.

REAR SEATS (THIRD SEAT ROW)

Weight category 0: to 10 kg	
Left/right rear seat	U, L
Weight category 0+: to 13 kg	
Left/right rear seat	U, L
Weight category I: 9 to 18 kg	
Left/right rear seat	U, L
Weight category II: 15 to 25 kg	
Left/right rear seat	U, L
Weight category III: 22 to 36 kg	
Left/right rear seat	U, L

U Suitable for child restraint systems of the "Universal" category in this weight category.

L Suitable for semi-universal child restraint systems according to the table in "Recommended child restraint systems", or if the vehicle and the seat are listed in the child restraint system manufacturer's vehicle model list.

NOTES ON CHILD RESTRAINT SYSTEMS ON THE FRONT PASSENGER SEAT

- If it is absolutely necessary for you to fit a child restraint system to the front passenger seat, be sure to observe the information on child restraint systems on the front passenger seat (⟶ page 145).
- Observe the specific instructions for the rearward-facing and forward-facing child restraint systems. If the front passenger seat is occupied, ensure, both before and during the journey, that the status of the front passenger airbag is correct for the current situation (⟶ page 124).

FRONT PASSENGER SEAT

Weight category 0: to 10 kg	
Front passenger airbag enabled[1]	X
Front passenger airbag disabled[1, 2]	U, L
Weight category 0+: to 13 kg	
Front passenger airbag enabled[1]	X
Front passenger airbag disabled[1, 2]	U, L
Weight category I: 9 to 18 kg	
Front passenger airbag enabled[1]	UF, L
Front passenger airbag disabled[1, 2]	U, L
Weight category II: 15 to 25 kg	
Front passenger airbag enabled[1]	UF, L
Front passenger airbag disabled[1, 2]	U, L
Weight category III: 22 to 36 kg	
Front passenger airbag enabled[1]	UF, L

Front passenger airbag disabled[1, 2]	U, L

1 Adjust the seat cushion inclination so that the front edge of the seat cushion is in the highest position and the rear edge of the seat cushion is in the lowest position.

2 The vehicle is equipped with automatic front passenger airbag deactivation. The PASSENGER AIRBAG OFF indicator lamp must be on.

X Not suitable for children in this weight category.

U Suitable for child restraint systems of the "Universal" category in this weight category.

L Suitable for semi-universal child restraint systems according to the table in "Recommended child restraint systems", or if the vehicle and the seat are listed in the child restraint system manufacturer's vehicle model list.

UF Suitable for forward-facing child restraint systems of the "Universal" category in this weight category.

Securing the child restraint system

Adjusting the seat correctly

WHEN FITTING A CHILD RESTRAINT SYSTEM ON THE LEFT OR RIGHT REAR SEAT, ALWAYS OBSERVE THE FOLLOWING:

- Make sure that the child's feet do not touch the front seat. If necessary, move the front seat slightly forwards.

If the head restraint of the child restraint system cannot be fully extended when it is installed in the vehicle, this will result in restrictions on the maximum size setting for certain child restraint systems. Observe the child restraint system manufacturer's installation instructions.

ⓘ Contact with the roof when the head restraint is fully extended and locked in place will not result in any restrictions on use.

ALSO OBSERVE THE FOLLOWING WHEN FITTING AN ISOFIX OR I-SIZE CHILD RESTRAINT SYSTEM:

- **When using a rearward-facing child restraint system on a rear seat:** adjust the front seat so that it does not touch the child restraint system.
- **When using a forward-facing child restraint system with integrated child seat belt:** adjust the head restraint of the respective seat so that it does not push the child restraint system forwards. If necessary, the respective head restraint can be removed. In addition, the seat backrest of the child restraint system must lie as flat as possible against the backrest of the vehicle seat. After the child restraint system has been removed, replace the vehicle head restraint immediately and adjust it correctly.
- The child restraint system must not be put under strain between the roof and the seat cushion and/or be fitted facing the wrong direction. Where possible, adjust the seat cushion inclination accordingly.
- Adjust the vehicle head restraints so that the child restraint system is not put under strain by the head restraint.

WHEN FITTING A BELT-SECURED CHILD RESTRAINT SYSTEM, ALSO OBSERVE THE FOLLOWING:

- **When using a rearward-facing child restraint system on a rear seat:** adjust the front seat so that it does not touch the child restraint system.
- **When using a forward-facing child restraint system with integrated child seat belt:** adjust the head restraint of the respective seat so that it does not push the child restraint system forwards. If necessary, the respective head restraint can be removed. In addition, the seat backrest of the child restraint system must lie as flat as possible against the backrest of the vehicle seat. After the child restraint system has been removed, replace the vehicle head restraint immediately and adjust it correctly.
- The backrest of the forward-facing child restraint system must, as far as possible, be resting on the seat backrest of the rear seat.

- The child restraint system must not be put under strain between the roof and the seat cushion and/or be fitted facing the wrong direction. Where possible, adjust the seat cushion inclination accordingly.
- Adjust the vehicle head restraints so that the child restraint system is not put under strain by the head restraint.
- Make sure that the child's feet do not touch the front seat. If necessary, move the front seat slightly forwards.

DEPENDING ON THE VEHICLE EQUIPMENT, ALWAYS OBSERVE THE FOLLOWING WHEN FITTING A BELT-SECURED CHILD RESTRAINT SYSTEM ON THE FRONT PASSENGER SEAT:

- Observe the notes on rearward-facing and forward-facing child restraint systems on the front passenger seat (⟶ page 145).
- **When using a forward-facing child restraint system integrated child seat belt:** remove the head restraint from the front passenger seat, if possible. After the child restraint system has been removed, immediately replace the head restraint and adjust it correctly.
- The backrest of the forward-facing child restraint system must, as far as possible, be resting against the seat backrest of the front passenger seat.
- The child restraint system must not be put under strain between the roof and the seat cushion and/or be fitted facing the wrong direction.
- Adjust the vehicle head restraints so that the child restraint system is not put under strain by the head restraint.
- Never place objects (e.g. cushions) under or behind the child restraint system.
- Set the front passenger seat as far back as possible and move the seat into the highest position if possible. Always make sure that the shoulder belt strap is correctly routed from the seat belt outlet of the vehicle to the shoulder belt guide on the child restraint system. The shoulder belt strap must be routed forwards from the seat belt outlet and, where possible, downwards to the child restraint system.
- Fully retract the seat cushion length adjustment.
- Adjust the seat cushion inclination so that the front edge of the seat cushion is in the highest position and the rear edge of the seat cushion is in the lowest position.
- Set the seat backrest to the most vertical position possible.

Fitting an ISOFIX/LATCH or i-Size child restraint system

WARNING
Risk of accident if the rear bench seat, rear seat and seat backrest are not engaged

The rear bench seat, rear seat and seat backrest may fold forwards, even while the vehicle is in motion.

- As a result, the vehicle occupant will be pressed into the seat belt with increased force. The seat belt will not be able to protect as intended and could cause additional injury.
- Objects or loads in the boot or load compartment cannot be restrained by the seat backrest.

- Make sure that the rear bench seat, the rear seat and the seat backrest are engaged before every trip.

If the rear seat backrest is not engaged and locked in place, the red lock verification indicator will be visible.

WARNING
Risk of injury or death if the permissible gross mass of the child and child restraint system together is exceeded.

Too much load may be placed on the ISOFIX or i-Size child restraint systems and the child may not be restrained correctly in the event of an accident, for example.

► If the child is secured in an ISOFIX or i-Size child restraint system with integrated seat belts, the total mass of the child and child restraint system must not exceed 33 kg.

ALWAYS OBSERVE THE INFORMATION ON THE MASS OF THE CHILD RESTRAINT SYSTEM:

- in the installation instructions and Owner's Manual provided by the manufacturer of the child restraint system used
- on a label on the child restraint system, if present

Regularly check that the permissible gross mass of the child and child restraint system is still being adhered to.

WHEN FITTING A CHILD RESTRAINT SYSTEM, ALSO OBSERVE THE FOLLOWING:

☑ Always observe the area of use and the suitability of the seats for attaching a child restraint system.

ISOFIX mounting brackets (⟶ page 153)

or

i-Size mounting brackets (⟶ page 155)

► Before every journey always ensure that the ISOFIX/LATCH child restraint system or the i-Size child restraint system is engaged in both mounting brackets on the vehicle.

NOTE
Damage to the seat belt for the centre seat during installation of the child restraint system

► Make sure that the seat belt is not trapped.

REAR BENCH SEAT (SECOND SEAT ROW):

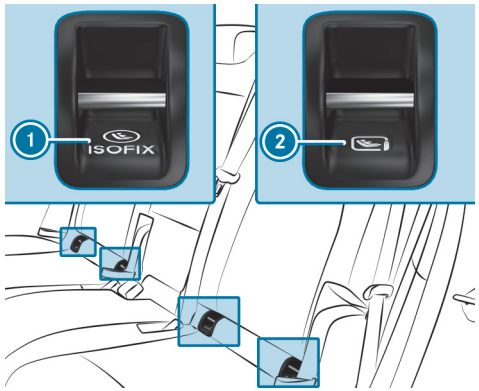

① ISOFIX mounting bracket
② i-Size mounting brackets

► Attach the ISOFIX/LATCH or i-Size child restraint system to both mounting brackets in the vehicle.

VEHICLES WITH A THIRD SEAT ROW:

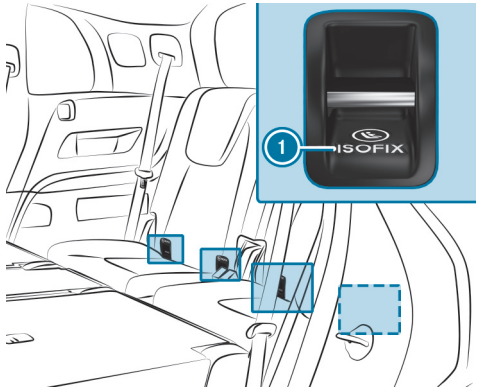

- Attach the ISOFIX/LATCH child restraint system to both ISOFIX mounting brackets (1) in the vehicle.

Fastening a Top Tether

WARNING
Risk of injury or death if the rear seat backrests are not locked after Top Tether belts are fitted

The rear seat backrests may fold forwards when you are driving.

As a result, child restraint systems will no longer be able to perform their intended protective function. This may also cause additional injuries.

- Always lock rear seat backrests after fitting Top Tether belts.
- Observe the lock verification indicator.

If the rear seat backrest is not engaged and locked in place, the red lock verification indicator will be visible.
If the child restraint system is equipped with a Top Tether belt:

The risk of injury may be reduced by Top Tether. The Top Tether belt enables an additional connection between the child restraint system attached with ISOFIX or i-Size and the vehicle.

The Top Tether anchorages for the second row of seats are located on the rear side of the two outer rear seats on the second row of seats. For the third row of seats, use the Top Tether anchorage on the rear side of the seat backrest on the third row of seats.

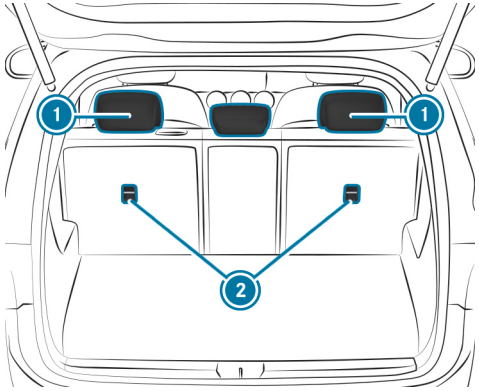

Second row of seats

- If necessary, slide head restraint (1) upwards (→ page 219).
- Fit the ISOFIX/LATCH or i-Size child restraint system with Top Tether. Comply with the child restraint system manufacturer's installation instructions.

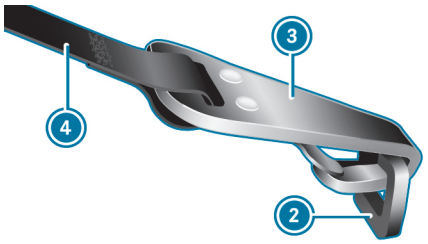

- ► Guide Top Tether belt (4) under head restraint (1) between the two head restraint bars.
- ► Hook Top Tether hook (3) into Top Tether anchorage (2) without twisting.
- ► Tension Top Tether belt (4). Comply with the child restraint system manufacturer's installation instructions.
- ► If necessary, slide head restraint (1) downwards (⟶ page 219). Make sure that you do not interfere with the correct routing of Top Tether belt (4).

Fastening the child restraint system with the seat belt

WARNING
Risk of accident if the rear bench seat, rear seat and seat backrest are not engaged

The rear bench seat, rear seat and seat backrest may fold forwards, even while the vehicle is in motion.

- As a result, the vehicle occupant will be pressed into the seat belt with increased force. The seat belt will not be able to protect as intended and could cause additional injury.
- Objects or loads in the boot or load compartment cannot be restrained by the seat backrest.

► Make sure that the rear bench seat, the rear seat and the seat backrest are engaged before every trip.

If the rear seat backrest is not engaged and locked in place, the red lock verification indicator will be visible.

► For a child restraint system of the category "Universal" or "Semi-Universal" ensure that this is approved for the vehicle seat.

► Fit the child restraint system.

The entire base of the child restraint system must always rest on the sitting surface of the seat.

- Always make sure that the shoulder belt strap is correctly routed from the seat belt outlet of the vehicle to the shoulder belt guide on the child restraint system.

  The shoulder belt strap must be routed forwards from the seat belt outlet and, where possible, downwards to the child restraint system.

- **When fitting on the rear seat:** also secure Top Tether, if present (⟶ page 161).

- **When fitting on the front passenger seat:** if necessary, adjust the seat belt outlet and the front passenger seat appropriately.

Child safety locks

Activating/deactivating the child safety lock for the rear doors

WARNING
Risk of accident– and injury due to children left unattended in the vehicle

WHEN CHILDREN ARE LEFT UNATTENDED IN THE VEHICLE, THEY CAN BE EXPECTED IN PARTICULAR TO

- open doors, thereby endangering other persons or road users.
- get out and be struck by oncoming traffic.
- operate vehicle equipment and become trapped, for example.

IN ADDITION, THE CHILDREN COULD ALSO SET THE VEHICLE IN MOTION, FOR EXAMPLE BY:

- releasing the parking brake.
- changing the drive range.
- starting the vehicle.

► Never leave children unattended in the vehicle.

► When leaving the vehicle, always take the key with you and lock the vehicle.

► Keep the key out of reach of children.

WARNING
Risk of fatalities due to exposure to extreme heat- or cold in the vehicle

If persons – and in particular children – are exposed to solar radiation, or the effects of heat or cold for prolonged periods of time, there is a risk of sustaining injuries or even fatalities!

► Never leave people – especially children – unattended in the vehicle.

WARNING
Risk of accident and injury due to children left unattended in the vehicle

IF CHILDREN ARE TRAVELLING IN THE VEHICLE, THEY COULD, IN PARTICULAR:

- open doors, thereby endangering other persons or road users.
- get out and be struck by oncoming traffic.
- operate vehicle equipment and become trapped, for example.

► Always activate the installed child safety locks if children are travelling in the vehicle.

► Never leave children unattended in the vehicle.

► When leaving the vehicle, always take the key with you and lock the vehicle.

Vehicles in the United Kingdom: observe the important safety notes in the section "Notes on the additional door lock" at all times.

There are child safety locks for the rear doors and the rear side windows. The child safety locks on the rear doors secure each door separately. The doors can no longer be opened from the inside.

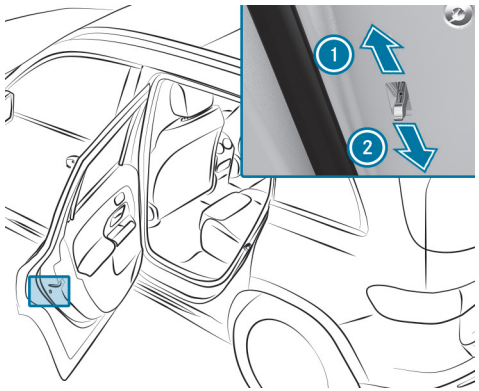

► Press the lever in the direction indicated by the arrow 1 (activate) or 2 (deactivate).

► Check the functionality of the child safety lock.

Activating/deactivating the child safety lock for the rear side windows

WARNING
Risk of accident– and injury due to children left unattended in the vehicle

WHEN CHILDREN ARE LEFT UNATTENDED IN THE VEHICLE, THEY CAN BE EXPECTED IN PARTICULAR TO

- open doors, thereby endangering other persons or road users.
- get out and be struck by oncoming traffic.
- operate vehicle equipment and become trapped, for example.

IN ADDITION, THE CHILDREN COULD ALSO SET THE VEHICLE IN MOTION, FOR EXAMPLE BY:

- releasing the parking brake.
- changing the drive range.
- starting the vehicle.

► Never leave children unattended in the vehicle.

► When leaving the vehicle, always take the key with you and lock the vehicle.

► Keep the key out of reach of children.

WARNING
Risk of fatalities due to exposure to extreme heat- or cold in the vehicle

If persons – and in particular children – are exposed to solar radiation, or the effects of heat or cold for prolonged periods of time, there is a risk of sustaining injuries or even fatalities!

► Never leave people – especially children – unattended in the vehicle.

WARNING
Risk of accident and injury due to children left unattended in the vehicle

IF CHILDREN ARE TRAVELLING IN THE VEHICLE, THEY COULD, IN PARTICULAR:

- open doors, thereby endangering other persons or road users.
- get out and be struck by oncoming traffic.
- operate vehicle equipment and become trapped, for example.

► Always activate the installed child safety locks if children are travelling in the vehicle.

► Never leave children unattended in the vehicle.

► When leaving the vehicle, always take the key with you and lock the vehicle.

Vehicles for the United Kingdom: observe the important safety notes in the "Notes on the additional door lock" section.

There are child safety locks for the rear doors and the rear side windows.

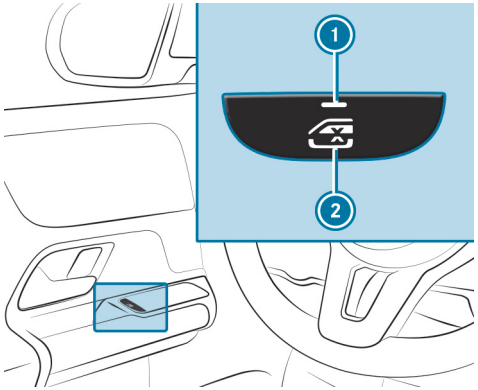

► **To activate/deactivate:** press the button (2).

THE REAR SIDE WINDOW CAN BE OPENED OR CLOSED AS FOLLOWS:

- The indicator lamp (1) is lit: via the switch on the driver's door
- The indicator lamp (1) is off: via the switch on the corresponding rear door or driver's door

Passive occupant presence reminder

Function of the passive occupant presence reminder

The passive occupant presence reminder can help to remind you about a child who may have been forgotten in the rear compartment of the vehicle. It activates and deactivates automatically when the rear door is open for an extended period of time and a child which the system presumes to be present could enter or exit the vehicle.

When the vehicle is switched off, the Do not leave persons or animals in the vehicle message appears on the driver display if the system was already automatically activated.

You can permanently deactivate the function in the multimedia system (→ page 168). When the system is deactivated, the indicator lamp in the driver display lights up.

Switching the passive occupant presence reminder on or off in the multimedia system

Multimedia system:

Settings » Vehicle » Occupant protection

- Activate or deactivate the function.

The function is permanently switched on or off.

Back to Contents

Opening and closing

This interactive PDF works like a website – tap or click a button to jump straight to where you want to go.
You can return here at any time via the navigation bar at the top left.

Key
Doors
Load compartment
Side windows
Sliding sunroof
Anti-theft protection

Key

Overview of key functions

WARNING
Accident- and risk of injury with unsupervised children in the vehicle

IF YOU LEAVE CHILDREN UNATTENDED IN THE VEHICLE, THEY CAN IN PARTICULAR

- Open doors and thereby endanger other persons or road users.
- get out of the car and are hit by traffic.
- Operate vehicle equipment and become trapped, forexample.

IN ADDITION, THE CHILDREN COULD ALSO SET THE VEHICLE IN MOTION, FOR EXAMPLEBY:

- releasing the parking brake.
- change the gearbox setting.
- start the vehicle.

► Never leave children unattended in the vehicle.

► When leaving the vehicle, always take the SmartKey with you and lock the vehicle.

► Keep the key out of reach of children.

NOTE
Damage to the key caused by magnetic fields

► Keep the key away from strong magnetic fields.

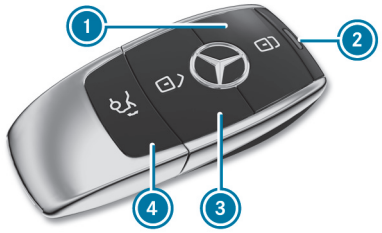

Vehicle key
1 Locking
2 Indicator lamp
3 Unlocking
4 Opens/closes the tailgate

If indicator lamp 2 does not light up after pressing the [🔓] or [🔒] button, the battery is weak or possibly discharged. Replace the battery as soon as possible.

Replace the key battery (→ page 173).

THE KEY LOCKS AND UNLOCKS THE FOLLOWING COMPONENTS:

- Doors
- Socket flap
- Tailgate

If the vehicle is not opened within approximately 40 seconds after unlocking, it locks again. Anti-theft protection is primed again.

Do not keep the key together with electronic devices or metal objects. This can affect the key's functionality.

Activating/deactivating the acoustic locking verification signal

Multimedia system:

Settings » Vehicle » Open/close

- Switch the Acoustic lock on or off.

Please note:
The selected setting for the acoustic locking verification signal must comply with the relevant national road traffic rules. In some countries, including Germany, using the acoustic locking verification signal is prohibited by traffic laws (in accordance with §16 Para. 1 and §30 Para. 1 of the German national road traffic regulations). The driver of the vehicle must comply with these regulations. In countries where the use of this function is prohibited, this function is not activated in the vehicle and must not be activated.

Changing the unlocking settings

POSSIBLE UNLOCKING FUNCTIONS OF THE KEY:

- Central unlocking
- Unlocking the driver's door and socket flap

- **To switch between settings:** press the buttons and simultaneously for approximately six seconds until the indicator lamp flashes twice.

OPTIONS IF THE UNLOCKING FUNCTION FOR THE DRIVER'S DOOR AND SOCKET FLAP HAS BEEN SELECTED:

- **To unlock the vehicle centrally:** press the button twice.
- **Vehicles with KEYLESS-GO:** if you touch the inner surface of the door handle on the driver's door, only the driver's door and the socket flap are unlocked.

Deactivating the key function

Vehicles with KEYLESS-GO: if you deactivate the key function, the KEYLESS-GO functions are also deactivated. Access or drive authorisation via KEYLESS-GO is then no longer possible with that key. Activate the function of the key so that all functions using the key are available once again.

You can also deactivate the key's function to reduce the key's energy consumption if you do not use the vehicle or a key for an extended period of time.

- Press and hold the key button .

- With the button pressed, immediately press the key button twice in quick succession.
  The indicator lamp of the key lights up once briefly, and then again for longer.

YOU HAVE THE FOLLOWING OPTIONS TO REACTIVATE THE KEY:

- Press any button on the key.
- Start the vehicle with the key in the centre console storage compartment (⟶ page 293).

Removing/inserting the emergency key

REMOVING THE EMERGENCY KEY

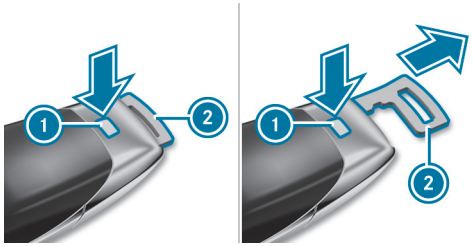

- Press the release knob (1).
  The emergency key (2) is pushed out slightly.
- Pull out the emergency key (2) until it engages in the intermediate position.

Depending on the vehicle's equipment, the intermediate position may not be available.

- Press the release knob (1) again and fully remove the emergency key (2).

INSERTING THE EMERGENCY KEY

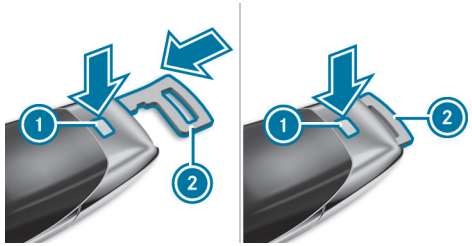

- Press the release knob (1).
- Insert the emergency key (2) to the intermediate position, or fully until it engages.

You can use the emergency key (2) to attach the key to a key ring.
Depending on the respective configuration, it is possible to engage the emergency key (2) in the intermediate position.

Replacing the key battery

DANGER
Risk of fatal injury due to swallowing batteries

Batteries contain toxic and corrosive substances. If batteries are swallowed or otherwise enter the body, severe internal burns can occur within two hours.

There is a risk of fatal injury!

- Keep the batteries out of the reach of children.
- If the lid and/or the battery compartment do not close securely, stop using the key and keep it away from children.
- If batteries are swallowed or otherwise enter the body, seek immediate medical attention.

ENVIRONMENTAL NOTE
Environmental damage due to improper disposal of batteries

Batteries contain pollutants. It is illegal to dispose of them with the household rubbish.

- Dispose of batteries in an environmentally responsible manner. Take discharged batteries to a qualified specialist workshop or to a collection point for used batteries.

Requirements:

- You need a CR 2032 lithium cell battery (3 V).

Mercedes-Benz recommends that you have the battery replaced at a qualified specialist workshop.

- Remove the emergency key (→ page 172).

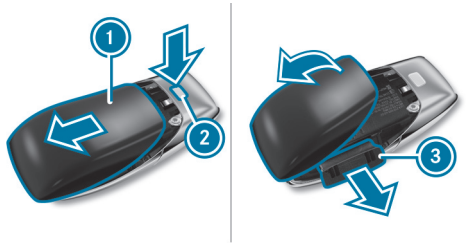

- Press the release knob (2) down fully and slide the cover (1) in the direction of the arrow.
- Fold out the cover (1) in the direction of the arrow and remove.
- Remove the battery compartment (3) and take out the discharged battery.
- Insert the new battery into the battery compartment (3). Observe the positive terminal marking in the battery compartment and on the battery.
- Push in the battery compartment (3).
- Re-attach the cover (1) and push in until it engages.

Troubleshooting problems with the key

YOU CAN NO LONGER LOCK OR UNLOCK THE VEHICLE

POSSIBLE CAUSES:

- The key battery is at low capacity or is flat.

► Check the battery via the indicator lamp (⟶ page 170).

► Replace the key battery as necessary (⟶ page 173).

► Use the replacement key.

► Use the emergency key to lock or unlock (⟶ page 178).

► Have the key checked at a qualified specialist workshop.

THERE IS INTERFERENCE FROM A POWERFUL RADIO SIGNAL SOURCE.

POSSIBLE CAUSES IF THE FUNCTION OF THE KEY IS IMPAIRED:

- high-voltage power lines
- mobile phones
- electronic devices (notebooks, tablets)
- shielding due to metallic objects or induction loops for electrical gate systems or automatic barriers

► Ensure that there is sufficient distance between the key and the potential source of interference.

YOU HAVE LOST A KEY

► Have the key deactivated at a qualified specialist workshop.

► If necessary, have the mechanical lock replaced as well.

Doors

Notes on the additional door lock

The additional door lock is only available for vehicles in the United Kingdom.

WARNING
Risk of injury to persons inside the vehicle when the additional door lock is activated

If the additional door lock is activated, the doors can no longer be opened from the inside.

- Never leave persons, in particular children, unattended in the vehicle.
- If there are persons in the vehicle, do not activate the additional door lock.

THE ADDITIONAL DOOR LOCK IS AUTOMATICALLY ACTIVATED IN THE FOLLOWING SITUATIONS:

- The vehicle is locked using the key.
- The vehicle is locked using KEYLESS-GO.

If the additional door lock is activated, the doors cannot be opened from the inside.

After locking, you can use the horn to issue a signal.

THE ADDITIONAL DOOR LOCK IS NOT ACTIVATED IN THE FOLLOWING CASES:

- The interior protection was deactivated before the vehicle was locked (⟶ page 201).
- The vehicle was locked via Mercedes-Benz Connect (⟶ page 563).

Unlocking/opening the doors from the inside

- **United Kingdom only:** observe the notes on the additional door lock (⟶ page 175).

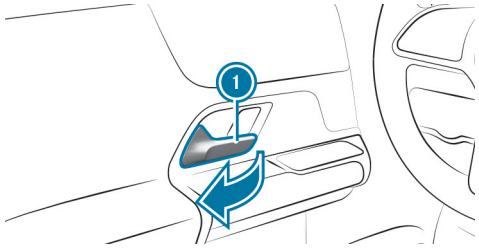

- Pull the door 1 handle.

Centrally locking and unlocking the vehicle from the inside

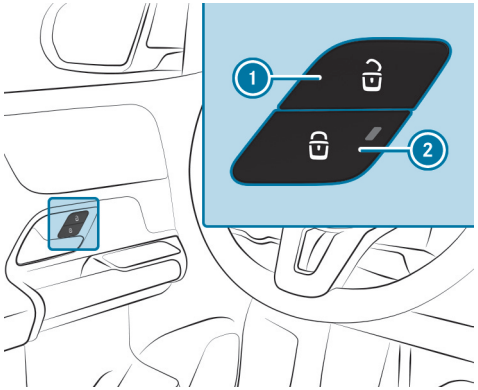

► **To unlock:** press the button (1).

► **To lock:** press the button (2).

The red indicator lamp on the button (2) lights up when the vehicle is locked.

The socket flap is also locked and unlocked. The socket flap can be opened even if a key is detected in the vehicle.

THE VEHICLE IS NOT UNLOCKED WHEN THE BUTTON (1) IS PRESSED:

- If you have locked the vehicle using the key
- If you have locked the vehicle using KEYLESS-GO

Locking/unlocking the vehicle with KEYLESS-GO

Requirements

- The key is outside the vehicle.
- The distance between the key and the vehicle does not exceed 1 m.
- The driver's door and the door on which the door handle is used are closed.

NOTE

Vehicle damage due to unintentional opening of the tailgate

- when using an automatic car wash
- when using a high pressure cleaner

► Deactivate the function of the key in these situations.

or

► Make sure that the key is at a minimum distance of 3 m away from the vehicle.

OBSERVE THE NOTES:

- on washing the vehicle in a car wash (⟶ page 32)
- on using a high pressure cleaner (⟶ page 614)

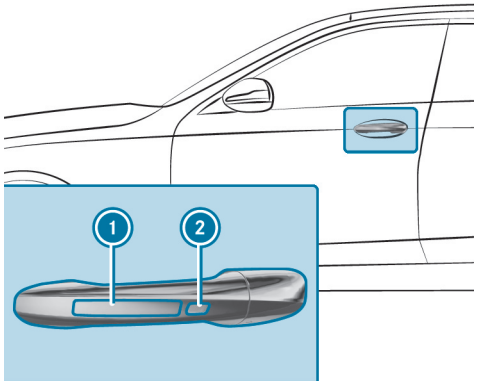

- **To unlock the vehicle:** touch the inner surface of the door handle.
- **To lock the vehicle:** touch sensor surface 1 or 2.
- **Convenience closing:** touch recessed sensor surface 2 until the closing process has been completed.

ⓘ Further information on convenience closing (⟶ page 189).

If you open the tailgate from outside, it is automatically unlocked.

Troubleshooting problems with KEYLESS-GO

YOU CAN NO LONGER LOCK OR UNLOCK THE VEHICLE USING KEYLESS-GO.

POSSIBLE CAUSES:

- The function of the key has been deactivated.
- The key battery is at low capacity or is flat.

- Activate the function of the key (⟶ page 66).
- Check the battery via the indicator lamp (⟶ page 170).
- Replace the key battery as necessary (⟶ page 173).
- Use the replacement key.
- Use the emergency key to lock or unlock (⟶ page 178).
- Have the vehicle and key checked at a qualified specialist workshop.

THERE IS INTERFERENCE FROM A POWERFUL RADIO SIGNAL SOURCE.

POSSIBLE CAUSES IF THE FUNCTION OF KEYLESS-GO IS IMPAIRED:

- high-voltage power lines
- mobile phones
- electronic devices (notebooks, tablets)
- shielding due to metallic objects or induction loops for electrical gate systems or automatic barriers

- Ensure that there is sufficient distance between the key and the potential source of interference.

Activating/deactivating the automatic locking feature

The vehicle is locked automatically when the vehicle is switched on and the wheels are turning faster than walking pace.

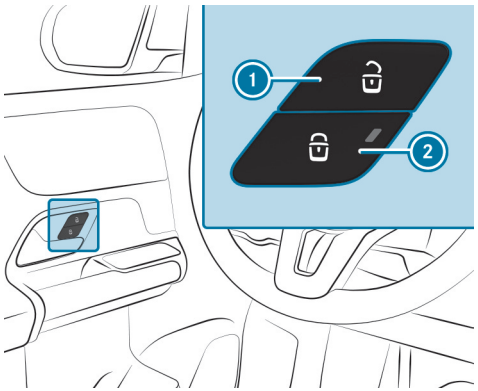

- **To activate:** press and hold the button (2) for approximately five seconds until an acoustic signal sounds.
- **To deactivate:** press and hold the button (1) for approximately five seconds until an acoustic signal sounds.

The red indicator lamp on the button (2) lights up when the vehicle is locked.

IN THE FOLLOWING SITUATIONS, THERE IS A DANGER OF BEING LOCKED OUT WHEN THE FUNCTION IS ACTIVATED:

- while the vehicle is being tow started or pushed
- if the vehicle is being tested on a roller dynamometer

Activating/deactivating automatic locking in the MBUX multimedia system

Multimedia system:

Settings >> Vehicle >> Open/close

The vehicle is locked automatically when the vehicle is switched on and the wheels are turning faster than walking pace.

- Activate or deactivate Automatic locking.

IN THE FOLLOWING SITUATIONS, THERE IS A DANGER OF BEING LOCKED OUT WHEN THE FUNCTION IS ACTIVATED:

- The vehicle is being towed or pushed.
- If the vehicle is being tested on a roller dynamometer.

Locking/unlocking the vehicle with the emergency key

LOCKING/UNLOCKING THE DRIVER'S DOOR WITH THE EMERGENCY KEY

If you wish to lock the vehicle entirely using the emergency key, first press the button for locking from the inside while the driver's door is open. Then proceed to lock the driver's door using the emergency key.

If you unlock and open the driver's door with the emergency key, this triggers the Anti-Theft Alarm system.

If you unlock the driver's door with the emergency key, the tailgate will not be unlocked.

Information on starting the vehicle in emergency operation mode (⟶ page 293).

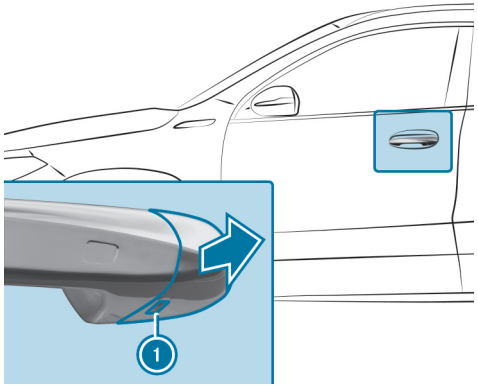

- Remove the emergency key (⟶ page 172).
- Insert the emergency key as far as it will go into the opening (1) on the cover cap.
- Pull out the door handle slightly and hold it in position.
- Pull the cover cap on the emergency key as straight as possible away from the vehicle until it releases.
- Release the door handle.

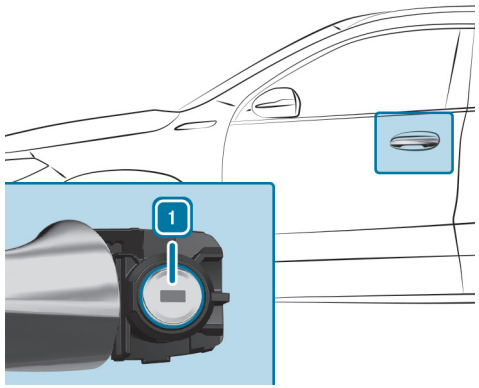

- **To unlock:** turn the emergency key anti-clockwise to position [1].
- **To lock:** turn the emergency key clockwise to position [1].
- Carefully press the cover cap onto the lock cylinder until it engages and is seated firmly.

LOCKING THE FRONT PASSENGER DOOR AND REAR DOORS

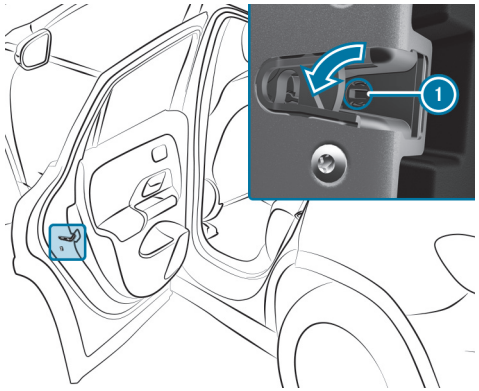

- Insert a suitable object, e.g. the emergency key, into the opening (1) on the door lock.

- **To lock the left-hand side of the vehicle:** turn the emergency key anti-clockwise as far as it will go.
- **To lock the right-hand side of the vehicle:** turn the emergency key clockwise as far as it will go.

If the locked door is then closed, it can no longer be opened from the outside.

Load compartment

Opening the tailgate

NOTE
Damage to the tailgate caused by obstacles above the vehicle

The tailgate swings rearwards and upwards when it is opened.

- Make sure that there is sufficient space behind and above the tailgate.

- If the tailgate is unlocked, press the top of the Mercedes star located on the tailgate.
- **Vehicles with HANDS-FREE ACCESS:** make a kicking movement with your foot below the bumper (⟶ page 184).

VEHICLES WITH AN EASY-PACK TAILGATE

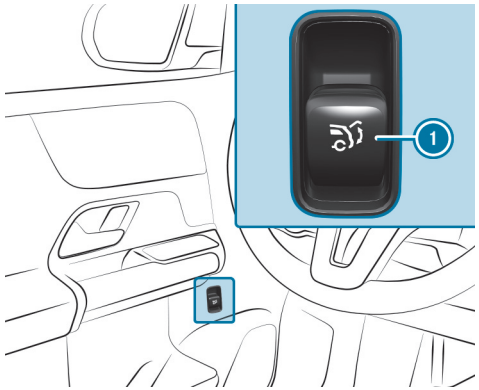

- Pull remote operating switch (1) until the tailgate opens.

or

- Press and hold the button on the key.
- If the tailgate is unlocked, press the top of the Mercedes star.

- If the tailgate has stopped in an intermediate position, pull it upwards. Release it as soon as it begins to open.

If an obstacle obstructs the tailgate during the automatic opening process, blockage detection will stop the tailgate. The automatic blockage detection function is only an aid. It is not a substitute for you having to pay attention.

Closing the tailgate

WARNING
Risk of injury from unsecured items in the vehicle

If objects, luggage or loads are not secured or not secured sufficiently, they could slip, tip over or be thrown around and thereby hit vehicle occupants.

There is a risk of injury, particularly in the event of sudden braking or a sudden change in direction.

- ► Always stow objects in such a way that they cannot be thrown around.
- ► Before the journey, secure objects, luggage or loads against slipping or tipping over.

Observe the notes on loading the vehicle.
Notes on closing the tailgate: your vehicle is equipped with automatic key recognition.

NOTE THAT THE TAILGATE WILL NOT BE LOCKED IN THE FOLLOWING SITUATION:

- You have locked the vehicle and closed the tailgate while a key belonging to the vehicle is inside the vehicle and is detected.

  and
- A second key belonging to the vehicle is not detected outside the vehicle.

Automatic key recognition is only an aid and is not a substitute for your attentiveness.

- ► Before locking, ensure that at least one key belonging to the vehicle is outside the vehicle.
- ► **To close the tailgate:** pull the tailgate downwards with the handle and let it drop into the lock.

VEHICLES WITH AN EASY-PACK TAILGATE

WARNING
Risk of becoming trapped during automatic closing of the tailgate

Body parts may become trapped. There may be people in the closing area.

- ► Make sure that nobody is in the vicinity of the closing area.

USE ONE OF THE FOLLOWING OPTIONS TO STOP THE CLOSING PROCESS:

- Press the button on the key.
- Press or pull the remote operating switch on the driver's door.
- Press the closing or locking button on the tailgate.
- Press the top of the Mercedes star on the tailgate.

Vehicles with HANDS-FREE ACCESS: it is also possible to stop the closing process by making a kicking movement below the rear bumper.

- ► **To close the tailgate:** pull the tailgate downwards slightly. Release it as soon as it begins to close.

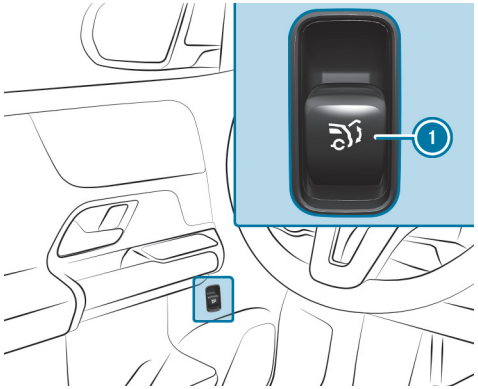

- Switch on the power supply or the vehicle.
- Push remote operating switch (1) until the tailgate is fully closed.

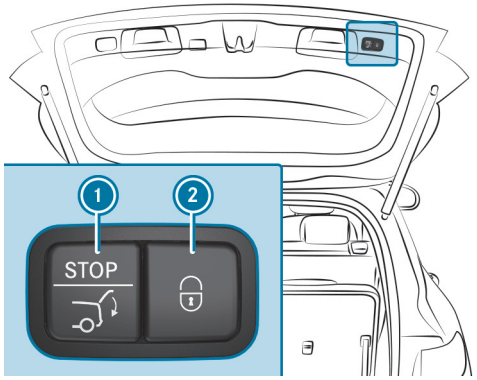

- Press closing button (1) on the tailgate.

VEHICLES WITH KEYLESS-GO

- Press locking button (2) on the tailgate.

  If a key is detected outside the vehicle, the tailgate will close and the vehicle will be locked.

- Press and hold the button on the key. The key must be in the vicinity of the vehicle.

VEHICLES WITH HANDS-FREE ACCESS

- Make a kicking movement with your foot below the bumper (→ page 184).

AUTOMATIC REVERSING FUNCTION FOR THE TAILGATE

The tailgate is equipped with automatic blockage detection with a reversing function. If an obstacle obstructs the tailgate during the automatic closing process, it will automatically open again slightly. Automatic blockage detection with the reversing function is only an aid and is not a substitute for your attentiveness.

- During the closing process, ensure that no body parts remain within the closing area.

WARNING
Risk of becoming trapped despite reversing function

THE REVERSING FUNCTION WILL NOT REACT:

- to soft, light and thin objects, e.g. fingers
- towards the end of the closing procedure

In these situations in particular, the reversing function cannot prevent someone being trapped.

► Ensure that no body parts are in the closing area.

IF SOMEONE IS TRAPPED, EITHER:

- Press the button on the key.
- Press or pull the remote operating switch on the driver's door.
- Press the closing or locking button on the tailgate.
- Press the top of the Mercedes star on the tailgate.

HANDS-FREE ACCESS function

HANDS-FREE ACCESS allows you to open and close the tailgate, or even stop the opening and closing process at any point, by performing a kicking motion under the bumper. The transmission must be in position P for this function.

THE KICKING MOTION TRIGGERS THE OPENING OR CLOSING PROCESS ALTERNATELY.

- If you stop the tailgate opening process with a kicking motion, the tailgate is closed with the next kicking motion
- If you stop the tailgate closing process with a kicking motion, the tailgate is opened with the next kicking motion

IN THE FOLLOWING CASES, THE TAILGATE CAN ONLY BE CLOSED WITH HANDS-FREE ACCESS:

- If the vehicle is switched on and the key's unlocking function is set to unlock the driver's door only when unlocking the vehicle (→ page 171).
- If the vehicle has been centrally locked from the inside (→ page 176).

Observe the notes when opening (→ page 181) and closing (→ page 182) the tailgate.

Two warning tones sound when the tailgate is opening or closing.

NOTE
Vehicle damage due to unintentional opening of the tailgate

- when using an automatic car wash
- when using a high pressure cleaner

► Deactivate the function of the key in these situations.

or

► Make sure that the key is at a minimum distance of 3 m away from the vehicle.

Ensure that you are standing firmly on the ground when performing the kicking motion. You could otherwise lose your balance, e.g. on ice.

OBSERVE THE FOLLOWING NOTES:

- The key is behind the vehicle.
  If the key is not recognised:
  - Take the key in your hand.
    or
  - Ensure that the function of the key is activated (⟶ page 66).
- Stand at least 30 cm away from the vehicle when performing the kicking motion.
- Do not come into contact with the bumper when performing the kicking motion.
- Do not carry out the kicking motion too slowly.
- The kicking motion must be towards the vehicle and back again.
- **Vehicles with trailer hitch:** Perform the kicking motion to the left or to the right of the ball head.

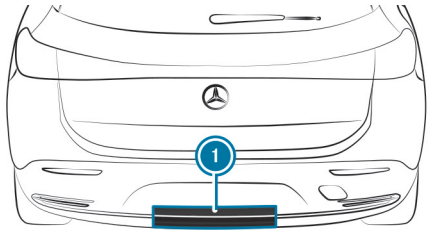

1 Detection range of the sensors

If several consecutive kicking motions are not successful, wait ten seconds.

SYSTEM LIMITS

THE SYSTEM MAY BE IMPAIRED OR INOPERATIVE IN THE FOLLOWING CASES:

- The sensors are dirty, e.g. due to road salt or snow.
- The kicking motion is performed with a prosthetic leg.

THE TAILGATE CAN OPEN OR CLOSE UNINTENTIONALLY IN THE FOLLOWING SITUATIONS:

- A person's arms or legs are moving within the sensor detection range, e.g. when polishing the vehicle or picking up objects.
- Objects are moved or placed behind the vehicle, e.g. a charging cable or luggage.
- Tension belts, tarps or other covers are pulled over the bumper.
- A protective mat with a length reaching over the loading sill down into the detection range of the sensors is used.
- The protective mat is not secured correctly.
- **Vehicles with trailer hitch:** work is being carried out on the trailer hitch, trailers or rear bicycle racks.

Deactivate the function of the key (⟶ page 66) or do not carry the key about your person in such situations.

You can watch an animation on this topic via the following link:

Limiting the opening angle of the tailgate

ACTIVATING THE OPENING ANGLE LIMITER

You can limit the opening angle of the tailgate in the top half of its opening range up to a point shortly before the end position.

► Stop the opening procedure of the tailgate at the desired position.

- Press and hold the closing button on the tailgate until you hear a short tone.
  The opening angle limiter will be activated. The tailgate will then stop in the stored position when opened.

FULLY OPENING THE TAILGATE AFTER IT HAS STOPPED AUTOMATICALLY

- Press the top of the Mercedes star on the tailgate again.

or

- Open the tailgate manually.

DEACTIVATING THE OPENING ANGLE LIMITER

- Press and hold the closing button on the tailgate until two short tones sound.

Unlocking the tailgate with the emergency key

Requirements

- The rear seat backrest has been folded forward.
- The load compartment cover has been removed.

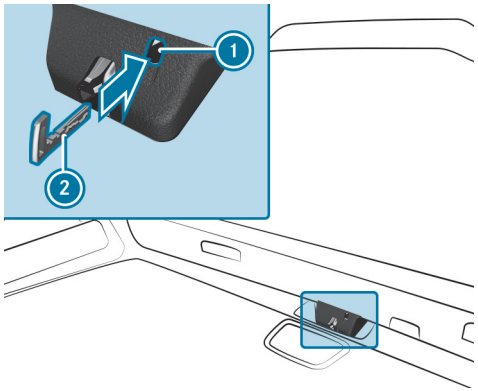

- Remove the emergency key (→ page 172).
- Insert emergency key (2) into opening (1) in the trim and push it in.
  The tailgate will be unlocked.

Side windows

Opens and closes the side windows

WARNING
Risk of becoming trapped when opening a side window

When you open a side window, parts of the body could be drawn in or become trapped between the side window and window frame.

- When opening, make sure that nobody is touching the side window.
- If someone is trapped, release the button immediately or pull it in order to close the side window again.

WARNING
Risk of becoming trapped when closing a side window

When closing a side window, body parts could be trapped in the closing area in the process.

- When closing, make sure that no body parts are in the closing area.
- If someone is trapped, release the button immediately or press the button in order to reopen the side window.

WARNING
Risk of becoming trapped when children operate the side window

Children could become trapped if they operate the side windows, particularly when unattended.

- Activate the child safety lock for the side windows in the rear passenger compartment.
- When exiting the vehicle, always lock the vehicle and take the key with you.
- Never leave children unattended in the vehicle.

Requirements:

- The power supply or the vehicle has been switched on.

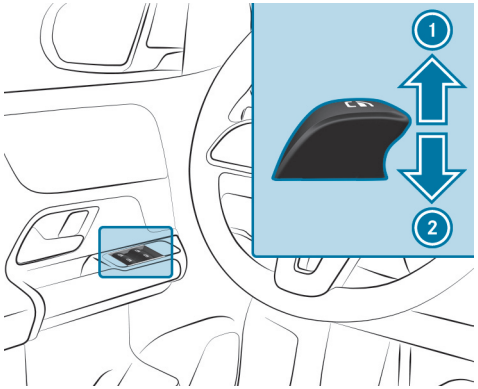

1 Closing
2 Opening

The buttons on the driver's door take precedence.

- **To start automatic operation:** press the button beyond the point of resistance or pull and release it.
- **To interrupt automatic operation:** press or pull the button again.

You can continue to operate the side windows with the vehicle switched off.

This function will be available for around four minutes or until a front door is opened.

AUTOMATIC REVERSING FUNCTION OF THE SIDE WINDOWS
If an obstacle impedes a side window during the closing process, the side window will open again automatically. The automatic reversing function serves solely as an aid and is not a substitute for your attentiveness.

- During the closing process, ensure that no body parts remain within the closing area.

WARNING
Risk of becoming trapped despite there being reversing protection on the side window

THE REVERSING FUNCTION DOES NOT REACT:

- to soft, light and thin objects, e.g. fingers.
- during resetting.

The reversing function cannot prevent someone from becoming trapped in these situations.

- During the closing process, make sure that no body parts are in the closing area.
- If someone becomes trapped, press the button to open the side window again.

Automatic function of the side windows

IN THE FOLLOWING CASES, THE SIDE WINDOWS WILL BE CLOSED AUTOMATICALLY WHEN THE VEHICLE IS SWITCHED OFF:

- if it starts to rain
  Rain will be detected by a rain sensor on the windscreen.
- in extreme temperatures
- after a certain time (depending on the on-board electrical system voltage)
- if there is a malfunction in the power supply

The side windows will be closed as far as the ventilation position.

Vehicles with a panorama sliding sunroof: the side windows will be closed completely if the sliding sunroof is open.

If the side windows are obstructed during automatic closing, the side window concerned will open again slightly. After another automatic closing process, the automatic function may be deactivated. The automatic function will be active again the next time the vehicle is started.

Convenience opening (ventilating the vehicle before starting a journey)

WARNING
Risk of entrapment when opening a side window

When opening a side window, parts of the body could be drawn in or become trapped between the side window and window frame.

- ► When opening, make sure that nobody is touching the side window.
- ► Release the button immediately if somebody becomes trapped.

Requirements:

- The key is in immediate proximity to the vehicle.

► Press and hold the button on the key.

THE FOLLOWING FUNCTIONS ARE PERFORMED:

- The vehicle is unlocked.
- The side windows open.
- The panoramic sliding sunroof opens.
- The driver's seat ventilation is switched on.

ⓘ If the roller sunblind of the panoramic sliding sunroof is closed, the roller sunblind is opened first.

► **Interrupt convenience opening:** Release the button.

► **Continue convenience opening:** Press and hold the button again.

Convenience closing (closing the vehicle from outside)

WARNING
Risk of entrapment due to not paying attention during convenience closing

When the convenience closing feature is operating, parts of the body could become trapped in the closing area of the side window and the sliding sunroof.

- ► When the convenience closing feature is operating, monitor the entire closing process and make sure that no body parts are in the closing area.

Requirements:

- The key is in immediate proximity to the vehicle.

- Press and hold the button on the key.

  THE FOLLOWING FUNCTIONS ARE PERFORMED:

  - The vehicle is locked.
  - The side windows are closed.
  - The panoramic sliding sunroof is closed.

- **To interrupt convenience closing:** release the button.
- **To continue convenience closing:** press and hold the button again.

Convenience closing also functions with KEYLESS-GO (→ page 176).

Resolving problems with the side windows

WARNING
Risk of becoming trapped or fatally injured if reversing protection is not activated

If you close a side window again immediately after it has been blocked, the side window will close with increased or maximum force. The reversing function is then not active and body parts may become trapped.

- Make sure that no parts of the body are in the closing area.
- To stop the closing process, release the button or press the button again to reopen the side window.

A SIDE WINDOW CANNOT BE CLOSED AND YOU CANNOT SEE THE CAUSE.

- Check to see whether any objects are in the window guide.
- Adjust the side windows.

Adjusting the side windows

If a side window is obstructed during closing and reopens again immediately:

- Immediately after this, pull and hold the corresponding button again until the side window has closed and hold the button for at least one more second (re-adjustment).

  The side window will be closed without the automatic reversing function.

If the side window is obstructed again and reopens again immediately:

- Immediately after this, pull and hold the corresponding button again until the side window has closed and hold the button for at least one more second (follow-up adjustment).

  The side window will be closed without the automatic reversing function.
- If a side window is obstructed again during closing and reopens again slightly, consult a qualified specialist workshop.

THE SIDE WINDOWS CANNOT BE OPENED OR CLOSED USING THE CONVENIENCE OPENING FEATURE.

POSSIBLE CAUSES:

- The key is not in the immediate vicinity of the vehicle.
- The key battery is at low capacity or is flat.

- Check the battery using the indicator lamp (→ page 170).

- Replace the key battery, if necessary (⟶ page 173).

Sliding sunroof

Opening and closing the sliding sunroof

ⓘ The term "sliding sunroof" also refers to the panoramic sliding sunroof.

⚠ **WARNING**
Risk of becoming trapped when the sliding sunroof is being opened and closed

Body parts may become trapped in the range of movement.

- ► During opening and closing, make sure that no body parts are in the range of movement.
- ► Release the button immediately if somebody becomes trapped.

or

- ► Briefly press the button in any direction during automatic operation.

  The opening or closing process will be stopped.

⚠ **WARNING**
Risk of children becoming trapped if they operate the sliding sunroof

Children could become trapped if they operate the sliding sunroof, particularly when unattended.

- ► Never leave children unattended in the vehicle.
- ► When leaving the vehicle, always lock the vehicle and take the key with you.

WARNING
Risk of becoming trapped when the roller sunblind is being opened and closed

Body parts may become trapped between the roller sunblind and frame or sliding roof.

- ► When opening or closing, make sure that no body parts are in the roller sunblind's range of movement.
- ► Release the button immediately if somebody becomes trapped.

or

- ► Briefly press the button in any direction during automatic operation.

  The opening or closing process will be stopped.

NOTE
Malfunction due to snow and ice

Snow and ice may cause the sliding sunroof to malfunction.

- ► Open the sliding sunroof only if it is free of snow and ice.

NOTE
Damage caused by moisture ingress

- ► Do not open the sliding sunroof if it has just rained.
- ► Do not open the sliding sunroof immediately after washing the vehicle in a car wash.

NOTE
Damage caused by protruding objects

Objects that protrude from the sliding sunroof may damage the seals.

- ► Do not allow anything to protrude from the sliding sunroof.

NOTE
Damage to the panorama sliding sunroof due to non-approved roof luggage racks

The panorama sliding sunroof may be damaged by the roof luggage rack if you attempt to open it when using a roof luggage rack not tested and approved for Mercedes-Benz.

- ► When a roof luggage rack is fitted, open the panorama sliding sunroof only if this has been tested and approved for Mercedes-Benz.

The panorama sliding sunroof may be raised to allow ventilation of the vehicle interior.

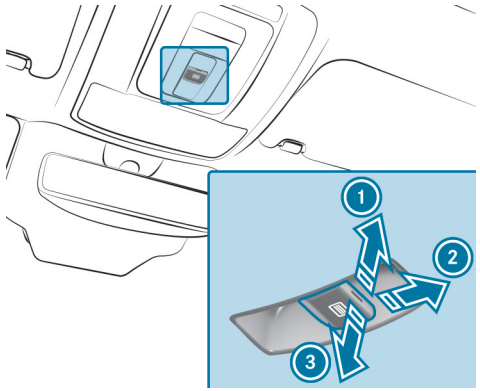

1 To raise
2 To open
3 To close/lower

Use the button to operate the panorama sliding sunroof and the roller sunblind.

The panoramic sliding sunroof can be operated only when the roller sunblind is open.

- Check whether the sliding sunroof can be raised or opened when a roof luggage rack is fitted.
- **To start automatic operation:** press the button beyond the point of resistance or pull and release it.
- **To interrupt automatic operation:** briefly press the button in any direction.

  The opening/closing process is stopped.

AUTOMATIC REVERSING FUNCTION OF THE SLIDING SUNROOF

If an obstacle obstructs the sliding sunroof during the closing process, the sliding sunroof will open again automatically. The automatic reversing function serves solely as an aid and is not a substitute for your attentiveness.

- Keep the opening area and the guide rails free of debris (e.g. ice, snow or leaves).
- When closing the sliding sunroof, ensure that no body parts or objects are within the closing area.

WARNING
Risk of becoming trapped despite the reversing function being active

IN PARTICULAR, THE REVERSING FUNCTION DOES NOT REACT:

- to soft, light and thin objects, e.g. fingers.
- towards the end of the closing procedure.
- during resetting.

- During the closing process, make sure that no body parts are in the closing area.
- Release the button immediately if somebody becomes trapped.

or

- Briefly press the button in any direction during automatic operation.

  The closing process will be stopped.

AUTOMATIC REVERSING FUNCTION OF THE ROLLER SUNBLIND

If an obstacle obstructs the roller sunblind during the closing process, the roller sunblind will open again automatically. The automatic reversing function serves solely as an aid and is not a substitute for your attentiveness.

- Keep the opening area and the guide rails free of debris (e.g. ice, snow or leaves).
- When closing the roller sunblind, ensure that no body parts or objects are within the range of movement.

WARNING
Risk of becoming trapped despite reversing function

In particular, the reversing function does not react to soft, light and thin objects, e.g. fingers.

- When closing the roller sunblind, make sure that no body parts are in the range of movement.
- Release the button immediately if somebody becomes trapped.

or

- Briefly press the button in any direction during the automatic closing process.

  The closing process will be stopped.

Automatic functions of the sliding sunroof

The term "sliding sunroof" also refers to the panorama sliding sunroof.

THE SLIDING SUNROOF WILL BE CLOSED AUTOMATICALLY WHEN THE VEHICLE HAS BEEN SWITCHED OFF IN THE FOLLOWING SITUATIONS:

- if it starts to rain

  Rain will be detected by a rain sensor on the windscreen.
- in extreme temperatures
- after a certain time (depending on the on-board electrical system voltage)
- if there is a malfunction in the power supply

The sliding sunroof will rise at the rear in order to continue ventilating the vehicle interior.

If the sliding sunroof is obstructed during an automatic closing procedure, it will be opened again slightly. The automatic function for the sliding sunroof and the side windows will then be deactivated.

RAIN CLOSING FUNCTION WHEN DRIVING
Vehicles with a panorama sliding sunroof: if it starts to rain, the raised sliding sunroof will automatically be lowered while the vehicle is in motion.

AUTOMATIC LOWERING FUNCTION
Vehicles with a panorama sliding sunroof: if the sliding sunroof is raised at the rear, it will automatically be lowered slightly at higher speeds. At low speeds, it will be raised again automatically.

WARNING
Risk of becoming trapped by automatic lowering of the sliding sunroof

At higher speeds, the raised sliding sunroof will automatically be lowered slightly at the rear.

- Make sure that nobody reaches into the sliding sunroof's range of movement while the vehicle is in motion.
- If somebody becomes trapped, briefly push the sliding sunroof button forwards or backwards.

By pushing or pulling the button, you can interrupt the automatic functions "Rain closing function when driving" and "Automatic lowering".

Rectifying problems with the sliding sunroof

WARNING
Risk of becoming trapped or fatal injuries when the sliding sunroof is closed again

If the sliding sunroof is closed again immediately after it has been blocked or reset, it will close with increased force.

- Make sure that no parts of the body are in the closing area.
- Release the button immediately if somebody becomes trapped.

or

- Briefly press the button in any direction during the automatic closing process.
  The closing process will be stopped.

THE SLIDING SUNROOF CANNOT BE CLOSED AND YOU CANNOT SEE THE CAUSE.

The term "sliding sunroof" also refers to the panorama sliding sunroof.

If the sliding sunroof is obstructed during closing and reopens again slightly:

- Immediately after automatic reversing, pull and hold the button down again to the point of resistance until the sliding sunroof is closed.
  The sliding sunroof will be closed with increased force.

If the sliding sunroof is obstructed again and opens again slightly:

- Repeat the previous step.
  The sliding sunroof will be closed again with increased force.

Vehicles with a panorama sliding sunroof: the sliding sunroof or the roller sunblind is not operating smoothly.

- Reset the sliding sunroof and the roller sunblind.

Resetting the sliding sunroof and the roller sunblind

- Pull and hold the button little by little until the sliding sunroof is fully closed.
- Pull and hold the button little by little until the roller sunblind is fully closed.
- Use automatic operation to fully open and then close the sliding sunroof.

Anti-theft protection

Function of the immobiliser

The immobiliser prevents your vehicle from being started without the correct key.

The immobiliser is automatically activated when the vehicle is switched off, and deactivated when the vehicle is switched on.

ATA (Anti-Theft Alarm system)

FUNCTION OF THE ATA SYSTEM

IF THE ATA SYSTEM IS PRIMED, A VISUAL AND AUDIBLE ALARM IS ISSUED IN THE FOLLOWING SITUATIONS:

- when a door is opened
- when the tailgate is opened
- when the bonnet is opened
- when the interior protection is triggered (⟶ page 200)
- when the tow-away protection is triggered (⟶ page 199)

THE ATA SYSTEM IS PRIMED AUTOMATICALLY AFTER APPROXIMATELY TEN SECONDS IN THE FOLLOWING SITUATIONS:

- After locking the vehicle with the key
- After locking the vehicle using KEYLESS-GO

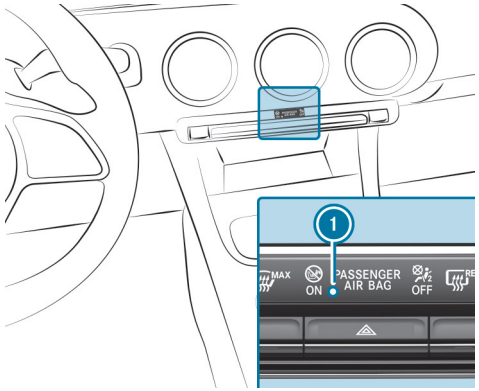

The indicator lamp (1) flashes when the ATA system is primed.

THE ATA SYSTEM IS DEACTIVATED AUTOMATICALLY IN THE FOLLOWING SITUATIONS:

- After unlocking the vehicle with the key
- After unlocking the vehicle using KEYLESS-GO
- After pressing the Start/Stop button with the key in the storage compartment (⟶ page 293)

DEACTIVATING THE ATA

► Press the , , or button on the key.

or

► Press the start/stop button with the key in the stowage compartment (⟶ page 293)

DEACTIVATING THE ALARM USING KEYLESS-GO

- Grasp the outside door handle with the key outside the vehicle.

Emergency Key Deactivation

REQUIREMENTS:

- Your smartphone and your vehicle have an active data connection.
- The vehicle battery is sufficiently charged.
- **To deactivate all keys:** there is no other key in the vehicle.
- There are no persons or animals in the vehicle.
- The vehicle is parked in a safe place.

ⓘ Only use the Emergency Key Deactivation function in an emergency.

ⓘ If you deactivate all keys, they can only be reactivated within 30 days. After 30 days or if the battery state of charge is low, the vehicle must be unlocked and opened using the emergency key.

Where is the vehicle key? Misplaced, lost or stolen?

Emergency Key Deactivation provides you with the option to deactivate specific keys or all vehicle keys in the event of loss or theft, and to reactivate them when the keys have been found again.

Here's how it works:

- Open ☰ in the Mercedes-Benz App and select the vehicle.
  The My garage menu appears.
- Select Service management.
- Activate Emergency Key Deactivation.

DEACTIVATE SPECIFIC KEYS OR ALL KEYS

- Select 🚗 in the Mercedes-Benz App.
- Select Emergency Key Deactivation.
- Deactivate specific keys or Deactivate all keys.
- Select Confirm.
- Enter the four-digit PIN and select Send.
  The request will be sent. If deactivation is successful, you will receive a message that a specific key or all keys have been deactivated.

ACTIVATE ALL KEYS

- Select Emergency Key Deactivation.
- Select Activate all keys.
- Enter the four-digit PIN and select Send.
  The request will be sent. If activation is successful, you will receive a message that all keys have been activated.

Function of tow-away protection

A visual and audible alarm is triggered if an alteration to your vehicle's angle of inclination is detected while tow-away protection is primed.

TOW-AWAY PROTECTION IS AUTOMATICALLY PRIMED AFTER ABOUT 60 SECONDS:

- After locking the vehicle with the key

- After locking the vehicle using KEYLESS-GO

TOW-AWAY PROTECTION IS ONLY PRIMED WHEN THE FOLLOWING COMPONENTS ARE CLOSED:

- Doors
- Tailgate

TOW-AWAY PROTECTION IS AUTOMATICALLY DEACTIVATED:

- After pressing the button or on the key
- After pressing the Start/Stop button with the key in the storage compartment (⟶ page 293)
- After unlocking the vehicle using KEYLESS-GO
- When using HANDS-FREE ACCESS

Information on collision detection for a parked vehicle (⟶ page 346).

Priming/deactivating tow-away protection

Multimedia system:

Settings Vehicle Open/close Vehicle protection

▶ Activate or deactivate Tow-away protection.

TOW-AWAY PROTECTION IS PRIMED AGAIN IN THE FOLLOWING CASES:

- The vehicle is unlocked again.
- A door is opened.
- The vehicle is locked again.

Function of interior protection

When interior protection is primed, a visual and audible alarm is triggered if movement is detected in the vehicle interior.

INTERIOR PROTECTION IS PRIMED AUTOMATICALLY AFTER APPROXIMATELY TEN SECONDS:

- after locking the vehicle with the key
- after locking the vehicle using KEYLESS-GO

INTERIOR PROTECTION IS ONLY PRIMED WHEN THE FOLLOWING COMPONENTS ARE CLOSED:

- Doors
- Tailgate

INTERIOR PROTECTION IS AUTOMATICALLY DEACTIVATED:

- after pressing the or button on the key
- after pressing the start/stop button with the key in the stowage compartment (⟶ page 293)
- after unlocking the vehicle using KEYLESS-GO
- when using HANDS-FREE ACCESS

THE FOLLOWING SITUATIONS CAN LEAD TO A FALSE ALARM:

- when there are moving objects suchas mascots in the vehicle interior
- if a side window is open
- if the panoramic sunroof is open

Priming/deactivating interior protection

Multimedia system:

Settings » Vehicle » Open/close » Vehicle protection

▶ Activate or deactivate Interior protection.

INTERIOR PROTECTION IS PRIMED AGAIN IN THE FOLLOWING CASES:

- The vehicle is unlocked again.
- A door is opened.
- The vehicle is locked again.

Back to Contents

Seats and stowing

This interactive PDF works like a website – tap or click a button to jump straight to where you want to go. You can return here at any time via the navigation bar at the top left.

Notes on correct positioning of the driver's seat
Notes on the height limit on the third row of seats
Notes on grab handles
Seats
Steering wheel
Easy entry and exit feature
Memory function
Stowage areas
Cup holders
Ashtray and cigarette lighter
Sockets
Charging a mobile phone wirelessly
Fitting/removing the floor mats

Notes on correct positioning of the driver's seat

WARNING
Risk of accident due to adjusting the vehicle settings while the vehicle is in motion

YOU COULD LOSE CONTROL OF THE VEHICLE IN THE FOLLOWING SITUATIONS IN PARTICULAR:

- if you adjust the driver's seat, the head restraint, the steering wheel or the mirror while the vehicle is in motion
- if you fasten your seat belt while the vehicle is in motion

► Before starting the vehicle: in particular, adjust the driver's seat, head restraint, steering wheel and mirror, and fasten your seat belt.

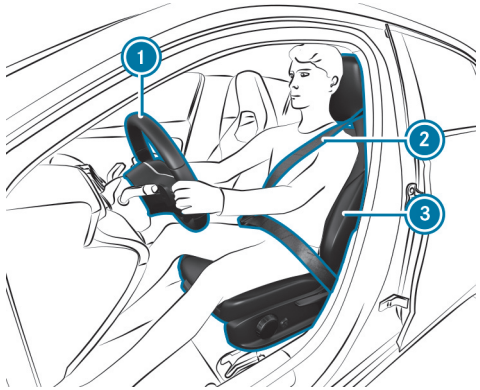

ENSURE THE FOLLOWING WHEN ADJUSTING THE STEERING WHEEL (1), SEAT BELT (2) AND DRIVER'S SEAT (3):

- You are sitting as far away as possible from the driver's airbag, taking the following points into consideration:
- You are sitting in an upright position
- Your thighs are supported slightly by the seat cushion.
- Your legs are not fully extended and you can actuate all pedals with ease
- The back of your head is supported at eye level by the centre of the head restraint
- You can hold the steering wheel with your arms slightly bent
- You can move your legs freely
- You can easily see all notifications on the driver display.
- You have a good overview of the traffic conditions
- Observe the notes on correct fastening of the seat belt (⟶ page 120).

Notes on the height limit on the third row of seats



WARNING
Risk of injury if height limit on the third row is not observed

If a person exceeds the permissible body size for the seats in the third row of seats, he or she may be injured through contact with the roof or parts of the vehicle interior.

For that reason, a person of the relevant height must not use the seats on the third row.

► Use a suitable vehicle seat.

The seats on the third row are approved only for people up to 1.65 m in height. Observe the information regarding height on the information label.

Notes on grab handles

WARNING
Risk of injury due to excessive load on the grab handles

If you apply your full body weight to the grab handle or pull it abruptly, the grab handle may be damaged or come loose from its anchorage. This may result in injuries.

- Use the grab handles only to stabilise the seating position or to assist in getting in and out of the seat.

Seats

Adjusting the front seat mechanically (without Seat Comfort Package)

WARNING
Risk of becoming trapped if the seats are adjusted by children

Children could become trapped if they adjust the seats, particularly when unattended.

- When leaving the vehicle, always take the key with you and lock the vehicle.
- Never leave children unattended in the vehicle.

This also applies to the Digital Vehicle Key.

WARNING
Risk of becoming trapped if the seats are adjusted

When adjusting a seat, you may trap yourself or a vehicle occupant, e.g. on the seat guide rail.

- Make sure that no part of the body is within the seat's range of motion when adjusting a seat.

Observe the safety notes on "Airbags" and "Children in the vehicle".

WARNING
Risk of accident due to the driver's seat not being engaged

The driver's seat may move unexpectedly while driving.

This could cause you to lose control of the vehicle.

- Always make sure that the driver's seat is engaged before starting the vehicle.

WARNING
Risk of accident due to adjusting the vehicle settings while the vehicle is in motion

YOU COULD LOSE CONTROL OF THE VEHICLE IN THE FOLLOWING SITUATIONS IN PARTICULAR:

- if you adjust the driver's seat, the head restraint, the steering wheel or the mirror while the vehicle is in motion
- if you fasten your seat belt while the vehicle is in motion

- Before starting the vehicle: in particular, adjust the driver's seat, head restraint, steering wheel and mirror, and fasten your seat belt.

WARNING
Risk of becoming trapped if the seat height is adjusted carelessly

If you adjust the seat height carelessly, you or other vehicle occupants could be trapped and thereby injured.

Children in particular could accidentally press the electrical seat adjustment buttons and become trapped.

- While moving the seats, make sure that hands or other body parts do not get under the lever assembly of the seat adjustment system.

WARNING
Risk of injury due to head restraints not being fitted or being adjusted incorrectly

If head restraints have not been installed or have not been adjusted correctly, there is an increased risk of injury in the head and neck area, e.g. in the event of an accident or when braking.

- Always drive with the head restraints fitted.
- Before driving off, make sure for every vehicle occupant that the centre of the head restraint supports the back of the head at about eye level.

Do not interchange the head restraints of the front and rear seats. Otherwise, you will not be able to adjust the height and angle of the head restraints correctly.

Adjust the head restraint fore-and-aft position so that it is as close as possible to the back of your head.

WARNING
Risk of injury or death due to incorrect seat position

The seat belt will not offer the intended level of protection if you have not moved the seat backrest to an almost vertical position.

In particular, you may slip under the seatbelt and injure yourself.

- Adjust the seat properly before beginning your journey.
- Always ensure that the seat backrest is in an almost vertical position and that the shoulder section of your seat belt is routed across the centre of your shoulder.

WARNING
Risk of injury due to excessive load on the grab handles

If you apply your full body weight to the grab handle or pull it abruptly, the grab handle may be damaged or come loose from its anchorage. This may result in injuries.

- Use the grab handles only to stabilise the seating position or to assist in getting in and out of the seat.

WARNING
Risk of potentially fatal injuries due to objects trapped under the front passenger seat

Objects trapped under the front passenger seat may interfere with the function of the automatic front passenger airbag shutoff or damage the system.

- Do not stow any objects under the front passenger seat.
- When the front passenger seat is occupied, ensure that no objects have become trapped beneath the front passenger seat.

ADJUSTS THE SEAT FORE-AND-AFT POSITION

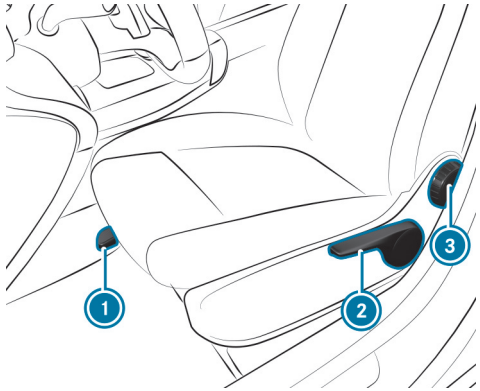

- Lift lever (1) and slide the seat into the desired position.
- Ensure that the seat is properly secured in position.

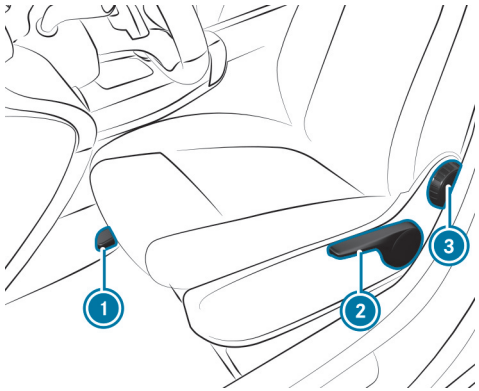

- **To adjust the seat height:** push or pull lever (2) until the desired position has been reached.
- **To adjust the seat backrest inclination:** turn handwheel (3) forwards and backwards until the desired position has been reached.

Adjusting the front seat mechanically (with Seat Comfort Package)

WARNING
Risk of becoming trapped if the seats are adjusted by children

Children could become trapped if they adjust the seats, particularly when unattended.

- When leaving the vehicle, always take the key with you and lock the vehicle.
- Never leave children unattended in the vehicle.

This also applies to the Digital Vehicle Key.

WARNING
Risk of becoming trapped if the seats are adjusted

When adjusting a seat, you may trap yourself or a vehicle occupant, e.g. on the seat guide rail.

► Make sure that no part of the body is within the seat's range of motion when adjusting a seat.

Observe the safety notes on "Airbags" and "Children in the vehicle".

WARNING
Risk of accident due to the driver's seat not being engaged

The driver's seat may move unexpectedly while driving.

This could cause you to lose control of the vehicle.

► Always make sure that the driver's seat is engaged before starting the vehicle.

WARNING
Risk of accident due to adjusting the vehicle settings while the vehicle is in motion

YOU COULD LOSE CONTROL OF THE VEHICLE IN THE FOLLOWING SITUATIONS IN PARTICULAR:

- if you adjust the driver's seat, the head restraint, the steering wheel or the mirror while the vehicle is in motion
- if you fasten your seat belt while the vehicle is in motion

► Before starting the vehicle: in particular, adjust the driver's seat, head restraint, steering wheel and mirror, and fasten your seat belt.

WARNING
Risk of becoming trapped if the seat height is adjusted carelessly

If you adjust the seat height carelessly, you or other vehicle occupants could be trapped and thereby injured.

Children in particular could accidentally press the electrical seat adjustment buttons and become trapped.

► While moving the seats, make sure that hands or other body parts do not get under the lever assembly of the seat adjustment system.

WARNING
Risk of injury due to head restraints not being fitted or being adjusted incorrectly

If head restraints have not been installed or have not been adjusted correctly, there is an increased risk of injury in the head and neck area, e.g. in the event of an accident or when braking.

- Always drive with the head restraints fitted.
- Before driving off, make sure for every vehicle occupant that the centre of the head restraint supports the back of the head at about eye level.

Do not interchange the head restraints of the front and rear seats. Otherwise, you will not be able to adjust the height and angle of the head restraints correctly.

Adjust the head restraint fore-and-aft position so that it is as close as possible to the back of your head.

WARNING
Risk of injury or death due to incorrect seat position

The seat belt will not offer the intended level of protection if you have not moved the seat backrest to an almost vertical position.

In particular, you may slip under the seatbelt and injure yourself.

- Adjust the seat properly before beginning your journey.
- Always ensure that the seat backrest is in an almost vertical position and that the shoulder section of your seat belt is routed across the centre of your shoulder.

WARNING
Risk of injury due to excessive load on the grab handles

If you apply your full body weight to the grab handle or pull it abruptly, the grab handle may be damaged or come loose from its anchorage. This may result in injuries.

- Use the grab handles only to stabilise the seating position or to assist in getting in and out of the seat.

WARNING
Risk of potentially fatal injuries due to objects trapped under the front passenger seat

Objects trapped under the front passenger seat may interfere with the function of the automatic front passenger airbag shutoff or damage the system.

- Do not stow any objects under the front passenger seat.
- When the front passenger seat is occupied, ensure that no objects have become trapped beneath the front passenger seat.

ADJUSTS THE SEAT FORE-AND-AFT POSITION

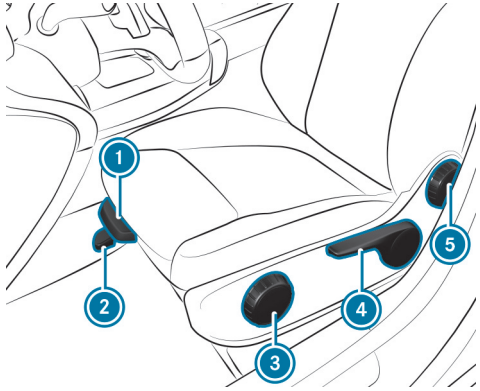

- Lift lever (2) and slide the seat into the desired position.
- Ensure that the seat is properly secured in position.

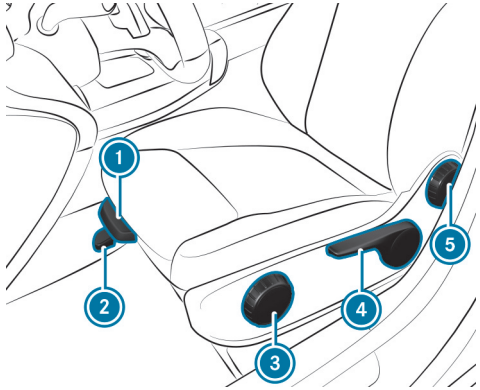

- **To adjust the seat cushion length (driver's seat only):** lift lever (1) and slide the front section of the seat cushion forwards or backwards.
- **To adjust the seat cushion inclination:** turn handwheel (3) forwards and backwards until the desired position has been reached.
- **To adjust the seat height:** push or pull lever (4) until the desired position has been reached.
- **To adjust the seat backrest inclination:** turn handwheel (5) forwards and backwards until the desired position has been reached.

Adjusting the front seat electrically

WARNING
Risk of becoming trapped if the seats are adjusted by children

Children could become trapped if they adjust the seats, particularly when unattended.

- When leaving the vehicle, always take the key with you and lock the vehicle.
- Never leave children unattended in the vehicle.

You can adjust the seats when the vehicle is switched off.

WARNING
Risk of becoming trapped if the seats are adjusted

When adjusting a seat, you may trap yourself or a vehicle occupant, e.g. on the seat guide rail.

- Make sure that no part of the body is within the seat's range of motion when adjusting a seat.

Observe the safety notes on "Airbags" and "Children in the vehicle".

WARNING
Risk of becoming trapped if the seat height is adjusted carelessly

If you adjust the seat height carelessly, you or other vehicle occupants could be trapped and thereby injured.

Children in particular could accidentally press the electrical seat adjustment buttons and become trapped.

- While moving the seats, make sure that hands or other body parts do not get under the lever assembly of the seat adjustment system.

WARNING
Risk of injury due to head restraints not being fitted or being adjusted incorrectly

If head restraints have not been installed or have not been adjusted correctly, there is an increased risk of injury in the head and neck area, e.g. in the event of an accident or when braking.

- Always drive with the head restraints fitted.
- Before driving off, make sure for every vehicle occupant that the centre of the head restraint supports the back of the head at about eye level.

Do not interchange the head restraints of the front and rear seats. Otherwise, you will not be able to adjust the height and angle of the head restraints correctly.

Adjust the head restraint fore-and-aft position so that it is as close as possible to the back of your head.

WARNING
Risk of injury or death due to incorrect seat position

The seat belt will not offer the intended level of protection if you have not moved the seat backrest to an almost vertical position.

In particular, you may slip under the seatbelt and injure yourself.

- Adjust the seat properly before beginning your journey.
- Always ensure that the seat backrest is in an almost vertical position and that the shoulder section of your seat belt is routed across the centre of your shoulder.

WARNING
Risk of injury due to excessive load on the grab handles

If you apply your full body weight to the grab handle or pull it abruptly, the grab handle may be damaged or come loose from its anchorage. This may result in injuries.

- Use the grab handles only to stabilise the seating position or to assist in getting in and out of the seat.

WARNING
Risk of potentially fatal injuries due to objects trapped under the front passenger seat

Objects trapped under the front passenger seat may interfere with the function of the automatic front passenger airbag shutoff or damage the system.

- Do not stow any objects under the front passenger seat.
- When the front passenger seat is occupied, ensure that no objects have become trapped beneath the front passenger seat.

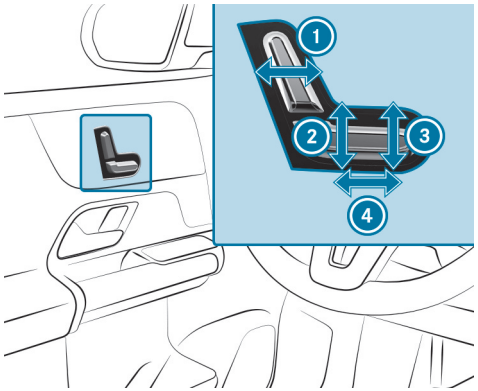

1. Seat backrest inclination
2. Seat height
3. Seat cushion inclination
4. Seat fore-and-aft position

- Save the settings with the memory function (⟶ page 230).

Adjusting the 4-way lumbar support

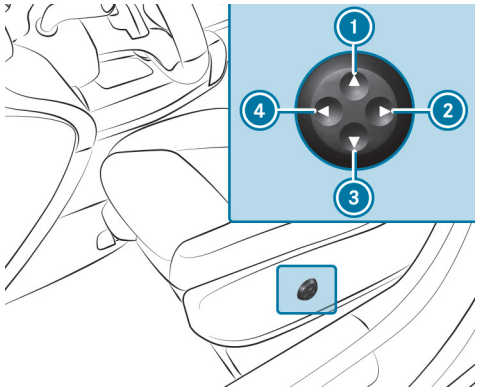

1. Higher
2. Softer
3. Lower
4. Firmer

- Use buttons 1 to 4 to adjust the contour of the backrest.

Adjusting rear seats manually

WARNING
Risk of becoming trapped when adjusting the seats

When you adjust a seat, you may trap yourself or a vehicle occupant.

- When adjusting a seat, make sure that no one has any body parts in the sweep of the seat.

WARNING
Risk of accident and injury if the seat and seat backrest are not engaged

The seat and seat backrest can fold forwards.

THERE IS A RISK OF THE FOLLOWING, IN PARTICULAR:

- The vehicle occupant may be pressed against the seat belt. The seat belt cannot provide the intended protection and could cause additional injury to the vehicle occupant.
- A child restraint system is no longer properly supported or correctly positioned and can no longer perform its function as intended.
- The seat backrest will not be able to restrain objects or goods in the load compartment.

ALWAYS ENSURE THAT THE SEAT AND SEAT BACKREST ARE ENGAGED, IN PARTICULAR:

- Before persons travel in the vehicle while sitting on a seat with the easy entry and exit feature
- After the seat has been adjusted
- After the easy entry and exit feature has been used
- After the load compartment enlargement has been folded forwards

WARNING
Risk of injury from adjusting the rear seats while driving

You or other vehicle occupants could be trapped and thereby injured.

Adjust the rear seats before starting the drive system.

WARNING
Risk of injury due to excessive load on the grab handles

If you apply your full body weight to the grab handle or pull it abruptly, the grab handle may be damaged or come loose from its anchorage. This may result in injuries.

► Use the grab handles only to stabilise the seating position or to assist in getting in and out of the seat.

NOTE
Damage caused by objects in the footwell or behind the rear seats.

The rear seats and/or objects may be damaged during adjustment in the longitudinal direction.

► Stow the objects in a suitable place.

This function is available only for vehicles with a movable rear bench seat.

The components of the rear bench seat can be moved. You can move the right-hand and left-hand parts together with the centre part independently of each other. This allows you to make the footwell larger in either the second or third row of seats.



- ► Lift release handle (1) and slide the corresponding part of the bench seat into the desired position.
- ► Let go of release handle (1).
- ► Make sure that the seat is engaged.

Adjusting the rear seat backrests manually

WARNING
Risk of becoming trapped when adjusting the seats

When you adjust a seat, you may trap yourself or a vehicle occupant.

- ► When adjusting a seat, make sure that no one has any body parts in the sweep of the seat.

WARNING
Risk of accident and injury if the seat and seat backrest are not engaged

The seat and seat backrest can fold forwards.

THERE IS A RISK OF THE FOLLOWING, IN PARTICULAR:

- The vehicle occupant may be pressed against the seat belt. The seat belt cannot provide the intended protection and could cause additional injury to the vehicle occupant.
- A child restraint system is no longer properly supported or correctly positioned and can no longer perform its function as intended.
- The seat backrest will not be able to restrain objects or goods in the load compartment.

ALWAYS ENSURE THAT THE SEAT AND SEAT BACKREST ARE ENGAGED, IN PARTICULAR:

- Before persons travel in the vehicle while sitting on a seat with the easy entry and exit feature
- After the seat has been adjusted
- After the easy entry and exit feature has been used
- After the load compartment enlargement has been folded forwards

Always ensure that all vehicle occupants have their seat belts fastened correctly and are sitting properly. Particular attention must be paid to children.

If the rear seat backrest is not engaged and locked in place, the red lock verification indicator will be visible.

WARNING
Risk of injury due to seat backrests folded forwards

If the seat backrest of the rear seat is folded forwards, persons in the third row of seats may hit parts of the seat mechanism, especially in the event of an accident, braking manoeuvre or abrupt change of direction.

- ► If there is a person in the third row of seats, the rear seat in front of them must be folded back to the driving position before the journey begins.
- ► Persons in the third row of seats should not rest their legs on a seat backrest that has been folded forwards.

You can fold the backrests of the second row of seats forwards to get in or out.

WARNING
Risk of becoming trapped if the seat is not engaged

The seat does not engage when folded forwards. The seat can fold backwards unexpectedly, e.g. when accelerating, braking or in the event of an abrupt change of direction or an accident.

People in the seat's sweep can become trapped.

- ► If a seat is folded forwards, always fold it back before driving off.
- ► Make sure that the seat is engaged.

WARNING
Risk of injury due to excessive load on the grab handles

If you apply your full body weight to the grab handle or pull it abruptly, the grab handle may be damaged or come loose from its anchorage. This may result in injuries.

- ► Use the grab handles only to stabilise the seating position or to assist in getting in and out of the seat.

Requirements:

- The area into which the seat is folded is clear.

ADJUSTING THE SEAT BACKREST

YOU CAN FOLD THE SEAT BACKRESTS ON THE SECOND ROW OF SEATS FORWARDS FOR THE FOLLOWING SITUATIONS:

- For easier access to the luggage compartment
- Vehicles with a third row of seats: for getting in or out

You can set the seat backrest to different angles.

If you no longer require the seat backrest to be folded down for loading or for getting in and out, fold it back into place.

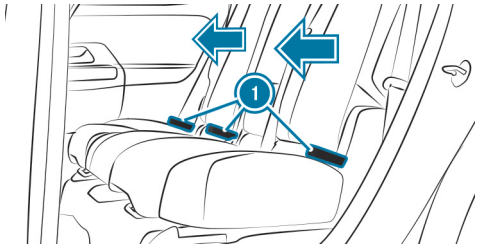

- Hold the seat backrest in place with your hand or back.
- Gently pull one of release loops (1) and fold the seat backrest forwards or backwards.
- Ensure that the seat backrest is engaged.

FOLDING THE SEAT BACKREST FORWARDS TO ENTER THE VEHICLE (VEHICLES WITH A THIRD ROW OF SEATS)

WARNING
Risk of injury when folding the seat backrest on the second row of seats forwards

If the handle for the seat backrest on the second row of seats is pulled from the third row of seats, the seat backrest on the second row of seats will fold forwards and will not engage. People in the sweep of this seat backrest can become trapped.

- When getting out of the third row of seats, do not hold the seat backrest on the second row of seats.

Vehicles with EASY-ENTRY function: If a seat on the second row of seats is located in the EASY-ENTRY area, this will be shown on the driver's display.

- If necessary, fold the seats on the third row into position (⟶ page 241).



- Pull handle (1).
  The seat backrest will fold forwards.

NOTE
Damage to the seat backrest handle caused by pulling

The handle can be damaged if it is used to pull the seat forwards.

- Move the seat forwards by the seat backrest.

- Move the seat forwards by the seat backrest. Hold the seat firmly in place while doing so.

FOLDING THE SEAT BACKREST BACK TO THE UPRIGHT POSITION (VEHICLES WITH THIRD ROW OF SEATS)

- Swivel seat backrest back until it engages.
  The seat backrest will remain in the cargo position.
- Slide the seat backwards.
  The seat will stop in the front position.

- ► Move the seat into the desired position (⟶ page 213).
- ► If necessary, fold in the seats on the third row (⟶ page 240).

ⓘ To increase the size of the luggage compartment, you can move the seat backrests into the luggage compartment floor position (⟶ page 41).

Head restraints

ADJUSTING THE FRONT SEAT HEAD RESTRAINTS MANUALLY

⚠ **WARNING**
Risk of accident due to adjusting the vehicle settings while the vehicle is in motion

YOU COULD LOSE CONTROL OF THE VEHICLE IN THE FOLLOWING SITUATIONS IN PARTICULAR:

- if you adjust the driver's seat, the head restraint, the steering wheel or the mirror while the vehicle is in motion
- if you fasten your seat belt while the vehicle is in motion

► Before starting the vehicle: in particular, adjust the driver's seat, head restraint, steering wheel and mirror, and fasten your seat belt.

⚠ **WARNING**
Risk of injury due to head restraints not being fitted or being adjusted incorrectly

If head restraints have not been installed or have not been adjusted correctly, there is an increased risk of injury in the head and neck area, e.g. in the event of an accident or when braking.

► Always drive with the head restraints fitted.

► Before driving off, make sure for every vehicle occupant that the centre of the head restraint supports the back of the head at about eye level.

Do not interchange the head restraints of the front and rear seats. Otherwise, you will not be able to adjust the height and angle of the head restraints correctly.

Adjust the head restraint fore-and-aft position so that it is as close as possible to the back of your head.

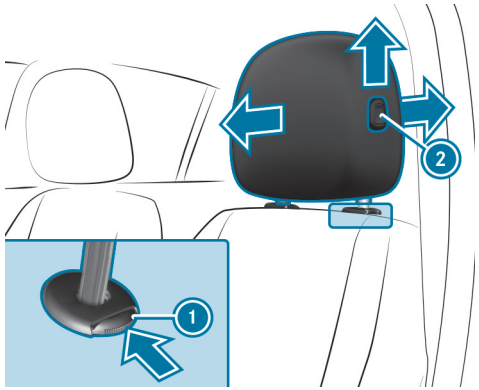

► **To raise:** pull the head restraint up.

- **To lower:** press release knob (1) in the direction of the arrow and push the head restraint down.
- **To move the driver's head restraint forwards:** press release knob (2) and pull the head restraint forwards.
- **To move the driver's head restraint backwards:** press release knob (2) and push the head restraint backwards.

ADJUSTING THE HEAD RESTRAINTS OF THE REAR SEATS MANUALLY

WARNING
Risk of injury due to head restraints not being fitted or being adjusted incorrectly

If head restraints have not been installed or have not been adjusted correctly, there is an increased risk of injury in the head and neck area, e.g. in the event of an accident or when braking.

- Always drive with the head restraints fitted.
- Before driving off, make sure for every vehicle occupant that the centre of the head restraint supports the back of the head at about eye level.

Do not interchange the head restraints of the front and rear seats. Otherwise, you will not be able to adjust the height and angle of the head restraints correctly. Adjust the head restraint fore-and-aft position so that it is as close as possible to the back of your head.

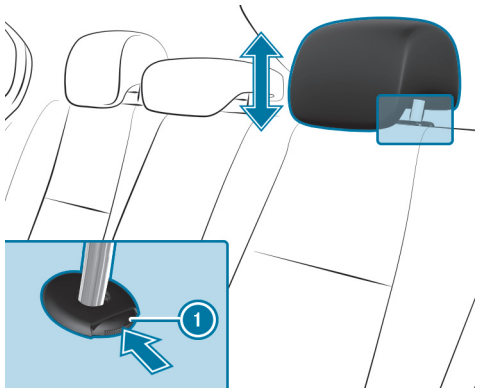

- **To raise:** pull the head restraint up.
- **To lower:** press release button (1) and push the head restraint down.
- **If the centre seat on the second row of seats is not occupied:** press the head restraint down all the way.

VEHICLES WITH A THIRD ROW OF SEATS

The head restraints on the third row of seats have a usage- position and a non-usage position. The usage position is the extended, top position in which the head restraint engages; the non-usage position is the bottom, retracted position of the head restraint. If the seats on the third row of seats are being used, the head restraint must be in the top, engaged usage position.

When choosing a seat, bear in mind the limited space available. With the seat in the correct, upright position, your head should not touch the roof lining.

- **If the third row of seats is occupied:** move the head restraints to the very top and have them engage there.
- **If the third row of seats is not occupied:** move the head restraints to the very bottom.

FITTING/REMOVING THE REAR SEAT HEAD RESTRAINTS

WARNING
Risk of injury due to head restraints not being fitted or being adjusted incorrectly

If head restraints have not been installed or have not been adjusted correctly, there is an increased risk of injury in the head and neck area, e.g. in the event of an accident or when braking.

- Always drive with the head restraints fitted.
- Before driving off, make sure for every vehicle occupant that the centre of the head restraint supports the back of the head at about eye level.

Do not interchange the head restraints of the front and rear seats. Otherwise, you will not be able to adjust the height and angle of the head restraints correctly.

Adjust the head restraint longitudinal position so that it is as close as possible to the back of your head.

REMOVAL

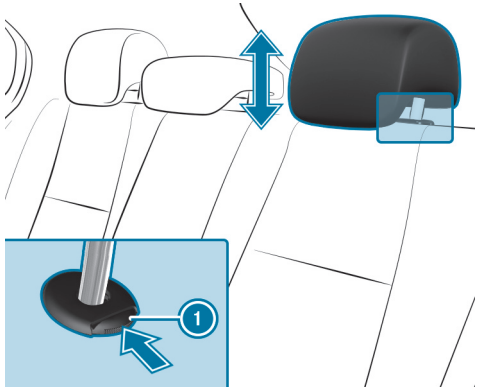

- Release the rear seat backrest and fold it forwards slightly (⟶ page 41).
- Pull the head restraint upwards as far as it will go.
- Push the release knob (1) in the direction indicated by the arrow and pull out the head restraint.

FITTING

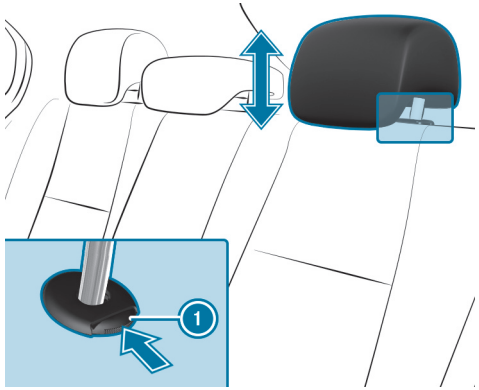

- Insert the head restraint so that the notches on the bar are on the left when viewed in the direction of travel.
- Push the head restraint down until it engages.
- Fold the rear seat backrest back until it engages.

Setting automatic seat adjustment

WARNING
Risk of becoming trapped during adjustment of the driver's seat after calling up a driver profile

Selecting a user profile may trigger an adjustment of the driver's seat to the position saved under the user profile. You or other vehicle occupants could be injured in the process.

- Make sure that when the position of driver's seat is being adjusted using the multimedia system, no people or body parts are in the seat's range of movement.

If there is a risk of someone becoming trapped, immediately stop the adjustment process by:

- a) Tapping the warning message on the central display.

or

- b) Pressing a position button of the memory function or a seat adjustment switch in the driver's door.

  The adjustment process is stopped.

Multimedia system:

Comfort » Seat » Position seat automatically

MANUALLY ADJUSTING DRIVER'S SEAT AND STEERING WHEEL POSITION TO BODY SIZE

The vehicle will calculate suitable driver's seat and steering wheel positions on the basis of the driver's body size and set them directly.

- **To set the unit of measurement:** select cm or ft/in.
- Set the size using the scale.
- Select Start positioning.

  The driver's seat and steering wheel positions will be adjusted to the body size that has been set.

You can also configure these settings via the Mercedes-Benz user account for your user profile. By synchronising the profiles in the vehicle and the Mercedes-Benz connect profiles, you can adopt these settings for your vehicle.
Further information about synchronising user profiles (→ page 467).

If the driver's seat and steering wheel positions calculated by the vehicle are not practical or comfortable, they can be manually adapted at any time via the control buttons.
The outside mirrors are not set via this function. Instead, they have to be set manually via the operating switches.

Resetting the seat adjustments

Multimedia system:

Comfort Seat

- Select Reset.
- Select for the desired seat.

  The settings for the selected seat will be reset.

Switching the seat heating on/off

WARNING
Risk of burns due to repeatedly switching on the seat heating

Repeatedly switching on the seat heating can cause the seat cushion and seat backrest padding to become very hot.

In particular, the health of persons with limited temperature sensitivity or a limited ability to react to high temperatures may be affected or they may even suffer burn-like injuries.

- Do not repeatedly switch on the seat heating.

To protect against overheating, the seat heating may be temporarily deactivated after it has been switched on repeatedly.

NOTE
Damage to the seats caused by objects or documents when the seat heater is switched on

When the seat heater is switched on, overheating may occur due to objects or documents placed on the seats e.g. seat cushions or child seats. This could cause damage to the seat surface.

- Make sure that no objects or documents are on the seats when the seat heater is switched on.

Requirements

- The power supply is switched on.

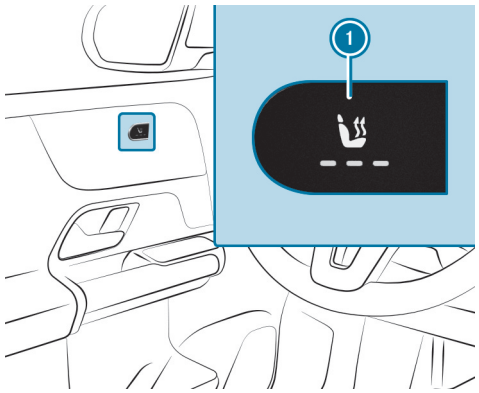

- Press button 1 repeatedly until the desired heating level is set.

  Depending on the heating level, up to three indicator lamps will light up. If all indicator lamps are off, the seat heating is switched off.

The seat heating will automatically switch down from the three heating levels after around 8, 10 and 20 minutes. For optimum seating comfort, the seat heating can remain switched on at reduced power after 20 minutes.

ⓘ The seat heating will be deactivated when the vehicle is in **ECO+** (⟶ page 280) climate mode and when you are using the range maximisation function (⟶ page 301).

ⓘ When the outside temperature is low, the seat heating may switch on automatically to one of the three heating levels depending on the vehicle interior temperature and remain switched on for an extended time. This will be indicated by the respective indicator lamps. You can change the heating level manually at any time by pressing button (1), which will override the automatic seat heating function.

Switching the seat ventilation on/off

Requirements

- The power supply is switched on.

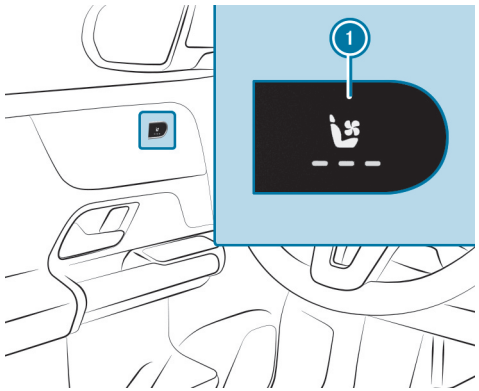

► Press button (1) repeatedly until the desired blower setting has been reached.

Depending on the blower setting, up to three indicator lamps will light up. If all indicator lamps are off, the seat ventilation is switched off.

Steering wheel

Adjusting the steering wheel manually

WARNING
Risk of accident due to adjusting the vehicle settings while the vehicle is in motion

YOU COULD LOSE CONTROL OF THE VEHICLE IN THE FOLLOWING SITUATIONS IN PARTICULAR:

- if you adjust the driver's seat, the head restraint, the steering wheel or the mirror while the vehicle is in motion
- if you fasten your seat belt while the vehicle is in motion

► Before starting the vehicle: in particular, adjust the driver's seat, head restraint, steering wheel and mirror, and fasten your seat belt.

WARNING
Risk of entrapment for children when adjusting the steering wheel

Children could injure themselves if they adjust the steering wheel.

► Never leave children unattended in the vehicle.

► When leaving the vehicle, always take the key with you and lock the vehicle.

UNLOCKING

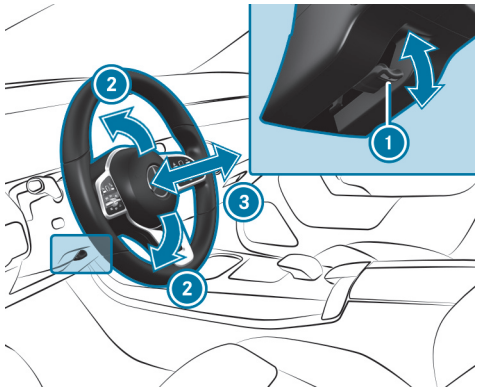

► Fold release lever (1) down as far as it will go.

► Adjust height (2) and distance (3) to the steering wheel.

LOCKING

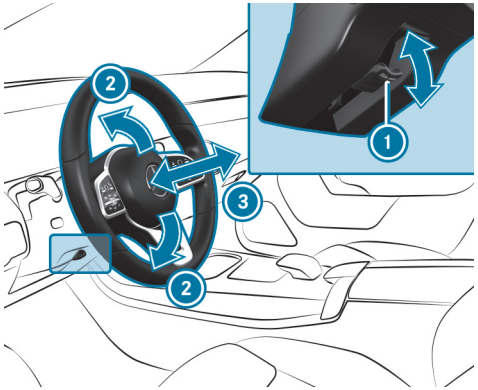

- Fold release lever (1) up as far as it will go.
- Check and make sure that the steering column is locked by moving the steering wheel.

Switching the steering wheel heater on/off

Depending on the vehicle version, the steering wheel heater can be switched on/off via a switch on the steering wheel.

Requirements:

- The vehicle is switched on.

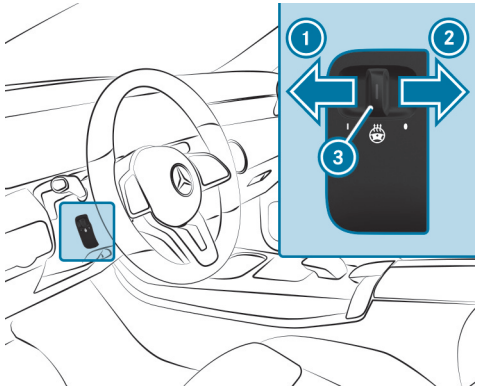

- **To switch on:** push the switch to position (1).
  If the indicator lamp (3) lights up, the steering wheel heater is switched on.
- **To switch off:** push the switch to position (2).

When you switch the vehicle off, the steering wheel heater will switch off.

Decoupling the steering wheel heater from the seat heating

Requirements:

- The power supply or the vehicle has been switched on.
- The steering wheel heater and the seat heating are linked.

Multimedia system:

Comfort >> Seat >> Heating settings

The function is active by default and the steering wheel heater will automatically be activated and deactivated when the seat heating is switched on and off.

- Tap on Switch on steering wheel heater.

  The steering wheel heater will be decoupled from the seat heating.

The steering wheel heater can also be deactivated via the MBUX voice assistant.

Easy entry and exit feature

Using the easy entry and exit feature

WARNING
Risk of accident when pulling away during the adjustment process of the easy entry and exit feature

You could lose control of the vehicle.

- ► Always wait until the adjustment process is complete before driving off.

WARNING
Risk of becoming trapped during adjustment of the easy entry and exit feature

You and other vehicle occupants could become trapped.

- ► Ensure that no-one has any body parts in the range of movement of the seat.

If there is a risk of becoming trapped by the driver's seat:

- ► Press the seat adjustment switch.
  The adjustment process will be stopped.

You can stop the adjustment process by pressing one of the memory function position switches.

WARNING
Risk of becoming trapped if children activate the easy entry and exit feature

Children could become trapped if they activate the easy entry and exit feature, particularly when unattended.

- ► Never leave children unattended in the vehicle.
- ► When leaving the vehicle, always take the key with you and lock the vehicle.

WHEN THE EASY ENTRY AND EXIT FEATURE IS ACTIVE, THE DRIVER'S SEAT WILL MOVE INTO AN IDEAL POSITION FOR GETTING IN OR OUT OF THE VEHICLE AND THE SEAT BACKREST WILL BE MOVED TO A MORE UPRIGHT POSITION IF:

- you switch off the vehicle when the driver's door is open.
- you open the driver's door when the vehicle is switched off.

The driver's seat will only move forwards or backwards if it is not already in the ideal position for getting in or out of the vehicle.

The seat backrest will then move forwards only if it is not already at the front of the backrest adjustment range.

driver's seat and steering wheel to move into the correct position automatically (⟶ page 465).

THE DRIVER'S SEAT WILL MOVE BACK TO THE LAST DRIVE POSITION IF:

- you switch the vehicle on when the driver's door is closed.
- you close the driver's door when the vehicle is switched on.

THE LAST DRIVE POSITION WILL BE SAVED WHEN:

- you switch off the vehicle.
- you call up the seat settings via the memory function.
- you save the seat settings via the memory function.

Setting the easy entry and exit feature

Requirements:

- The automatic seat adjustment has been activated (⟶ page 221).
- The power supply or the vehicle has been switched on.

Multimedia system:

Settings » Vehicle » Comfort » Easy entry and exit feature

SETTING THE EASY ENTRY AND EXIT FEATURE

► Select Steering wheel and seat, Steering wheel only or Off.

ⓘ If you are using a custom user profile, this information will be used for the easy entry and exit feature. This will cause the

Memory function

Memory function

WARNING
Risk of an accident if the memory function is used while driving

If you use the memory function on the driver's side while driving, you could lose control of the vehicle as a result of the adjustments being made.

- Only use the memory function on the driver's side when the vehicle is stationary.

WARNING
Risk of entrapment when adjusting the seat with the memory function

When the memory function adjusts the seat, you and other vehicle occupants – particularly children – could become trapped.

- During the adjustment process of the memory function, make sure that no one has any body parts in the sweep of the seat.
- If someone becomes trapped, press a preset position button or seat adjustment switch immediately.

WARNING
Danger of entrapment when memory function is activated by children

When children activate the memory function, they can get trapped, especially if they are unsupervised.

- Never leave children unattended in the vehicle.
- When leaving the vehicle, always take the key with you and lock the vehicle.

You can use the memory function when the vehicle is switched off.
Seat adjustments for up to three people can be stored and called up using the memory function.

YOU CAN SAVE SETTINGS FOR THE FOLLOWING SYSTEMS:

- Seat
- Seat contour
- Outside mirrors

Operating the memory function

WARNING
Risk of an accident if the memory function is used while driving

If you use the memory function on the driver's side while driving, you could lose control of the vehicle as a result of the adjustments being made.

- Only use the memory function on the driver's side when the vehicle is stationary.

WARNING
Risk of entrapment when adjusting the seat with the memory function

When the memory function adjusts the seat, you and other vehicle occupants – particularly children – could become trapped.

- During the adjustment process of the memory function, make sure that no one has any body parts in the sweep of the seat.
- If someone becomes trapped, press a preset position button or seat adjustment switch immediately.

WARNING
Danger of entrapment when memory function is activated by children

When children activate the memory function, they can get trapped, especially if they are unsupervised.

- Never leave children unattended in the vehicle.
- When leaving the vehicle, always take the key with you and lock the vehicle.

You can use the memory function when the ignition is switched off.

STORING

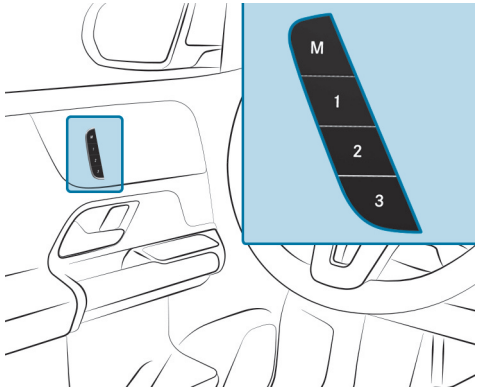

- Set the desired position for all systems.
- Briefly press memory button M and then press preset position 1, 2 or 3 within three seconds.

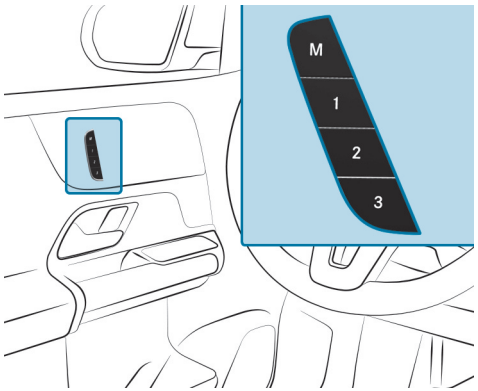

- **To call up:** press and briefly hold one of preset position buttons 1, 2 or 3.

  After releasing the button, all systems are moved into the stored position.

Stowage areas

Notes on loading the vehicle

Objects in the deployment area of an airbag may prevent the airbag from functioning correctly. Observe the notes on airbags (→ page 137).

WARNING
Risk of injury from unsecured items in the vehicle

If objects, luggage or loads are not secured or not secured sufficiently, they could slip, tip over or be thrown around and thereby hit vehicle occupants.

There is a risk of injury, particularly in the event of sudden braking or a sudden change in direction.

- Always stow objects in such a way that they cannot be thrown around.
- Before the journey, secure objects, luggage or loads against slipping or tipping over.

WARNING
Risk of injury due to unsuitable stowage of objects

If objects in the vehicle interior are stowed incorrectly, they may slide or be thrown around and hit vehicle occupants. In addition, cup holders, open stowage spaces and mobile phone receptacles may not, in the event of an accident, retain all the objects they contain.

There is a risk of injury, particularly in the event of braking manoeuvres or abrupt changes in direction.

- Always stow objects in such a way that they cannot be thrown around in these or similar situations.
- Always ensure that objects do not protrude from stowage compartments, luggage nets or stowage nets.
- Close the lockable stowage spaces before starting a journey.
- Stow and secure objects that are heavy, hard, pointed, sharp-edged, fragile or too large in the load compartment.

WARNING
Risk of accident due to objects in the driver's and front-passenger footwell

Objects in the driver's and front-passenger footwell may impede pedal travel or block a depressed pedal.

This jeopardises the operating- and road safety of the vehicle.

- Stow all objects in the vehicle securely so that they cannot get into the driver's or front-passenger footwell.
- Always ensure that the pedals have sufficient free space.
- Always fit the floor mats securely and as prescribed.
- Do not use loose floor mats and do not place floor mats on top of one another.

Vehicles with automatic front passenger airbag shut-off: objects trapped under the front passenger seat may interfere with the function of the automatic front passenger airbag shutoff or damage the system. Therefore please observe the notes on the function of automatic front passenger airbag shutoff (⟶ page 125).

WARNING
- Risk of accident or injury when using the cup holder while the vehicle is in motion

The cup holder cannot hold a container secure while the vehicle is in motion.

If you use a cup holder while the vehicle is in motion, the container may be flung around and liquids could be spilled. The vehicle occupants may come into contact with the liquid and if it is hot, they could be scalded. You could be distracted from traffic conditions and you may lose control of the vehicle.

- Only use the cup holder when the vehicle is stationary.
- Only use the cup holder for containers of the right size.
- Always close the container, particularly if the liquid is hot.

NOTE
Damage to the cup holder

The cup holder can be damaged when folding back the rear seat armrest. When open, the cup holder can be damaged by body weight.

- The rear seat armrest can only be folded back when the cup holder is closed.
- Do not sit or support yourself on the cup holder when it is open.

NOTE
Damage to the vehicle caused by spilled liquids

If liquids are spilled in the vehicle, parts of the vehicle may be damaged.

- ► Always securely close containers containing liquids that you have brought with you.
- ► Clean the vehicle as soon as possible if liquids are spilled.
- ► If larger quantities of liquids are spilled, have the vehicle checked in a qualified specialist workshop.

NOTE
Damage to the rear armrest due to body weight

When folded out, the rear armrest can be damaged by body weight.

- ► Do not sit or support yourself on the rear seat armrest.

NOTE
Damage to the load compartment floor caused by uneven loading or sudden stresses

The load compartment floor can be damaged by unevenly distributed loads or sudden stresses.

- ► Distribute the load evenly.
- ► Drive with due care when the vehicle is carrying a load. Avoid sudden starting, braking and steering manoeuvres or fast cornering.

ⓘ Leather is a natural product. It has natural surface characteristics, such as differences in structure, marks caused by growth and injury or subtle colour differences. These surface characteristics are particular to leather, and are not material defects. Leather is also subject to a natural ageing process, which changes the surface characteristics.

THE HANDLING CHARACTERISTICS OF YOUR VEHICLE ARE DEPENDENT ON THE DISTRIBUTION OF THE LOAD WITHIN THE VEHICLE. YOU SHOULD BEAR THE FOLLOWING IN MIND WHEN LOADING THE VEHICLE:

- Never allow the payload including occupants to exceed the maximum permissible gross mass or the permissible axle loads for the vehicle.
  These are shown on the vehicle identification plate (⟶ page 737).
- The load must not protrude above the upper edge of the seat backrests.
- Always use the partitioning net when carrying objects in the load compartment.
- Always place the load behind unoccupied seats if possible.

- Secure the load using the tie-down eyes and distribute the tension evenly (⟶ page 47).

NOTES ON CARRYING A ROOF LOAD:

- Distribute the roof load and vehicle load evenly, and place heavy objects at the bottom. Also observe the notes on loading the vehicle.
- Drive with care. Avoid sudden starting, braking and steering manoeuvres or fast cornering.
- When carrying a roof load or when the vehicle is fully loaded or occupied, select drive program [E] or [C]. These are configured for good stability (⟶ page 303).

ⓘ Further information on storage compartments and stowage facilities can be found in the Digital Owner's Manual.

Stowage spaces in the vehicle interior

OVERVIEW OF THE FRONT STORAGE COMPARTMENTS

⚠ **WARNING**
Risk of injury due to objects being stowed incorrectly

If objects in the vehicle interior are stowed incorrectly, they may slide or be thrown around and hit vehicle occupants. In addition, cup holders, open stowage spaces and mobile phone receptacles will not always be able to retain all objects that they contain in the event of an accident.

There is a risk of injury, particularly in the event of sudden braking or a sudden change in direction.

► Always stow objects such that they cannot be thrown around in such situations.

► Always make sure that objects do not protrude from stowage spaces, luggage nets or stowage nets.

► Close the lockable stowage spaces before starting a journey.

► Always stow and secure heavy, hard, pointed, sharp-edged, fragile or bulky objects in the boot/load compartment.

Observe the information on loading the vehicle.

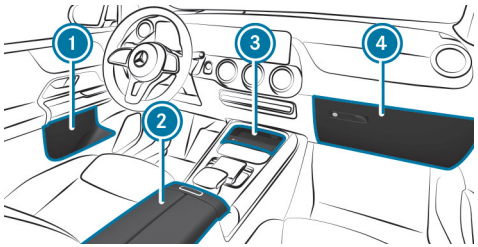

1. Stowage spaces in the doors
2. Storage compartment in the armrest with a multimedia and USB connection
   Depending on the vehicle's equipment, there may be a 12 V socket in the storage compartment
3. Storage compartment in the front centre console with a USB port
4. Glove compartment

LOCKING/UNLOCKING THE GLOVE COMPARTMENT

WARNING
Risk of injury due to objects being stowed incorrectly

If objects in the vehicle interior are stowed incorrectly, they can slide or be thrown around and hit vehicle occupants. In addition, cup holders, open stowage spaces and mobile phone brackets cannot always retain all objects they contain.

There is a risk of injury, particularly in the event of sudden braking or a sudden change in direction.

- ► Always stow objects in such a way that they cannot be thrown around in such situations.
- ► Always make sure that objects do not protrude from stowage spaces, luggage nets or stowage nets.
- ► Close the lockable stowage spaces before starting a journey.
- ► Always stow and secure heavy, hard, pointed, sharp-edged, fragile or bulky objects in the boot.

Observe the notes on loading the vehicle.

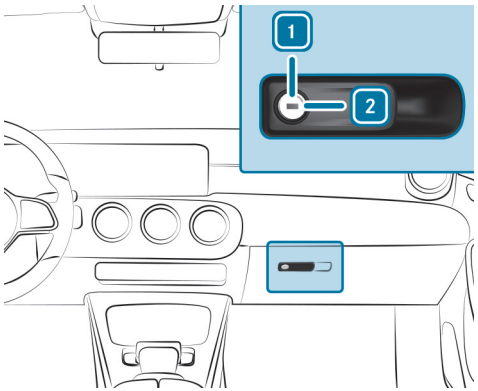

► Turn the emergency key a quarter turn clockwise 2 (to lock) or anti-clockwise 1 (to unlock).

Through-loading feature in the rear bench seat (EASY-PACK Quickfold)

FOLDING THE REAR SEAT BACKREST FORWARDS

WARNING
Risk of becoming trapped when adjusting the seats

When you adjust a seat, you may trap yourself or a vehicle occupant.

► When adjusting a seat, make sure that no one has any body parts in the sweep of the seat.

WARNING
Risk of becoming trapped if the seat is not engaged

The seat does not engage when folded forwards. The seat can fold backwards unexpectedly, e.g. when accelerating, braking or in the event of an abrupt change of direction or an accident.

People in the seat's sweep can become trapped.

► If a seat is folded forwards, always fold it back before driving off.

► Make sure that the seat is engaged.

WARNING
Risk of injury due to seat backrests folded forwards

If the seat backrest of the rear seat is folded forwards, persons in the third row of seats may hit parts of the seat mechanism, especially in the event of an accident, braking manoeuvre or abrupt change of direction.

► If there is a person in the third row of seats, the rear seat in front of them must be folded back to the driving position before the journey begins.

► Persons in the third row of seats should not rest their legs on a seat backrest that has been folded forwards.

Always ensure that all vehicle occupants have their seat belts fastened correctly and are sitting properly. Particular attention must be paid to children.

If you no longer require the folded-down seat backrest as a loading area, fold the backrest back into place.

Requirements

- The area into which the seat is folded is clear.
- The area under the rear bench seat is clear.
- The armrest on the second row of seats is folded back and the cup holders are empty.

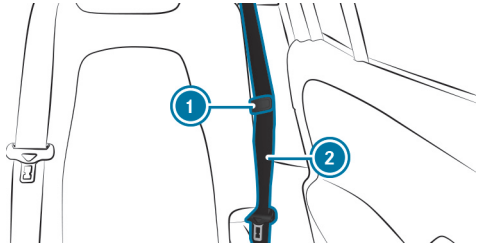

► Clamp the seat belt strap on seat belt (2) in seat belt strap holder (1).

When the left-hand seat backrest is folded forwards, the centre seat backrest will also be folded forwards.

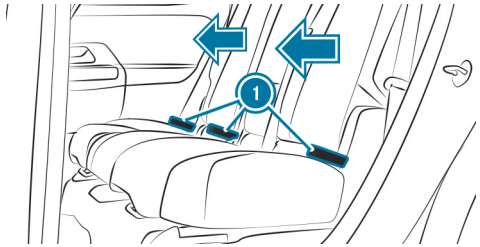

► Move the driver's or front passenger seat forwards, if necessary.

► If necessary, release the head restraints for the seat backrest and push them down (⟶ page 219).

► **Left and right seat backrests:** pull one of release loops (1).

The seat backrest will automatically fold forwards.

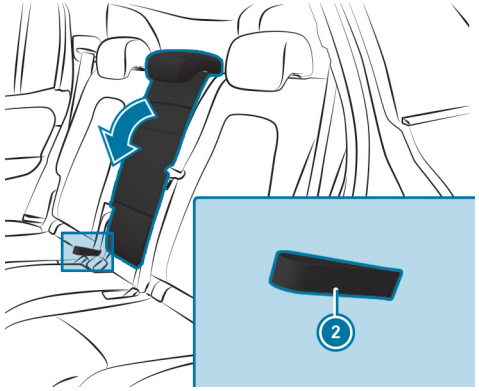

► **Centre seat backrest:** pull release loop (2).

The seat backrest will automatically fold forwards.

ⓘ When the seat backrests on the second and third rows of seats are folded forwards, you can push the rear bench seat on the second row of seats back. This will then provide a continuous load compartment surface. Ensure that the area between the rows of seats is clear.

FOLDING BACK THE REAR SEAT BACKREST

WARNING
Risk of becoming trapped when adjusting the seats

When you adjust a seat, you may trap yourself or a vehicle occupant.

- ► When adjusting a seat, make sure that no one has any body parts in the sweep of the seat.

WARNING
Risk of accident if the rear bench seat, rear seat and seat backrest are not engaged

The rear bench seat, rear seat and seat backrest may fold forwards, even while the vehicle is in motion.

- As a result, the vehicle occupant will be pressed into the seat belt with increased force. The seat belt will not be able to protect as intended and could cause additional injury.
- Objects or loads in the boot or load compartment cannot be restrained by the seat backrest.

- ► Make sure that the rear bench seat, the rear seat and the seat backrest are engaged before every trip.

If the rear seat backrest is not engaged and locked in place, the red lock verification indicator will be visible.

NOTE
Damage caused by trapping the seat belt when folding back the seat backrest

The seat belt could become trapped and thus be damaged when the seat backrest is folded back.

- ► Make sure that the seat belt is not trapped when folding back the seat backrest.

If the left and centre seat backrests have been folded forwards together, fold the left seat backrest back first.

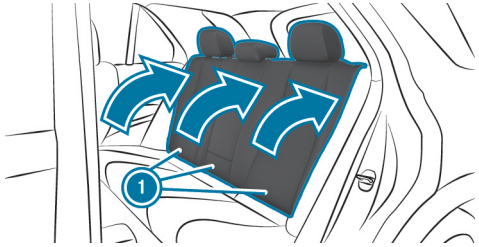

- ► Move the driver's or front passenger seat forwards, if necessary.
- ► Swivel seat backrest (1) back until it engages.
  The seat backrest will remain in the cargo position.
- ► After the seat backrest has been folded back, check the position of the head restraint and set it to the correct position (→ page 219).

FOLDING THE SEAT BACKREST ON THE THIRD ROW OF SEATS FORWARDS

WARNING
Risk of becoming trapped when adjusting the seats

When you adjust a seat, you may trap yourself or a vehicle occupant.

► When adjusting a seat, make sure that no one has any body parts in the sweep of the seat.

WARNING
Risk of an accident because the seat and the seat backrest are not engaged

The seat and seat backrest can fold forwards.

THERE IS A RISK OF THE FOLLOWING, IN PARTICULAR:

- The vehicle occupant may be pressed against the seat belt. The seat belt cannot protect as intended and could cause additional injury.
- The seat backrest will not be able to restrain objects or goods in the load compartment.

ALWAYS ENSURE THAT THE SEAT AND SEAT BACKREST ARE ENGAGED, IN PARTICULAR:

- Before carrying passengers on a seat with easy entry and exit feature.
- After the seat has been adjusted.
- After the easy entry and exit feature has been used.
- After the load compartment enlargement has been folded forwards

Always ensure that all vehicle occupants have their seat belts fastened correctly and are sitting properly. Particular attention must be paid to children.

You can fold the backrests of the second row of seats forwards to get in or out.

WARNING
Risk of becoming trapped if the seat is not engaged

The seat does not engage when folded forwards. The seat can fold backwards unexpectedly, e.g. when accelerating, braking or in the event of an abrupt change of direction or an accident.

People in the seat's sweep can become trapped.

► If a seat is folded forwards, always fold it back before driving off.

► Make sure that the seat is engaged.

Requirements

- The area into which the seat is folded is clear.
- The area under the third row of seats is clear.
- The cup holders on the third row of seats are empty.
- The load compartment cover has been removed.

If you no longer require the folded-down seat backrest as a load area, fold the backrest back into place.

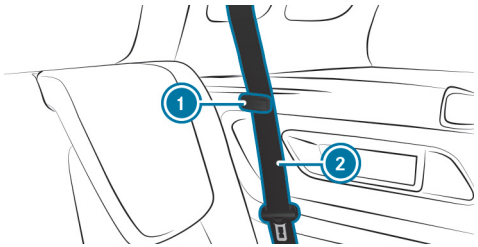

- Clamp the seat belt strap on seat belt (2) in seat belt strap holder (1).

NOTE
Damage to the release loops due to the attachment of objects

The release loops of the seat backrests in the rear may be damaged due to the attachment of objects.

- Only attach objects to the tie-down eyes.

The release loops are located in the load compartment to the side of the bottom part of the seat backrests.

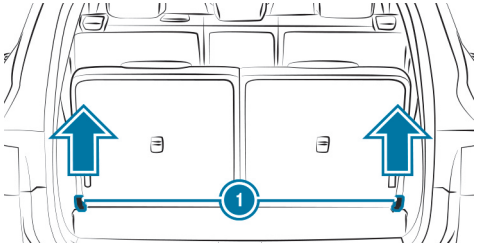

Release the loops on the rear sides

- Move the second row of seats forwards and move the seat backrests into the cargo position (⟶ page 243).
- Release the head restraints on the third row of seats and push them down (⟶ page 219).
- Pull one of red release loops (1).
  The seat backrest will automatically fold forwards.
- Push the seat backrest down until it engages.

When the seat backrests on the second and third rows of seats are folded forwards, you can push the rear bench seat on the second row of seats back. This will then provide a continuous load compartment surface. Ensure that the area between the rows of seats is clear.

FOLDING BACK THE SEAT BACKREST ON THE THIRD ROW OF SEATS

WARNING
Risk of becoming trapped when adjusting the seats

When you adjust a seat, you may trap yourself or a vehicle occupant.

- When adjusting a seat, make sure that no one has any body parts in the sweep of the seat.

WARNING
Risk of accident if the rear bench seat, rear seat and seat backrest are not engaged

The rear bench seat, rear seat and seat backrest may fold forwards, even while the vehicle is in motion.

- As a result, the vehicle occupant will be pressed into the seat belt with increased force. The seat belt will not be able to protect as intended and could cause additional injury.
- Objects or loads in the boot or load compartment cannot be restrained by the seat backrest.

► Make sure that the rear bench seat, the rear seat and the seat backrest are engaged before every trip.

NOTE
Damage caused by trapping the seat belt when folding back the seat backrest

The seat belt could become trapped and thus be damaged when the seat backrest is folded back.

► Make sure that the seat belt is not trapped when folding back the seat backrest.

Requirements:

- The seats and the seat backrests on the second row of seats have been moved forwards sufficiently.

NOTE
Damage to the release loops due to the attachment of objects

The release loops of the seat backrests in the rear may be damaged due to the attachment of objects.

► Only attach objects to the tie-down eyes.

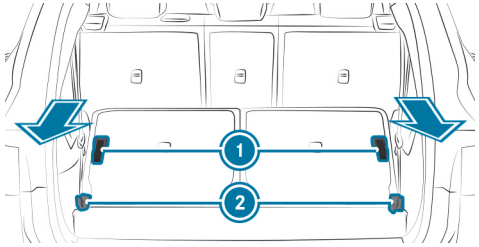

Loops on the rear sides

► Briefly pull one of red release loops (2).

► **To fold the left or right seat backrest back:** pull one of black release loops (1).

ADJUSTING THE ANGLE OF THE REAR SEAT BACKRESTS (CARGO POSITION)

WARNING
Risk of accident and injury due to the rear bench seat and seat backrest not being engaged

The rear bench seat and seat backrest may fold forwards, even when you are driving.

- As a result, the vehicle occupant will be pushed into the seat belt with increased force. The seat belt cannot provide the intended protection and could cause additional injury to the vehicle occupant.
- A child restraint system is no longer properly supported or correctly positioned and can no longer fulfil its function as intended.
- Objects or loads in the boot or load compartment will not be restrained by the seat backrest.

► Before each journey, make sure that the rear bench seat and seat backrest are fully engaged as described.

In vehicles with longitudinally adjustable rear seats, you can also adjust the angle of the rear seat backrests. There are several possible detent positions.

NOTE
Damage to the release loops due to the attachment of objects

The release loops of the seat backrests in the rear may be damaged due to the attachment of objects.

► Only attach objects to the tie-down eyes.

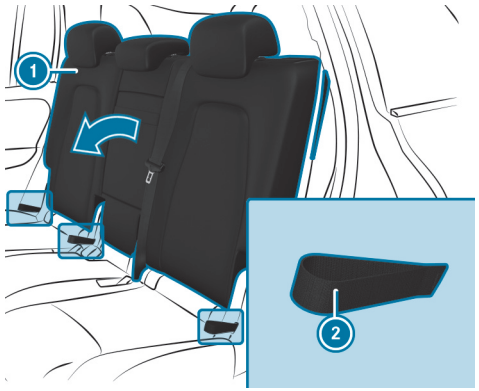

► Pull one of release loops (2) forwards.
Corresponding seat backrest (1) will be unlocked.

► Move seat backrest (1) to the desired angle.

► Let go of release loop (2).

Load compartment cover

NOTES ON THE LOAD COMPARTMENT COVER

WARNING
Risk of injury or death due to poorly secured objects

The load compartment cover alone cannot secure or restrain heavy objects, items of luggage or heavy loads.

You could be hit by an unsecured load, particularly in the event of abrupt changes in direction, sudden braking or an accident.

- Always stow objects in such a way that they cannot be thrown around.
- Secure objects, luggage or loads against slipping or tipping over, e.g. by using lashing material, even if you are using the load compartment cover.

NOTE
Damage to the load compartment cover when loading the vehicle

The load compartment cover may be damaged when loading the vehicle.

- Do not place any objects on the load compartment cover.

Vehicles with a third row of seats: when the third row of seats is in use, the load compartment cover on the seat backrests on the second row of seats will be removed.

ROLLING THE LOAD COMPARTMENT COVER IN/OUT

WARNING
Risk of injury or death due to poorly secured objects

The load compartment cover alone cannot secure or restrain heavy objects, items of luggage or heavy loads.

You could be hit by an unsecured load, particularly in the event of abrupt changes in direction, sudden braking or an accident.

- Always stow objects in such a way that they cannot be thrown around.
- Secure objects, luggage or loads against slipping or tipping over, e.g. by using lashing material, even if you are using the load compartment cover.

NOTE
Damage to the load compartment cover when loading the vehicle

The load compartment cover may be damaged when loading the vehicle.

- Do not place any objects on the load compartment cover.

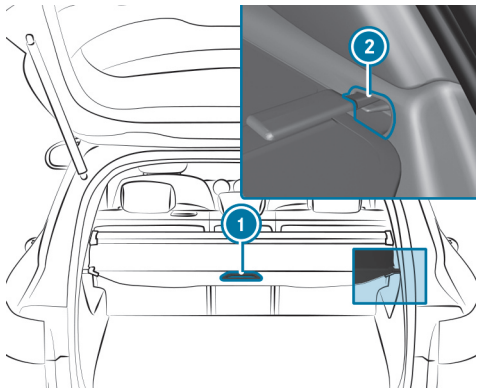

- **To extend:** pull the load compartment cover back using the grab handle (1) and hook it into the holders (2) on the left and right.

RETRACTING

- Release the load compartment cover from the holders (2) on the left and right.
- Guide the load compartment cover forwards using the grab handle (1) until it is fully retracted.

FITTING/REMOVING THE LOAD COMPARTMENT COVER

Requirements

- The load compartment cover is rolled up.

REMOVING THE LOAD COMPARTMENT COVER

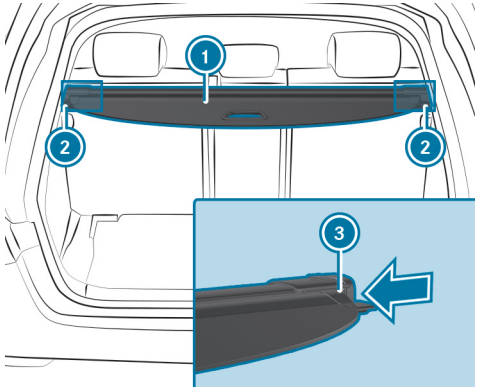

- Press in the end cap of load compartment cover (1) on the right- and left-hand side in the direction of the arrow using the handle on the lower edge (3).
- Push load compartment cover (1) into anchorage (2) on the opposite side.
- Take load compartment cover (1) out by pulling it upwards.

INSTALLING THE LOAD COMPARTMENT COVER

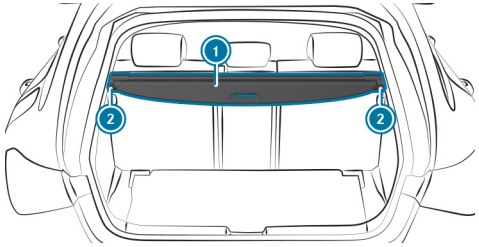

- Place load compartment cover (1) in anchorage (2) on the right- or left-hand side.

- Press in the end cap of load compartment cover (1) on the opposite side and insert load compartment cover (1) into other anchorage (2).

Attaching/removing the partitioning net

WARNING
Risk of injury or death due to poorly secured objects

The partitioning net alone cannot secure or restrain heavy objects, items of luggage or heavy loads.

You could be hit by an unsecured load, particularly in the event of abrupt changes in direction, sudden braking or an accident.

- Always stow objects in such a way that they cannot be thrown around.
- Secure objects, luggage or loads against slipping or tipping over, e.g. by using lashing material, even if you are using the partitioning net.

For safety reasons, always use a partitioning net when transporting a load.

Damaged partitioning nets can no longer fulfil their functions and must be replaced. Visit a qualified specialist workshop.

ATTACHING

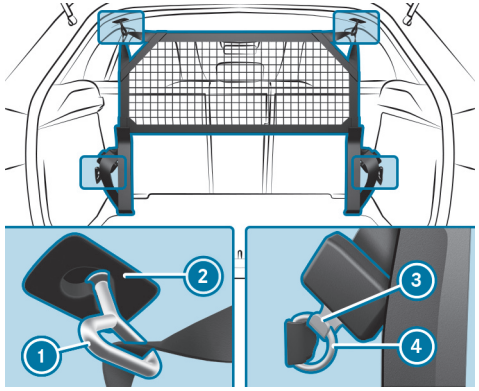

Partitioning net without load compartment enlargement

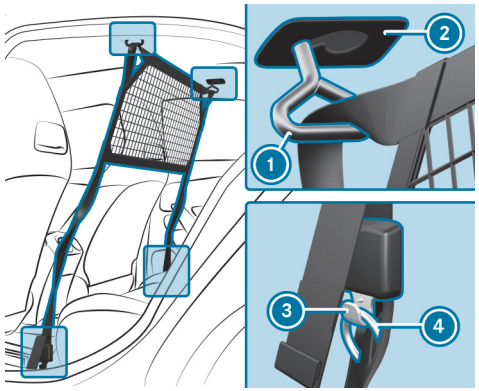

Partitioning net with load compartment enlargement

- Hook partition net (1) into holders (2) on the left and right on the roof lining.

- Without load compartment enlargement: attach hooks (3) to tie-down eyes (4) on the left and right in such a way that hooks (3) point backwards.
- With load compartment enlargement: attach hooks (3) to tie-down eyes (4) on the left and right in such a way that hooks (3) point to the door.
- Pull on the loose ends of the lashing straps at the same time until the partitioning net (1) is tight and the top edge of partitioning net (1) is horizontal.

REMOVING

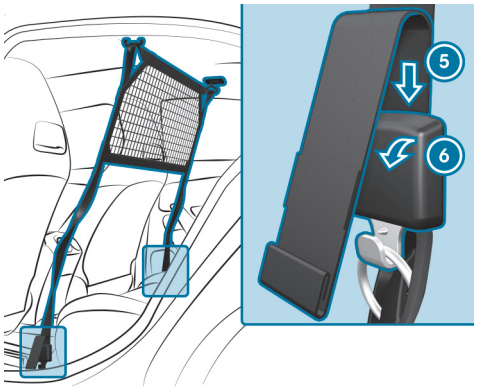

- Turn the buckle of the lashing strap in the direction of arrow (6).
- Slide the loose end of lashing strap into the buckle in the direction of arrow (5) until the lashing straps are loose.
- Remove hooks (3) from tie-down eyes (4) on the left and right.
- Remove partitioning net (1) from brackets (2) on the roof lining on the left and right.

Overview of the tie-down eyes

Observe the notes on loading the vehicle (⟶ page 232).

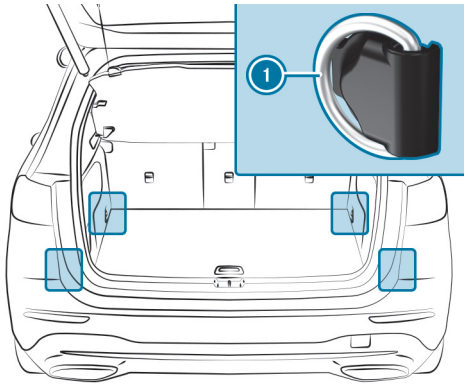

(1) Tie-down eyes (vehicles with through-loading feature in the rear bench seat)

Overview of bag hooks

WARNING
Risk of injury when using bag hooks with heavy objects

The bag hooks cannot restrain heavy objects or items of luggage.

Objects or items of luggage may be flung around and hit vehicle occupants.

- Only hang light objects on the bag hooks.
- Never hang hard, sharp-edged or fragile objects on the bag hooks.

Observe the notes on loading the vehicle (⟶ page 232).

Subject the bag hooks to a maximum load of 3 kg and do not attach any goods to them.

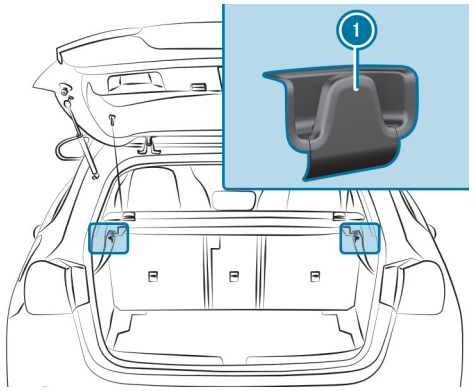

(1) Bag hook

Overview of clothes hooks on the tailgate

Observe the notes on loading the vehicle (⟶ page 232).

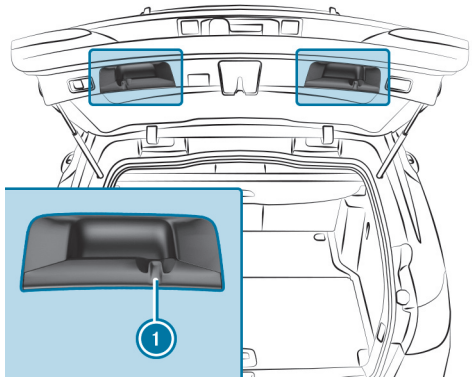

(1) Clothes hook

The clothes hooks are not suitable for hanging heavy objects as this can cause the tailgate to lower automatically. Use the clothes hooks only for light objects such as jackets.

Opening or closing the stowage space under the load compartment floor

WARNING
Risk of injury due to an open load compartment floor

If you drive with the load compartment floor open, objects could be flung around and hit vehicle occupants as a result. There is a risk of injury, particularly in the event of sudden braking or a sudden change in direction.

- Always close the load compartment floor before a journey.

OPENING

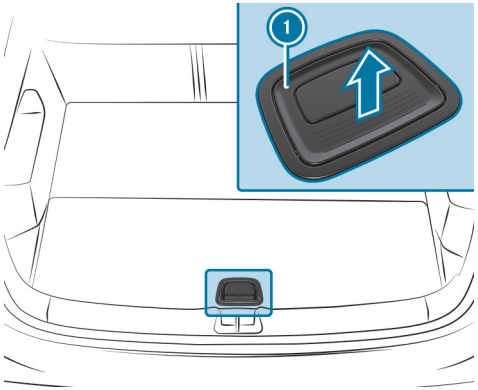

- ► Pull handle (1) upwards.
- ► Lift the load compartment floor up using handle (1).

CLOSING

- ► Fold the load compartment floor down and then press handle (1) down until it engages.

Attaching a roof luggage rack

WARNING
Risk of accident due to exceeding the maximum roof load

The vehicle centre of gravity and the usual driving characteristics as well as the steering and braking characteristics alter.

If you exceed the maximum roof load, the driving characteristics, as well as steering and braking, will be greatly impaired.

- ► Never exceed the maximum roof load and adjust your driving style.

You will find information on the maximum roof load in the "Technical data" section.

NOTE
Vehicle damage due to failure to observe the maximum permissible clearance height

If the vehicle height exceeds the maximum permissible clearance height, the roof and other vehicle parts may be damaged.

- ► Please observe the indicated maximum clearance height.
- ► If the vehicle exceeds the permissible clearance height, do not drive in.
- ► Take the modified vehicle height in the case of roof superstructures or other carrier systems into account.

NOTE
Damage to the panorama sliding sunroof due to non-approved roof luggage racks

The panorama sliding sunroof may be damaged by the roof luggage rack if you attempt to open it when using a roof luggage rack not tested and approved for Mercedes-Benz.

► When a roof luggage rack is fitted, open the panorama sliding sunroof only if this has been tested and approved for Mercedes-Benz.

The panorama sliding sunroof may be raised to allow ventilation of the vehicle interior.

NOTES ON DRIVING WITH ROOF LOAD

- Distribute the roof load and vehicle load evenly, and place heavy objects at the bottom. Also observe the notes on loading the vehicle (⟶ page 232) .
- Drive carefully, avoiding abrupt starting, braking and steering as well as fast cornering.
- When transporting a roof load and with a fully laden or fully occupied vehicle, select one of the drive programs E and C. These are configured for good stability (⟶ page 303).

► Secure the roof luggage rack to the roof railing.

► Observe the manufacturer's installation instructions.

Cup holders

Fitting the cup holder in or removing it from the centre console

WARNING
- Risk of accident or injury when using the cup holder while the vehicle is in motion

The cup holder cannot hold a container secure while the vehicle is in motion.

If you use a cup holder while the vehicle is in motion, the container may be flung around and liquids could be spilled. The vehicle occupants may come into contact with the liquid and if it is hot, they could be scalded. You could be distracted from traffic conditions and you may lose control of the vehicle.

- ► Only use the cup holder when the vehicle is stationary.
- ► Only use the cup holder for containers of the right size.
- ► Always close the container, particularly if the liquid is hot.

DEPENDING ON THE VEHICLE'S EQUIPMENT, THE FOLLOWING CUP HOLDERS WILL BE AVAILABLE:

- In the front stowage compartment of the centre console
- In the armrests of the rear seats
- Between the seats on the third row of seats

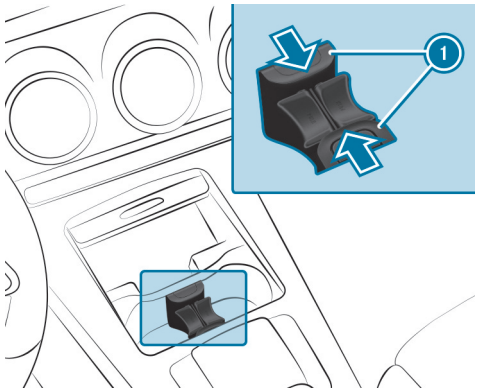

Cup holder in the stowage compartment with cover

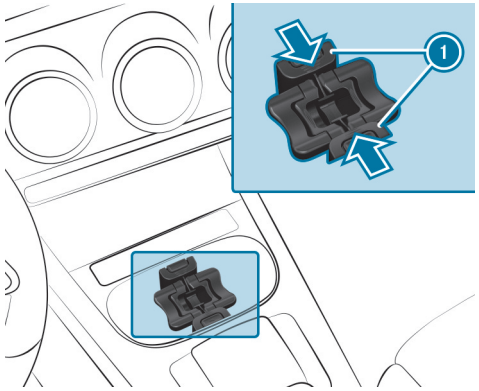

Cup holder in the stowage compartment without cover

- **To remove:** slide snap-in brackets (1) of the cup holder inwards until they are unlocked.
- Pull the cup holder up and out of the stowage compartment.

The cup holder and the rubber mat beneath it can be removed for cleaning, e.g. with clean, lukewarm water.

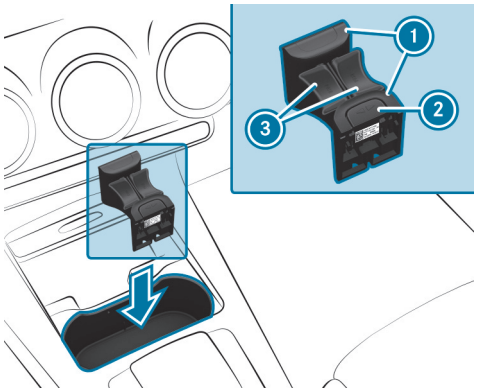

Cup holder in the stowage compartment with cover

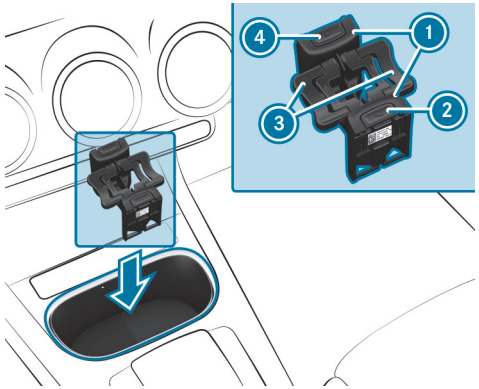

Cup holder in the stowage compartment without cover

- **To fit:** if necessary, open the stowage compartment cover and insert the cup holder, as shown, into the stowage compartment with the label facing the vehicle interior.
- Slide the cup holder onto the bars in the stowage compartment.
- Slide snap-in brackets (1) outwards until they engage.
- Cup holder in the stowage compartment with cover: press button (2).
- Cup holder in the stowage compartment without cover: press button (2) and/or (4).

  Wings (3) will fold upwards.

The cup holder wings can be folded downwards and locked. The cup holder's holding function will then not be available.

Opening or closing the cup holders in the rear armrest

WARNING
- Risk of accident or injury when using the cup holder while the vehicle is in motion

The cup holder cannot hold a container secure while the vehicle is in motion.

If you use a cup holder while the vehicle is in motion, the container may be flung around and liquids could be spilled. The vehicle occupants may come into contact with the liquid and if it is hot, they could be scalded. You could be distracted from traffic conditions and you may lose control of the vehicle.

- Only use the cup holder when the vehicle is stationary.
- Only use the cup holder for containers of the right size.
- Always close the container, particularly if the liquid is hot.

NOTE
Damage to the rear armrest due to body weight

When folded out, the rear armrest can be damaged by body weight.

- Do not sit or support yourself on the rear seat armrest.

NOTE
Damage to the cup holder

The cup holder can be damaged when folding back the rear seat armrest. When open, the cup holder can be damaged by body weight.

- The rear seat armrest can only be folded back when the cup holder is closed.
- Do not sit or support yourself on the cup holder when it is open.

Depending on its equipment, your vehicle will have a rear armrest with a cup holder.

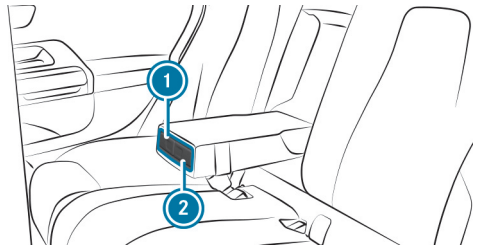

- **To open:** press cup holder 1 or 2.
  Cup holder 1 or 2 will extend automatically.
- **To close:** push cup holder 1 or 2 back until it engages.

Ashtray and cigarette lighter

Using the ashtray

DURING A JOURNEY

- Place the closed ashtray in the front door stowage compartment.
- Check that it is secure.
- Comply with the notes on loading the vehicle (⟶ page 232).

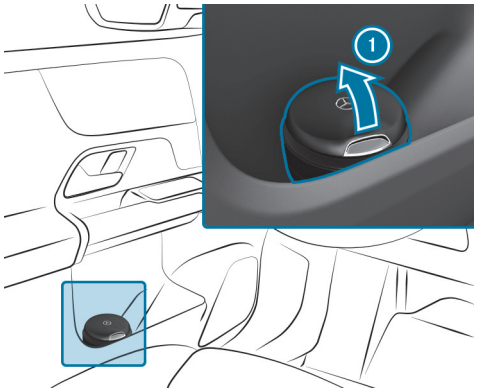

- **To open:** fold lid (1) upwards.

ⓘ Twist the top part of the ashtray to remove it for cleaning, e.g. with clean, lukewarm water, or for emptying.

Using the cigarette lighter

⚠ **WARNING**
Risk of fire and injury from hot cigarette lighter

You can suffer burns if you touch the hot heating element or the hot socket of the cigarette lighter.

IN ADDITION, FLAMMABLE MATERIALS CAN CATCH FIRE IF:

- you drop the hot cigarette lighter.
- children e.g. hold the hot cigarette lighter to objects.

- Always hold the cigarette lighter by the knob.
- Always make sure that the cigarette lighter is out of the reach of children.
- Never leave children unattended in the vehicle.

Requirements

- The vehicle is switched on.

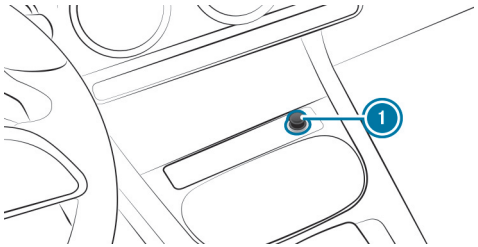

- Press in cigarette lighter (1).

  The cigarette lighter will pop out automatically when the heating element is red-hot.

Sockets

Using the 12 V socket

Requirements:

- Only devices up to a maximum of 180 W (15 A) are permissible.

DEPENDING ON THE VEHICLE EQUIPMENT, THE VEHICLE HAS THE FOLLOWING 12 V SOCKETS:

- In the storage compartment in the front centre console
- In the storage compartment under the front armrest
- In the load compartment

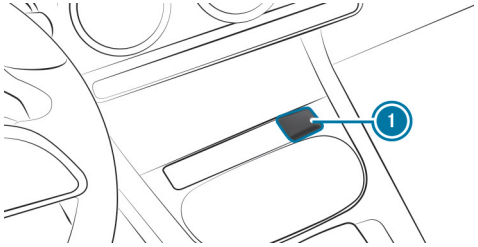

Example: 12 V socket in the storage compartment in the front centre console

► Fold up cover (1) of the socket.

► Insert the plug of the device.

12 V socket in the storage compartment with cover: if you have connected a device to the 12 V socket, leave the cover of the storage compartment open.

Using the 115 V socket in the rear passenger compartment

⚠ **DANGER**
Risk of fatal injuries due to a damaged connecting cable or a damaged socket

You could receive an electric shock if the connecting cable or the 115 V power socket is pulled out of the trim or is damaged or wet.

► Use only connecting cables that are dry and free of damage.

► When the vehicle is switched off, make sure that the 115 V power socket is dry.

► Immediately have the 115 V power socket checked or replaced at a qualified specialised workshop if it is damaged or has been pulled out of the trim.

► Never plug the connecting cable into a 115 V power socket that is damaged or has been pulled out of the trim.

DANGER
Risk of death due to using the socket incorrectly

IN PARTICULAR, YOU COULD RECEIVE AN ELECTRIC SHOCK:

- if you touch the inside of the socket
- if you insert unsuitable devices or objects into the socket

► Do not touch the inside of the socket.

► Only connect suitable devices to the socket.

Make sure that no liquids get into the 115 V socket.

When the 115 V socket is not in use, keep the socket flap closed.

Requirements

- The device is equipped with a suitable plug which conforms to the standards specific to the country you are in.
- A device up to a maximum of 150 W (1.3 A) is used.
- Do not use multiple socket outlets.

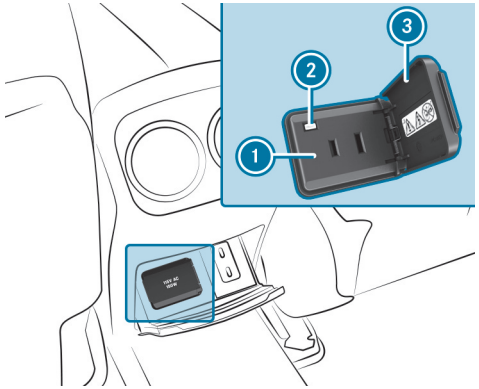

► Open socket flap (3).

► Insert the plug of the device into 115 V socket (1).

When the on-board electrical system voltage is sufficient, indicator lamp (2) lights up.

Overview of USB ports

DEPENDING ON THE VEHICLE EQUIPMENT, THE VEHICLE HAS THE FOLLOWING USB PORTS:

- in the stowage compartment of the cockpit armrest (⟶ page 47)
- in the front centre console next to the mobile phone stowage compartment
- in the rear centre console
- vehicles with three seat rows: in the side stowage compartment of the load compartment

Depending on the vehicle equipment, the design of the stowage compartment and the number of USB ports in the rear centre console may vary.

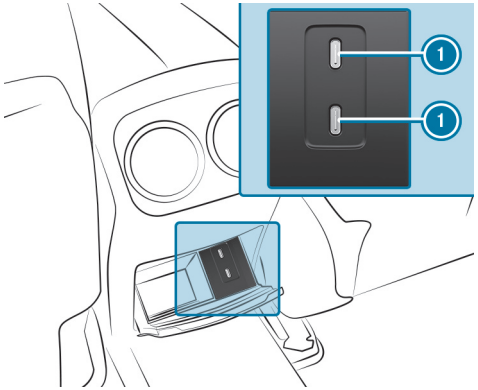

Example: USB ports in the rear centre console

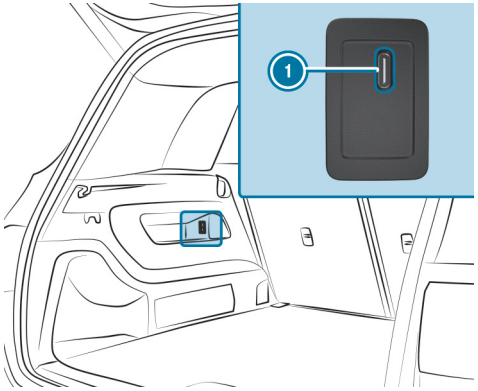

USB ports in the load compartment of vehicles with three seat rows

When the vehicle is switched on, you can charge a USB device, such as a mobile phone, at USB ports (1) using a suitable charging cable.

Charging a mobile phone wirelessly

WARNING
Risk of injury due to objects being stowed incorrectly

If objects in the vehicle interior are stowed incorrectly, they may slide or be thrown around and hit vehicle occupants. In addition, cup holders, open stowage spaces and mobile phone receptacles will not always be able to retain all objects that they contain in the event of an accident.

There is a risk of injury, particularly in the event of sudden braking or a sudden change in direction.

- Always stow objects such that they cannot be thrown around in such situations.
- Always make sure that objects do not protrude from stowage spaces, luggage nets or stowage nets.
- Close the lockable stowage spaces before starting a journey.
- Always stow and secure heavy, hard, pointed, sharp-edged, fragile or bulky objects in the boot/load compartment.

Observe the information on loading the vehicle.

Requirements:

- The mobile phone is suitable for wireless charging.

A list of compatible mobile phones can be found at: https://www.mercedes-benz-mobile.com

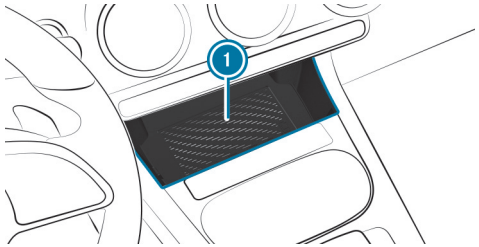

- Place the mobile phone as close to the centre of the marked surface on pad (1) as possible with the display facing up.

  When a message is shown in the multimedia system, the mobile phone is being charged.

  Malfunctions during the charging process are shown in the central display.

The mat can be removed for cleaning, e.g. using clean, lukewarm water.

STOWAGE COMPARTMENT WITHOUT COVER
Make sure the mobile phone is properly stored and secured to prevent it from falling out while you are driving.

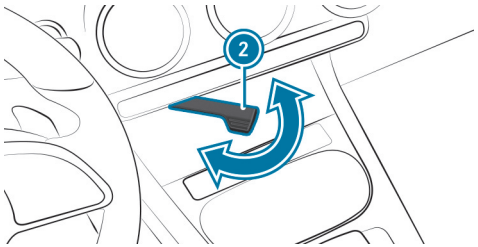

- **To secure the mobile phone:** swing lever (2) out.

RADIO EQUIPMENT APPROVAL NUMBERS FOR BRAZIL

This device operates in secondary mode, whereby it has no protection against harmful interference, not even from the same type of stations, and must not cause interference with systems operating on a primary basis.

This product is permitted in accordance with the procedures defined in Directive 242/2000 by the Brazilian telecommunications agency ANATEL and meets the applicable technical requirements.

More information is available on the ANATEL website. www.anatel.gov.br

- For more information on the declaration of conformity for vehicle components which receive and/or transmit radio waves see (⟶ page 99).

Fitting/removing the floor mats

WARNING
Risk of accident due to objects in the driver's footwell

Objects in the driver's footwell may impede pedal travel or block a depressed pedal.

This will jeopardise the operating and road safety of the vehicle.

- Stow all objects in the vehicle securely so that they cannot get into the driver's footwell.
- Make sure that there is always sufficient clearance for the pedals.
- Always fit the floor mats securely and as prescribed.
- Do not use loose floor mats and do not place floor mats on top of one another.

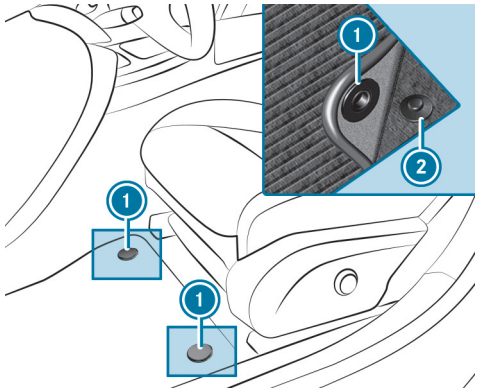

- **To fit:** slide the corresponding seat backwards and lay the floor mat in the footwell.
- Press studs (1) onto holders (2).
- Adjust the corresponding seat.
- **To remove:** slide the corresponding seat backwards and pull the floor mat off holders (2).
- Remove the floor mat.

Light and sight

This interactive PDF works like a website – tap or click a button to jump straight to where you want to go.
You can return here at any time via the navigation bar at the top left.

Exterior lighting
Interior lighting
Windscreen wipers and windscreen washer system
Mirrors

Exterior lighting

Notes on adjusting the lights when driving abroad

It is not necessary to adjust the headlamps. The legal requirements are also met in countries in which traffic drives on the other side of the road.

Information about lighting systems and your responsibility

The various lighting systems of the vehicle are only aids. The driver of the vehicle is responsible for correct vehicle illumination in accordance with the prevailing light and visibility conditions, legal requirements and traffic situation.

Light switch

OPERATING THE LIGHT SWITCH

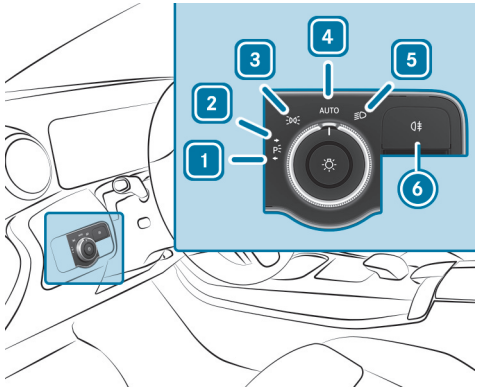

1 Left-hand parking lights
2 Right-hand parking lights
3 Standing lights and licence plate lighting
4 AUTO Automatic driving lights (preferred light switch position)
5 Low beam/high beam
6 Activates or deactivates the rear fog light.

When low beam is activated, the indicator lamp for the standing lights will be deactivated and replaced by the low-beam indicator lamp.

- Always park your vehicle safely using sufficient lighting, in accordance with the relevant legal stipulations.

NOTE
Battery discharging by operating the standing lights

Do not have the standing lights switched on over a period of several hours.

For vehicles that are wider than 2 m or longer than 6 m, single-sided parking lighting is not permitted in some countries. In this case, the standing lights are also switched on in the parking lights position.

If the battery is insufficiently charged, the standing lights or parking lights will be switched off automatically to facilitate the next drive system start.

THE EXTERIOR LIGHTING (EXCEPT STANDING AND PARKING LIGHTS) WILL SWITCH OFF AUTOMATICALLY WHEN THE DRIVER'S DOOR IS OPENED.

- Observe the notes on locator lighting (⟶ page 267).

AUTOMATIC DRIVING LIGHTS FUNCTION
When the vehicle is switched on, the standing lights, low beam and daytime running lights will be switched on automatically depending on the light conditions.

WARNING
Risk of accident when the dipped beam is switched off in poor visibility

When the light switch is set to AUTO, the dipped beam may not be switched on automatically if there is fog, snow or other causes of poor visibility such as spray.

► In such cases, turn the light switch to .

The automatic driving lights are only an aid. You are responsible for the vehicle lighting.

SWITCHING THE REAR FOG LIGHT ON/OFF

Requirements

- The light switch is in the or AUTO position.

► Press button .

Please observe the country-specific laws on the use of rear fog lamps.

Operating the combination switch for the light

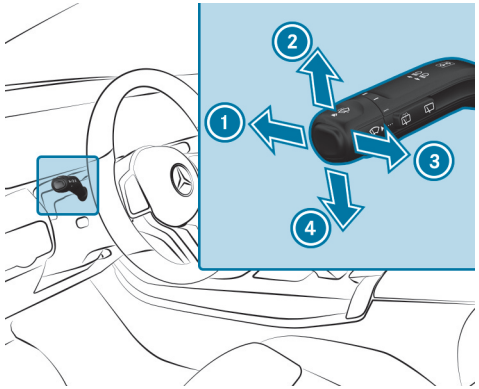

1. Main beam
2. Turn signal light, right
3. Headlamp flashing
4. Turn signal light, left

► Use the combination switch to select the desired function.

SWITCHING ON THE MAIN BEAM

- Turn the light switch to the [≡D] or [AUTO] position.
- Push the combination switch in the direction indicated by the arrow (1).

  When the main beam is activated, the indicator lamp for the low beam [≡D] will be deactivated and replaced by the indicator lamp for the main beam [≡D].

SWITCHING OFF THE MAIN BEAM

- Push the combination switch in the direction indicated by the arrow (1) or pull in the direction indicated by the arrow (3).

HEADLAMP FLASHING

- Pull the combination switch in the direction indicated by the arrow (3).

TURN SIGNAL LIGHT

- **To indicate briefly:** push the combination switch briefly to the pressure point in the direction of arrow (2) or (4).

  The corresponding turn signal light flashes three times.
- **To indicate for a duration:** push the combination switch beyond the pressure point in the direction of arrow (2) or (4).

Activating/deactivating the hazard warning lights

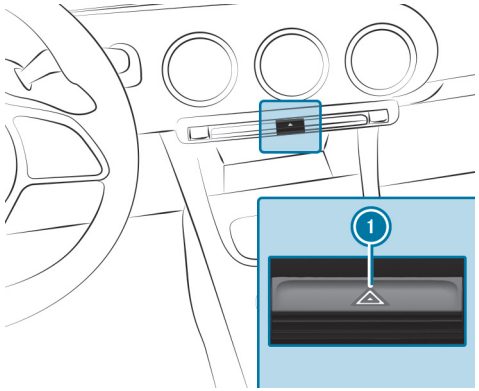

- Press button (1).

IN THE FOLLOWING SITUATIONS, THE HAZARD WARNING LIGHTS WILL SWITCH ON AUTOMATICALLY:

- The airbag has been deployed
- the vehicle brakes are applied heavily from a speed of more than 70 km/h to a standstill.
- An emergency stop has been initiated (⟶ page 373)

When you pull away again, the hazard warning light system will switch off automatically at approximately 10 km/h. You can also switch off the hazard warning light system using button (1).

Adaptive Highbeam Assist

ADAPTIVE HIGHBEAM ASSIST FUNCTION

WARNING
Risk of accident despite Adaptive Highbeam Assist

ADAPTIVE HIGHBEAM ASSIST DOES NOT REACT TO:

- road users without lights, e.g. pedestrians
- road users with poor lighting, e.g. cyclists
- road users whose lighting is obstructed, e.g. by a barrier

On very rare occasions, Adaptive Highbeam Assist may fail to recognise other road users with their own lighting, or may recognise them too late.

In these, or in similar situations, the automatic high beam will not be deactivated or will be activated despite the presence of other road users.

► Always observe the road and traffic conditions carefully and switch off the high beam in good time.

Adaptive Highbeam Assist cannot take into account road, weather or traffic conditions.

DETECTION MAY BE RESTRICTED IN THE FOLLOWING CASES:

- In poor visibility (e.g. fog, heavy rain or snow)
- If there is dirt on the sensors or the sensors are obscured

Adaptive Highbeam Assist serves solely as an aid. The responsibility for correctly adapting the vehicle's lighting to the prevailing light, visibility and traffic conditions lies solely with the driver.

ⓘ Adaptive Highbeam Assist is a Digital Extra (⟶ page 94).

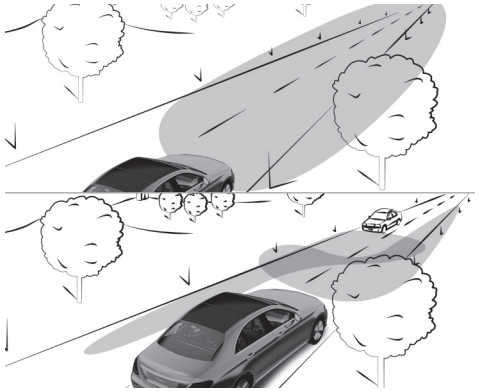

ADAPTIVE HIGHBEAM ASSIST AUTOMATICALLY SWITCHES BETWEEN THE FOLLOWING TYPES OF LIGHT:

- Low beam
- High beam

AT SPEEDS ABOVE 30 KM/H:

- If no other road users are detected, the high beam will switch on automatically.

THE HIGH BEAM WILL SWITCH OFF AUTOMATICALLY IN THE FOLLOWING CASES:

- At speeds below 25 km/h

- If other road users are detected
- If street lighting is adequate

The system's optical sensor is located behind the windscreen near the overhead control panel.

SWITCHING ADAPTIVE HIGHBEAM ASSIST ON/OFF

WARNING
Risk of accident despite Adaptive Highbeam Assist

ADAPTIVE HIGHBEAM ASSIST DOES NOT REACT TO:

- road users without lights, e.g. pedestrians
- road users with poor lighting, e.g. cyclists
- road users whose lighting is obstructed, e.g. by a barrier

On very rare occasions, Adaptive Highbeam Assist may fail to recognise other road users with their own lighting, or may recognise them too late.

In these, or in similar situations, the automatic high beam will not be deactivated or will be activated despite the presence of other road users.

► Always observe the road and traffic conditions carefully and switch off the high beam in good time.

SWITCHING ON

► Turn the light switch to the AUTO position.

► Switch on high beam using the combination switch.

If Adaptive Highbeam Assist is activated, the indicator lamp will light up on the driver's display.

SWITCHING OFF

► Switch off high beam using the combination switch.

Setting the exterior lighting switch-off delay time

Multimedia system:

Settings » Lights » Interior/exterior lighting » Exterior lighting switch-off delay

► Set a switch-off delay time.

After parking and locking the vehicle, the exterior lighting will be activated for the set time.

Activating/deactivating locator lighting

Multimedia system:

Settings » Lights » Interior/exterior lighting

► Activate or deactivate Locator lighting.

The exterior lighting will light up for 40 seconds after the vehicle is unlocked or the driver's door is opened when the vehicle is not locked. When you start the vehicle, the locator lighting will be deactivated and the automatic driving lights activated.

Interior lighting

Adjusting the interior lighting

FRONT OVERHEAD CONTROL PANEL

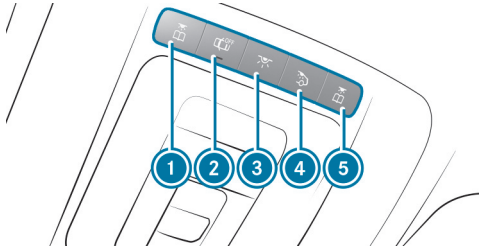

1 Front left reading lamp
2 Automatic interior lighting control
3 Front interior lighting
4 Rear interior lighting
5 Front right reading lamp

► **To switch on or off:** press button 1 – 5 accordingly.

OPERATING UNIT INSIDE THE GRAB HANDLE (REAR)

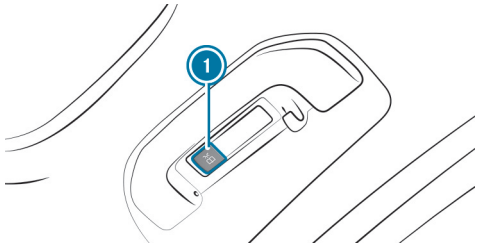

1 Rear reading lamp

► **To switch on or off:** press the 1 button.

Adjusting the ambient lighting

Multimedia system:

Comfort » Ambient light

SETTING THE COLOUR

► Select Colour.

► Select Monochrome or Multi-colour.

► Set the desired colour or colour scheme.

ADJUSTING THE BRIGHTNESS

► Select Brightness.

► Adjust the brightness.

ⓘ Depending on the ambient light conditions, the ambient lighting will automatically switch between day and night mode.

ACTIVATING THE BRIGHTNESS FOR ZONES

► Select Brightness.

► Switch off Link zones .

The Direct, Indirect and Accents zones can be set separately.

ACTIVATING EFFECTS

► Select Effects.

► Activate the desired effect.

ⓘ Different effects will be available depending on the vehicle equipment.

MULTI-COLOUR ANIMATION

- The set colour combination will change at predefined intervals.

CLIMATE

- If changes are made to the temperature setting in the vehicle, the colour of the ambient lighting will change briefly.

GREETING

- When you get into the vehicle, a special colour animation will play.

CHARGING ANIMATION

- The ambient lighting provides visual feedback on the different states of charge when the vehicle is connected to or disconnected from the charging station.

Switching the interior lighting switch-off delay time on/off

Multimedia system:

→ Settings » Lights » Interior/exterior lighting » Interior lighting switch-off delay

► Activate or deactivate Interior lighting switch-off delay.

If this function is active, the interior lighting will be switched on for a short time after the end of the journey.

Windscreen wipers and windscreen washer system

Switching the windscreen wipers on/off

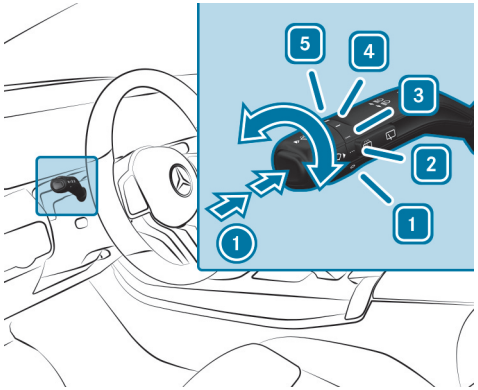

1 0 Windscreen wipers off
2 ••• Automatic wiping, normal
3 •••• Automatic wiping, frequent
4 — Continuous wiping, slow
5 = Continuous wiping, fast

- Turn the combination switch to the corresponding position 1 - 5.
- **Single wipe:** press button (1) as far as the point of resistance.
- **Wiping with washer fluid:** press button (1) beyond the point of resistance.

(i) Observe the notes on washing the vehicle in a car wash (→ page 32).

Switching the rear window wiper on/off

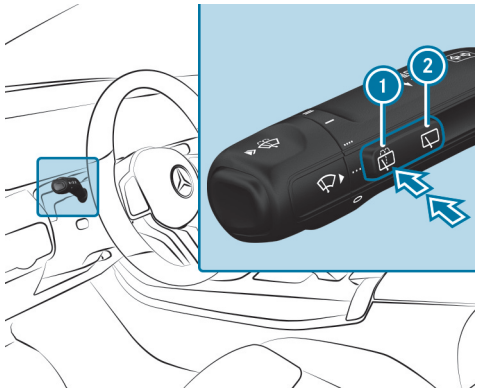

(1) Single wipe/washing
(2) Intermittent wiping

- **Single wipe:** press button (1) as far as the point of resistance.
- **Wiping with washer fluid:** press button (1) beyond the point of resistance.

- **Switching intermittent wiping on/off:** press button (2).

  The [symbol] symbol will appear on the driver's display when the rear window wiper is switched on.

Replacing the windscreen wiper blades

WARNING
Risk of becoming trapped if the windscreen wipers are switched on while wiper blades are being replaced

If the windscreen wipers begin to move while you are changing the wiper blades, you can be trapped by the wiper arm.

- Always switch off the windscreen wipers and vehicle before changing the wiper blades.

MOVING THE WIPER ARMS INTO THE REPLACEMENT POSITION

- Switch the vehicle on and then off again immediately.
- Within around 15 seconds, press and hold the [button] button on the combination switch for approximately three seconds (⟶ page 270).

  The wiper arms will move into the replacement position.

Check the condition of the wiper blades regularly and replace them in the event of visible damage or ongoing smearing.

- Observe the information about the service indicator.

SERVICE INDICATOR

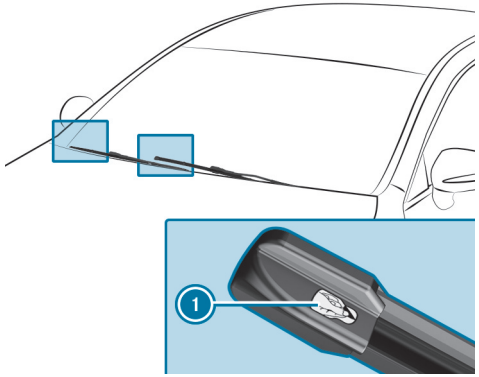

- Remove protective film (1) from the service indicators on the tips of the newly fitted wiper blades.

When the colour of the service indicator changes from black to yellow, replace the wiper blades.

The time it takes for the colour to change will vary depending on the usage conditions.

Replacing the rear window wiper blade

WARNING
Risk of becoming trapped if the windscreen wipers are switched on while wiper blades are being replaced

If the windscreen wipers begin to move while you are changing the wiper blades, you can be trapped by the wiper arm.

- Always switch off the windscreen wipers and vehicle before changing the wiper blades.

REMOVING THE WIPER BLADE

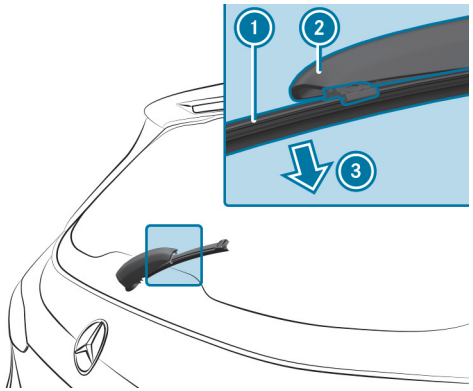

- Switch off the vehicle.
- Fold wiper arm (2) away from the rear window until it engages in the replacement position.
- Unclip wiper blade (1) from wiper arm (2) and remove it in the direction of arrow (3).

FITTING THE WIPER BLADE

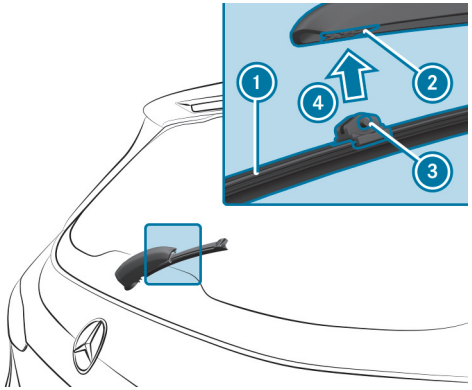

- Position wiper blade (1) with both tabs (3) on holder (2) on the wiper arm.
- Push wiper blade (1) in the direction of arrow (4) until it engages in holder (2).
- Make sure that wiper blade (1) is seated correctly.
- Fold the wiper arm from the replacement position back onto the rear window.

Mirrors

Operating the outside mirrors

WARNING
Risk of injury due to adjusting vehicle settings while the vehicle is in motion

YOU COULD LOSE CONTROL OF THE VEHICLE IN THE FOLLOWING SITUATIONS IN PARTICULAR:

- If you adjust the driver's seat, the head restraints, the steering wheel or the mirror while the vehicle is in motion.
- If you fasten your seat belt while the vehicle is in motion.

► Before starting the drive system: adjust the driver's seat, the head restraints, the steering wheel and the mirror and fasten your seat belt.

WARNING
Risk of accident due to misjudgement of distance when using the outside mirror

The outside mirrors reflect objects on a smaller scale. The objects in view are in fact closer than they appear.

► Therefore, always look over your shoulder in order to ensure that you are aware of the actual distance between you and the road users driving behind you.

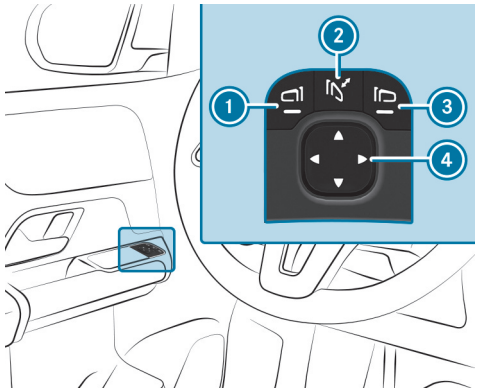

► **To fold in or out:** briefly press button (2).

► **To adjust:** use button (1) or (3) to select the outside mirror to be adjusted.

► Use button (4) to adjust the position of the mirror glass.

ⓘ If the battery has been disconnected or completely discharged, you will have to reset the outside mirrors. Only then will the automatic mirror folding function work properly.

► **To reset:** briefly press button (2).

An outside mirror that has been pushed out of position can be engaged in position again as follows:

► **Vehicles without electrically folding outside mirrors:** manually move the outside mirror into the correct position.

► **Vehicles with electrically folding outside mirrors:** press and hold button (2).

You will hear a click. The outside mirror will now be set to the correct position.

Automatic anti-dazzle mirrors function

⚠ **WARNING**
Risk of acid burns and poisoning due to the anti-dazzle mirror electrolyte

Electrolyte may escape if the glass in an automatic anti-dazzle mirror breaks.

The electrolyte is hazardous to health and causes irritation. It must not come into contact with your skin, eyes, respiratory organs or clothing or be swallowed.

► If you come into contact with electrolyte, observe the following:

- Immediately rinse the electrolyte from your skin with water and seek medical attention.
- If electrolyte comes into contact with your eyes, immediately rinse them thoroughly with clean water and seek medical attention.
- If the electrolyte is swallowed, immediately rinse your mouth out thoroughly. Do not induce vomiting. Seek medical attention immediately.
- Immediately change out of clothing which has been contaminated with electrolyte.
- If an allergic reaction occurs, seek medical attention immediately.

When light from a headlamp hits the sensor on the inside rearview mirror, the inside rearview mirror automatically dims.

SYSTEM LIMITS

THE SYSTEM WILL NOT GO INTO ANTI-DAZZLE MODE IF:

- The drive system is switched off.
- Reverse gear is engaged
- The interior lighting is switched on.

Front-passenger outside mirror parking position function

The parking position makes parking easier.

THE FRONT-PASSENGER OUTSIDE MIRROR WILL SWIVEL DOWNWARDS IN THE DIRECTION OF THE REAR WHEEL ON THE FRONT PASSENGER'S SIDE WHEN:

- the parking position is stored (⟶ page 275).
- the front-passenger mirror is selected.
- reverse gear is engaged.

THE FRONT-PASSENGER OUTSIDE MIRROR WILL MOVE BACK TO ITS ORIGINAL POSITION WHEN:

- you shift the transmission to another transmission position.
- you are travelling at a speed greater than 15 km/h.
- you press the button for the outside mirror on the driver's side.

Storing the parking position of the front-passenger outside mirror using reverse gear

STORING

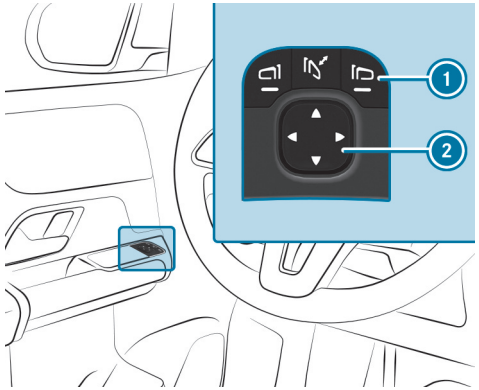

- ► Press button (1) to select the front-passenger outside mirror.
- ► Engage reverse gear.
- ► Move the front-passenger outside mirror into the desired parking position using button (2).

CALLING UP

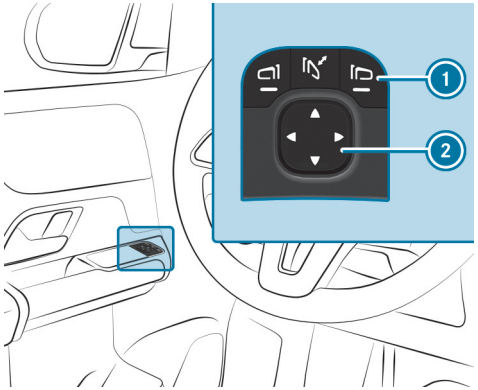

(1) Selects the front-passenger outside mirror
(2) Adjusts the mirrors

- Press button (1) to select the front-passenger outside mirror.
- Engage reverse gear.
  The front-passenger outside mirror will move into the stored parking position.

Activating/deactivating the automatic mirror folding function

Multimedia system:

Settings >> Vehicle >> Open/close

- Activate or deactivate Automatic mirror fold-in.

Back to Contents

Climate control

This interactive PDF works like a website – tap or click a button to jump straight to where you want to go.
You can return here at any time via the navigation bar at the top left.

Overview of climate control systems

Operating the climate control system

Overview of climate control systems

Notes on climate control

For the air-conditioning system, pollution level monitoring and air filtration to function correctly, an interior air filter must always be used. Make sure that the filter is installed correctly. Use filters recommended and approved by Mercedes-Benz. Always have maintenance work carried out at a qualified specialist workshop.

Overview of the air-conditioning control panel

Vehicles with the THERMATIC air conditioning control panel:

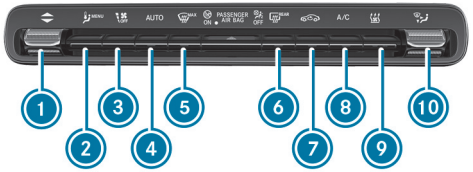

1. ▼▲ Sets the temperature
2. MENU Calls up the air conditioning menu
3. OFF Sets the airflow or switches off climate control
4. AUTO Sets climate control to automatic mode (⟶ page 280)
5. MAX Demists the windscreen
6. REAR Switches the rear window heater on/off
7. Switches air-recirculation mode on/off (⟶ page 282)
8. A/C Switches the A/C function on/off (⟶ page 279)
9. Activates/deactivates "Immediate pre-entry climate control" (⟶ page 285)
10. Sets the air distribution

Vehicles with the THERMOTRONIC air conditioning control panel:

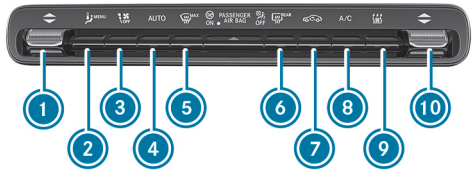

1. ▼▲ Sets the temperature on the driver's side
2. MENU Calls up the air conditioning menu
3. OFF Sets the airflow or switches off climate control
4. AUTO Sets climate control to automatic mode (⟶ page 280)
5. MAX Demists the windscreen
6. REAR Switches the rear window heater on/off
7. Switches air-recirculation mode on/off (⟶ page 282)
8. A/C Switches the A/C function on/off (⟶ page 279)
9. Activates/deactivates "Immediate pre-entry climate control" (⟶ page 285)
10. ▼▲ Sets the temperature on the front passenger side

Operating the climate control system

Switching climate control on/off

- **To switch on:** set the airflow to level 1 or higher using the button.
- **To switch off:** set the airflow to level 0 using the button.

If climate control is switched off, the windows may mist up more quickly. Switch off climate control only briefly.

Switching the A/C function on/off using the air conditioning control panel

The A/C function heats, cools and dehumidifies the vehicle's interior air.

- Press the A/C button.

Switch off the A/C function only briefly; otherwise, the windows may mist up more quickly.

Condensation may drip from the underside of the vehicle when cooling mode is active. This is not indicative of a fault.

Calling up the air conditioning menu via the climate bar or the air conditioning control panel

The air conditioning menu can be called up via the climate bar. The climate bar is always shown on the lower edge of the media display.

- Select the Climate menu entry in the air conditioning bar.

Activating/deactivating the A/C function via the air-conditioning menu

Multimedia system:

Climate menu >> First row of seats

Depending on the external conditions, support for improved cooling and dehumidification of the interior air will be provided when the A/C function is activated. If it is not possible to operate the A/C function on the climate bar on the media display, switch the function on or off in the climate menu of the media display.

- Select A/C (A/C).

Switch off the A/C function only briefly; otherwise, the windows may mist up more quickly.

Condensation may drip from the underside of the vehicle when cooling mode is active. This is not indicative of a fault.

Switching the steering wheel heater on or off via the air conditioning menu

Multimedia system:

Climate menu >> First row of seats

- Select [steering wheel heater].

  The indicator lamp lights up when the steering wheel heater is switched on.

Setting climate control to automatic mode

In automatic mode, the set temperature is controlled and maintained at a constant level by the air supply.

- Press button AUTO.
- **To switch to manual mode:** press the [fan] or AUTO button.

In automatic mode, you can choose between five different air quantities using the [fan OFF] button. Automatic mode is retained.

Selecting climate modes via the air conditioning menu

Multimedia system:

Climate menu

It is possible to switch between different climate modes on the Climate menu via the ECO button.

If ECO or ECO+ mode is activated, certain climate control functions will be restricted to conserve energy and extend the vehicle's range.

THE FOLLOWING MODES ARE AVAILABLE ON THE CLIMATE MENU:

- **Comfort:** maximum climate comfort
- **ECO:** while heating and cooling output are limited, it remains possible to operate climate control without restriction. If you activate [MAX], the system will automatically switch to Comfort mode.
- **ECO+:** mode using only the blower and waste heat, if applicable. The temperature can no longer be adjusted. If you activate [MAX], the system will automatically switch to Comfort mode.

ⓘ The windows may mist up more when ECO or ECO+ mode is activated. If windows mist up, the blower setting should be varied and, if necessary, the Comfort air-conditioning mode should be selected. If necessary, also switch on the "Demist windscreen" function [MAX] (→ page 282).

ⓘ ECO+ climate mode can also be switched on and off via the range maximisation button (⟶ page 301) on the EQ menu under Range. When the range maximisation function is deactivated, the system will automatically switch to the last selected climate mode.

ⓘ If ECO+ mode or range maximisation is activated, the seat heating will automatically be deactivated.

ⓘ If there is a low outside and vehicle interior temperature, the heating output via air will be reduced and the seat heating will automatically be activated to increase the range (⟶ page 222).

ⓘ If the vehicle is parked in ECO or ECO+ mode for a short period, the previously selected mode will still be activated the next time the vehicle is started. If the vehicle is parked in ECO or ECO+ mode for a longer period of time, the system will automatically switch to Comfort mode the next time the vehicle is started.

- ► Tap on ECO.
- ► Select Comfort, ECO or ECO+.

If an ECO mode is selected via the air conditioning control panel, two LEDs will appear below the temperature display. When ECO mode is switched on, one LED will light up green on the temperature display. When ECO+ mode is switched on, both LEDs will light up green and the ECO+ display will appear.

Overview of the air distribution settings

THE SYMBOLS ON THE DISPLAY INDICATE WHICH VENTS THE AIRFLOW IS BEING DIRECTED THROUGH:

- Demister and side air vents
- Centre and side air vents
- Footwell and side air vents
- Centre, side and footwell vents
- Demister, footwell and side air vents
- All vents
- Demister, centre and side air vents
- Automatic air distribution

Setting air distribution using the air conditioning menu

Multimedia system:

→ Climate menu

- ► Select First row of seats or Second row of seats.
- ► To set the air distribution: select , or .
- ► Set the airflow.

When the air conditioning system is switched on, at least one zone is always active. However, several air distribution options can be selected at the same time, for example to set the climate control for the vehicle interior and the footwells simultaneously. The climate control for the windscreen can only be selected for the first seat row. When automatic mode is active, the buttons for setting the air distribution are automatically deactivated. If the air conditioning system is switched off, the buttons can still be operated and the last setting is saved.

Switching the synchronisation function on/off via the air conditioning menu

Multimedia system:

Climate menu >> First row of seats

The synchronisation function controls the climate control centrally. The driver's settings for temperature, airflow and air distribution are automatically adopted for each climate zone.

- Select SYNC (SYNC).

Demisting the windows

WINDOWS MISTED UP ON THE INSIDE

- Press the AUTO button.
- If the windows remain misted up: press the MAX button.

WINDOWS MISTED UP ON THE OUTSIDE

- Switch on the windscreen wipers.
- Press the AUTO button.

Switching air-recirculation mode on/off

- Press the button.
  The interior air is recirculated.

Air-recirculation mode will automatically switch to fresh air mode after a while.

The windows may mist up more quickly with air-recirculation mode switched on. Do not have air-recirculation mode switched on for long periods.

Pre-entry climate control using the key

PRE-ENTRY CLIMATE CONTROL USING THE KEY

Before you get into the vehicle, the driver's side or the whole vehicle interior can be briefly pre-warmed or pre-cooled.

DURING PRE-COOLING, THE FOLLOWING FUNCTIONS WILL BE ACTIVATED AS NEEDED:

- Automatic climate control
- Blower
- Seat ventilation

DURING PRE-HEATING, THE FOLLOWING FUNCTIONS WILL BE ACTIVATED AS NEEDED:

- Automatic climate control
- Blower

- Seat heating
- Steering wheel heater
- Mirror heater
- Rear window heater

SETTING PRE-ENTRY CLIMATE CONTROL VIA THE KEY

Multimedia system:

Climate menu >> Pre-entry climate ctrl

ACTIVATING/DEACTIVATING

► Select ⚙.

► Select Pre-entry climate control via key.

SWITCHING PRE-ENTRY CLIMATE CONTROL VIA THE KEY ON/OFF

Requirements:

- The high-voltage battery is charged sufficiently.
- The function has been activated via the multimedia system.

► **To switch on:** unlock the vehicle.

The climate control functions are activated for up to five minutes for pre-heating and pre-cooling.

Pre-entry climate control via the key cannot be activated more than three times when the vehicle is switched off.

► **To switch off:** push the ❄ button up or down.

THE FOLLOWING FUNCTIONS WILL REMAIN ACTIVE ONCE THE VEHICLE HAS BEEN STARTED:

- Seat heating
- Seat ventilation

Pre-entry climate control for departure time

PRE-ENTRY CLIMATE CONTROL FOR DEPARTURE TIME FUNCTION

⚠ WARNING

Risk of fatal injury due to exposure to extreme heat or cold in the vehicle

If persons, particularly children, are subjected to prolonged exposure to intense heat or cold, there is a risk of severe injury or even death.

► Never leave persons, particularly children, unattended in the vehicle.

The vehicle interior can be air conditioned when the vehicle is parked.

When the vehicle is connected to power supply equipment, priority will be given to charging the high-voltage battery to a specified minimum state of charge.

THE RUNNING TIME OF PRE-ENTRY CLIMATE CONTROL MAY BE REDUCED UNDER THE FOLLOWING CONDITIONS:

- The vehicle is not connected to power supply equipment.
- The high-voltage battery is not charged sufficiently.

With active pre-entry climate control, the state of charge of the high-voltage battery may be reduced, even if the charging cable connector is inserted.

DURING COOLING, THE FOLLOWING FUNCTIONS WILL BE ACTIVATED AS NEEDED:

- Automatic climate control
- Blower

- Seat ventilation

DURING HEATING, THE FOLLOWING FUNCTIONS WILL BE ACTIVATED AS NEEDED:

- Automatic climate control
- Blower
- Seat heating
- Steering wheel heater
- Mirror heater
- Rear window heater

SETTING PRE-ENTRY CLIMATE CONTROL FOR DEPARTURE TIME

Multimedia system:

Climate menu >> Pre-entry climate ctrl

SETTING A SINGLE DEPARTURE TIME

► Select ONCE.

► Set a departure time.

CHANGING THE ACTIVE DEPARTURE TIME

► Select the pen icon next to the displayed departure time.

► Set a departure time.

SETTING THE WEEK PROFILE

► Select WEEK PROFILE.

► Set the desired departure times, e.g. every day at 08:00.

SELECTING THE ZONE

► Select [⚙].

► Select Driver's seat only.

If the Driver's seat only setting is deactivated, pre-entry climate control will be carried out for the entire vehicle.

You can watch an animation on this topic via the following link:

ACTIVATING/DEACTIVATING PRE-ENTRY CLIMATE CONTROL FOR DEPARTURE TIME

> ⚠ **WARNING**
> Risk of fatal injury due to exposure to extreme heat or cold in the vehicle
>
> If persons, particularly children, are subjected to prolonged exposure to intense heat or cold, there is a risk of severe injury or even death.
>
> ► Never leave persons, particularly children, unattended in the vehicle.

Requirements

- The high-voltage battery is charged sufficiently.
- The function has been activated via the multimedia system.

► **To activate:** set the departure time (⟶ page 284).

Pre-entry climate control for departure time will switch on a maximum of 55 minutes before the selected departure time. It will remain active for another ten minutes if the departure is delayed.

► **To deactivate:** press the [❄] button up or down.

THE FOLLOWING FUNCTIONS WILL REMAIN ACTIVE ONCE THE VEHICLE HAS BEEN STARTED:

- Seat heating
- Seat ventilation

ⓘ You can also activate the function via the Mercedes me App.

Activating/deactivating immediate pre-entry climate control

⚠ **WARNING**
Risk of fatal injury due to exposure to extreme heat or cold in the vehicle

If persons, particularly children, are subjected to prolonged exposure to intense heat or cold, there is a risk of severe injury or even death.

► Never leave persons, particularly children, unattended in the vehicle.

Air-conditioning of the vehicle interior can continue for up to 30 minutes, e.g. if the journey is interrupted.

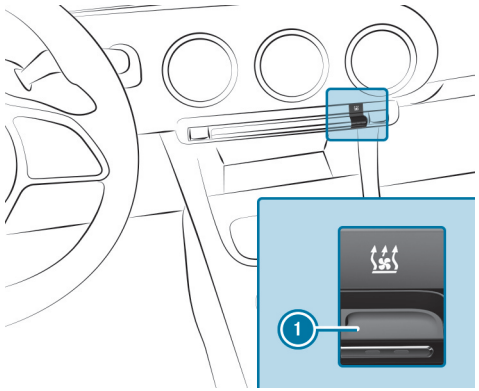

THE COLOURS OF THE INDICATOR LAMP ON BUTTON 1 HAVE THE FOLLOWING MEANINGS:

- **Blue:** cooling is activated.
- **Red:** heating is activated.
- **Yellow:** the departure time has been preselected.

► Set the desired temperature using the ▼▲ button.

► Press button 1.
The red or blue indicator lamp on button 1 will light up or go out.

ⓘ You can also activate the function via the Mercedes me App.

Air vents

ADJUSTING THE FRONT AIR VENTS

WARNING
Risk of burns or frostbite due to being too close to the air vents

Very hot or very cold air can flow from the air vents.

- Make sure that all vehicle occupants always maintain a sufficient distance from the air vents.
- If necessary, direct the airflow to another area of the vehicle interior.

TO GUARANTEE THE FLOW OF FRESH AIR THROUGH THE AIR VENTS INTO THE VEHICLE INTERIOR, NOTE THE FOLLOWING:

- Always keep the vents and ventilation grilles in the vehicle interior clear.
- Keep the air inlet free of residue build-up (⟶ page 611).

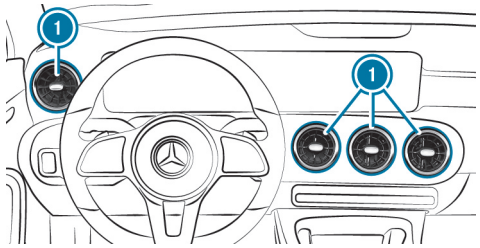

- **To open or close:** hold the centre of air vent (1) and turn it to the left (open) or right (closed) as far as it will go.
- **To set the airflow direction:** hold the centre of air vent (1) and move it up or down or to the left or right.

ADJUSTING THE REAR AIR VENTS

WARNING
Risk of burns or frostbite due to being too close to the air vents

Very hot or very cold air can flow from the air vents.

- Make sure that all vehicle occupants always maintain a sufficient distance from the air vents.
- If necessary, direct the airflow to another area of the vehicle interior.

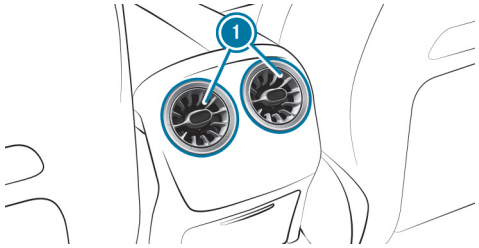

- **To open or close:** hold the centre of air vent (1) and turn it to the left or right as far as it will go.
- **To set the airflow direction:** hold the centre of air vent (1) and move it up or down or to the left or right.

Driving and parking

This interactive PDF works like a website – tap or click a button to jump straight to where you want to go.
You can return here at any time via the navigation bar at the top left.

Driving
DYNAMIC SELECT
Transmission
Function of 4MATIC
Charging the high-voltage battery
Parking
Driving and driving safety systems
Trailer hitch
Bicycle rack function
Vehicle towing instructions

Driving

Notes on electric driving

WARNING
Risk of chemical burns and poisoning from damaged high-voltage battery

If the housing of the high-voltage battery has been damaged, electrolyte and gases may leak out.

- ► Avoid contact with the skin, eyes or clothing.
- ► Immediately rinse electrolyte splashes off with water and seek medical attention straight away.

DANGER
Risk of fire and explosion from excessive internal pressure of the high-voltage battery

In the event of a vehicle fire, flammable gas can escape and ignite.

- ► Stop the charging process immediately in case of unusual odours, smoke or burn marks.
- ► Leave the danger zone immediately. Secure the danger zone at a sufficient distance.
- ► Call the fire service.

OBSERVE THE FOLLOWING NOTES ON VEHICLE NOISE EMISSIONS AND THE ACOUSTIC VEHICLE ALERTING SYSTEM:

- The vehicle is equipped with an all-electric drive system and produces considerably lower vehicle noise emissions than a vehicle with a combustion engine.

  It is for this reason that the vehicle is equipped with a sound generator, which serves as an acoustic vehicle alerting system (AVAS). This safety system is prescribed by law.

  The external noise produced by the sound generator can be heard in the vehicle interior at low speeds and does not constitute a malfunction.
- The sound generator will produce speed-dependent driving noises when the vehicle is driving forwards or reversing up to a speed of approximately 30 km/h.

  This will help other road users, particularly pedestrians and cyclists, to hear your vehicle better.
- From a speed of 20 km/h, the acoustic vehicle alerting system will gradually switch off.
- Despite the sound generator, the vehicle still may not be heard by other road users. Adapt your driving style accordingly.
- The sound generator will be off when the vehicle is stationary.

Manually disconnecting the high-voltage on-board electrical system

DANGER
Risk of death and fire due to modified and/or damaged components of the high-voltage on-board electrical system

The vehicle's high-voltage on-board electrical system is under high voltage. If you modify component parts in the vehicle's high-voltage on-board electrical system or touch damaged component parts, you may be electrocuted. In addition, modified and/or damaged components may cause a fire.

In the event of an accident or impact to the underbody, components of the high-voltage on-board electrical system may be damaged although the damage is not visible.

- ► Never make any modifications to the high-voltage on-board electrical system.
- ► Do not switch on or use the vehicle if its high-voltage on-board electrical system components have been modified or damaged.
- ► Never touch damaged components of the high-voltage on-board electrical system.
- ► After an accident, do not touch any components of the high-voltage on-board electrical system.
- ► After an accident, have the vehicle transported away.
- ► Have the components of the high-voltage on-board electrical system checked at a qualified specialist workshop and replaced if necessary.

Requirements:

ONLY DISCONNECT THE HIGH-VOLTAGE ON-BOARD ELECTRICAL SYSTEM MANUALLY IN THE FOLLOWING SITUATIONS:

- The restraint system warning lamp lights up on the driver display, e.g. after an accident.
- The vehicle is badly damaged, e.g. after an accident, and restraint system components have not been triggered.

OPERATING THE HIGH-VOLTAGE DISCONNECT DEVICE
Only disconnect the high-voltage on-board electrical system manually in the above-mentioned situations.

- ► Switch off the vehicle.
- ► Shift the transmission to position P.
- ► Apply the electric parking brake.
- ► Secure the vehicle against rolling away.
- ► Open the bonnet (⟶ page 607).

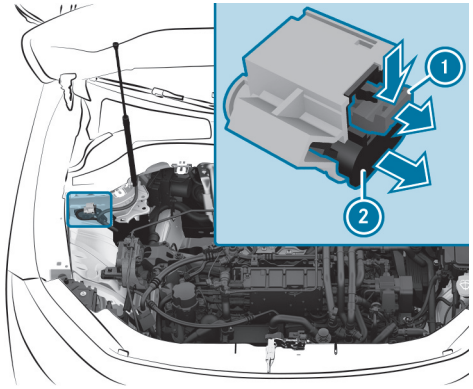

- ► Press release tab (1) in the direction of the arrow and pull it out.
- ► Pull high-voltage disconnect device (2) in the direction of the arrow until it engages.

  The high-voltage on-board electrical system is switched off.

All work on the drive system (including after disconnecting the high-voltage on-board electrical system manually) may only be carried out at a qualified specialist workshop.

Switching on the power supply or the vehicle

WARNING
Accident- and risk of injury with unsupervised children in the vehicle

IF YOU LEAVE CHILDREN UNATTENDED IN THE VEHICLE, THEY CAN IN PARTICULAR

- Open doors and thereby endanger other persons or road users.
- get out of the car and are hit by traffic.
- Operate vehicle equipment and become trapped, forexample.

IN ADDITION, THE CHILDREN COULD ALSO SET THE VEHICLE IN MOTION, FOR EXAMPLEBY:

- releasing the parking brake.
- change the gearbox setting.
- start the vehicle.

- ► Never leave children unattended in the vehicle.
- ► When leaving the vehicle, always take the SmartKey with you and lock the vehicle.
- ► Keep the key out of reach of children.

Requirements:

- The key is in the vehicle and is recognised.
- The brake pedal is not depressed.

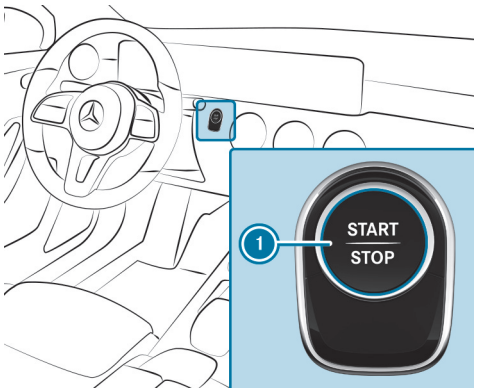

► **To switch on the power supply:** press button (1) once.

You can, for example, switch on the windscreen wipers.

THE POWER SUPPLY WILL BE SWITCHED OFF AGAIN IF THE FOLLOWING CONDITIONS ARE MET:

- You open the driver's door.
- You press button (1) twice more.

► **To switch on the vehicle:** press button (1) twice.

Indicator and warning lamps will light up on the driver display.

THE VEHICLE WILL BE SWITCHED OFF AGAIN IF ONE OF THE FOLLOWING CONDITIONS IS MET:

- You do not start the vehicle within 15 minutes and the transmission is in position P or the electric parking brake is applied.
- You press button (1) once.

Starting the vehicle with the start/stop button

WARNING
Accident- and risk of injury with unsupervised children in the vehicle

IF YOU LEAVE CHILDREN UNATTENDED IN THE VEHICLE, THEY CAN IN PARTICULAR

- Open doors and thereby endanger other persons or road users.
- get out of the car and are hit by traffic.
- Operate vehicle equipment and become trapped, forexample.

IN ADDITION, THE CHILDREN COULD ALSO SET THE VEHICLE IN MOTION, FOR EXAMPLEBY:

- releasing the parking brake.
- change the gearbox setting.
- start the vehicle.

► Never leave children unattended in the vehicle.

► When leaving the vehicle, always take the SmartKey with you and lock the vehicle.

► Keep the key out of reach of children.

Requirements:

- The key is in the vehicle and is recognised.

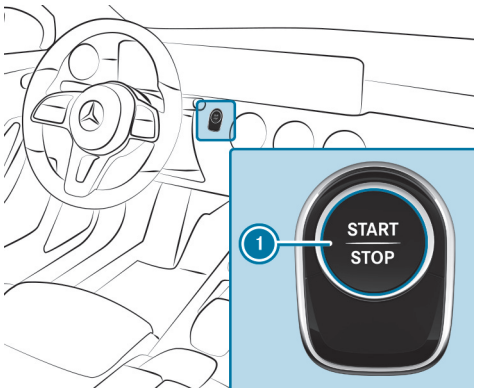

- Shift the transmission to position P or N.
- Depress the brake pedal and press the button 1 once.
  - The vehicle is started.
  - The READY indicator appears on the driver display: the vehicle is ready to drive.
- If the vehicle does not start, switch off unnecessary consumers and press the button 1 once.
- If the vehicle still does not start and the Place the key in the marked space See Owner's Manual display message appears on the driver display, start the vehicle with the key in the storage compartment (emergency operation mode) (⟶ page 293).

ⓘ You can switch off the vehicle while driving. Switch off the vehicle by pressing and holding the button 1 for about three seconds or pressing the button 1 three times within three seconds. The transmission will shift to neutral N automatically. When you press the button 1 again, the vehicle will start again and you can engage the drive position D again. Be sure to observe the safety notes concerning this under "Driving tips" (⟶ page 294).

Observe any information regarding display messages that may be shown on the driver display.

Starting the vehicle in emergency operation mode

WARNING
Accident- and risk of injury with unsupervised children in the vehicle

IF YOU LEAVE CHILDREN UNATTENDED IN THE VEHICLE, THEY CAN IN PARTICULAR

- Open doors and thereby endanger other persons or road users.
- get out of the car and are hit by traffic.
- Operate vehicle equipment and become trapped, forexample.

IN ADDITION, THE CHILDREN COULD ALSO SET THE VEHICLE IN MOTION, FOR EXAMPLEBY:

- releasing the parking brake.
- change the gearbox setting.
- start the vehicle.

► Never leave children unattended in the vehicle.

► When leaving the vehicle, always take the SmartKey with you and lock the vehicle.

► Keep the key out of reach of children.

START THE VEHICLE WITH THE KEY IN THE MARKED SPACE.
If the vehicle does not start and the Place the key in the marked space See Owner's Manual display message appears on the driver display, you can start the vehicle in emergency operation mode.

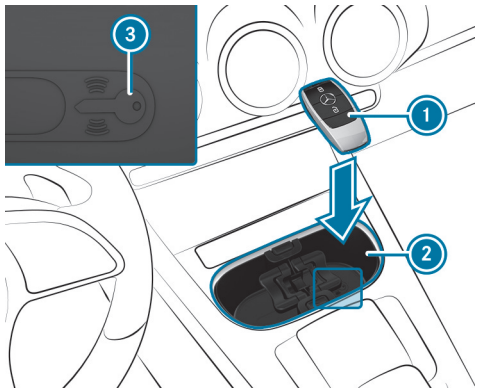

Storage compartment (example with cup holder without roller cover)

► Open the roller cover of the storage compartment (2) if necessary.

► Ensure that the storage compartment (2) is empty.

► Remove the key (1) from the key ring.

► Place the key (1) on the symbol (3) in the storage compartment (2).
The vehicle will start after a short delay.
If you remove the key (1) from the storage compartment (2), the vehicle will still be ready to drive. For further vehicle starts, however, the key (1) must be located on the symbol (3) in the storage compartment (2) during the entire journey.

► Have the key (1) checked at a qualified specialist workshop.

IF THE VEHICLE DOES NOT START:

► Place the key (1) in the storage compartment (2) and leave it there.

► Depress the brake pedal and start the vehicle using the start/stop button.

ⓘ You can also switch on the power supply or the vehicle independently with the start/stop button (⟶ page 290).

Observe any information regarding display messages that may be shown on the driver display.

Running-in notes

- In certain handling and driving safety systems, the sensors adjust automatically while a certain distance is being driven after the vehicle has been delivered or after repairs. Full system effectiveness is only reached when this teaching-in process has concluded.
- Brake pads, brake disks and tyres that are either new or have been replaced only achieve optimum braking effect and grip after driving several hundred kilometres. Compensate for the reduced braking effect by applying greater force to the brake pedal.

Notes on driving

⚠ **WARNING**
Risk of accident due to objects in the driver's footwell

Objects in the driver's footwell may impede pedal travel or block a depressed pedal.

This will jeopardise the operating and road safety of the vehicle.

► Stow all objects in the vehicle securely so that they cannot get into the driver's footwell.

► Make sure that there is always sufficient clearance for the pedals.

► Always fit the floor mats securely and as prescribed.

► Do not use loose floor mats and do not place floor mats on top of one another.

WARNING
Risk of accident due to incorrect footwear

INCORRECT FOOTWEAR INCLUDES, FOR EXAMPLE:

- shoes with platform soles
- shoes with high heels
- slippers

There is a risk of an accident.

► Always wear suitable footwear so that you can operate the pedals safely.

WARNING
Risk of accident if the vehicle is switched off while driving

If you switch off the vehicle while driving, safety functions are restricted or no longer available.

This may affect the power steering system and the brake force boosting, for example.

You will need to use considerably more force to steer and brake, for example.

► Do not switch off the vehicle while driving.

WARNING
Risk of accident due to the brake system overheating

If you leave your foot on the brake pedal when driving, the brake system may overheat.

This increases the braking distance and the brake system can even fail.

► Never use the brake pedal as a footrest.

► Do not depress the brake pedal and the accelerator pedal at the same time while driving.

NOTE
Reduced battery life due to frequent short-distance trips

The 12 V battery may not be sufficiently charged when the vehicle is used only for short-distance trips. This reduces the life of the battery.

► Drive longer distances regularly to charge the battery.

NOTE
Vehicle damage due to failure to observe the maximum permissible clearance height

If the vehicle height exceeds the maximum permissible clearance height, the roof and other vehicle parts may be damaged.

- ► Please observe the indicated maximum clearance height.
- ► If the vehicle exceeds the permissible clearance height, do not drive in.
- ► Take the modified vehicle height in the case of roof superstructures or other carrier systems into account.

Please bear in mind that all speed values stated in this Owner's Manual are approximate values and are subject to a certain tolerance.

NOTES ON DRIVING WITH A ROOF LOAD, TRAILER OR FULLY LADEN VEHICLE
Driving with a loaded roof luggage rack or trailer, or with the vehicle fully laden or occupied, changes the handling and steering characteristics of your vehicle.

THEREFORE PLEASE OBSERVE THE FOLLOWING NOTES:

- Do not exceed the permissible roof load and trailer load. Also observe the information in the technical data in this respect.
- Distribute the roof load and vehicle load evenly, and place heavy objects at the bottom. Also observe the notes on loading the vehicle (⟶ page 232).
- Drive with care. Avoid sudden starting, braking and steering manoeuvres or fast cornering.
- If trailer operation is permitted, observe the notes on trailer operation (⟶ page 412).

NOTES ON DRIVING ON ROADS TREATED WITH DE-ICING SALT
The braking effect is limited on road surfaces treated with de-icing salt.

PLEASE THEREFORE BEAR IN MIND THE FOLLOWING NOTES:

- Due to salt build-up on the brake discs and brake linings, the braking distance can increase considerably or braking may be one-sided.
- Maintain a much greater safety distance to the vehicle travelling ahead.

REMOVE SALT BUILD-UP AS FOLLOWS:

- Brake occasionally, paying attention to the traffic conditions.
- Carefully depress the brake pedal at the end of the journey and when starting the next journey.

NOTES ON AQUAPLANING
Aquaplaning can take place if a certain depth of water has built up on the road surface.

OBSERVE THE FOLLOWING NOTES DURING HEAVY PRECIPITATION OR IN CONDITIONS IN WHICH AQUAPLANING MAY OCCUR:

- Reduce speed.
- Avoid tyre ruts.
- Avoid sudden steering movements.
- Brake carefully.

ⓘ Also observe the notes on regularly checking wheels and tyres (⟶ page 34).

NOTES ON DRIVING THROUGH WATER ON THE ROAD
Water ingress can damage the drive system, electrics and transmission.

OBSERVE THE FOLLOWING IF YOU NEED TO DRIVE THROUGH WATER:

- The water, when calm, should reach no higher than the lower edge of the vehicle body.
- Drive at a walking pace at most, otherwise water may enter the vehicle.
- Vehicles travelling ahead, or oncoming vehicles, can create waves which may exceed the maximum permissible depth of water.

The service brakes have a reduced braking effect after driving through water. The regenerative brake system is not adversely affected. Brake carefully with the service brake, paying attention to the traffic conditions, until the braking effect has been fully restored.

NOTES ON LONG DOWNHILL STRETCHES
If you keep the brake pedal continuously depressed when negotiating a long downhill stretch, you will cause excessive brake wear and the brake system may overheat.

PLEASE THEREFORE BEAR IN MIND THE FOLLOWING NOTES:

- When negotiating downhill gradients, use the braking effect of the regenerative brake system. Set the recuperation level to D − (⟶ page 298).
- Please note that if the high-voltage battery is cold or has a high state of charge, the braking effect of the regenerative brake system is reduced or completely absent.
- Charge the high-voltage battery to a maximum of 80 % before making long descents.

ECO display function

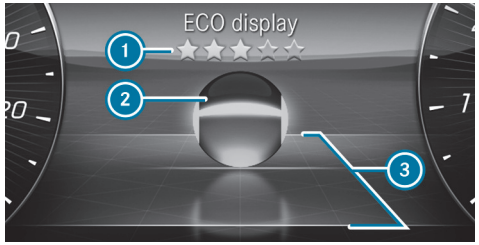

The ECO display shows an evaluation of your driving style on the driver's display depending on the situation. This enables you to check the efficiency of your driving style and adjust it if necessary. The ECO display menu shows a ball (2) that will roll forwards or backwards in the direction of travel on a stylised road according to the driving characteristics.

Above and below the road, lines mark the area for an efficient driving style (3). Ball (2) will light up in green if it is rolling within these lines. Outside the lines, the ball will light up in orange.

THE ECO DISPLAY ASSESSES THE FOLLOWING CRITERIA FOR AN ECONOMICAL DRIVING STYLE:

- Coasting at the right times
- consistent speed
- moderate acceleration

The overall assessment of your driving style "from start" is indicated using stars (1). It starts with five empty stars, which you can fill one after the other

if you drive efficiently. When all five stars are filled, a glow will appear in the background.

ⓘ You can call up the ECO display function via the Classic menu (⟶ page 428).

Recuperative brake system

FUNCTION OF THE REGENERATIVE BRAKE SYSTEM

The regenerative brake system converts the vehicle's kinetic energy into electrical energy during overrun mode and braking.

Depending on the selected recuperation level, the electric motors are operated as an alternator when in overrun mode and during braking in order to charge the high-voltage battery while driving. As soon as you take your foot off the accelerator pedal while driving in transmission position D or R, recuperation starts in overrun mode.

The higher the recuperation, the more sharply the vehicle is braked when coasting and the more electrical energy is fed into the high-voltage battery.

The deceleration in overrun mode may not be sufficient depending on the driving situation. There is no deceleration to a standstill. Also brake with the service brake if necessary. Always adapt your speed to the driving situation and keep sufficient distance.

ⓘ If you brake heavily, the mechanical brake is also used. This means that the maximum recuperation energy cannot be recovered. The more proactively you accelerate and brake, the more efficiently energy can be recuperated.

SYSTEM LIMITS

WITH RECUPERATION IN OVERRUN MODE, THE BRAKING EFFECT OF THE ELECTRIC MOTOR IS ONLY REDUCED OR NON-EXISTENT IN THE FOLLOWING SITUATIONS:

- when the high-voltage battery state of charge increases
- if the high-voltage battery is not yet at a normal operating temperature

ⓘ Be mindful of the system limits, especially before long downhill stretches where the braking effect of the regenerative brake system is to be used (⟶ page 294).

You can watch an animation on this topic via the following link:

MANUALLY SETTING REGENERATIVE DECELERATION

In transmission position D, you can use the steering wheel shift paddles to manually adjust the intensity of the recuperation in overrun mode.

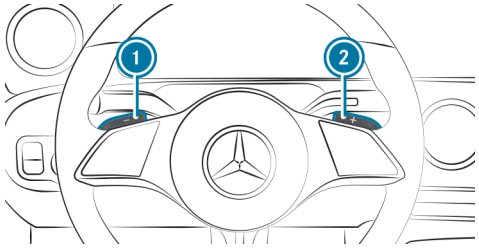

THE FOLLOWING RECUPERATION LEVELS ARE AVAILABLE:

- D AUTO Intelligent, anticipatory recuperation with ECO Assist (⟶ page 299)
- D + Low recuperation
- D Normal recuperation

- D – Increased recuperation: increased deceleration in overrun mode

► Select transmission position D.

► **Increase recuperation:** Pull shift paddle (1) briefly.

► **Reduce recuperation:** Pull shift paddle (2) briefly.

► Select D AUTO **:** Pull shift paddle (1) or (2).

When changing to transmission position R, the current recuperation level is adopted with the exception of D AUTO. If D AUTO was previously selected, the vehicle deceleration of the recuperation level D is set in transmission position R. With a subsequent change to transmission position D, the previously selected variable recuperation D AUTO is set again.

AFTER RESTARTING THE VEHICLE, THE FOLLOWING RECUPERATION LEVEL IS SET:

- D AUTO: If D AUTO was previously selected.
- D: If a recuperation level other than D AUTO was previously selected.

The driver display shows the currently set recuperation level next to the transmission position display.

ECO Assist

ECO ASSIST FUNCTION

ECO Assist is only an aid. It is not a substitute for you paying attention to your surroundings and does not relieve you of your responsibility pertaining to road traffic law. The driver is responsible for keeping a safe distance from the vehicle in front, for vehicle speed and for braking in good time.

WARNING
Risk of accident if ECO Assist does not provide sufficient deceleration

ECO Assist only brakes your vehicle when you take your foot off the gas pedal. If vehicles are detected late, e.g. after tight curves, or if you do not react immediately to the ECO Assist display, the deceleration may not be sufficient.

► React promptly to the ECO Assist recommendation and take your foot off the gas pedal.

► Adjust your speed to the driving conditions and maintain a suitable distance from the vehicle in front.

► Brake the vehicle yourself and/or take evasive action.

ECO Assist is active only in D AUTO (⟶ page 298).

Depending on the vehicle's equipment, ECO Assist analyses data for the vehicle's expected route. This allows the system to optimally adjust the driving style for the route ahead, use minimal energy and recuperate as much as possible. If the system has detected an event ahead or a vehicle in front and the vehicle is approaching the event, ECO Assist will calculate an optimised speed profile based on the distance, speed and available route information.

If you release the accelerator pedal in this case, intelligent recuperation will start in overrun mode. The deceleration in overrun mode may not be sufficient depending on the driving situation. The vehicle will not be decelerated to a standstill. Also brake with the service brake if necessary. Always adapt your

speed to the driving situation and keep sufficient distance. This will be the case particularly if, for example, the detected vehicle ahead stops in front of you or you pull away again in slow-moving traffic and the distance to the vehicle in front is very short.

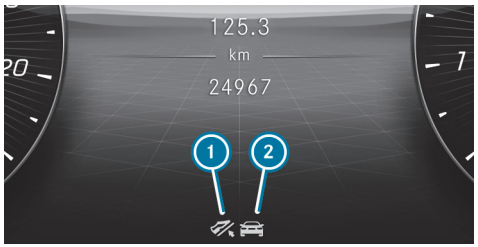

(1) "Foot off the accelerator" recommendation
(2) Route event ahead

ECO Assist can also be shown on the head-up display.

If a route event that requires an adjustment of your driving style is detected ahead, corresponding symbol (2) and the symbol (grey) will be displayed.

If you release the accelerator pedal, the symbol will turn green and recuperation in overrun mode will be initiated. If the deceleration is not sufficient, also apply the service brake.

If ECO Assist intervenes for a route event ahead and you press the accelerator pedal, you will end control by ECO Assist. This does not apply in the case of a vehicle in front.

THE ECO ASSIST DISPLAY WILL BE HIDDEN AGAIN IN THE FOLLOWING CASES:

- You do not react to the ECO Assist recommendation for a long time.
- You depress the accelerator pedal while ECO Assist is intervening because of a route event ahead. This does not apply in the case of a vehicle in front.
- ECO Assist cannot identify any further recommendations from the route ahead.

IN ADDITION TO A VEHICLE IN FRONT , ECO ASSIST CAN DETECT THE FOLLOWING ROUTE EVENTS (2) DEPENDING ON THE VEHICLE'S EQUIPMENT:

- Roundabout
- Sharp bend
- Junction
- T-junction
- Downhill gradient
- Speed limit

To enable ECO Assist to react to future route events, the equipment-dependent speed adaptation functions of Active Distance Assist must be active (→ page 370).

SYSTEM LIMITS
If the calculated route is adhered to when route guidance is active, ECO Assist will operate with greater accuracy. The basic function is also available when route guidance is not active. Not all information and traffic situations can be foreseen. The quality depends on the map data.

ECO Assist will be available after you drive off, as soon as the sensor check is completed.

THE SYSTEM MAY BE IMPAIRED OR MAY NOT FUNCTION IN THE FOLLOWING SITUATIONS:

- if there is poor visibility, e.g. owing to insufficient road illumination, highly variable shadows, rain, snow, fog or heavy spray
- if there is glare, e.g. from oncoming traffic, direct sunlight or reflections
- if the windscreen is dirty in the vicinity of the multifunction camera
- if the multifunction camera is misted up, damaged or obscured
- if road signs are hard to detect, e.g. due to dirt, snow or insufficient lighting, or because they are obscured
- if the digital road map of the navigation system has incorrect or outdated information
- if signs are ambiguous, e.g. road signs in roadworks or in adjacent lanes
- if the radar sensors are dirty or obscured
- when you drive on roads with steep gradients
- if there are narrow vehicles in front, such as bicycles or motorcycles

You can watch an animation on this topic via the following link:

Range maximisation

RANGE MAXIMISATION FUNCTION

The range maximisation function enables a maximum range gain. To achieve this, the function partially or completely switches off convenience systems that are not relevant to driving and activates efficiency-enhancing driving functions.

THE RANGE MAXIMISATION FUNCTION CONTROLS THE RESTRICTIONS OF THE FOLLOWING FUNCTION GROUPS:

- **Climate control**
  - Deactivating the active climate control function. Switching to ECO+ climate mode. Using only the blower and, if necessary, waste heat utilisation (⟶ page 280).

    Deactivating rear window and mirror heaters. The windows may mist up more
- **Interior**
  - Switching off ambient lighting, displays and certain charging functions
- **Seating comfort**
  - Deactivating the steering wheel heater and seat heating
- **ECO drive functions**
  - Changing to the [E] drive program

If necessary, you can deactivate the restrictions of individual function groups again. This will reduce the maximum range gain by the value specified for the function group.

If you switch on a deactivated function while range maximisation is activated, all restrictions of the corresponding function group are removed, and the maximum range gain is reduced accordingly. If you switch on the seat heating again, for example, all restrictions on the "Seating comfort" function group are deactivated.

The specified range gain for the ECO drive functions can be achieved only if you drive in an energy-efficient way and without kickdown in drive program [E].

ACTIVATING/DEACTIVATING RANGE MAXIMISATION

Multimedia system:

Settings » EQ » Range

- Activate or deactivate Maximum range.

  All function groups concerned will be activated or deactivated.

or

- Individually activate or deactivate the individual subsystems of the four Climate control, Interior, Seat comfort and ECO drive functions function groups.

DYNAMIC SELECT

Function of DYNAMIC SELECT

DYNAMIC SELECT allows a drive program to be selected quickly according to the current driving conditions or the desired vehicle characteristics.

THE FOLLOWING VEHICLE CHARACTERISTICS WILL CHANGE ACCORDING TO THE DRIVE PROGRAM SELECTED:

- Drive
- **Vehicles with adaptive damping adjustment:** suspension
- Steering
- ESP®

AVAILABLE DRIVE PROGRAMS

I+ INDIVIDUAL

- Individual settings for the following vehicle characteristics (⟶ page 304):
  - Drive
  - Suspension
  - Steering
  - ESP®

S SPORT

- Maximum power availability
- Emphasis on stability, but with a sporty, dynamic setup
- Suitable only for good road conditions, a dry surface and a clear stretch of road

C COMFORT

- Comfortable driving style
- Balance between traction and stability
- Recommended for all road conditions
- Optimum balance of efficiency and performance for all driving situations

E ECO

- Economical setting of vehicle functions
- Balance between traction and stability
- Recommended for all road conditions
- Limitation of maximum speed to 130 km/h

  If you depress the accelerator pedal beyond the point of resistance (kickdown), the limitation of maximum speed will be deactivated.
- **Navigation with Electric Intelligence:** When the Schedule charging stops route option is switched on and route guidance is active, the maximum speed recommended by the active range monitor will be displayed on the speedometer (⟶ page 430). Compliance in this regard is the sole responsibility of the driver in order to reach the next scheduled charging station.

The ESP® settings in the drive programs [E] and [C] are configured for stability. Therefore, choose one of these drive programs in particular when transporting roof loads, in trailer operation and when the vehicle is fully laden or fully occupied.

Notes on the roof load display

Certain drive programs and ESP® settings are unsuitable for transporting a roof load.

If one of these drive programs is set or selected, the [symbol] symbol is shown as a warning. When this symbol is shown, the selected drive program is not suitable for transporting a load on the roof.

THE FOLLOWING DRIVE PROGRAMS ARE AFFECTED:

- Drive program [S] Sport
- Drive program [I*] Individual with the ESP® setting Sport

Selecting a drive program

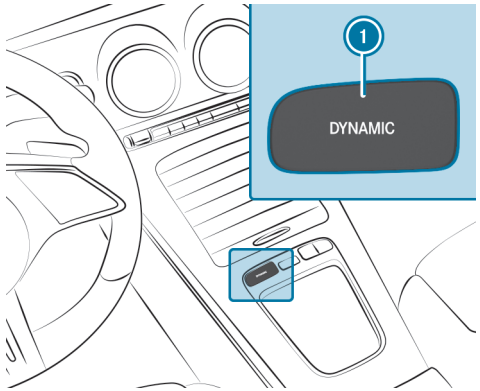

- Press DYNAMIC SELECT button (1) repeatedly until the selected drive program appears on the driver display.

or

- Press DYNAMIC SELECT button (1) and select the drive program on the DYNAMIC SELECT menu on the central display.

Configuring DYNAMIC SELECT in the multimedia system

Multimedia system:

[home] >> Settings >> Vehicle >> DYNAMIC SELECT

SETTING THE I DRIVE PROGRAM

- Select [I*] Individual.
- Select and set a category.

> A sporty ESP mode can be set in conjunction with a sporty suspension mode.

SETTING DRIVE PROGRAM C

- Select Comfort.
- Select Route-based or Standard.

  If route guidance is active and the Route-based option has been switched on, the electrical energy is distributed intelligently in both urban and non-urban areas over the entire route.

With the Standard option, the vehicle drives in its standard drive program (C Comfort). There is no distribution of electrical energy over the entire route. The high-voltage battery is exhausted.

SWITCHING THE RESET DISPLAY ON/OFF

- Activate or deactivate Ask when starting.

> This function must be activated for each user profile separately. The drive program for the respective user profile of the last driver is only stored if this function is activated.

Function on: the next time the vehicle is started a prompt appears asking whether the last active drive program should be restored.

> The prompt appears only if the previously active settings deviate from the standard settings.

Function off: the next time the vehicle is started the C Comfort drive program is set automatically.

Displaying vehicle data

Multimedia system:

→ ⌂ ▶▶ Info

- Select Vehicle.

  The vehicle data is displayed.

Calling up the fuel consumption indicator

Multimedia system:

→ ⌂ ▶▶ EQ

- Select Consumption.

  The current and average fuel consumption will be displayed.

Transmission

DIRECT SELECT lever

FUNCTION OF THE DIRECT SELECT LEVER

WARNING
Accident- and risk of injury with unsupervised children in the vehicle

IF YOU LEAVE CHILDREN UNATTENDED IN THE VEHICLE, THEY CAN IN PARTICULAR

- Open doors and thereby endanger other persons or road users.
- get out of the car and are hit by traffic.
- Operate vehicle equipment and become trapped, forexample.

IN ADDITION, THE CHILDREN COULD ALSO SET THE VEHICLE IN MOTION, FOR EXAMPLEBY:

- releasing the parking brake.
- change the gearbox setting.
- start the vehicle.

► Never leave children unattended in the vehicle.

► When leaving the vehicle, always take the SmartKey with you and lock the vehicle.

► Keep the key out of reach of children.

WARNING
Risk of accident and injury when the transmission position is not engaged

The current transmission position will be highlighted on the driver's display.

If the selected transmission position is not highlighted, the vehicle may pull away in the wrong direction or roll away.

- ► After changing the transmission position, always check the transmission position display on the driver's display.

If the transmission position is not highlighted on the driver's display even after a short time:

- ► Pay attention to the display messages.
- ► Pull away carefully and check the engaged transmission position.
- ► When parking, engage the parking brake and secure the vehicle against rolling away.
- ► Have the transmission checked immediately at a qualified specialist workshop.

Use the DIRECT SELECT lever to switch the transmission position. The current transmission position will be highlighted on the driver display.

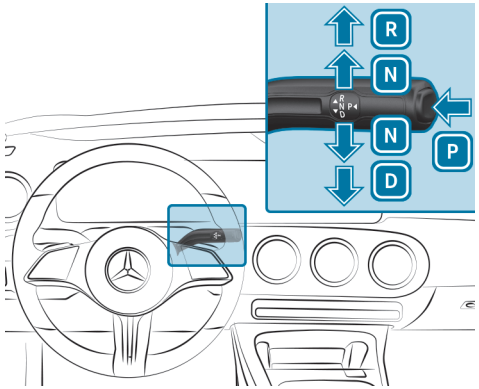

P Park position
R Reverse gear
N Neutral
D Drive position

ENGAGING REVERSE GEAR R

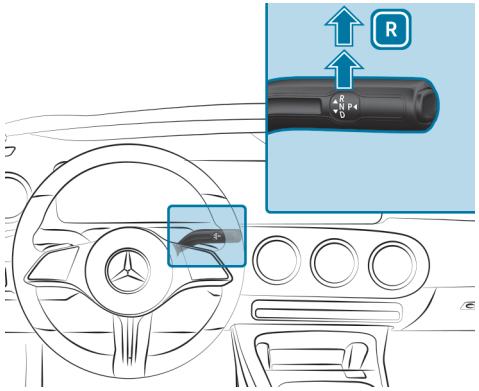

- ► Depress the brake pedal and push the DIRECT SELECT lever upwards past the first point of resistance.

ENGAGING NEUTRAL N

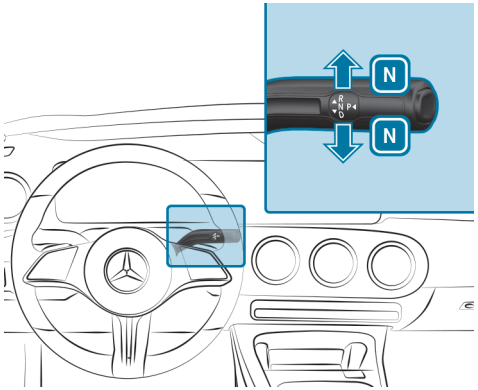

- ► Depress the brake pedal and push the DIRECT SELECT lever up or down to the first point of resistance, holding it there until transmission position N is shown on the driver display.

Subsequently releasing the brake pedal will allow you to move the vehicle freely, e.g. to push it or tow it away.

IF YOU WANT THE TRANSMISSION TO REMAIN IN NEUTRAL N EVEN IF THE VEHICLE IS SWITCHED OFF:

- ► Start the vehicle.
- ► Depress the brake pedal and engage neutral N.
- ► Release the brake pedal.
- ► Switch off the vehicle.

ⓘ If you then exit the vehicle leaving the key in the vehicle, the transmission will remain in neutral N.

ENGAGING PARK POSITION P

⚠ **WARNING**
Accident- and risk of injury with unsupervised children in the vehicle

IF YOU LEAVE CHILDREN UNATTENDED IN THE VEHICLE, THEY CAN IN PARTICULAR

- Open doors and thereby endanger other persons or road users.
- get out of the car and are hit by traffic.
- Operate vehicle equipment and become trapped, forexample.

IN ADDITION, THE CHILDREN COULD ALSO SET THE VEHICLE IN MOTION, FOR EXAMPLEBY:

- releasing the parking brake.
- change the gearbox setting.
- start the vehicle.

- ► Never leave children unattended in the vehicle.
- ► When leaving the vehicle, always take the SmartKey with you and lock the vehicle.
- ► Keep the key out of reach of children.

NOTE
Damage due to engaging park position [P] while the vehicle is rolling

If you shift the transmission into park position [P] while the vehicle is rolling, the transmission may be damaged.

- If the vehicle is rolling, do not open a door.
- Only engage the park position [P] when the vehicle is stationary.

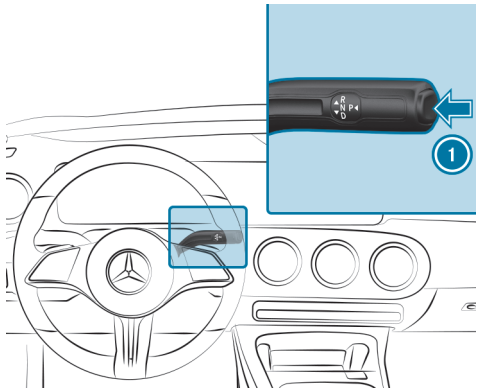

- Observe the notes on parking the vehicle (→ page 337).
- Depress the brake pedal until the vehicle comes to a standstill.
- When the vehicle is stationary, press the button (1).
  When the transmission position display [P] is shown, park position is engaged. If the transmission position display [P] is not shown, apply the parking brake and secure the vehicle to prevent it from rolling away.

Depending on the respective situation, it may take a short while until [P] is engaged. Therefore, always pay attention to the transmission position display.

PARK POSITION [P] WILL BE ENGAGED AUTOMATICALLY IF ONE OF THE FOLLOWING CONDITIONS IS MET:

- You switch the stationary vehicle off in transmission position [D] or [R].
- You open the driver's door when the vehicle is stationary in transmission position [D] or [R].
- You switch off the vehicle when coasting to a stop in transmission position [D] or [R], and bring the vehicle to a standstill.
- You shift to transmission position [N] with the vehicle coasting to a stop, bring the vehicle to a standstill and open the driver's door when the vehicle is at a standstill.
- It is imperative that park position [P] is engaged automatically for the vehicle.

To manoeuvre with the driver's door open, open the driver's door while the vehicle is at a standstill and engage transmission position [D] or [R] again.

ENGAGING DRIVE POSITION D

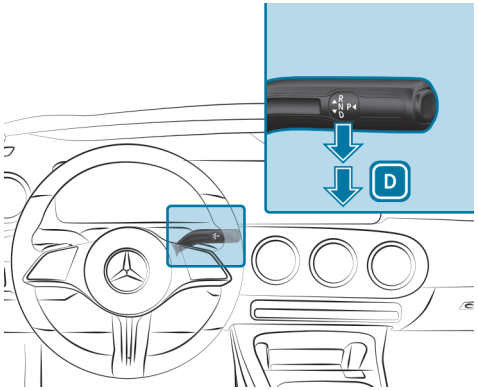

- Depress the brake pedal and push the DIRECT SELECT lever down past the first point of resistance.

Permanently activating/deactivating manual shifting

Multimedia system:

Settings >> Vehicle >> Driving

- Permanently activate or deactivate the function.

Function of 4MATIC

The flexible all-wheel distribution of 4MATIC means the drive is always ideally distributed between both axles. Depending on the respective situation, drive can be provided only to the front axle or to the rear axle, or drive is distributed continuously to both axles.

This means that recuperation can be used even more effectively and range of the vehicle can be increased (⟶ page 298).

Together with ESP® and 4ETS, 4MATIC improves the traction of your vehicle whenever a driven wheel spins due to a lack of traction.

If you fail to adapt your driving style, 4MATIC can neither reduce the risk of an accident nor override the laws of physics. It cannot take into account road, weather or traffic conditions. 4MATIC serves solely as an aid. You are responsible in particular for maintaining a safe distance from the vehicle in front, for vehicle speed, for braking in good time and for staying in lane.

ⓘ In wintry road conditions, maximum effect of the flexible all-wheel distribution can be achieved only if you use winter tyres (M+S tyres), with snow chains if necessary.

Charging the high-voltage battery

Notes on charging the high-voltage battery

DANGER
Risk of fatal injuries in case of improper handling of the Flexible Charging System Pro

If you use the Flexible Charging System Pro, this may e.g. result in fires or an electric shock.

► Observe the notes in the operating instructions for the Flexible Charging System Pro. Potential dangers may otherwise remain undetected.

NOTE
High-voltage battery damage due to leaving the vehicle idle for lengthy periods of time

Lithium-ion batteries experience a natural self-discharge.

Exhaustive discharging can therefore occur if the vehicle is idle for several months. This can damage the high-voltage battery.

► To avoid damage, please observe the following recommendations when handling the high-voltage battery.

NOTE
Accelerated ageing of the high-voltage battery due to not observing the following recommendations

As a result of its basic characteristics, the storage capacity of, and the amount of energy available from, the high-voltage battery decreases over the course of its life. As a result, the maximum electrical range that can be achieved by the vehicle is reduced and its maximum electrical output can be impaired.

THE FOLLOWING FACTORS COULD ACCELERATE THE AGEING OF THE HIGH-VOLTAGE BATTERY:

- frequently fully charging (charge level 100%) the high-voltage battery, especially when this process is not directly followed by a journey
- frequent rapid charging with direct current (mode 4)
- leaving the vehicle idle for lengthy periods at high ambient temperatures

► To avoid accelerated ageing, please observe the following recommendations when handling the high-voltage battery.

NOTE
Damage to the drive system when charging the high-voltage battery at extreme altitudes

The drive system may be damaged if the high-voltage battery is charged at elevations greater than 4,000 m above sea level.

It may then no longer be possible to continue the journey.

► Avoid charging processes at extreme altitudes.

RECOMMENDATIONS WHEN HANDLING THE HIGH-VOLTAGE BATTERY:

- If the outside temperature is above 10 °C, park the vehicle overnight with a state of charge below 20 % every six months.
- From a state of charge of 80 % the charging time increases significantly.
- At a state of charge of less than 20 %, particularly at very low outside temperatures below 0 °C, problems may be encountered when restarting the vehicle.
- Quick charge the high-voltage battery with direct current (mode 4) only when required.
- The charging time of the high-voltage battery may change during the battery service life.
- In the case of longer non-operational periods:
  - Park the vehicle with the high-voltage battery at a state of charge between 30 % and 50 %.
  - Do not permanently connect the high-voltage battery to power supply equipment.
  - Avoid high outside temperatures as far as possible.
  - Do not disconnect the 12 V battery. Otherwise the condition of the vehicle's high-voltage battery cannot be monitored.
  - Check the high-voltage battery's state of charge every six weeks (⟶ page 333).

YOU CAN CONTRIBUTE TO REDUCING THE VEHICLE'S ENERGY CONSUMPTION IN THE FOLLOWING WAYS:

- An anticipatory driving style (⟶ page 297)
- Reduced use of electrical consumers
- Having the vehicle regularly serviced

Depending on the national version, your vehicle is equipped with one of the following vehicle sockets.
You can charge the high-voltage battery with both alternating current (mode 2/3) and direct current (mode 4).

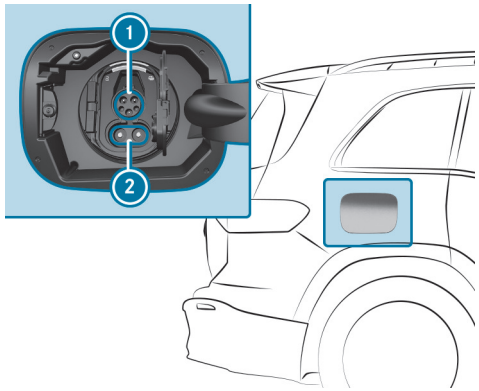

Combo 1 vehicle socket

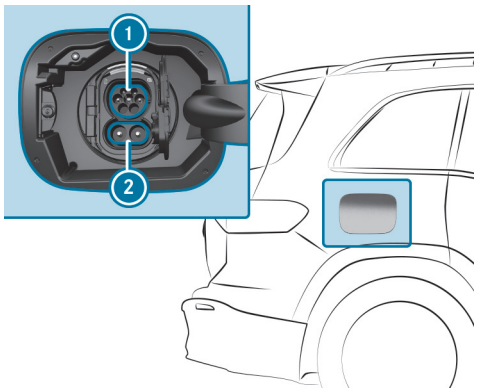

Combo 2 vehicle socket

1 AC charging connection type 1 or type 2

2 Socket extension for DC charging

ⓘ When using a CCS charging cable (Combined Charging System) for charging with direct current at a vehicle socket type Combo, both connections on vehicle socket 1 and 2 are used for charging.

CHARGING OPTIONS FOR THE HIGH-VOLTAGE BATTERY (MODE 2, 3 OR 4):

- While driving by means of recuperation
- Stationary AC charging:
  - at a mains socket (mode 2)
  - at a wallbox or charging station (mode 3)
- Stationary DC charging:
  - at a fast charging station (mode 4)

Depending on the country-specific vehicle equipment and your vehicle's charging cable, single-phase AC charging is also possible.

Observe the different mains requirements of your current location when charging. Only use charging cables which conform to the mains requirements. Consult a qualified electrician or your local mains operator if you have any questions.

It is recommended that you charge the high-voltage battery at a wallbox or charging station due to the higher charging power and better charging efficiency offered.

Information on charging settings (⟶ page 334).

SYSTEM LIMITS

THE PERFORMANCE OF THE HIGH-VOLTAGE BATTERY MAY BE IMPAIRED BY THE FOLLOWING:

- high or low outside temperatures
- electrical auxiliary consumers in the vehicle being switched on, e.g. operating the air conditioning system
- extended non-operational periods without charging

THE CHARGING TIME OR THE CHARGING POWER OF THE HIGH-VOLTAGE BATTERY MAY BE INCREASED BY THE FOLLOWING:

- high or low outside temperatures
- a low or high state of charge of the high-voltage battery
- the maximum available charging current of the charging device
- the charging process settings in the multimedia system (⟶ page 334)
- the age of the high-voltage battery

You can watch an animation on this topic via the following link:

Notes on charging the high-voltage battery at a mains socket (mode 2)

DANGER
Risk of fatal injuries in case of improper handling of the Flexible Charging System Pro

If you use the Flexible Charging System Pro, this may e.g. result in fires or an electric shock.

- ► Observe the notes in the operating instructions for the Flexible Charging System Pro. Potential dangers may otherwise remain undetected.

DANGER
Risk of fatal injury from incorrectly installed component parts

Connecting the charging cable to a mains socket using incorrectly installed components could cause fires or an electrical shock, for example.

- ► Only connect the charging cable to a mains socket that:
  - has been properly installed and
  - has been inspected by a qualified electrician.
- ► For safety reasons, only use the charging cable supplied with the vehicle or an original Mercedes-Benz charging cable.
- ► Purchase these parts at a Mercedes-Benz service centre and obtain advice there.

Mercedes-Benz thoroughly tests these original charging cables for their suitability for high-voltage charging of your vehicle.

- ► Never use a damaged charging cable.
- ► Do not use:
  - Extension cables
  - Extension reels
  - Multiple sockets
- ► Only use a socket adapter that has been tested and approved by the manufacturer for charging the high-voltage battery in an electric vehicle. Never use several socket adapters. For charg-

ing at the mains socket, only use appropriate socket adapters for AC charging.

► Observe the safety notes in the Owner's Manual for the socket adapter.

ONLY THE FOLLOWING CHARGING CABLES MAY BE USED:

- The charging cable supplied with the vehicle.
- A charging cable that has been approved for the vehicle.

The charging process can vary depending on the power supply equipment. The charging times when charging the high-voltage battery at a mains socket are considerably longer than when charging at a wallbox or charging station.

When doing so, always observe the local information.

Do not leave the charging cable control element hanging loose from a mains socket.

DO NOT LIFT THE CONTROL ELEMENT BY THE FOLLOWING COMPONENT PARTS:

- The charging cable plug
- The mains plug

When charging, protect the charging cable control element from excessive heat such as direct sunlight. Otherwise the charging process may be aborted.

Notes on charging the high-voltage battery at a wallbox or charging station (mode 3)

⚠ **DANGER**
Risk of fatal injury from incorrectly installed component parts

Connecting the charging cable to a wallbox using incorrectly installed components could cause fires or an electrical shock, for example.

► Only connect the charging cable to a wallbox that:

- has been properly installed and
- has been inspected by a qualified electrician.

► For safety reasons, only use charging cables that have been tested and approved by the manufacturer for charging the high-voltage battery in an electric vehicle.

► Never use damaged charging cables.

► Do not extend the charging cable.

► Only use a socket adapter that has been tested and approved by the manufacturer for charging the high-voltage battery in an electric vehicle. Never use several socket adapters. For charging at the wallbox or charging station with alternating current, only use socket adapters for AC charging.

► Observe the safety notes in the Owner's Manual for the wallbox.

If charging at a wallbox without pre-installed cable, use the optionally available charging cable for wallbox and charging station (mode 3). The charging cable is stowed in a bag in the load compartment.

Only use charging cables that have been tested and approved by the manufacturer for charging the high-voltage battery in an electric vehicle.

DANGER
Risk of fatal injury if damaged component parts are used

If you use a damaged component to connect the vehicle to a charging station, this may lead to fires or an electrical shock, for example.

- Visually inspect the charging station for obvious signs of damage, e.g. serious damage to the housing or charging cable connection.
- Never use damaged charging cables.
- Do not extend the charging cable.
- Do not use adapters. The only exception is if the adapter has been tested by Mercedes-Benz and approved for your vehicle.
- Be sure to observe the safety notes at the charging station.

Most charging stations must be activated before the charging process, e.g. using an RFID card or via Plug & Charge. Observe the on-site operator's instructions for the charging station and the notes on MB.CHARGE Public (⟶ page 502).

The amount of energy dispensed for the charging process, shown by the charging station, may be higher than the amount of energy actually absorbed by the high-voltage battery. This is the result of different levels of charging losses and is described as recharge efficiency. Charging losses occur, for example, due to heat that builds up when the vehicle is charging or from running auxiliary consumers. Further information on recharge efficiency can be obtained at a qualified specialist workshop.

Notes on charging the high-voltage battery at a quick charging station (mode 4)

DANGER
Risk of fatal injury if damaged component parts are used

If you use a damaged component to connect the vehicle to a charging station, this may lead to fires or an electrical shock, for example.

- Visually inspect the charging station for obvious signs of damage, e.g. serious damage to the housing or charging cable connection.
- Never use damaged charging cables.
- Do not extend the charging cable.
- Only use a socket adapter that has been tested and approved by the manufacturer for charging the high-voltage battery in an electric vehicle. Never use several socket adapters. When charging at a charging station with alternating current (mode 3), only use the corresponding socket adapters for charging with alternating current and when charging at a fast charging station with direct current (mode 4), only use socket adapters for direct current charging.
- Be sure to observe the safety notes at the charging station.

DANGER
Risk of fatal injuries when carrying out maintenance work during the charging process

During the charging process, the high-voltage on-board electrical system is under high voltage.

- Do not perform any maintenance work during the charging process.

Most charging stations must be activated before the charging process, e.g. using an RFID card or via Plug & Charge. Observe the on-site operator's instructions for the charging station and the notes on MB.CHARGE Public (→ page 502).

The charging cable for the vehicle must be no longer than 30 m owing to the legal requirements in some countries. This is to prevent the interference of signals being received by radio communication devices in the vehicle or in close proximity to the charging station. Be aware that parts of the charging cable may be routed underground. If in doubt, ask the charging station operator if this is the case before charging the high-voltage battery.

The amount of energy dispensed for the charging process, shown by the charging station, may be higher than the amount of energy actually absorbed by the high-voltage battery. This is the result of different levels of charging losses and is described as recharge efficiency. Charging losses occur, for example, due to heat that builds up when the vehicle is charging or from running auxiliary consumers. Further information on recharge efficiency can be obtained at a qualified specialist workshop.

Maximum permissible charging current for charging at a mains socket

DANGER
Risk of fatal injuries in case of improper handling of the Flexible Charging System Pro

If you use the Flexible Charging System Pro, this may e.g. result in fires or an electric shock.

- Observe the notes in the operating instructions for the Flexible Charging System Pro. Potential dangers may otherwise remain undetected.

NOTE
Overloading the mains socket due to excessive charging current

If the charging current is too high, the fuse could be tripped or the external mains supply could overheat.

- Ensure that the external power supply is designed for the charging current provided.
- For safety reasons, only use charging cables that are supplied with the vehicle on delivery or have been tested by Mercedes-Benz.
  Mercedes-Benz thoroughly tests these original charging cables for their suitability for high-voltage charging of your vehicle.
- Purchase these parts at a Mercedes-Benz service centre and obtain advice there.
- Check the maximum charging current using the charging power shown in the driver display.

The charging cable supplied is set to a country-specific maximum charging current. When charging abroad, the maximum value may exceed the permitted value for that country.

If you use the Mercedes-Benz Flexible Charging System Pro, the maximum charging current can be set for a specific country (see Owner's Manual for the charging system).

- Before charging at a mains socket, have the maximum permissible charging current for the relevant mains socket or the building mechanicals checked by a qualified electrician.
- When abroad, observe the country-specific laws when charging.

If you have questions concerning the charging current or if there is a malfunction, please contact a qualified specialist workshop.

Charging cable

OVERVIEW OF THE CHARGING CABLE OPERATING UNIT

DANGER
Risk of fatal injuries in case of improper handling of the Flexible Charging System Pro

If you use the Flexible Charging System Pro, this may e.g. result in fires or an electric shock.

- Observe the notes in the operating instructions for the Flexible Charging System Pro. Potential dangers may otherwise remain undetected.

Your vehicle may be equipped with one of the two charging cables described below for charging at the mains socket. The respective operating unit of the charging cable displays the current status of the charging process.

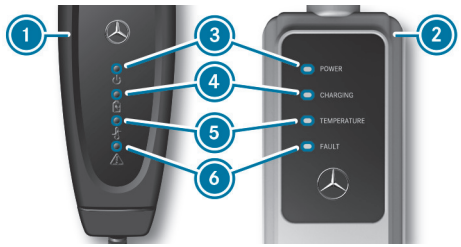

1 Gen5 charging cable
2 Gen4 charging cable
3 Supply voltage indicator
4 Charging process display
5 Temperature monitor display
6 Safety system display

SUPPLY VOLTAGE INDICATOR
3 lights up in white: there is mains voltage

CHARGING PROCESS DISPLAY
4 flashes in green: the high-voltage battery is being charged

TEMPERATURE MONITOR DISPLAY
5 flashes in red: overtemperature at the mains plug – charging process ended

5 LIGHTS UP RED AND

- 4 simultaneously flashes green: overtemperature – charging power will be reduced
- 4 does not flash: overtemperature – charging process terminated

If temperature monitor display 5 lights up, it can help to protect the charging cable from direct sunlight.

SAFETY SYSTEM DISPLAY (GEN4 CHARGING CABLE)

- 6 flashes red: charging cable or internal fault – charging process not possible
- 6 lights up red: infrastructure fault – charging process not possible, use a different mains socket

If the charging cable operating unit detects residual current or a malfunction, the charging process is interrupted. The charging process is resumed automatically when the malfunction has been rectified.

SAFETY SYSTEM DISPLAY (GEN5 CHARGING CABLE)
6 flashes red: charging cable or internal fault, charging process not possible, reset charging cable operating unit

6 LIGHTS UP RED AND

- 3 is off: power supply fault, charging process not possible, use a different mains socket
- 3 is on: vehicle-side fault, charging process not possible, reset charging cable operating unit

NOTES ON GEN5 CHARGING CABLE
When all four displays light up, the charging cable operating unit is performing a self-test.

If safety system 6 displays a charging cable fault or a vehicle-side fault, first reset the charging cable operating unit. To do this, disconnect the charging cable from the vehicle and from the mains socket and wait for approximately five seconds. If the malfunction persists after the charging cable is reconnected, charging at the mains socket is not possible. The charging cable must be replaced or the vehicle plug must be checked at a qualified specialist workshop, depending on the readout.

STOWING THE CHARGING CABLE

Always stow the vehicle's charging cable in the charging cable bag supplied and secure the charging cable bag in the boot or load compartment using the corresponding retaining strap. Otherwise, the charging cable bag with the charging cable is not sufficiently secured.

ⓘ If possible, store the adapter for charging the high-voltage battery together with the charging cable in the charging cable bag to prevent soiling.



Example: charging cable bag in the boot/load compartment

As delivered, charging cable bag (1) with retaining strap (2) is located in the boot or load compartment. To secure the charging cable bag, the retaining strap must be attached to tie-down eye (3). Do not use bag hooks to attach the retaining strap.

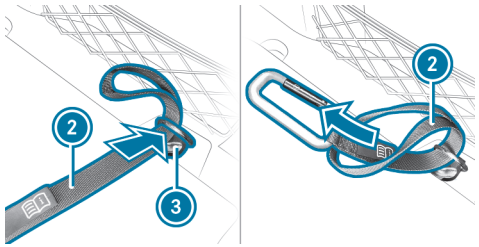

- Feed the loop end of retaining strap (2) through tie-down eye (3) in the boot or load compartment.
- Feed the end with the snap hook through the loop of retaining strap (2).

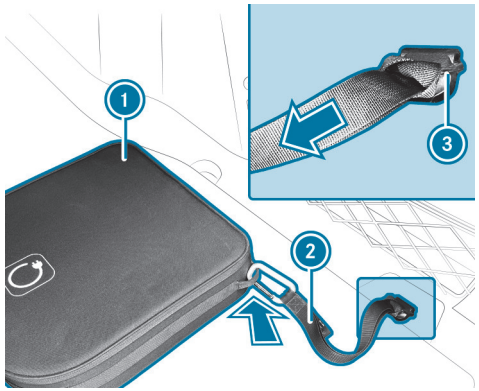

- Tighten retaining strap (2) so that the knot around tie-down eye (3) is tight and secure.
- Hook the snap hook of retaining strap (2) in a tie-down eye of charging cable bag (1).

Functions of the indicator lamps on the vehicle socket

Depending on the national version, your vehicle is equipped with one of the following vehicle sockets.

The socket flap is centrally locked and unlocked together with the vehicle.

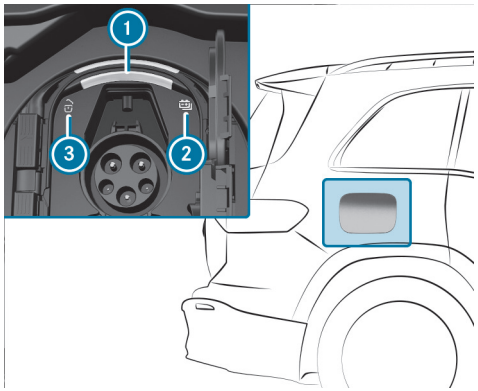

Combo 1 vehicle socket

1. Socket lamp
2. Charging process indicator lamp
3. Locking status indicator lamp

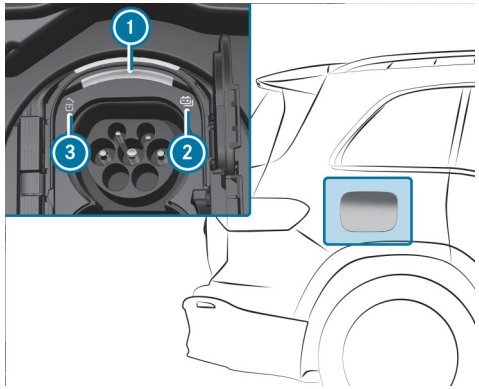

Combo 2 vehicle socket

1. Socket lamp
2. Charging process indicator lamp
3. Locking status indicator lamp

The upper curve of the socket lamp 1 is used for the lighting and flashes or lights up as with indicator lamp 3. The lower curve is used for the status display and flashes or lights up as with indicator lamp 2.

The colour and signalling of the indicator lamps 2 and 3 have the following meaning.

LOCKING STATUS 3

- Lights up white: vehicle socket unlocked; insert or remove charging cable
- Flashes white: malfunction during locking or unlocking

STATUS OF THE CHARGING PROCESS 2

- Lights up green (for approx. 60 s): charging process completed
- Flashes green: charging; active energy flow

- Lights up orange (for approx. 60 s): charging break
- Flashes orange: connection is being established
- Flashes red (for approx. 90 s): malfunction in vehicle; charging not possible

ⓘ If the charging sequence is activated for the ambient lighting, the charge level is also accompanied by ambient lighting (⟶ page 268).

Starting the alternating current charging process (mode 2/3)

⚠ **DANGER**
Risk of fatal injuries in case of improper handling of the Flexible Charging System Pro

If you use the Flexible Charging System Pro, this may e.g. result in fires or an electric shock.

► Observe the notes in the operating instructions for the Flexible Charging System Pro. Potential dangers may otherwise remain undetected.

⚠ **DANGER**
Risk of death when charging at a damaged socket

The charging process uses high voltage.

If the charging cable, the vehicle socket or the mains socket are damaged, you could receive an electric shock.

► Only use an undamaged charging cable.

► Avoid mechanical damage such as crushing, abrading or driving over the cable.

► Have a damaged vehicle socket replaced at a qualified specialist workshop as soon as possible.

► Never connect the charging cable to a damaged vehicle socket.

NOTE
Damage due to overheating of the charging cable and charge port

The charging cable and charge port may heat up within the permissible limit values during the charging process.

THE HEATING OF THE CHARGING CABLE AND CHARGE PORT IS INFLUENCED BY THE FOLLOWING FACTORS:

- The power supply equipment of the mains supply and the charging cable are intact.
- The instructions for handling the charging cable and control element on the charging cable have been observed.

► If the charging cable or the charge port become too hot, do not touch them and have the power supply equipment of the mains supply checked.

NOTE
Damage to or soiling of the vehicle socket

► If no charging cable is connected, always keep the socket cover and the socket flap closed. These protect the vehicle socket from dirt and damage.

► Before closing the socket flap, ensure that the socket cover is properly closed. Otherwise damage may occur and it may no longer be possible to open the socket flap.

NOTE
Damage to the vehicle socket or the charging cable connector due to incorrect handling

Do not use excessive force (maximum 300 N) to fully insert the charging cable connector into the vehicle socket. You may otherwise damage the vehicle socket, the charging cable connector or their contacts.

► If you feel there is increased resistance, pull the charging cable connector out of the socket and reinsert it.

Requirements:

- The transmission is in position P.
- The vehicle is unlocked or the vehicle is locked and the distance between the key and the vehicle does not exceed 1 m.
- The vehicle has not been started.
- The charging cable is not in tension.

ⓘ Depending on the national version, the vehicle is equipped with one of the following vehicle sockets.

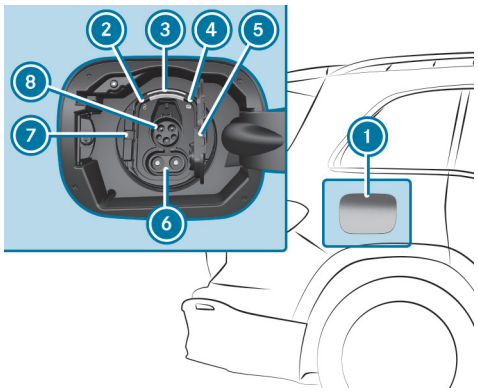

Combo 1 vehicle socket

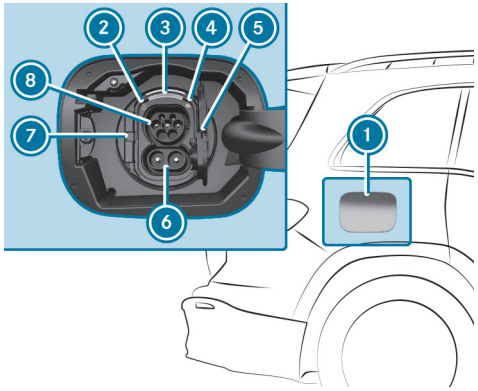

Combo 2 vehicle socket

- Press on the centre rear of socket flap (1) and swing the socket flap to the front.
  The [ ] indicator lamp (2) and upper status display (3) light up white.

ⓘ The socket flap (1) can also be opened via the multimedia system (⟶ page 334).

- Press catch (7) to the left and open socket cover (5).

ⓘ Only connection (8) is required for the charging cable plug. Only open the upper part of socket cover (5).

- For charging at a mains socket, fully insert the mains plug into the mains socket of the external power source.
- **Flexible Charging System Pro:** if necessary switch off protective earth conductor detection and set maximum charging current (see the charging system's operating instructions).
- Fully insert the charging cable plug into vehicle socket (8). If the wallbox/charging station is not equipped with a connecting cable, fully insert the plug of the vehicle's charging cable into the wallbox/charging station socket.
  Make sure that the inserted charging cable is not in tension.
  If the charging station is enabled, the [ ] indicator lamp (4) and lower status display (3) flash orange, and green as soon as the high-voltage battery is being charged.

ⓘ If the charging orchestration for the ambient lighting is activated, the ambient lighting lights up for about 30 seconds analogous to status display (3) (⟶ page 268).

When the Sound Experience is switched on, various situations, such as plugging in the charging cable plug or the start of the charging process, are accompanied by selected sounds (⟶ page 599).

When the charging cable is connected to the vehicle, the vehicle cannot be started or moved.

At the start of the charging process, the charge level display is shown on the driver display with a charging prediction. The charging prediction is the point in time at which the high-voltage battery will be fully charged.

ⓘ Depending on the temperature, the fan and battery cooling system may audibly switch on during the charging process.

ⓘ If the vehicle is non-operational for long periods and connected to the mains supply, the high-voltage battery will be recharged automatically as needed or when electrical consumers are activated (e.g. pre-entry climate control).

Ending the alternating current charging process (mode 2/3)

⚠ **DANGER**
Risk of death when charging at a damaged socket

The charging process uses high voltage.

If the charging cable, the vehicle socket or the mains socket are damaged, you could receive an electric shock.

- ► Only use an undamaged charging cable.
- ► Avoid mechanical damage such as crushing, abrading or driving over the cable.
- ► Have a damaged vehicle socket replaced at a qualified specialist workshop as soon as possible.
- ► Never connect the charging cable to a damaged vehicle socket.

NOTE
Damage due to overheating of the charging cable and charge port

The charging cable and charge port may heat up within the permissible limit values during the charging process.

THE HEATING OF THE CHARGING CABLE AND CHARGE PORT IS INFLUENCED BY THE FOLLOWING FACTORS:

- The power supply equipment of the mains supply and the charging cable are intact.
- The instructions for handling the charging cable and control element on the charging cable have been observed.

► If the charging cable or the charge port become too hot, do not touch them and have the power supply equipment of the mains supply checked.

NOTE
Damage to or soiling of the vehicle socket

► If no charging cable is connected, always keep the socket cover and the socket flap closed. These protect the vehicle socket from dirt and damage.

► Before closing the socket flap, ensure that the socket cover is properly closed. Otherwise damage may occur and it may no longer be possible to open the socket flap.

Requirements:

- The vehicle is unlocked or the vehicle is locked and the distance between the key and the vehicle does not exceed 1 m.

ⓘ Depending on the national version, the vehicle is equipped with one of the following vehicle sockets.

COMBO 1 VEHICLE SOCKET

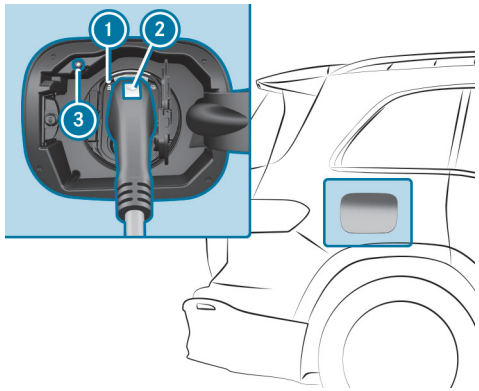

► Press charging interruption button (3).

The charging process is ended. The indicator lamp (1) lights up white. The vehicle socket is unlocked.

ⓘ As an alternative, and only if the charging interruption button (3) is not working, you can unlock the vehicle using the vehicle key or centrally from inside to end the charging process. If the indicator lamp (1) then lights up white, the vehicle socket is unlocked for around 30 seconds.

ⓘ The charging process can also be ended via the multimedia system (⟶ page 334).

- Press and hold button (2) on the charging cable plug and remove the charging cable plug from the vehicle socket.

ⓘ If you cannot remove the charging cable plug, repeat the unlocking procedure. If the charging cable plug is still locked, contact a qualified specialist workshop.

- Close the socket cover and the socket flap.
- Remove the charging cable plug from the mains socket, or from the socket on the wallbox/charging station, and stow the vehicle's charging cable safely in the vehicle (⟶ page 321).

COMBO 2 VEHICLE SOCKET

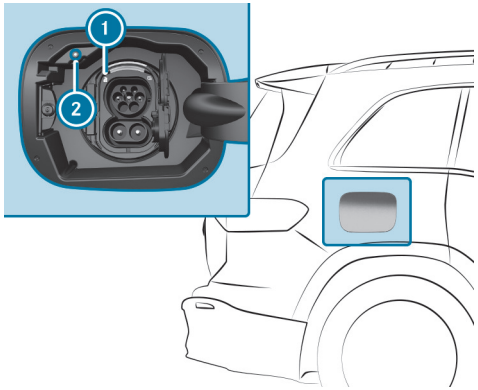

- Press charging interruption button (2).
  The charging process is ended. The [🔓] indicator lamp (1) lights up white. The vehicle socket is unlocked.

ⓘ As an alternative, and only if the charging interruption button (2) is not working, you can unlock the vehicle using the vehicle key or centrally from inside to end the charging process. If the [🔓] indicator lamp (1) then lights up white, the vehicle socket is unlocked for around 30 seconds.

ⓘ The charging process can also be ended via the multimedia system (⟶ page 334).

- Remove the charging cable plug from the vehicle socket.

ⓘ If you cannot remove the charging cable plug, repeat the unlocking procedure. If the charging cable plug is still locked, contact a qualified specialist workshop.

- Close the socket cover and the socket flap.
- Remove the charging cable plug from the mains socket, or from the socket on the wallbox/charging station, and stow the vehicle's charging cable safely in the vehicle (⟶ page 321).

The indicator lamp on the vehicle socket remains lit for some time after the charging cable plug has been disconnected and then goes out.

Starting the DC charging process (mode 4)

DANGER
Risk of death when charging at a damaged socket

The charging process uses high voltage.

If the charging cable, the vehicle socket or the mains socket are damaged, you could receive an electric shock.

- ► Only use an undamaged charging cable.
- ► Avoid mechanical damage such as crushing, abrading or driving over the cable.
- ► Have a damaged vehicle socket replaced at a qualified specialist workshop as soon as possible.
- ► Never connect the charging cable to a damaged vehicle socket.

NOTE
Damage due to overheating of the charging cable and charge port

The charging cable and charge port may heat up within the permissible limit values during the charging process.

THE HEATING OF THE CHARGING CABLE AND CHARGE PORT IS INFLUENCED BY THE FOLLOWING FACTORS:

- The power supply equipment of the mains supply and the charging cable are intact.
- The instructions for handling the charging cable and control element on the charging cable have been observed.

- ► If the charging cable or the charge port become too hot, do not touch them and have the power supply equipment of the mains supply checked.

NOTE
Damage to or soiling of the vehicle socket

- ► If no charging cable is connected, always keep the socket cover and the socket flap closed. These protect the vehicle socket from dirt and damage.
- ► Before closing the socket flap, ensure that the socket cover is properly closed. Otherwise damage may occur and it may no longer be possible to open the socket flap.

NOTE
Damage to the vehicle socket or the charging cable connector due to incorrect handling

Do not use excessive force (maximum 300 N) to fully insert the charging cable connector into the vehicle socket. You may otherwise damage the vehicle socket, the charging cable connector or their contacts.

► If you feel there is increased resistance, pull the charging cable connector out of the socket and reinsert it.

Requirements:

- The transmission is in position P.
- The vehicle is unlocked or the vehicle is locked and the distance between the key and the vehicle does not exceed 1 m.
- The vehicle has not been started.
- The charging cable is not in tension.

Depending on the national version, the vehicle is equipped with one of the following vehicle sockets.

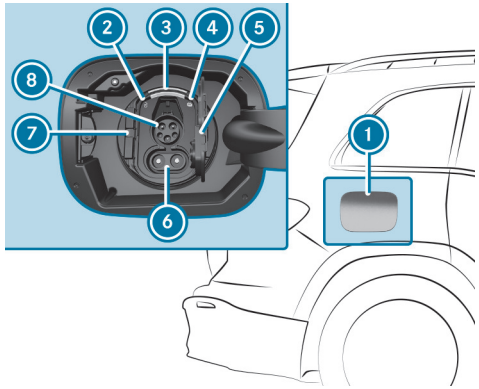

Combo 1 vehicle socket

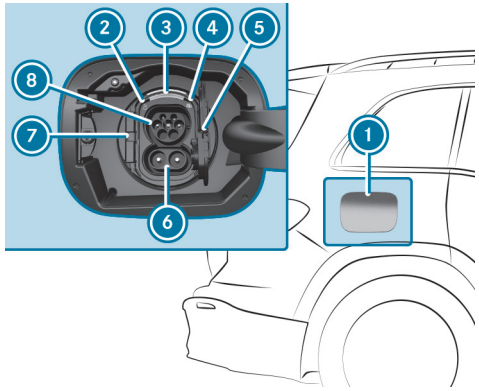

Combo 2 vehicle socket

► Press on the centre rear of socket flap (1) and swing the socket flap to the front.
The indicator lamp (2) and upper status display (3) light up white.

ⓘ Socket flap (1) can also be opened via the multimedia system (⟶ page 334).

► Press catch (7) to the left and open socket cover (5).

ⓘ Connections (6) and (8) are required for the CCS charging cable plug. Both sections of socket cover (5) must therefore be opened.

► Fully insert the CCS charging cable plug into the vehicle socket.
Make sure that the inserted charging cable is not in tension.
If the charging station is enabled, the indicator lamp (4) and lower status display (3) flash orange, and green as soon as the high-voltage battery is being charged.

ⓘ If the charging orchestration for the ambient lighting is activated, the ambient lighting lights up for about 30 seconds analogous to status display (3) (⟶ page 268).
When the Sound Experience is switched on, various situations, such as plugging in the charging cable plug or the start of the charging process, are accompanied by selected sounds (⟶ page 599).

When the charging cable is connected to the vehicle, the vehicle cannot be started or moved.

At the start of the charging process, the charge level display is shown on the driver display with a charging prediction. The charging prediction either refers to the predicted state of charge at the set departure time, or the time at which the high-voltage battery will be fully charged.

ⓘ Depending on the temperature, the fan and battery cooling system may audibly switch on during the charging process.

ⓘ If the vehicle is non-operational for long periods and connected to the mains supply, the high-voltage battery will be recharged automatically as needed or when electrical consumers are activated (e.g. pre-entry climate control).

Ending the DC charging process (mode 4)

⚠ **DANGER**
Risk of death when charging at a damaged socket

The charging process uses high voltage.

If the charging cable, the vehicle socket or the mains socket are damaged, you could receive an electric shock.

► Only use an undamaged charging cable.

► Avoid mechanical damage such as crushing, abrading or driving over the cable.

► Have a damaged vehicle socket replaced at a qualified specialist workshop as soon as possible.

► Never connect the charging cable to a damaged vehicle socket.

NOTE
Damage due to overheating of the charging cable and charge port

The charging cable and charge port may heat up within the permissible limit values during the charging process.

THE HEATING OF THE CHARGING CABLE AND CHARGE PORT IS INFLUENCED BY THE FOLLOWING FACTORS:

- The power supply equipment of the mains supply and the charging cable are intact.
- The instructions for handling the charging cable and control element on the charging cable have been observed.

► If the charging cable or the charge port become too hot, do not touch them and have the power supply equipment of the mains supply checked.

NOTE
Damage to or soiling of the vehicle socket

► If no charging cable is connected, always keep the socket cover and the socket flap closed. These protect the vehicle socket from dirt and damage.

► Before closing the socket flap, ensure that the socket cover is properly closed. Otherwise damage may occur and it may no longer be possible to open the socket flap.

Requirements:

- The vehicle is unlocked or the vehicle is locked and the distance between the key and the vehicle does not exceed 1 m.

ⓘ Depending on the national version, the vehicle is equipped with one of the following vehicle sockets.

COMBO 1 VEHICLE SOCKET

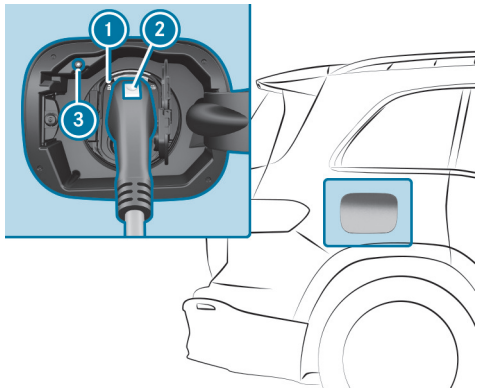

► Press charging interruption button (3).

The charging process is ended. The indicator lamp (1) lights up white. The vehicle socket is unlocked.

ⓘ As an alternative, and only if charging interruption button (3) is not working, you can unlock the vehicle using the vehicle key or centrally from inside to end the charging process. If the indicator lamp (1) then lights up white, the vehicle socket is unlocked for around 30 seconds.

ⓘ The charging process can also be ended via the multimedia system (⟶ page 334).

► Press and hold button (2) on the charging cable plug and remove the charging cable plug from the vehicle socket.

ⓘ If you cannot remove the charging cable plug, unlock the vehicle and repeat the unlocking procedure. If the charging cable plug is still locked, contact a qualified specialist workshop.

► Close the socket cover and the socket flap.

COMBO 2 VEHICLE SOCKET

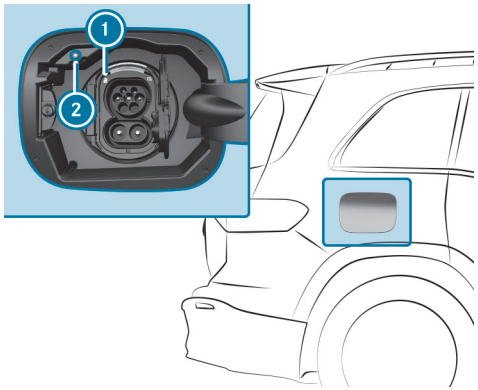

► Press charging interruption button (2).
The charging process is ended. The indicator lamp (1) lights up white. The vehicle socket is unlocked.

ⓘ As an alternative, and only if charging interruption button (2) is not working, you can unlock the vehicle using the vehicle key or centrally from inside to end the charging process. If the indicator lamp (1) then lights up white, the vehicle socket is unlocked for around 30 seconds.

ⓘ The charging process can also be ended via the multimedia system (⟶ page 334).

► Remove the charging cable plug from the vehicle socket.

ⓘ If you cannot remove the charging cable plug, unlock the vehicle and repeat the unlocking procedure. If the charging cable plug is still locked, contact a qualified specialist workshop.

► Close the socket cover and the socket flap.

ⓘ The left indicator lamp (1) on the vehicle socket remains lit for some time after the charging cable plug has been disconnected and then goes out.

Function of the charge level display on the driver display

ⓘ The data in the illustration is shown as an example.

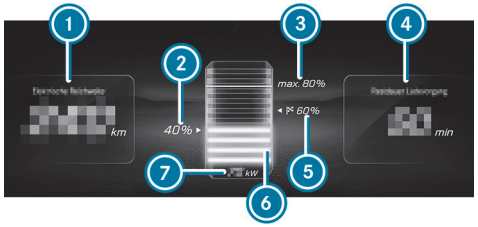

Example

1. Remaining range at current state of charge
2. Current state of charge of the high-voltage battery
3. Maximum state of charge (as per the setting)
4. Expected end of charge cycle or remaining time until fully charged (up to the selected maximum state of charge)
5. State of charge recommended by the range monitor to reach the next destination
6. Dynamic charge level display
7. Current charging capacity

Indicated remaining range 1 may vary due to various factors, e.g. driving style or topography.

The driver display shows the charge level display for around two minutes when the charging cable is connected. As long as the charging cable is connected to the vehicle, the charge level display is also displayed briefly after unlocking or locking the vehicle or after opening a door.

The value of current charging capacity 7 can differ from the display on the charging station. At a charging capacity of 10 kW or higher, the value in the charge level display is rounded off and shown without a decimal place.

The value in 4 varies depending on the charging process setting. It displays the charging prediction, e.g. the time at which the selected state of charge will be reached or the state of charge at the pre-selected departure time.

Configuring the charging settings

Multimedia system:

EQ » Charging

SETTING THE CHARGING PROGRAM

- Select Home, Work or Standard.

When driving to a charging station, the temperature of the vehicle's high-voltage battery is optimised so that the maximum charging power can be accessed at the charging station. On the central display, the pre-temperature control of the battery is marked with and the approved maximum DC charging power in kW until the optimum battery temperature is reached. The advance temperature control of the battery is completed and the corresponding symbol faded out as soon as there are adequate battery temperature conditions.

IN THE FOLLOWING SITUATIONS, THE DISPLAY OF THE APPROVED DC CHARGING POWER IS HIDDEN:

- The maximum charging power of the vehicle battery has been reached.
- The driver cancels the journey to the charging station.
- A vehicle plug is connected to the vehicle.

ⓘ The range recharged during a charging process is marked on the central display with [⚡].

You can watch an animation on this topic via the following link:

OPENING THE SOCKET FLAP IN THE MBUX MULTIMEDIA SYSTEM

- ► Open socket flap to open the socket flap.
- ► The charging process can be interrupted using Cancel charging. The charging process is ended and the charging cable is unlocked.

ⓘ Further notes on charging with alternating current: (⟶ page 323) or direct current: (⟶ page 329).

UNLOCKING THE CHARGING CABLE (MODE 3 OR 4)

ⓘ When the function is active, the charging cable is unlocked when the maximum state of charge is reached.

- ► Select Home or Work.
- ► Activate or deactivate Unlock charging cable.

ACTIVATING OR DEACTIVATING LOCATION-BASED CHARGING

- ► Select Charging program, home or Charging program, work .
- ► Activate or deactivate Select based on location.

When the function is activated, the vehicle's current position is saved as one of the selected options. The charging programme is automatically switched when arriving at the address again.

SETTING THE DEPARTURE TIME

The set departure times are used for the vehicle's pre-entry climate control and for predictions regarding the approximate state of charge and range at the time selected.

- ► Select Departure time.

THE FOLLOWING CHARGING TIMES CAN BE SELECTED:

- Individual charging times
- a Week profile

SETTING AN INDIVIDUAL DEPARTURE TIME

- ► Select Add new time and set a new departure time.

or

- ► Select [✎] and adjust an existing departure time.

SETTING REPEAT DAYS

- ► Select Add new time and set a new departure time.
- ► Mark the relevant weekdays for which the departure time will apply and confirm with [OK].

or

- ► Select [✎] and edit existing repeat days.

CHARGING POWER

- ► Select [ⓘ].

  The reasons for a reduction in the current charging power are displayed.

VARIOUS INFLUENCES CAN LEAD TO A REDUCTION IN THE MAXIMUM CHARGING POWER:

- Insufficient battery temperature [🌡].

- Current SOC range of the battery in which reduced charging power can contribute to the longevity of the battery .
- Reduced charging power at the charging station .
- Charging system
- Charge control

Parking

Parking the vehicle

WARNING
Risk of accident and injury caused by an insufficiently secured vehicle rolling away

If the vehicle is not securely parked sufficiently, it can roll away in an uncontrolled way even at a slight downhill gradient.

- ► On uphill or downhill gradients, turn the front wheels so that the vehicle rolls towards the kerb if it starts moving.
- ► apply the parking brake.
- ► Switch the transmission to position P.

WARNING
Accident- and risk of injury with unsupervised children in the vehicle

IF YOU LEAVE CHILDREN UNATTENDED IN THE VEHICLE, THEY CAN IN PARTICULAR

- Open doors and thereby endanger other persons or road users.
- get out of the car and are hit by traffic.
- Operate vehicle equipment and become trapped, forexample.

IN ADDITION, THE CHILDREN COULD ALSO SET THE VEHICLE IN MOTION, FOR EXAMPLEBY:

- releasing the parking brake.
- change the gearbox setting.
- start the vehicle.

- ► Never leave children unattended in the vehicle.
- ► When leaving the vehicle, always take the SmartKey with you and lock the vehicle.
- ► Keep the key out of reach of children.

NOTE
Damage to the vehicle due to it rolling away

- Always secure the vehicle against rolling away.

IF THE VEHICLE IS PARKED FOR A LENGTHY PERIOD, OBSERVE THE FOLLOWING INFORMATION:

- At very low outside temperatures below 0 °C in particular, ensure that the state of charge of the high-voltage battery is at least 20%. This will help you to avoid any problems when you start the vehicle again.
- If possible, avoid parking spaces in direct sunlight.

Observe the information on charging the high-voltage battery (⟶ page 312).

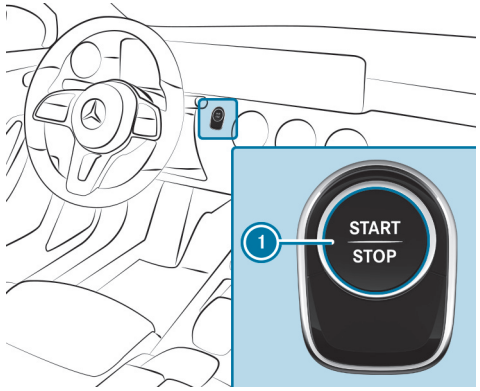

- Bring the vehicle to a standstill by depressing the brake pedal.
- On uphill or downhill gradients, turn the front wheels so that the vehicle will roll towards the kerb if it starts moving.
- Apply the electric parking brake.
- Engage transmission position P with the vehicle stationary and the brake pedal depressed (⟶ page 308).
- Switch off the vehicle by pressing the button 1.
- Release the service brake slowly.
- Exit and then lock the vehicle.

When you park the vehicle, you can still operate the side windows and the panoramic sliding sunroof for approximately four minutes as long as the driver's door is closed.

Garage door opener (HomeLink®)

PROGRAMMING THE HOMELINK® BUTTONS

WARNING
Risk of injury by becoming trapped when opening and closing a garage door

When you operate or program a garage door with an integrated garage door opener, persons can become trapped or struck by the garage door if they stand within its range of movement.

- Always make sure that nobody is within the range of the garage door's movement.

ONLY OPERATE THE FOLLOWING DOORS USING THE GARAGE DOOR OPENER:

- Doors with a safety stop and reversing feature
- Doors that comply with the applicable safety standards

Before programming the garage door opener, park the vehicle outside the garage. Ensure that the vehicle is switched on but not started.

Requirements:

- The vehicle has been parked outside the garage or outside the range of movement of the door.
- The vehicle is switched on.
- The vehicle is not in READY (→ page 291).
- The original remote control for the garage door is used.

ⓘ The garage door opener function is always available when the vehicle is switched on.

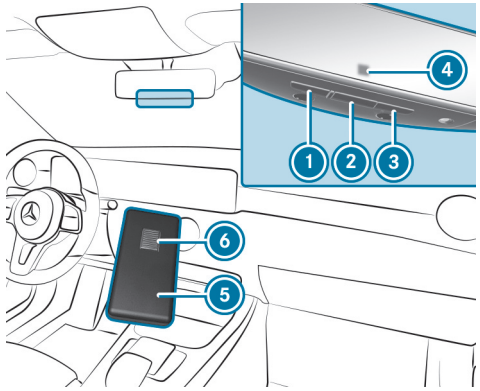

► **Programming procedure:** press the button to be programmed (1, 2 or 3) and then release it.

If the selected button is not programmed, the indicator lamp 4 flashes orange slowly.

ⓘ To reprogram a button that has already been programmed, press the corresponding button until the indicator lamp 4 starts to flash orange slowly. This may take up to 20 seconds.

► Point the remote control 5 from a distance of between 5 cm and 30 cm underneath the mirror towards button 1, 2 or 3.

► Press and hold the button 6 on the remote control 5 until one of the following signals appears:

- The indicator lamp 4 lights up green continuously. Programming is complete.
- The indicator lamp 4 flashes green. Programming was successful.

The selected HomeLink® button is now programmed.

► **Test the programming:** press and hold the HomeLink® button for two seconds.

► Release the HomeLink® button and, after three seconds, press and hold it again for two seconds.

► Repeat this process once more (three times in total).

ⓘ If you have a garage door system with fixed code or QuickTrain technology, pressing the programmed HomeLink® button opens or closes the garage door.

If the garage door is not working and the indicator lamp (4) is flashing quickly, you must perform rolling code synchronisation (→ page 340).

PERFORMING ROLLING CODE SYNCHRONISATION (IF REQUIRED)

⚠ **WARNING**
Risk of injury by becoming trapped when opening and closing a garage door

When you operate or program a garage door with an integrated garage door opener, persons can become trapped or struck by the garage door if they stand within its range of movement.

► Always make sure that nobody is within the range of the garage door's movement.

ONLY OPERATE THE FOLLOWING DOORS USING THE GARAGE DOOR OPENER:

- Doors with a safety stop and reversing feature
- Doors that comply with the applicable safety standards

Before programming the garage door opener, park the vehicle outside the garage. Ensure that the vehicle is switched on but not started.

ⓘ The garage door opener function is always available when the vehicle is switched on.

If the garage door is not working and the indicator lamp in the inside mirror is flashing quickly, your garage door system operates with rolling code. In this case, you must perform rolling code synchronisation.

Information on rolling code synchronisation: In the following steps, you must press the "Learn" "Program" or "Smart" button on the garage door opener in your garage. Please note that the names of the buttons may vary depending on the manufacturer. For more information, refer to the owner's manual for the garage door opener.

- Have someone help you so that the steps can be carried out faster and more easily.
- You may need a ladder or something of similar stability to help you reach the buttons. Do not stand on your vehicle to carry out these steps!
- Certain timings must be observed for the following steps. It may be necessary to try carrying out the steps several times.

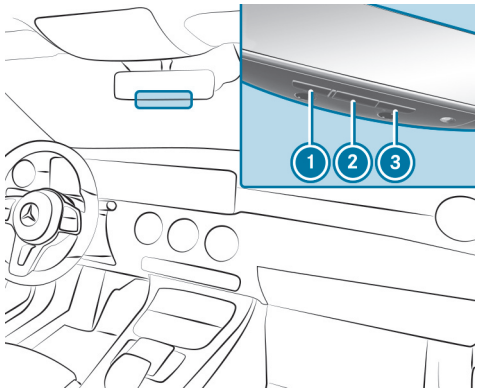

► Find the "Learn", "Program" or "Smart" button on the garage door opener in the garage.

The shape and colour of the buttons vary depending on the manufacturer.

► Press the "Learn", "Program" or "Smart" button.

Depending on the manufacturer of the garage door opener, an indicator lamp may start to flash.

- ▶ Within 30 seconds, press and hold the HomeLink® button in the vehicle for three seconds.
- ▶ Press the HomeLink® button again and hold it for three seconds.
- ▶ Repeat this process once more (three times in total).

  Rolling code synchronisation is now complete. HomeLink® should now activate your garage door equipped with a rolling code.

ⓘ Please note that some garage door openers may require the HomeLink® button to be pressed for different lengths of time during the synchronisation process. Observe the owner's manual for the garage door manufacturer.
More information can be found on the https://www.homelink.com

RESOLVING PROBLEMS WHEN PROGRAMMING HOMELINK®

⚠ **WARNING**
Risk of injury by becoming trapped when opening and closing a garage door

When you operate or program a garage door with an integrated garage door opener, persons can become trapped or struck by the garage door if they stand within its range of movement.

- ▶ Always make sure that nobody is within the range of the garage door's movement.

ONLY OPERATE THE FOLLOWING DOORS USING THE GARAGE DOOR OPENER:

- Doors with a safety stop and reversing feature
- Doors that comply with the applicable safety standards

Before programming the garage door opener, park the vehicle outside the garage. Ensure that the vehicle is switched on but not started.

ⓘ The garage door opener function is always available when the vehicle is switched on.

- ▶ Ensure that the remote control used for programming is approved by the manufacturer of the garage door opener and activates the door.

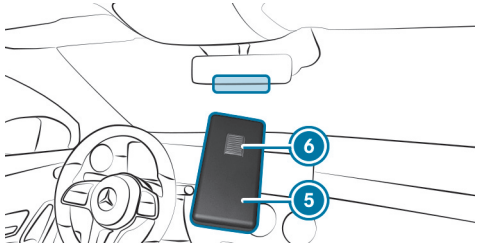

- ▶ Replace the batteries in the remote control (5).
- ▶ Hold the remote control (5) at various angles in front of the inside mirror from a distance of between 5 cm and 30 cm.

  Hold each position for at least 25 seconds before trying another position.
- ▶ Hold the remote control (5) at the same angles at various distances in front of the inside mirror. You should test every position for at least 25 seconds before trying another position.
- ▶ On remote controls that only transmit for a limited period, press the button (6) on the remote control (5) again before transmission ends.

SUPPORT AND ADDITIONAL PROGRAMMING INFORMATION:

- **European Union (EU):** call the HomeLink® hotline on (0) 0800 046 635 465 (free of charge) or +49 (0) 7132 3455 733 (charges apply)
  Please note that the free number may not be available depending on your mobile phone provider.
- Visit the https://www.homelink.com

DELETING THE HOMELINK® BUTTONS

WARNING
Risk of injury by becoming trapped when opening and closing a garage door

When you operate or program a garage door with an integrated garage door opener, persons can become trapped or struck by the garage door if they stand within its range of movement.

► Always make sure that nobody is within the range of the garage door's movement.

ONLY OPERATE THE FOLLOWING DOORS USING THE GARAGE DOOR OPENER:

- Doors with a safety stop and reversing feature
- Doors that comply with the applicable safety standards

Before programming the garage door opener, park the vehicle outside the garage. Ensure that the vehicle is switched on but not started.

The garage door opener function is always available when the vehicle is switched on.

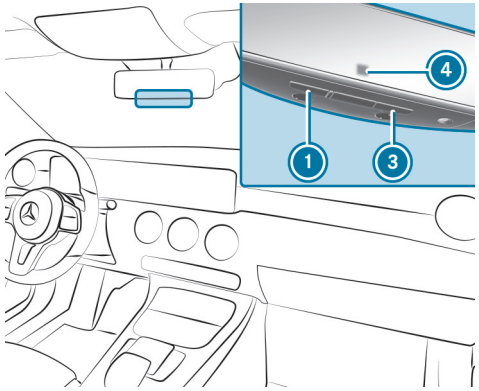

► Press and hold buttons 1 and 3.
The indicator lamp 4 lights up orange.

► If the indicator lamp 4 flashes green, release buttons 1 and 3.
This may take up to 10 seconds.
The entire memory has been deleted.

SPECIAL PROGRAMMING MODES (IF REQUIRED)

WARNING
Risk of injury by becoming trapped when opening and closing a garage door

When you operate or program a garage door with an integrated garage door opener, persons can become trapped or struck by the garage door if they stand within its range of movement.

► Always make sure that nobody is within the range of the garage door's movement.

Before programming the garage door opener, park the vehicle outside the garage. Ensure that the vehicle is switched on but not started.

The garage door opener function is always available when the vehicle is switched on.

D-mode: A special programming mode is required for some devices available on the market. Only use this if this is expressly stated in the programming instructions in the owner's manual for the device or on the https://www.homelink.com.

UR-mode: UR-mode is a special programming mode that is only required for use with the HomeLink® universal receiver. The HomeLink® universal receiver must be purchased separately. It is required to connect incompatible garage door openers or garage doors with HomeLink®.

Electric parking brake

FUNCTION OF THE ELECTRIC PARKING BRAKE (AUTOMATIC APPLICATION)

WARNING
Accident- and risk of injury with unsupervised children in the vehicle

IF YOU LEAVE CHILDREN UNATTENDED IN THE VEHICLE, THEY CAN IN PARTICULAR

- Open doors and thereby endanger other persons or road users.
- get out of the car and are hit by traffic.
- Operate vehicle equipment and become trapped, forexample.

IN ADDITION, THE CHILDREN COULD ALSO SET THE VEHICLE IN MOTION, FOR EXAMPLEBY:

- releasing the parking brake.
- change the gearbox setting.
- start the vehicle.

► Never leave children unattended in the vehicle.

► When leaving the vehicle, always take the SmartKey with you and lock the vehicle.

► Keep the key out of reach of children.

THE ELECTRIC PARKING BRAKE IS APPLIED IF THE TRANSMISSION IS IN POSITION P AND ONE OF THE FOLLOWING CONDITIONS IS FULFILLED:

- The vehicle is switched off.

- The driver's seat belt is not fastened and the driver's door is opened.

ⓘ To prevent application: pull the handle of the electric parking brake (⟶ page 345).

IN THE FOLLOWING SITUATIONS, THE ELECTRIC PARKING BRAKE IS ALSO APPLIED:

- The HOLD function is keeping the vehicle stationary.
- Active Distance Assist DISTRONIC is bringing the vehicle to a standstill.
- Active Parking Assist is keeping the vehicle stationary.
- **In addition, one of the following conditions must be fulfilled:**
  - The vehicle is switched off.
  - The driver's seat belt is not fastened.
  - There is a system malfunction.
  - The power supply is insufficient.
  - The vehicle is stationary for a lengthy period.

When the electric parking brake is applied, the red indicator lamp (P) lights up on the driver display.

FUNCTION OF THE ELECTRIC PARKING BRAKE (AUTOMATIC RELEASE)

THE ELECTRIC PARKING BRAKE IS RELEASED WHEN THE FOLLOWING CONDITIONS ARE FULFILLED:

- The driver's door is closed.
- The vehicle has been started.
- The transmission is in position D or R and you depress the accelerator pedal, or you shift from transmission position P to D or R on level ground.
- If the transmission is in position R, the tailgate must be closed.
- The driver's seat belt is not properly fastened.

  If the driver's seat belt is not fastened, the following condition must be met:
  - You shift from transmission position P.

When the electric parking brake is released, the red (P) indicator lamp in the driver display goes out.

APPLYING/RELEASING THE ELECTRIC PARKING BRAKE MANUALLY

WARNING
Accident- and risk of injury with unsupervised children in the vehicle

IF YOU LEAVE CHILDREN UNATTENDED IN THE VEHICLE, THEY CAN IN PARTICULAR

- Open doors and thereby endanger other persons or road users.
- get out of the car and are hit by traffic.
- Operate vehicle equipment and become trapped, forexample.

IN ADDITION, THE CHILDREN COULD ALSO SET THE VEHICLE IN MOTION, FOR EXAMPLEBY:

- releasing the parking brake.
- change the gearbox setting.
- start the vehicle.

► Never leave children unattended in the vehicle.

► When leaving the vehicle, always take the SmartKey with you and lock the vehicle.

► Keep the key out of reach of children.

APPLYING

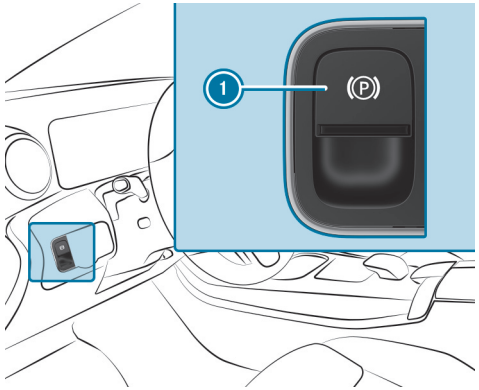

► Push handle (1).
The red (P) indicator lamp lights up in the driver display.

The electric parking brake is only securely applied if the red (P) indicator lamp is lit continuously.

RELEASING

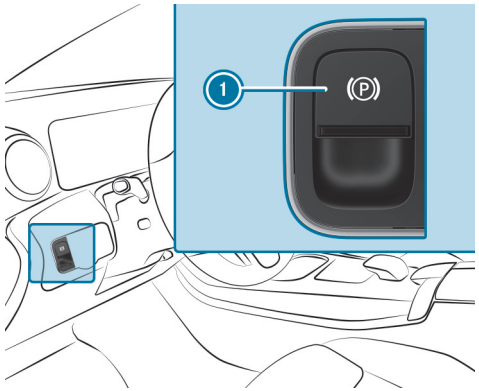

- Switch on the vehicle.
- Pull handle (1).
  The red (P) indicator lamp in the driver display goes out.

EMERGENCY BRAKING

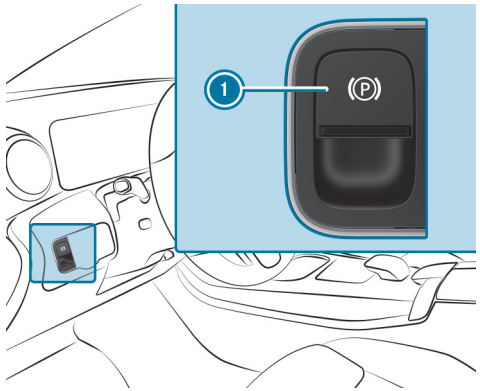

- Press and hold handle (1).
  As long as the vehicle is in motion, the Release parking brake message is displayed and the red (P) indicator lamp flashes.
  When the vehicle has been braked to a standstill, the electric parking brake is applied. The red (P) indicator lamp lights up on the driver display.

Information on collision detection for a parked vehicle

If an impact is detected with tow-away protection switched on in the vehicle, and collision detection is active, a message is displayed in the multimedia system when the vehicle is switched on.

YOU WILL THEN RECEIVE INFORMATION REGARDING THE FOLLOWING:

- The area of the vehicle that may have been damaged.
- The force of the impact.

THE FOLLOWING SITUATIONS CAN LEAD TO INADVERTENT ACTIVATION:

- The parked vehicle is moved, forexample in a double-decker garage.
- The locked vehicle is parked in a car wash.

ⓘ Deactivate tow-away protection to prevent inadvertent activation. If you deactivate tow-away protection, collision detection will also be deactivated.
You can permanently deactivate collision detection via the multimedia system (⟶ page 347).

SYSTEM LIMITS

DETECTION MAY BE RESTRICTED IN THE FOLLOWING SITUATIONS:

- if damage is caused to the vehicle without impact, for example, if an outside mirror is torn off or the paint is damaged by a key
- in the event of an impact involving the collision partner at low speed
- if the electric parking brake is not applied

ⓘ You are responsible for your vehicle. You should therefore always ensure that your vehicle is free of damage and is roadworthy.

Setting collision detection for a parked vehicle

Multimedia system:

Settings >> Vehicle >> Open/close >> Vehicle protection

- Activate or deactivate the function via Tow-away protec..

Driving and driving safety systems

Driving systems and your responsibility

Your vehicle is equipped with driving systems which assist you in driving, parking and manoeuvring the vehicle. The driving systems are only aids. They are not a substitute for you paying attention to your surroundings and do not relieve you of your responsibility pertaining to road traffic law. The driver is always responsible for maintaining a safe distance to the vehicle in front, for vehicle speed, for braking in good time and for staying in lane. Pay attention to the traffic conditions at all times and intervene when necessary. Be aware of the limitations regarding the safe use of these systems.

Driving systems can neither reduce the risk of accident if you fail to adapt your driving style nor override the laws of physics. They cannot always take into account road, weather or traffic conditions.

ⓘ Some driving systems can regulate or limit the speed to a previously set value. Draw attention to the stored speed when changing drivers.

Information on vehicle sensors and cameras

⚠ **WARNING**
Risk of accident if the detection capability of the vehicle sensors or cameras is impaired

If the areas of the vehicle sensors or cameras are obscured, damaged or dirty, some driving and driving safety systems may no longer function correctly. There is a risk of an accident.

- ► Always keep the areas of the vehicle sensors and cameras clear of obstructions and clean.
- ► Have damage to the bumpers, radiator grille or stone chipping in the area of the cameras in the windscreen repaired at a qualified specialist workshop.

Some driving and driving safety systems use cameras as well as radar or ultrasonic sensors to monitor the area in front of, behind or next to the vehicle.

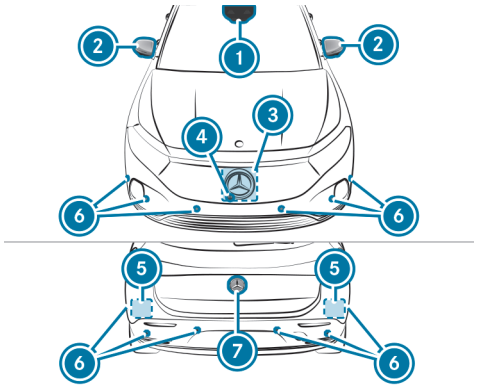

1 Multifunction camera
2 Cameras in the exterior mirrors
3 Front radar
4 Front camera
5 Corner radars
6 Ultrasonic sensors
7 Reversing camera

In particular, keep the sensor and camera areas free of dirt, ice or slush. (⟶ page 617). The sensors and cameras must not be covered and the detection ranges around them must be kept free. Do not attach additional number plate brackets, advertisements, stickers, car foils or rock chip protection films in the detection range of the sensors and cameras. Make sure there are no overhanging loads protruding into the detection range.

If there is damage to a bumper or the radiator shell, or after an impact, have the function of the sensors checked at a qualified specialist workshop. Have damage or stone chipping in the area of the cameras in the windscreen repaired at a qualified specialist workshop.

ⓘ The reversing camera can extend and retract automatically for the purpose of calibration, even though there is no camera image on the display.

Overview of driving systems and driving safety systems

DRIVING SYSTEMS AND DRIVING SAFETY SYSTEMS

- ABS (⟶ page 350)
- BAS (⟶ page 350)
- ESP® (⟶ page 351)
- ESP® Crosswind Assist (⟶ page 352)
- ESP® trailer stabilisation (⟶ page 352)
- EBD (⟶ page 353)
- STEER CONTROL (⟶ page 353)
- HOLD function (⟶ page 353)
- Hill Start Assist (⟶ page 354)
- Adaptive Brake Lights (⟶ page 355)
- ATTENTION ASSIST (⟶ page 355)
- Cruise control (⟶ page 357)
- Limiter (⟶ page 357)
- Speed Limit Assist (country-dependent) (⟶ page 379)
- Traffic Sign Assist (⟶ page 382)
- Traffic light view (⟶ page 386)
- Suspension with adaptive damping adjustment (⟶ page 391)

DRIVING ASSISTANCE PACKAGE

- Active Distance Assist DISTRONIC (⟶ page 361)
- Active Speed Limit Assist (⟶ page 368)
- Route-based speed adaptation (⟶ page 369)
- Active Brake Assist (⟶ page 374)
- Active Steering Assist (⟶ page 370)
- Active Emergency Stop Assist (⟶ page 373)
- Blind Spot Assist with exit warning (⟶ page 387)
- Active Lane Keeping Assist (⟶ page 389)

ⓘ These functions are part of the Driving Assistance Package. Certain functions are only available in some countries. Some functions are also available without the Driving Assistance Package, albeit with restricted functionality.

PARKING SYSTEMS

- Reversing camera (⟶ page 391)
- 360° camera (⟶ page 395)
- Parking Assist PARKTRONIC (⟶ page 400)
- Active Parking Assist (⟶ page 403)

ⓘ Availability of individual functions depends on the respective equipment and country of use.

Function of ABS

THE ANTI-LOCK BRAKE SYSTEM (ABS) REGULATES THE BRAKE PRESSURE IN CRITICAL DRIVING SITUATIONS:

- During braking, for instance, at maximum full-stop braking or if there is insufficient tyre traction, the wheels are prevented from locking.
- Vehicle steerability while braking is ensured.

If ABS intervenes when braking, you will feel a pulsing in the brake pedal. The pulsating brake pedal can be an indication of hazardous road conditions and can serve as a reminder to take extra care while driving.

SYSTEM LIMITS

- ABS is active from speeds of approximately 5 km/h.
- ABS may be impaired or may not function if a malfunction has occurred and the yellow (ABS) ABS warning lamp lights up continuously after the vehicle is started.

Function of BAS

⚠ **WARNING**
Risk of an accident caused by a malfunction in BAS (Brake Assist System)

If BAS is malfunctioning, the braking distance in an emergency braking situation is increased.

► Depress the brake pedal with full force in emergency braking situations. ABS prevents the wheels from locking.

The Brake Assist System (BAS) supports your emergency braking situation with additional brake force.

IF YOU DEPRESS THE BRAKE PEDAL QUICKLY, BAS IS ACTIVATED:

- BAS automatically boosts the brake pressure.
- BAS can shorten the braking distance.
- ABS prevents the wheels from locking.

The brakes will function as usual once you release the brake pedal. BAS is deactivated.

ESP® (Electronic Stability Program)

FUNCTION OF ESP®

CHARACTERISTICS WHEN ESP® IS ACTIVATED

THE ELECTRONIC STABILITY PROGRAM (ESP®) CAN MONITOR AND IMPROVE DRIVING STABILITY AND TRACTION IN THE FOLLOWING SITUATIONS WITHIN PHYSICAL LIMITS:

- when starting off on wet or slippery roads
- when braking

IF THE VEHICLE DEVIATES FROM THE DIRECTION DESIRED BY THE DRIVER, ESP® CAN STABILISE THE VEHICLE BY INTERVENING IN THE FOLLOWING WAYS:

- One or more wheels are individually braked.
- The output of the drive system is adjusted according to the situation.

WHEN ESP® IS DEACTIVATED, THE OFF WARNING LAMP LIGHTS UP CONTINUOUSLY:

- Driving stability will no longer be improved.
- The drive wheels could spin.
- ETS/4ETS traction control is still active.

WHEN THE WARNING LAMP FLASHES, ONE OR SEVERAL WHEELS HAS REACHED ITS GRIP LIMIT:

- Adapt your driving style to suit the current road and weather conditions.
- Do not deactivate ESP®.
- Only depress the accelerator pedal as far as is necessary when starting off.

CHARACTERISTICS WHEN ESP® IS DEACTIVATED

⚠ **WARNING**
Risk of skidding if ESP® is deactivated

If you deactivate ESP®, ESP® cannot carry out vehicle stabilisation.

► ESP® should only be deactivated in the following situations.

TO IMPROVE TRACTION, ESP® CAN BE SWITCHED OFF IN THE FOLLOWING SITUATIONS:

- when using snow chains
- in deep snow
- on sand or gravel

Spinning the wheels results in a cutting action, which enhances traction.

If the warning lamp lights up continuously, ESP® is not available due to a malfunction.

OBSERVE THE FOLLOWING INFORMATION:

- Indicator and warning lamps (⟶ page 805)
- Display messages (⟶ page 750)

ETS/4ETS

ETS/4ETS traction control (Electronic Traction System) is part of ESP® and makes it possible to pull away and accelerate on a slippery road.

ETS/4ETS CAN IMPROVE THE VEHICLE'S TRACTION BY INTERVENING IN THE FOLLOWING WAYS:

- The drive wheels are braked individually if they spin.
- More drive torque is transferred to the wheel or wheels with traction.

INFLUENCE OF DRIVE PROGRAMS ON ESP®

The drive programs enable ESP® to adapt to different weather and road conditions as well as the driver's preferred driving style. Depending on the selected drive program, the appropriate ESP® mode will be activated (⟶ page 303).

FUNCTION OF ESP® CROSSWIND ASSIST

ESP® CROSSWIND ASSIST DETECTS SUDDEN GUSTS OF SIDE WIND AND HELPS THE DRIVER TO KEEP THE VEHICLE IN THE LANE:

- ESP® Crosswind Assist is active at vehicle speeds between approx. 80 km/h and 200 km/h when driving straight ahead or cornering slightly.
- The vehicle is stabilised by means of individual brake application on one side.

FUNCTION OF ESP® TRAILER STABILISATION

WARNING
Risk of accident in poor road and weather conditions

In poor road and weather conditions, the trailer stabilisation cannot prevent lurching of the vehicle/trailer combination. Trailers with a high centre of gravity may tip over before ESP® detects this.

► Always adapt your driving style to suit the current road and weather conditions.

WHEN DRIVING WITH A TRAILER, ESP® TRAILER STABILISATION CAN STABILISE YOUR VEHICLE IF THE TRAILER BEGINS TO SWERVE FROM SIDE TO SIDE:

- ESP® trailer stabilisation is active above speeds of 65 km/h .
- Slight swerving is reduced by means of a targeted, individual brake application on one side.
- In the event of severe swerving, the drive system output is also reduced and all wheels are braked.

ESP® TRAILER STABILISATION MAY BE IMPAIRED OR MAY NOT FUNCTION IF:

- The trailer is not connected correctly or is not detected properly by the vehicle.

SWITCHING ESP® ON OR OFF IN THE MBUX MULTIMEDIA SYSTEM
Multimedia system:



ESP® can only be activated/deactivated using quick-access when at least one other function is available in quick-access. ESP® can otherwise be found in the Assistance menu.

- ► Select ESP.
- ► Select On or Off.

ESP® is deactivated if the  ESP® OFF warning lamp lights up continuously on the driver display.

Observe the information on the warning lamps and the display messages which may be shown on the driver display.

Function of EBD

ELECTRONIC BRAKEFORCE DISTRIBUTION (EBD) IS CHARACTERISED BY THE FOLLOWING:

- Monitoring and regulating the brake pressure on the rear wheels.
- Improved driving stability when braking, especially on bends.

Function of STEER CONTROL

STEER CONTROL assists you by transmitting a noticeable steering force to the steering wheel in the direction required for vehicle stabilisation.

THIS STEERING RECOMMENDATION IS GIVEN IN THE FOLLOWING SITUATIONS:

- both right wheels or both left wheels are on a wet or slippery road surface when you brake
- the vehicle starts to skid

SYSTEM LIMITS

STEER CONTROL MAY BE IMPAIRED OR MAY NOT FUNCTION IN THE FOLLOWING SITUATIONS:

- ESP® is deactivated.
- ESP® is malfunctioning.
- The steering is malfunctioning.

If ESP® is malfunctioning, you will be assisted further by the power steering.

HOLD function

HOLD FUNCTION
The HOLD function holds the vehicle at a standstill without requiring you to depress the brake pedal, e.g. while waiting in traffic.

The HOLD function is only an aid. The responsibility for the vehicle safely standing still remains with the driver.

SYSTEM LIMITS
The HOLD function is only intended to provide assistance when driving and is not a sufficient means of safeguarding the vehicle against rolling away when stationary.

- The gradient must not be greater than 30 %.

ACTIVATING/DEACTIVATING THE HOLD FUNCTION

WARNING
Risk of an accident due to the HOLD function being active when you leave the vehicle

IF THE VEHICLE IS ONLY BRAKED WITH THE HOLD FUNCTION IT COULD, IN THE FOLLOWING SITUATIONS, ROLL AWAY:

- If there is a malfunction in the system or in the power supply.
- If the HOLD function is deactivated by depressing the accelerator pedal or brake pedal, e.g. by a vehicle occupant.

► Always secure the vehicle against rolling away before you leave it.

Requirements:

- The vehicle is stationary.
- The driver's door is closed or the driver is correctly belted.
- The vehicle has been started.
- The electric parking brake has been released.
- The transmission position D, R or N is engaged.

ACTIVATING THE HOLD FUNCTION

► Depress the brake pedal, and after a short time quickly depress further until the HOLD display appears on the driver display.

► Release the brake pedal.

DEACTIVATING THE HOLD FUNCTION

► Depress the accelerator pedal to start off.

or

► Depress the brake pedal until HOLD disappears from the driver display.

THE HOLD FUNCTION IS ALSO DEACTIVATED IN THE FOLLOWING SITUATIONS:

- The parking position P is engaged.
- The vehicle is secured with the electric parking brake.

IN THE FOLLOWING SITUATIONS, THE VEHICLE IS HELD BY THE PARKING POSITION P AND/OR ELECTRIC PARKING BRAKE:

- The seat belt is unfastened and the driver's door is opened.
- The vehicle is switched off.
- There is a system malfunction.
- The power supply is insufficient.

Function of Hill Start Assist

WARNING
Risk of accident and injury due to the vehicle rolling away

After a short time, Hill Start Assist no longer holds the vehicle.

► Swiftly move your foot from the brake pedal to the accelerator pedal. Do not leave the vehicle when it is being held by Hill Start Assist.

HILL START ASSIST HOLDS THE VEHICLE FOR A SHORT TIME WHEN STARTING OFF UPHILL UNDER THE FOLLOWING CONDITIONS:

- The transmission position D or R for starting off uphill is selected.
- The electric parking brake has been released.

This gives you enough time to move your foot from the brake pedal to the accelerator pedal and depress it without the vehicle rolling away immediately.

Intelligent crawler function

The intelligent crawler function assists you when starting off, manoeuvring and parking. When the brake pedal is released, the vehicle rolls in the direction of the engaged transmission position. The crawler torque is adapted when reaching an uphill gradient.

In recuperation level D AUTO (⟶ page 298) the intelligent crawler mode also assists you up to speeds of approximately 20 km/h, by following the vehicle in front at approximately the same speed.

The intelligent crawler mode is only an aid. The driver is responsible for maintaining a sufficient distance to the vehicle in front.

SYSTEM LIMITS
The intelligent crawler mode does not automatically stop the vehicle if the vehicle in front stops. Bring the vehicle to a standstill using the brake pedal.

Function of Adaptive Brake Lights

ADAPTIVE BRAKE LIGHTS WARN FOLLOWING TRAFFIC IN AN EMERGENCY BRAKING SITUATION WITH THE FOLLOWING ACTIONS:

- flashing the brake lamps
- activating the hazard warning lights (⟶ page 55)

If the vehicle is braked sharply from speeds above 50 km/h, the brake lamps flash rapidly. This provides traffic travelling behind you with an even more noticeable warning.

ATTENTION ASSIST

FUNCTION OF ATTENTION ASSIST
ATTENTION ASSIST assists you on long, monotonous journeys, e.g. on motorways and trunk roads. If indicators of fatigue or increasing lapses in concentration on the part of the driver are detected, the system suggests taking a break.

ATTENTION ASSIST serves solely as an aid. It cannot always promptly detect fatigue or lapses in concentration. The system is not a substitute for a well-rested and attentive driver. On long journeys, take regular, timely breaks to allow for adequate recovery.

YOU CAN CHOOSE BETWEEN TWO SETTINGS:

- **Standard:** normal system sensitivity.
- **Sensitive:** higher system sensitivity. The driver is warned earlier and the attention level detected by ATTENTION ASSIST is adapted accordingly.

If fatigue or increasing lapses in concentration are detected, the driver display shows the warning: ATTENTION ASSIST: Take a break!You can acknowledge the message and take a break if necessary. If you do not take a break and ATTENTION ASSIST continues to detect increasing lapses in concentration, you will be warned again after a minimum of 15 minutes.



THE FOLLOWING INFORMATION IS SHOWN ON THE DRIVER DISPLAY:

- Journey time since the last break
- The attention level determined by ATTENTION ASSIST

The more segments (1) of the circle that are displayed, the higher the detected attention level. Fewer segments (1) are displayed in the circle as the attention level decreases.

If ATTENTION ASSIST is unable to calculate the attention level and cannot issue a warning, the System suspended message appears.

If the driver display shows a warning, the MBUX multimedia system offers to search for a rest area. You can select a rest area and start navigation to this rest area.

When you restart the vehicle, ATTENTION ASSIST is automatically switched on. The last sensitivity level selected remains stored.

SYSTEM LIMITS
ATTENTION ASSIST is active in the 60 km/h to 200 km/h speed range.

If the system is unavailable due to a fault, the ATTENTION ASSIST warning lamp lights up continuously on the driver display.

THE FUNCTIONALITY OF ATTENTION ASSIST IS RESTRICTED, AND WARNINGS MAY BE DELAYED OR NOT ISSUED AT ALL IN THE FOLLOWING SITUATIONS IN PARTICULAR:

- If you have been driving for less than approximately 30 minutes
- If the road condition is poor (uneven road surface or potholes)
- If there is a strong side wind
- If you adopt a sporty driving style (high cornering speeds or high rates of acceleration)
- If the Active Steering Assist function of Active Distance Assist DISTRONIC is active
- If the clock is set to the incorrect time
- If you change lanes and vary your speed frequently in active driving situations

Observe also any information regarding display messages that can be displayed on the driver display.

THE ATTENTION ASSIST DROWSINESS AND ALERTNESS ASSESSMENT IS RESET AND RESTARTED WHEN CONTINUING THE JOURNEY IN THE FOLLOWING SITUATIONS:

- If you switch off the vehicle.
- If you unfasten your seat belt and open the driver's door (e.g. to change drivers or take a break).

SETTING ATTENTION ASSIST
Multimedia system:
Settings » Assistance » Assistance » ATTENTION ASSIST

- Activate or deactivate ATTENTION ASSIST.

SETTING THE SENSITIVITY

- Select [⚙] next to ATTENTION ASSIST.
- Select Standard or Sensitive.

Cruise control and limiter

FUNCTION OF CRUISE CONTROL

Cruise control regulates the speed to the value selected by the driver.

Forexample, the stored speed is not deleted if you accelerate to overtake. If you remove your foot from the accelerator pedal after overtaking, cruise control will resume speed regulation back to the stored speed.

You can set any speed above 20 km/h up to the maximum design speed or up to the stored winter tyre limit. In the drive program [E], the adjustable speed is limited to 130 km/h.

Observe the notes on driving systems and your responsibility; otherwise you may fail to recognise potential dangers (⟶ page 348).

NOTIFICATIONS ON THE DRIVER DISPLAY

[⏲] **Grey:** cruise control is selected but not yet activated or temporarily in passive mode.

[⏲] **Green:** cruise control is activated.

A stored speed is shown below the display [⏲] and is indicated in the speedometer.

SYSTEM LIMITS

Cruise control may be unable to maintain the stored speed on uphill gradients. The stored speed is resumed when the gradient evens out.

On long and steep downhill gradients, you must increase recuperation in good time. This is particularly important when driving a laden vehicle. The electric motor's braking effect can thus be used to charge the high-voltage battery. This will take some of the strain off the brake system and prevent the brakes from overheating and wearing too quickly.

DO NOT USE CRUISE CONTROL IN THE FOLLOWING SITUATIONS:

- In traffic situations which require frequent changes of speed, e.g. in heavy traffic, on winding roads.
- On slippery roads. Accelerating can cause the drive wheels to lose traction and the vehicle could then begin skidding.
- When visibility is poor.

FUNCTION OF THE LIMITER

The limiter restricts the speed of the vehicle. To reduce the speed to the stored speed, the limiter applies the brakes automatically.

YOU CAN LIMIT THE SPEED AS FOLLOWS:

- **Variable:** for short-term limitation of the travel speed, e.g. in built-up areas
- **Permanent:** for a longer-term speed restriction, e.g. in winter tyre mode

You can set any speed above 20 km/h up to the maximum design speed or up to the stored winter tyre limit. You can also adjust the settings while the vehicle is stationary if the vehicle has been started.

Observe the notes on driving systems and your responsibility; you may otherwise fail to recognise potential dangers (⟶ page 348).

NOTIFICATIONS ON THE DRIVER DISPLAY

[LIM] **Grey:** variable limiter is selected but not yet activated.

LIM **Flashing grey:** variable limiter is temporarily in passive mode.

LIM **Green:** variable limiter is activated.

A stored speed is shown below the display LIM and is indicated in the speedometer.

If you depress the accelerator pedal beyond the pressure point (kickdown), the variable limiter switches to passive mode. The LIM passive message appears on the driver display and the display LIM starts flashing.

THE VARIABLE LIMITER IS REACTIVATED IN THE FOLLOWING SITUATIONS:

- If the vehicle speed drops below the stored speed.
- If the stored speed is called up.
- If you store a new speed.

OPERATING CRUISE CONTROL OR THE VARIABLE LIMITER

WARNING
Risk of accident due to stored speed

If you call up the stored speed and this is lower than your current speed, the vehicle decelerates.

► Take into account the traffic situation before calling up the stored speed.

Requirements:

CRUISE CONTROL

- The transmission is in position D.
- The vehicle speed is at least 20 km/h.
- ESP® must be activated, but not intervening.
- Cruise control is selected.

VARIABLE LIMITER

- The variable limiter is selected.

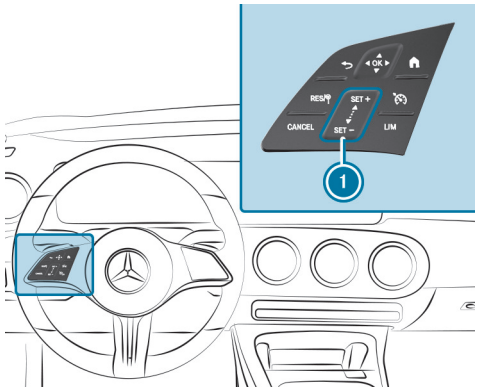

Steering wheel control panel for cruise control and variable limiter

RES Adopts the stored/detected speed

CANCEL Deactivates cruise control/the variable limiter

1 SET + SET - Control panel to increase/decrease speed

Selects cruise control

LIM Selects the variable limiter

Operating cruise control and the variable limiter:

► Press the corresponding button with only one finger or swipe across the control panel.

Switching between cruise control and the variable limiter:

- **To select cruise control:** press [⏲].
- **To select the variable limiter:** press [LIM].

ⓘ Vehicles with Active Distance Assist DISTRONIC: the variable limiter is selected using a different button (⟶ page 364).

Activating cruise control or the variable limiter:

- Press [SET +] or [SET -] on the control panel (1).

  The current vehicle speed is stored and maintained by the vehicle via cruise control, or is restricted by the variable limiter.

or

- Press [RES].

  The last stored speed is called up and maintained by the vehicle via cruise control, or is restricted by the variable limiter.

  If the last stored speed has previously been deleted, the current vehicle speed is stored.

ⓘ When you switch off the vehicle, the last speed stored is deleted. When you activate cruise control or Active Distance Assist DISTRONIC, the last speed stored for the variable limiter is deleted.

Increasing/decreasing the stored speed:

- To increase the stored speed: swipe upwards from the bottom of the control panel (1).
  - The stored speed is increased by 1 km/h.
- To decrease the stored speed: swipe downwards from the top of the control panel (1).
  - The stored speed is decreased by 1 km/h.

or

- Briefly press [SET +] or [SET -] on the control panel (1).

  The stored speed is increased or decreased to the next increment of ten (e.g. to 50 km/h or 60 km/h).

or

- Press and hold [SET +] or [SET -] on the control panel (1).

  The stored speed is increased or decreased to the next increment of ten, and afterwards by increments of 10 km/h.

or

- Accelerate the vehicle to the desired speed.
- Press [SET +] on the control panel (1).

ⓘ When the variable limiter is switched to passive mode, you cannot increase or decrease its stored speed in increments of 1 km/h.

Adopting a detected speed:

If cruise control/the variable limiter is activated and Traffic Sign Assist has detected a traffic sign with a maximum permissible speed and this is displayed on the driver display:

- Press RES/⊕.

  The maximum permissible speed shown by the traffic sign is stored and the vehicle maintains, or does not exceed this speed.

Deactivating cruise control or the variable limiter:

- Press CANCEL.

ⓘ If you brake, deactivate ESP® or if ESP® intervenes, cruise control is deactivated. The variable limiter is not deactivated.

ⓘ When you switch off the vehicle, the last speed stored is deleted. When you activate cruise control or Active Distance Assist DISTRONIC, the last speed stored for the variable limiter is deleted.

INFORMATION ON THE PERMANENT LIMITER

If the vehicle should never exceed a specific speed (e.g. for driving in winter tyre mode), you can set this speed with the permanent limiter.

You can do this by limiting the speed between 160 km/h and 240 km/h in the multimedia system (⟶ page 51).

The permanent limiter will be ineffective for speed limits set above the vehicle's maximum speed or maximum design speed.

The set speed is shown on the driver display immediately before it is reached. Confirming this message will cancel all other notifications until the vehicle is switched off again. Notifications are resumed when the vehicle is restarted or if the set speed is changed.

The permanent limiter can not be switched to passive mode even during kickdown, and the travel speed remains below the set speed.

SETTING THE SPEED LIMIT FOR WINTER TYRES

Multimedia system:

⌂ ▸▸ Settings ▸▸ Vehicle ▸▸ Driving ▸▸ Winter tyre limit

- Activate or deactivate Winter tyre limit.

SETTING A SPEED

- Select Winter tyre limit.
- Select a speed.

Active Distance Assist DISTRONIC

FUNCTION OF ACTIVE DISTANCE ASSIST DISTRONIC

WARNING
Risk of accident from acceleration or braking by Active Distance Assist DISTRONIC

ACTIVE DISTANCE ASSIST DISTRONIC MAY ACCELERATE OR BRAKE IN THE FOLLOWING CASES, FOR EXAMPLE:

- If the vehicle pulls away using Active Distance Assist DISTRONIC.
- If the stored speed is called up and is considerably faster or slower than the currently driven speed.
- If Active Distance Assist DISTRONIC no longer detects a vehicle in front or does not react to relevant objects.

► Always carefully observe the traffic conditions and be ready to brake at all times.

► Take into account the traffic situation before calling up the stored speed.

WARNING
Risk of accident due to insufficient deceleration by Active Distance Assist DISTRONIC

Active Distance Assist DISTRONIC brakes your vehicle with up to 50% of the possible deceleration. If this deceleration is not sufficient, Active Distance Assist DISTRONIC alerts you with a visual and acoustic warning.

► Adjust your speed and maintain a suitable distance from the vehicle in front.

► Brake the vehicle yourself and/or take evasive action.

WARNING
Risk of accident if detection function of Active Distance Assist DISTRONIC is impaired

ACTIVE DISTANCE ASSIST DISTRONIC DOES NOT REACT OR HAS A LIMITED REACTION:

- when driving on a different lane or when changing lanes
- to pedestrians, animals, bicycles or stationary vehicles, or unexpected obstacles
- to complex traffic conditions
- to oncoming vehicles and crossing traffic

As a result, Active Distance Assist DISTRONIC may neither give warnings nor intervene in such situations.

► Always observe the traffic conditions carefully and react accordingly.

ⓘ Active Distance Assist DISTRONIC described for vehicles without Driving Assistance Package may be a Digital Extra (depending on the respective country of use) (⟶ page 94).

Active Distance Assist DISTRONIC maintains the set speed on free-flowing roads. If vehicles are detected ahead the set distance is maintained, if necessary until the vehicle comes to a standstill. The vehicle accelerates or brakes depending on the distance to the vehicle in front and the set speed.

The speed and distance to the vehicle in front are set and saved using the steering wheel.

Available speed range: 20 km/h - 160 km/h

THE ADJUSTABLE SET SPEED CAN VARY DUE TO THE FOLLOWING FACTORS:

- Drive program [E] (⟶ page 303) selected
- Stored speed restriction, e.g. winter tyre limit (⟶ page 360)

ⓘ The adjustable set speed may differ if a speed limit (e.g. winter tyre limit) is stored.

OTHER FEATURES OF ACTIVE DISTANCE ASSIST DISTRONIC:

- Adjusts the driving style depending on the selected drive program
- Initiates acceleration to the stored speed if the turn signal indicator is switched on to change to the overtaking lane
- **Vehicles with Driving Assistance Package:**
  - Reacts to stationary vehicles detected in urban speed ranges (except bicycles and motorcycles)
  - Takes one-sided overtaking restrictions into account on motorways or multi-lane roads with separate carriageways (country-dependent)

ⓘ In the Active Distance Assist menu, it is possible to set the driving mode of Active Distance Assist DISTRONIC. Depending on the selected drive program, the driving behaviour is energy-saving, comfortable or dynamic (⟶ page 370).

If the vehicle is braked to a standstill by Active Distance Assist DISTRONIC on multi-lane, separate carriageways, it can automatically follow the vehicle in front when driving off again, depending on the respective vehicle equipment. If a critical situation is detected when driving off, a visual and audible warning

is issued indicating that the driver must now take control of the vehicle. The vehicle is not accelerated any further.

Observe the notes on driving systems and your responsibility; otherwise you may fail to recognise potential dangers (→ page 348).

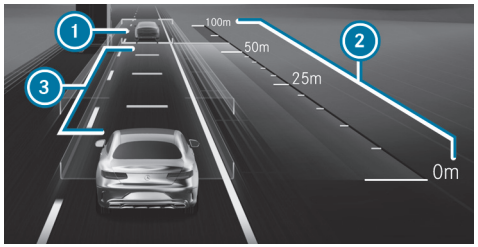

Notification on the driver display in the Assistance menu

1 Vehicle in front
2 Distance indicator
3 Set specified distance

The vehicle detected in front 1 is highlighted in green. It may also be in the lane to the right of your vehicle in situations where it is not permitted to overtake on the left, for example, on UK motorways.

PERMANENT STATUS DISPLAY

Grey: Active Distance Assist DISTRONIC selected but not yet active.

Green speedometer, grey vehicle: Active Distance Assist DISTRONIC active, speed set.

Green: Active Distance Assist DISTRONIC active and vehicle detected.

The stored speed is shown under the permanent status display and highlighted on the speedometer. Active Distance Assist DISTRONIC's status display is greyed out when in passive mode.

If the speed of the vehicle in front or the ascertained target speed due to the route event ahead is less than the stored speed, the segments on the speedometer light up.

If you increase or decrease the set specified distance 3, the display appears briefly.

ⓘ The green vehicle symbol is displayed cyclically when the vehicle is ready to pull away.

ⓘ If the accelerator pedal is depressed while Active Distance Assist DISTRONIC is operational, the system can be switched to passive mode. The suspended message appears briefly on the driver display.

SYSTEM LIMITS

THE SYSTEM MAY BE IMPAIRED OR INOPERATIVE IN THE FOLLOWING INSTANCES, FOREXAMPLE:

- In snow, rain, fog, heavy spray, if there is glare, in direct sunlight or in greatly varying light conditions.
- If the windscreen in the area of the camera is dirty, misted up, damaged or covered.
- If the radar sensors are dirty or covered.
- In multi-storey car parks or on roads with steep uphill or downhill gradients.

- If there are narrow vehicles in front, such as bicycles or motorcycles.

In addition, one or more wheels may lose grip due to braking or acceleration on smooth or slippery roads, and the vehicle may begin skidding. If ESP® intervenes, Active Distance Assist DISTRONIC is deactivated.

Do not use Active Distance Assist DISTRONIC in these situations.

You can watch an animation on this topic via the following link:

OPERATING ACTIVE DISTANCE ASSIST DISTRONIC AND THE VARIABLE LIMITER

⚠ **WARNING**
Risk of accident if detection function of Active Distance Assist DISTRONIC is impaired

ACTIVE DISTANCE ASSIST DISTRONIC DOES NOT REACT OR HAS A LIMITED REACTION:

- when driving on a different lane or when changing lanes
- to pedestrians, animals, bicycles or stationary vehicles, or unexpected obstacles
- to complex traffic conditions
- to oncoming vehicles and crossing traffic

As a result, Active Distance Assist DISTRONIC may neither give warnings nor intervene in such situations.

► Always observe the traffic conditions carefully and react accordingly.

⚠ **WARNING**
Risk of accident from acceleration or braking by Active Distance Assist DISTRONIC

ACTIVE DISTANCE ASSIST DISTRONIC MAY ACCELERATE OR BRAKE IN THE FOLLOWING CASES, FOR EXAMPLE:

- If the vehicle pulls away using Active Distance Assist DISTRONIC.
- If the stored speed is called up and is considerably faster or slower than the currently driven speed.
- If Active Distance Assist DISTRONIC no longer detects a vehicle in front or does not react to relevant objects.

► Always carefully observe the traffic conditions and be ready to brake at all times.

► Take into account the traffic situation before calling up the stored speed.

WARNING
Risk of accident due to insufficient deceleration by Active Distance Assist DISTRONIC

Active Distance Assist DISTRONIC brakes your vehicle with up to 50% of the possible deceleration. If this deceleration is not sufficient, Active Distance Assist DISTRONIC alerts you with a visual and acoustic warning.

- ► Adjust your speed and maintain a suitable distance from the vehicle in front.
- ► Brake the vehicle yourself and/or take evasive action.

WARNING
Risk of accident due to speed adaptation via Active Speed Limit Assist

The speed limit adopted by Active Speed Limit Assist may be too high or otherwise erroneous in certain circumstances:

- with speed limits below 20 km/h
- due to weather, e.g. in wet or foggy conditions

- ► Ensure that the speed driven always complies with the traffic regulations.
- ► Adjust the speed driven to the current traffic and weather conditions.

Requirements:

ACTIVE DISTANCE ASSIST DISTRONIC:

- The electric parking brake has been released.
- ESP® is switched on and is not intervening.
- Transmission position D is engaged.
- All the doors are closed.
- Check of the radar sensor system has been successfully completed.

VARIABLE LIMITER:

- The variable limiter is selected.

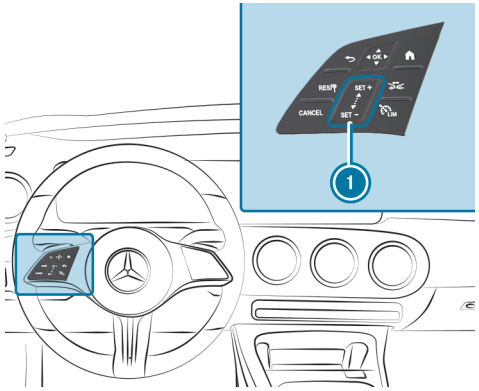

RES/	Adopts the stored/detected speed
CANCEL	Deactivates Active Distance Assist DISTRONIC/variable limiter
1 SET + SET -	Control panel to increase/decrease speed
	Increases/decreases the specified distance
LIM	Switches between the variable limiter and Active Distance Assist DISTRONIC

- **To operate Active Distance Assist DISTRONIC or the variable limiter:** press the respective button with only one finger or swipe across the control panel.

SWITCHING BETWEEN THE VARIABLE LIMITER AND ACTIVE DISTANCE ASSIST DISTRONIC

- Press LIM.

ACTIVATING ACTIVE DISTANCE ASSIST DISTRONIC/THE VARIABLE LIMITER

- **To activate without a stored speed:** press SET +, SET - or RES. **Active Distance Assist DISTRONIC:** remove your foot from the accelerator pedal.

  The current vehicle speed is stored and maintained by the vehicle via Active Distance Assist DISTRONIC or is restricted by the variable limiter.

or

- **To activate with a stored speed:** press RES. **Active Distance Assist DISTRONIC:** remove your foot from the accelerator pedal.

  The last stored speed is called up and maintained by the vehicle via Active Distance Assist DISTRONIC or is restricted by the variable limiter.

  If the stored speed has been deleted, the current vehicle speed is stored.

ⓘ When you switch off the vehicle, the stored speed is deleted. When you activate Active Distance Assist DISTRONIC, the speed stored for the variable limiter is deleted.

INCREASING/DECREASING THE SPEED

- To increase the stored speed: swipe upwards from the bottom of the control panel (1).
  - The stored speed is increased by 1 km/h.
- To decrease the stored speed: swipe downwards from the top of the control panel (1).
  - The stored speed is decreased by 1 km/h.

or

- Briefly press the top SET + or bottom SET - of the control panel (1).

  The stored speed is increased or decreased by 10 km/h.

or

- Press the top SET + or bottom SET - of the control panel (1) and hold pressed.

  The stored speed is increased or decreased in 10 km/h increments.

or

- Accelerate the vehicle to the desired speed.
- Press the top SET + of the control panel (1).

ADOPTING THE SPEED RESTRICTION SHOWN ON THE DRIVER DISPLAY

- To activate Active Distance Assist DISTRONIC or the variable limiter: press SET +, SET - or RES.
- To adopt the displayed speed restriction: press RES.

  The speed restriction shown on the driver display is adopted as the stored speed. The vehicle adapts its speed to that of the vehicle in front, but only up to the stored speed, or restricts its speed accordingly.

ⓘ A speed restriction shown on the driver display is only adopted while driving, not when stationary.

PULLING AWAY WITH ACTIVE DISTANCE ASSIST DISTRONIC

- Activate Active Distance Assist DISTRONIC and remove your foot from the brake pedal.
- Press RES.

or

- Depress the accelerator pedal briefly and firmly.

  The functions of Active Distance Assist DISTRONIC remain active.

INCREASING/DECREASING THE SPECIFIED DISTANCE TO THE VEHICLE IN FRONT

- Press the distance button.

  The display appears. The specified distance is reduced by one level.

  If the lowest level is already selected, the selection jumps to the highest level.

DEACTIVATING ACTIVE DISTANCE ASSIST DISTRONIC/VARIABLE LIMITER

⚠ **WARNING**
Risk of an accident due to Active Distance Assist DISTRONIC being active when you leave the driver's seat

If you leave the driver's seat while the vehicle is being braked by Active Distance Assist DISTRONIC only, the vehicle can roll away.

- Always deactivate Active Distance Assist DISTRONIC and secure the vehicle to prevent it from rolling away before you leave the driver's seat.

- Press CANCEL.

ⓘ If you brake, deactivate ESP® or if ESP® intervenes, Active Distance Assist DISTRONIC is deactivated. The variable limiter is not deactivated.

FUNCTION OF ACTIVE SPEED LIMIT ASSIST

⚠ **WARNING**
Risk of accident due to speed adaptation via Active Speed Limit Assist

The speed limit adopted by Active Speed Limit Assist may be too high or otherwise erroneous in certain circumstances:

- with speed limits below 20 km/h
- due to weather, e.g. in wet or foggy conditions

► Ensure that the speed driven always complies with the traffic regulations.

► Adjust the speed driven to the current traffic and weather conditions.

If a changed speed limit is detected and the automatic adoption of speed limits is switched on, this is automatically adopted as the stored speed (⟶ page 370). Speed limits below 20 km/h are not accepted.

Adjustment of travel speed is initiated no later than when the vehicle is level with the traffic sign. For signs indicating entry into an urban zone, the speed is adapted according to that permitted within the built-up area. The speed restriction indicator on the driver display is always refreshed when the vehicle is level with the traffic sign.

If you are driving on German motorways with no speed limit, the system uses the speed stored for a stretch of road with no speed limit as the set speed. If you do not alter the stored speed on a stretch of road with no speed limit, the recommended speed of 130 km/h is adopted.

If Active Distance Assist DISTRONIC has been switched to passive mode by pressing the accelerator pedal, only speed limits which are higher than the stored speed are adopted.

The maximum permissible speed does not take the road condition and current weather and traffic conditions into consideration. Adjust your speed accordingly when necessary.

Observe the notes on driving systems and your responsibility; you may otherwise fail to recognise potential dangers (⟶ page 348).

SYSTEM LIMITS

The system limits of Traffic Sign Assist apply to the detection of traffic signs (⟶ page 382).

Speed limits below 20 km/h are not automatically adopted by the system as the stored speed. Temporary speed restrictions (e.g. for a specific time or due to weather conditions) cannot be unequivocally detected by the system.

Adjust your speed in these situations.

You can watch an animation on this topic via the following link:

FUNCTION OF ROUTE-BASED SPEED ADAPTATION

WARNING
Risk of accident in spite of route-based speed adaptation

Route-based speed adaptation can malfunction or be temporarily unavailable in the following situations:

- If the driver does not follow the calculated route
- If map data is not up-to-date or available
- In the event of roadworks
- In bad weather or road conditions
- If the accelerator pedal is depressed
- In the event of electronically displayed speed limitations

► Adapt the speed to the traffic situation.

When Active Distance Assist DISTRONIC is activated, the vehicle speed will be adapted to the route events ahead. Depending on the drive program selected, the vehicle negotiates a route event ahead in an energy-saving, comfortable or dynamic manner. When the route event has been passed, the vehicle accelerates again to the stored speed. The set distance to the vehicle in front, vehicles detected ahead and speed restrictions ahead are taken into account.

Route-based speed adaptation can be activated in the multimedia system (⟶ page 370).

THE FOLLOWING ROUTE EVENTS ARE TAKEN INTO ACCOUNT:

- Bends
- Roundabouts
- T-junctions
- Turns and exits

ALSO, THE SPEED IS REDUCED IF THE TURN SIGNAL INDICATOR IS SWITCHED ON AND ONE OF THE FOLLOWING SITUATIONS IS DETECTED:

- Turning off at junctions
- Driving on slowing-down lanes
- Driving on lanes adjacent to slowing-down lanes

The driver is responsible for choosing the right speed and observing other road users. This applies in particular to junctions, roundabouts and traffic lights, as route-based speed adaptation does not brake the vehicle to a standstill.

When route guidance is active, the first speed adjustment is carried out automatically. If the turn signal indicator is switched on, the selected route is confirmed and further speed adjustment is activated.

SPEED ADJUSTMENT IS CANCELLED IN THE FOLLOWING CASES:

- If the turn signal indicator is switched off before the route event and it is presumed that the route event is not deemed relevant for the driver.
- If the driver depresses the accelerator or brake pedal during the process.

SYSTEM LIMITS
Route-based speed adaptation does not take right of way regulations into account. The driver is responsible for complying with road traffic regulations and driving at a suitable speed.

IN DIFFICULT CONDITIONS, THE SPEED SELECTION MADE BY THE SYSTEM MAY NOT ALWAYS BE SUITABLE. THIS APPLIES TO THE FOLLOWING SITUATIONS, FOREXAMPLE:

- The road's course is not clearly visible

- Road narrowing
- Varying maximum permissible speeds in individual lanes, forexample, at toll stations
- Wet road surfaces, snow or ice
- If transport equipment, e.g. a trailer or bicycle rack, is attached to the trailer hitch and the electrical connection has been correctly established.

In these situations the driver must intervene accordingly.

SETTING THE DRIVING STYLE FOR ACTIVE DISTANCE ASSIST DISTRONIC

Requirements:

- Active Distance Assist DISTRONIC is activated.

Multimedia system:

Settings » Assistance » Driving » Active Distance Assist

SELECTING A DRIVING STYLE

► Select Based on DYNAMIC SELECT, Dynamic or Comfortable.

ⓘ Additional information on Active Distance Assist DISTRONIC (⟶ page 361).

SETTING SPEED ADJUSTMENT

► Select Adopt speed limit or Route-based speed adjustment.

When these functions are active, the travel speed is adjusted depending on the route events ahead or in accordance with a speed restriction.

ⓘ **IF ONE OF THE FOLLOWING SYSTEMS IS ACTIVATED, THE DETECTED SPEED CAN BE MANUALLY ADOPTED AS THE MAXIMUM PERMISSIBLE SPEED:**

- Active Distance Assist DISTRONIC
- Variable limiter

ⓘ Additional information on speed adjustment (⟶ page 369).

Active Steering Assist

FUNCTION OF ACTIVE STEERING ASSIST

⚠ **WARNING**
Risk of accident if Active Steering Assist unexpectedly stops functioning

If the system limits of Active Steering Assist are reached there is no guarantee that the system will remain active or will keep the vehicle in lane.

► Always keep your hands on the steering wheel and observe the traffic carefully.

► Always steer the vehicle paying attention to traffic conditions.

WARNING
Risk of accident if Active Steering Assist unexpectedly intervenes

The detection of lane markings and objects may malfunction and cause unexpected steering interventions.

- Steer according to traffic conditions.

Active Steering Assist is available up to a speed of 160 km/h.

The system helps you to stay in the centre of the lane by means of moderate steering interventions. Depending on the vehicle speed, Active Steering Assist uses the vehicles ahead and lane markings as a reference.

Depending on the respective country of use, Active Steering Assist can use the surrounding traffic as a reference in the lower speed range. If necessary, Active Steering Assist can also assist when driving outside the centre of the lane, forexample, to form an emergency corridor.

If the detection of lane markings and vehicles ahead is impaired, Active Steering Assist switches to passive mode. The system provides no support in this case.

STATUS DISPLAY OF ACTIVE STEERING ASSIST

Grey: activated and in passive mode

Green: activated and active

Red, flashing: prompt to the driver to actively confirm or transition from active to passive mode, system limits detected

White, red hands: "hands on the steering wheel" prompt

During the transition from active mode to passive mode, the symbol is shown as enlarged and flashing. Once the system is in passive mode, the symbol is shown as grey on the driver display.

Depending on the selected vehicle settings, Active Steering Assist may be unavailable.

STEERING AND TOUCH DETECTION

The driver is required to keep their hands on the steering wheel at all times to ensure that they can intervene at any time to correct the course of the vehicle and keep it in lane. The driver must anticipate a change from active mode to passive mode or vice versa at any time.

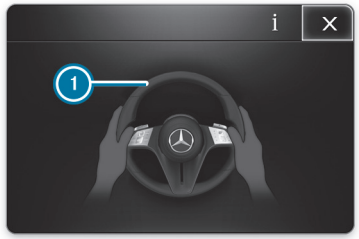

If the system detects that the driver has not steered the vehicle for a considerable period of time or has removed their hands from the steering wheel, an initial visual warning is issued. The notification (1) appears on the driver display. If the driver still does not steer the vehicle, or gives no confirmation to the system, a repetitive warning tone sounds in addition to the visual warning message.

If the driver does not react to this warning for a considerable period, an emergency stop may be initiated (→ page 373).

The warning is not issued or stops as soon as the system detects the driver touching or steering the steering wheel.

The touch detection may be limited or inoperative if there is no direct contact between the hand and the steering wheel, e.g. when wearing gloves or if there is a steering wheel cover on the steering wheel.

If Active Steering Assist detects that a system limit has been reached, a visual warning is issued and a warning tone sounds.

Observe the notes on driving systems and your responsibility; otherwise you may fail to recognise potential dangers (⟶ page 348).

SYSTEM LIMITS

Active Steering Assist has a limited steering torque for lateral guidance. In some cases, the steering intervention is not sufficient to keep the vehicle in the lane or to drive through exits.

THE SYSTEM MAY BE IMPAIRED OR INOPERATIVE IN THE FOLLOWING SITUATIONS:

- There is poor visibility, e.g. due to snow, rain, fog, heavy spray, greatly varying light conditions or dense shadows on the carriageway.
- There is glare, e.g. from oncoming traffic, direct sunlight or reflections.
- If there is insufficient road illumination.
- The windscreen is dirty, misted up, damaged or covered in the vicinity of the camera, e.g. by a sticker.
- If there are no lane markings in a given lane, or the markings are not easily discernible or change quickly, forexample, in a construction area or at junctions.
- If the lane markings are worn away, dark or covered up, e.g. by dirt or snow.
- If the distance to the vehicle in front is too short and the lane markings can therefore not be detected.
- If the roadway is narrow and winding.
- If there are obstacles on the lane or projecting out into the lane, suchas object markers.
- If transport equipment, e.g. a trailer or bicycle rack, is attached to the trailer hitch and the electrical connection has been correctly established.

THE SYSTEM DOES NOT PROVIDE ASSISTANCE IN THE FOLLOWING CONDITIONS:

- in very tight bends and when turning
- when crossing junctions
- at roundabouts or toll stations
- when actively changing lane without switching on the turn signal indicator
- when the tyre pressure is too low

You can watch an animation on this topic via the following link:

ACTIVATING/DEACTIVATING ACTIVE STEERING ASSIST

Requirements:

- ESP® is activated, but is not intervening.
- Active Distance Assist DISTRONIC is activated.

Multimedia system:

⟶ ⌂ ⏩ Settings ⏩ Assistance ⏩ Driving

▶ Activate or deactivate Active Steering Assist.

Function of Active Emergency Stop Assist

The following function is only available in combination with the Driving Assistance Package.

Active Emergency Stop Assist monitors the steering wheel, as well as the accelerator and brake pedals. If the system detects a lack of driver activity or the vehicle is in danger of leaving the lane, a warning may be issued and an emergency stop initiated.

If Active Steering Assist is switched off, the system is available from a speed of approx. 60 km/h.

IF THE VEHICLE IS IN DANGER OF LEAVING THE LANE, A WARNING IS ISSUED IN THE FOLLOWING INSTANCES.

- The driver has not touched the steering wheel for a while, or no steering movement is detected for a while (depending on the respective vehicle equipment).
- Neither the accelerator pedal nor the brake pedal is depressed.

If Active Steering Assist is switched on and active, the system only monitors the steering wheel. If the driver has not touched the steering wheel for a certain period of time, a warning may be issued despite pedal actuation.
Also observe the notes on touch detection of Active Steering Assist (⟶ page 370).

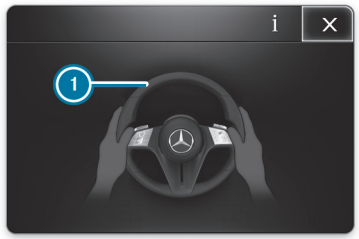

ACTIVE EMERGENCY STOP ASSIST ISSUES THE FOLLOWING WARNINGS IN SUCCESSION:

- The notification (1) appears on the driver display.
- In addition to the notification (1), a warning tone sounds.
- The Emergency stop initiated To cancel: operate steering wheel and a pedal message appears on the driver display, a continuous warning tone sounds and the vehicle will no longer accelerate.
- The vehicle speed is reduced in increments until the vehicle comes to a standstill. This generates jerky braking impulses.

When automatic braking is initiated, Active Distance Assist DISTRONIC is deactivated. Depending on the respective country of use, the hazard warning light system is also switched on.

WHEN THE VEHICLE HAS SLOWED TO A STANDSTILL:

- the vehicle is secured with the electric parking brake.
- the vehicle is unlocked.
- if possible, an emergency call is made to the Mercedes-Benz emergency call centre.

Before the Emergency stop initiated To cancel: operate steering wheel and a pedal message is displayed, you can cancel Active Emergency Stop Assist by turning the steering wheel.

ONCE THE EMERGENCY STOP INITIATED TO CANCEL: OPERATE STEERING WHEEL AND A PEDAL **MESSAGE HAS BEEN DISPLAYED, YOU CAN CANCEL ACTIVE EMERGENCY STOP ASSIST AS FOLLOWS:**

- Accelerating or braking: braking is cancelled, but the warning message, warning tone and electric power steering remain active.
- Steering: electric power steering is cancelled, the warning message and warning tone remain active and the vehicle continues to be braked.
- Steering and accelerating or braking: The emergency stop and electric power steering are cancelled. The warning message and the warning tone are cancelled.

ⓘ Active Emergency Stop Assist can initiate an emergency stop a maximum of three times within a driving cycle. After that, Active Steering Assist and Active Emergency Stop Assist are disabled until the vehicle has been restarted.

SYSTEM LIMITS

FOR THE DETECTION OF VEHICLES AND OTHER OBSTACLES, OBSERVE THE SYSTEM LIMITS OF THE FOLLOWING FUNCTIONS:

- Active Distance Assist DISTRONIC (⟶ page 361)
- Active Steering Assist (⟶ page 370)
- Active Lane Keeping Assist (⟶ page 389)
- Active Brake Assist (⟶ page 374)

ACTIVE EMERGENCY STOP ASSIST IS INACTIVE IN THE FOLLOWING CASE:

- Active Lane Keeping Assist and Active Steering Assist are switched off.

Active Brake Assist

FUNCTION OF ACTIVE BRAKE ASSIST

ACTIVE BRAKE ASSIST CONSISTS OF THE FOLLOWING FUNCTIONS:

- Distance warning function
- Collision warning
- Autonomous braking function
- Situation-based brake force boosting
- **Vehicles Driving Assistance Package:** Evasive Steering Assist

Active Brake Assist can help you to minimise the risk of a collision with vehicles, cyclists or pedestrians, or to reduce the effects of such a collision.

If Active Brake Assist has detected a risk of collision, a warning tone sounds and the Active Brake Assist warning lamp lights up.

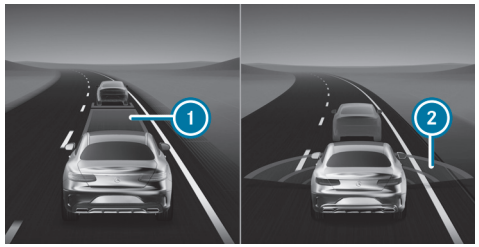

Notification on the driver display in the menu Assistance

① Distance insufficient
② Red radar waves

In the Assistance menu, an insufficient distance to the vehicle in front ① is displayed in red. If you further reduce the distance, the vehicle in front is also highlighted in red. When the system detects a risk of collision, red radar waves ② appear ahead of the vehicle.

Vehicles with PRE-SAFE®: depending on the country, an additional haptic warning is given in the form of slight, repeated seat belt tensioning on the driver's side.

If you do not react to the warning, autonomous braking can be initiated in critical situations.

In particularly critical situations, Active Brake Assist can also initiate autonomous braking directly. In this case, the warning tone and the distance warning lamp are simultaneous with the braking action.

If you apply the brakes yourself in a critical situation or apply the brakes during autonomous braking, situation-based braking assistance is given. The brake pressure increases up to maximum emergency braking if necessary.

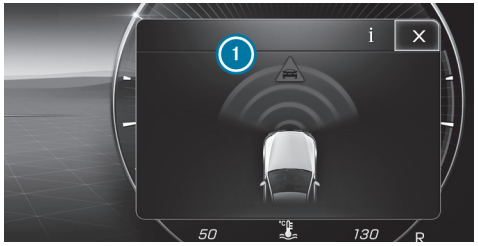

If autonomous braking, situation-related based assistance or evasive action has occurred, pop-up (1) appears on the driver display. It automatically disappears after a short time.

If the autonomous braking function or the situation-based braking assistance is triggered, additional preventive measures for occupant protection by PRE-SAFE® may also be initiated.

WARNING
Risk of an accident caused by limited detection performance of Active Brake Assist

Active Brake Assist cannot always clearly identify objects and complex traffic situations.

IN SUCH CASES, ACTIVE BRAKE ASSIST MIGHT:

- Give a warning or brake without reason
- Not give a warning or not brake

Active Brake Assist is only an aid. The driver is responsible for maintaining a sufficiently safe distance to the vehicle in front, vehicle speed and for braking in good time.

- ► Always pay careful attention to the traffic situation; do not rely on Active Brake Assist alone.
- ► Be prepared to brake or swerve if necessary.

If Active Brake Assist is deactivated or the functions are restricted, e.g. owing to activation of another driving system, the OFF Active Brake Assist warning lamp appears in the driver display.

If the system is unavailable due to soiled or damaged sensors or a fault, or if the functions are restricted, the Active Brake Assist warning lamp appears on the driver display.

Also observe the system limits of Active Brake Assist.

DISTANCE WARNING FUNCTION
From approximately 30 km/h, you are warned by the distance warning function if the safety distance to the vehicle travelling ahead is insufficient at the cur-

rent speed for several seconds. In this case, the distance warning lamp in the driver display lights up. If the distance to the vehicle in front continues to decrease at higher speeds, the distance warning lamp begins to flash.

COLLISION WARNING

THE COLLISION WARNING CAN ASSIST YOU IN THE FOLLOWING SITUATIONS WITH AN INTERMITTENT WARNING TONE AND THE WARNING LAMP:

- at speeds up to approximately 250 km/h when approaching moving vehicles ahead.
- at speeds up to approximately 80 km/h when approaching stationary vehicles, pedestrians walking along the road and moving cyclists ahead.
- at speeds up to approximately 70 km/h when approaching crossing pedestrians and cyclists.
- at speeds up to approximately 60 km/h when approaching stationary pedestrians and cyclists.

AUTONOMOUS BRAKING FUNCTION

AT SPEEDS ABOVE APPROXIMATELY 7 KM/H, THE AUTONOMOUS BRAKING FUNCTION CAN INTERVENE IN THE FOLLOWING SITUATIONS:

- at speeds up to approximately 250 km/h when approaching moving vehicles ahead.
- at speeds up to approximately 80 km/h when approaching moving cyclists ahead, pedestrians walking along the road and stationary vehicles.
- at speeds up to approximately 70 km/h when approaching crossing pedestrians and cyclists.

SITUATION-BASED BRAKE FORCE BOOSTING

AT SPEEDS ABOVE APPROXIMATELY 7 KM/H, SITUATION-RELATED BRAKE FORCE BOOSTING CAN INTERVENE IN THE FOLLOWING SITUATIONS.

- at speeds up to approximately 250 km/h when approaching moving vehicles ahead.
- at speeds up to approximately 80 km/h when approaching moving cyclists ahead, pedestrians walking along the road and stationary vehicles.
- at speeds up to approximately 70 km/h when approaching crossing pedestrians and cyclists.
- at speeds up to approximately 60 km/h when approaching stationary pedestrians and cyclists.

CANCELLING A BRAKING INTERVENTION BY ACTIVE BRAKE ASSIST

YOU CAN CANCEL A BRAKE APPLICATION OF ACTIVE BRAKE ASSIST AT ANY TIME BY:

- firmly depressing the accelerator pedal or by kickdown
- releasing the brake pedal.

ACTIVE BRAKE ASSIST MAY CANCEL THE BRAKING INTERVENTION WHEN ONE OF THE FOLLOWING CONDITIONS IS FULFILLED:

- You steer to avoid an obstacle.
- there is no longer a risk of collision
- An obstacle is no longer detected in front of your vehicle.

TURNING MANOEUVRE FUNCTION (VEHICLES WITH DRIVING ASSISTANCE PACKAGE):
If the system detects a risk of a collision with an oncoming vehicle when turning across an oncoming lane, autonomous braking can be initiated at speeds below 15 km/h before you have left your own lane.

ACTIVE EVASIVE STEERING ASSIST

⚠ **WARNING**
Risk of accident despite Active Evasive Steering Assist

Active Evasive Steering Assist cannot always clearly identify objects and complex traffic situations.

IN SUCH CASES, ACTIVE EVASIVE STEERING ASSIST MIGHT:

- issue an unfounded warning or initiate a steering intervention
- not issue a warning or not initiate a steering intervention.

The Active Evasive Steering Assist can provide support in preventing a collision via an automatically initiated steering intervention.

► Always pay careful attention to the traffic situation; do not rely on Active Evasive Steering Assist alone.

► Be prepared to brake or swerve if necessary.

► Drive with adjusted speed if pedestrians are in the area surrounding the road.

Active Evasive Steering Assist can automatically react to objects that are stationary or moving longitudinally in your lane.

ACTIVE EVASIVE STEERING ASSIST HAS THE FOLLOWING FEATURES:

- Detection of pedestrians, cyclists and vehicles.
- Assistance through autonomous steering intervention during a necessary evasive manoeuvre
- Autonomous activation if there is sufficient space in your own lane
- Reaction from a speed of approximately 30 km/h up to a speed of approximately 80 km/h.

When Active Evasive Steering Assist is intervening, and for the duration of the evasive action, a warning tone is sounded and the  distance warning lamp flashes.

The steering assistance by Active Evasive Steering Assist can be cancelled at any time by steering, accelerating or braking.

ACTIVE EVASIVE STEERING ASSIST CAN INTERVENE IN THE FOLLOWING SPEED RANGES:

- when approaching stationary vehicles, pedestrians or cyclists at speeds from approximately 30 km/h to approximately 80 km/h
- when approaching pedestrians or cyclists moving longitudinally ahead at speeds from approximately 30 km/h to approximately 80 km/h

SYSTEM LIMITS
Full system performance is not yet available for a short time after switching on the vehicle or after driving off. Depending on the environmental conditions, it may take a few minutes before full system performance is available.

THE SYSTEM MAY BE IMPAIRED OR MAY NOT FUNCTION, PARTICULARLY IN THE FOLLOWING SITUATIONS:

- In snow, rain, fog, heavy spray, glare, in direct sunlight or in varying light conditions.

- if the sensors are soiled, misted up, damaged or covered.
- If the sensors are impaired due to interference from other radar sources, e.g. strong radar reflections in multi-storey car parks.
- If a loss of tyre pressure or a defective tyre has been detected and displayed.
- In complex traffic situations where objects cannot always be clearly identified.
- if pedestrians or vehicles move quickly into the sensor detection range.
- if pedestrians are hidden by other objects.
- if the typical outline of a pedestrian cannot be distinguished from the background.
- if a pedestrian is not detected as such, e.g. owing to special clothing or other objects.
- On bends with a tight radius.
- If the driver's seat belt is not fastened.
- if there is no lane marking, or it is not clearly recognisable
- if the course of the road is nowhere near straight
- when a trailer or bicycle rack is attached

You can watch an animation on this topic via the following link:

SETTING ACTIVE BRAKE ASSIST

Requirements:

- The vehicle is switched on.

Multimedia system:

Settings » Assistance » Collision avoidance

► Activate or deactivate the function.

ⓘ It is recommended that you always leave Active Brake Assist activated.

Switching off Active Brake Assist also switches off the distance warning function, the collision warning, the autonomous braking function and Active Evasive Steering Assist (with Driving Assistance Package – country-dependent).

ⓘ If Active Brake Assist is deactivated, the OFF symbol appears in the status bar of the driver display and when the vehicle is next started the system is activated again.

ⓘ The setting after starting the vehicle depends on the country.

SETTING THE WARNING TIME

► Select ⚙ alongside Active Brake Assist.

► Select Early, Medium or Late.

ⓘ If the ATTENTION ASSIST has detected signs of fatigue or a microsleep, depending on the country, the system can issue a warning earlier than set. Further information about ATTENTION ASSIST (⟶ page 356).

Speed Limit Assist

FUNCTION OF SPEED LIMIT ASSIST

ⓘ This function is an on-demand feature (⟶ page 94).

ⓘ Speed Limit Assist uses Open Street Map data provided under the Open Database Licence (ODbL) terms. For more information, see: https://www.osmfoundation.org/wiki/licence.

Speed Limit Assist records speed restrictions with a multifunction camera and shows them in the driver display.

Optionally, maximum permissible speeds can also be shown in the head-up display.

The camera also detects further speed restrictions indicated by an additional sign (e.g. in wet conditions).

THE FOLLOWING SHOULD BE OBSERVED WHEN USING SPEED LIMIT ASSIST:

- Select a speed adapted to the traffic, surroundings and weather conditions.
- Observe actual traffic signs.
- Observe applicable traffic rules and regulations.

Observe the notes on driving systems and your responsibility; you may otherwise fail to recognise potential dangers (⟶ page 348).

NOTIFICATIONS ON THE DRIVER DISPLAY

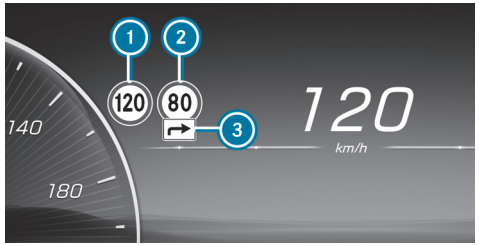

Example

1. Permissible speed
2. Permissible speed when there is a restriction
3. Additional sign with restriction

ⓘ Traffic signs that affect the maximum permissible speed, e.g. indicating the beginning or end of motorways, can also be detected.

The system can show up to two traffic signs on the driver display simultaneously. The system always prioritises displaying speed restrictions. The head-up display shows only one traffic sign with a maximum permissible speed. If two speed signs are shown on the driver display, forexample, when speed limits are detected, the value of the left-hand speed restriction (1) is always transmitted to the limiter, cruise control or Active Distance Assist DISTRONIC for acceptance and is shown on the head-up display.

Important information from other systems can cause traffic signs to be hidden for a short time.

If Speed Limit Assist cannot determine the current maximum permissible speed, e.g. due to a lack of signage, the following display appears on the driver display:

This display is shown permanently in the vehicle when travelling in countries which do not support Speed Limit Assist. Speed Limit Assist is not available in all countries.

If the system is temporarily or permanently unavailable due to a technical fault or soiling of the windscreen, a corresponding display message appears on the driver display. Depending on the respective country of use, the Speed Limit Assist warning lamp also lights up on the driver display.

Please also note the information on the display messages (⟶ page 750).

WARNING WHEN THE MAXIMUM PERMISSIBLE SPEED IS EXCEEDED

The system can warn you if you are about to exceed the maximum permissible speed. Depending on the respective country of use, you can set how much the maximum permissible speed may be exceeded in the multimedia system before a warning is issued. You can select in the settings whether the warning should be issued visually, with the traffic sign flashing in the driver display, or as a combination of visual and acoustic warning. Selection of the type of warning is confirmed via a notification on the driver display, depending on the respective country of use.

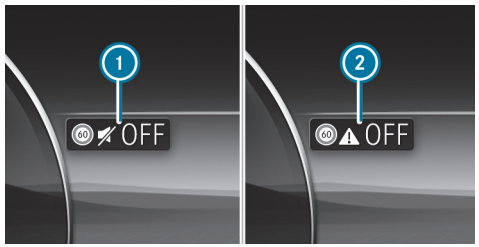

Example

1. Visual warning only
2. Warning off

The type, duration and activation threshold of the speed limit warning, as well as the option of setting the timing of the activation threshold upon which the warning is issued, are subject to legislation valid for the respective country in which the vehicle is delivered.

NOTES ON TRAILER OPERATION

Observe also the notes on trailer operation (⟶ page 412).

If a trailer or bicycle rack is connected correctly, the central display shows the query about the type of trailer and its maximum permissible speed (⟶ page 417).

The driver is solely responsible for ensuring that the maximum permissible speed is adapted manually in the Trailer type category.

IN PARTICULAR, THE COUNTRY-SPECIFIC LAWS MUST BE TAKEN INTO ACCOUNT, E.G. ON:

- maximum design speed or speed restriction for which the vehicle is approved
- permissible gross mass with or without towing vehicle
- required number of years with a corresponding driving licence
- type and condition of the road used
- the weather conditions

The maximum permissible speed adapted to the vehicle/trailer combination can be transferred to the manual or automatic speed transfer during the journey (depending on the respective equipment).

On the system side, relevant additional signs for speed restrictions and clear road category traffic rules can be considered for the vehicle combination (depending on the respective country of use).

No maximum permissible speed can be selected for a bicycle rack in the multimedia system. When using a bicycle rack, observe the specifications for the maximum permissible speed in the Owner's Manual.

SYSTEM LIMITS

THE SYSTEM MAY BE IMPAIRED OR INOPERATIVE IN THE FOLLOWING SITUATIONS IN PARTICULAR:

- If visibility is poor, e.g. due to insufficient illumination of the road, highly variable shade conditions, rain, snow, fog, swirling dust or heavy spray.
- If there is glare, e.g. from oncoming traffic, direct sunlight or reflections
- Soiling of the windscreen in the vicinity of the multifunction camera, or if the camera is misted up, damaged or obscured.
- If the traffic signs are difficult to see because, forexample, they are dirty, obscured, faded, iced over, damaged, inconveniently positioned, insufficiently illuminated or askew.
- Active traffic signs with LED displays may not be detected correctly, or even at all due to technical factors suchas transmission frequency.
- If the signs, road markings or road layout are ambiguous, e.g. traffic signs at road works, at exits and slip roads, adjacent lanes or parallel roads, and pedestrian crossing markings at traffic lights.
- If the signage or road markings do not comply with the standard.
- If the signage, road markings or road guidance is country-specific and deviates from the navigation system's route guidance, e.g. at or after road works.
- After sharp turns and in tight bends, if traffic signs are outside the camera's field of vision.
- If you overtake vehicles with traffic signs affixed or attached to them.
- If transport devices are used that are attached to the trailer coupling, e.g. bicycle racks, the system may react to restrictions for trailers.

SETTING SPEED LIMIT ASSIST

Multimedia system:

Settings » Assistance » Assistance » Speed Limit Assist

ACTIVATING OR DEACTIVATING THE SPEED WARNING

ⓘ The speed warning is switched on by default (depending on the country of use).

► Switch off Speed limit warning .

In accordance with country-specific legislation, the speed warning remains deactivated until the next time the vehicle is switched on or off.

ⓘ The acoustic speed limit warning can also be switched off and on via quick-access, by pressing and holding the mute button on the steering wheel, by pressing the speed icon in the status line of the media display or via a voice control command (availability of these functions is country-dependent).

CHANGING THE TYPE OF SPEED WARNING

► Change the warning to Visual or Visual & audible.

SWITCHING THE ACOUSTIC SIGNAL FOR A NEW MAXIMUM PERMISSIBLE SPEED ON OR OFF

ⓘ The acoustic signal for a new maximum permissible speed is switched off at the factory.

The function determines whether a subtle, non-intrusive sound supports each change of the displayed speed on the driver display.

► Activate or deactivate the function.

ⓘ Availability of the function is dependent on the respective country of use.

SETTING THE WARNING THRESHOLD

This value determines the speed at which the warning is issued.

► Set the desired speed under Warning Threshold.

Availability of the function is subject to country-specific legislation.

IF ONE OF THE FOLLOWING SYSTEMS IS ACTIVATED, THE DETECTED SPEED CAN BE MANUALLY ADOPTED AS THE MAXIMUM PERMISSIBLE SPEED:

- Active Distance Assist DISTRONIC
- Cruise control
- Variable limiter

ⓘ Additional information on Active Distance Assist DISTRONIC (⟶ page 364).

Traffic Sign Assist

FUNCTION OF TRAFFIC SIGN ASSIST

ⓘ This function can be a Digital Extra (⟶ page 94).

Traffic Sign Assist detects the traffic signs with the multifunction camera and compares them with the information from the digital road map of the navigation system. It supports you by showing detected speed limits and no-overtaking zones on the driver display.

Speed limits can also be shown on the head-up display.

The system can issue a warning when you exceed the maximum permissible speed.

In some countries, the system can provide you with additional functions and can warn you when you are approaching pedestrian crossings. If the system detects that you are driving onto a section of road in the wrong direction of travel, it issues a warning.

The camera also detects and evaluates traffic signs with a restriction indicated by an additional sign (e.g. in wet conditions).

Traffic Sign Assist only shows selected signs on the driver display. Actual traffic signs and speed limits are always prioritised over traffic signs and speed limits shown on the driver display.

THE FOLLOWING SHOULD ALSO BE OBSERVED WHEN USING TRAFFIC SIGN ASSIST:

- Select a speed suitable for the traffic, surroundings and weather conditions.
- Observe actual traffic signs.
- Observe applicable traffic rules and regulations.

Observe the notes on driving systems and your responsibility; otherwise you may fail to recognise potential dangers (⟶ page 348).

NOTIFICATIONS ON THE DRIVER DISPLAY

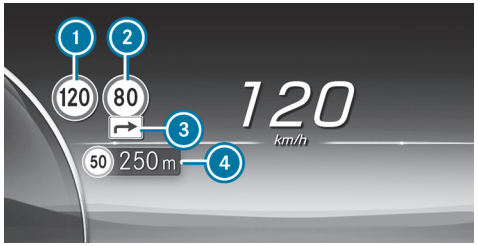

Example

1. Permissible speed
2. Permissible speed when there is a restriction
3. Additional sign with restriction
4. Speed limits up ahead

Speed limits are always shown as a priority over other traffic signs, such as no-overtaking zones, forexample. The head-up display only shows one traffic sign with a speed limit. If two speed signs are shown on the driver display, forexample when speed limits are detected, the value of the left-hand speed limit 1 is always transmitted to the limiter, cruise control or to Active Distance Assist DISTRONIC for acceptance and is shown on the head-up display.

Important information from other systems can cause traffic signs to be hidden for a short time.

DEPENDING ON THE RESPECTIVE COUNTRY OF USE, TRAFFIC SIGN ASSIST CAN DETECT AND DISPLAY THE FOLLOWING TRAFFIC SIGNS, FOR EXAMPLE:

- speed limits
- end of the speed limit
- overtaking restrictions
- residential streets
- signs showing the start or end of motorways and dual carriageways

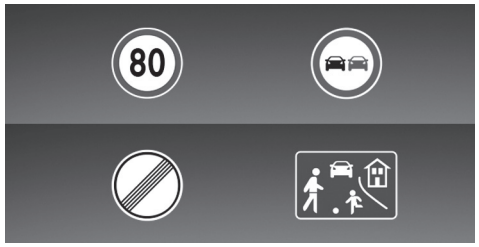

Detected traffic signs (examples)

TRAFFIC SIGN ASSIST CAN ALSO DETECT THE FOLLOWING ADDITIONAL SIGNS (3), FOR EXAMPLE, AND EVALUATE THE RELEVANCE OF THE RESTRICTIONS WHERE NECESSARY USING AUXILIARY VEHICLE SENSORS:

- in wet conditions
- slippery road surfaces
- in fog
- temporary restrictions
- exits
- restrictions for vehicle/trailer combinations

Traffic Sign Assist also uses data from the digital road map of the navigation system. When you leave or enter a municipality or change roads, on a motorway exit or slip road forexample, or after you turn at a junction, the display on the driver display can thus be updated without a traffic sign having been detected.

ⓘ Regularly update the digital road map of the navigation system to ensure optimum functioning of Traffic Sign Assist (⟶ page 36).

Depending on the respective vehicle equipment and country of use, the system may also display upcoming speed restrictions on the driver display and head-up display. The driver display may also show the distance to an upcoming lower speed limit. Information from the digital road map of the navigation system is used for this purpose. The Assistance menu can also display a dynamic visualisation of the speed limits ahead.

If Traffic Sign Assist cannot determine the current maximum permissible speed, e.g. due to a lack of signage, the notification [⊖] appears on the driver display.

Traffic Sign Assist is not available in all countries. This display [⊖] is shown permanently in the vehicle when travelling in countries which do not support Traffic Sign Assist.

If the system is temporarily or permanently unavailable due to a technical fault or because the windscreen is dirty, a corresponding display message appears on the driver display. The Traffic Sign Assist warning lamp [OFF] also lights up on the driver display in certain countries.

ⓘ Please also note the information on the display messages from Traffic Sign Assist (⟶ page 750).

WARNING WHEN THE MAXIMUM PERMISSIBLE SPEED IS EXCEEDED

The system can warn you if you are about to exceed the maximum permissible speed. Depending on the respective country of use, you can set the extent to which the maximum permissible speed may be exceeded in the multimedia system before a warning is issued. You can switch off the warning, or select in the settings whether the warning should be issued visually, with the traffic sign flashing on the driver display, or as a combination of a visual and audible warning. Selection of the type of warning is confirmed via a notification on the driver display, depending on the respective country of use.

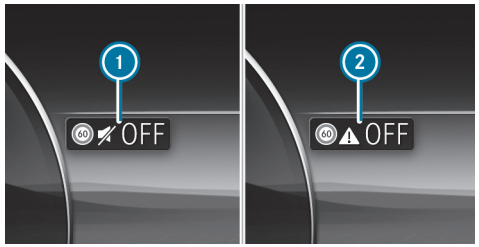

Example

(1) Visual warning only
(2) Warning off

The type, duration and deployment stages of the speed warning, as well as the option to set the timing of the deployment stages upon which the warning is issued, are subject to legislation valid for the respective country in which the vehicle is delivered.

ADDITIONAL WARNING FUNCTIONS

Warning for no-entry signs: Traffic Sign Assist can warn you if you drive down a section of road in the wrong direction of travel, forexample, on motorway slip roads or one-way streets.

Warning at pedestrian crossings: if you approach pedestrian crossings, provided that pedestrians are in the danger zone or are moving towards it, Traffic Sign Assist can warn you up to a speed of approximately 70 km/h.

TRAILER OPERATION

Refer to the chapter on the trailer hitch (⟶ page 412).

If a trailer or bicycle rack is connected correctly, the central display shows the query regarding the type of trailer and its maximum permissible speed (⟶ page 417).

The driver is solely responsible for ensuring that the maximum permissible speed is adapted manually in the Trailer type category.

IN PARTICULAR, COUNTRY-SPECIFIC LAWS MUST BE TAKEN INTO ACCOUNT, E.G. ON:

- maximum design speed or maximum permissible speed
- permissible gross mass with or without towing vehicle
- required number of years with a corresponding driving licence
- type and condition of the road used
- the weather conditions

The maximum permissible speed adapted to the vehicle/trailer combination can be transferred to the manual or automatic speed control during the journey (depending on the respective equipment).

The system can take into account additional signs for the vehicle combination regarding speed limits and clear road traffic rules (country-dependent).

No maximum permissible speed can be selected for a bicycle rack in the multimedia system. When using a bicycle rack, observe the specifications for the maximum permissible speed in the Owner's Manual.

SYSTEM LIMITS

THE SYSTEM MAY BE IMPAIRED OR INOPERATIVE IN THE FOLLOWING SITUATIONS IN PARTICULAR:

- If visibility is poor, e.g. due to insufficient illumination of the road, highly variable shade conditions, rain, snow, fog, swirling dust or heavy spray.
- If there is glare, e.g. from oncoming traffic, direct sunlight or reflections.
- If there is soiling on the windscreen in the vicinity of the multifunction camera, or if the camera is misted up, damaged or obscured.
- If the traffic signs are difficult to see because, forexample, they are dirty, obscured, faded, iced over, damaged, inconveniently positioned, insufficiently illuminated or askew.
- Active traffic signs with LED displays may not be detected correctly, or even at all due to technical factors, suchas transmission frequency.
- If the information on the navigation system's digital road map is incorrect, incomplete or out of date.
- If the signs, road markings or road layout are ambiguous, e.g. traffic signs at roadworks, at exits and slip roads, adjacent lanes or parallel roads, and pedestrian crossing markings at traffic lights.

- If the signage or road markings do not comply with the standard.
- If the signage, road markings or road layout are country-specific and deviate from the navigation system's route guidance, e.g. at or after roadworks.
- After sharp turns and in tight bends, if traffic signs are outside the camera's field of vision.
- If you overtake vehicles with traffic signs affixed or attached to them.

SETTING TRAFFIC SIGN ASSIST

Multimedia system:

Settings » Assistance » Assistance » Traffic Sign Assist

ACTIVATING OR DEACTIVATING THE SPEED LIMIT WARNING

ⓘ The speed limit warning is switched on by default (depending on the respective country).

► Switch off Speed limit warning .

Following country-specific legislation, the speed limit warning remains deactivated until the next time the vehicle is switched on or off.

ⓘ The audible speed limit warning can also be switched off and on via quick-access, by pressing and holding the mute button on the steering wheel, by pressing the speed icon in the status line of the media display or via a voice control command (availability of these functions is country-dependent).

CHANGE THE TYPE OF SPEED LIMIT WARNING

► Change the warning to Visual or Visual & audible.

SETTING THE WARNING THRESHOLD

This value determines the speed at which a warning is issued when exceeded.

► Set the desired speed under Warning Threshold.

ⓘ Availability of the function is subject to country-specific legislation.

SWITCHING THE ACOUSTIC SIGNAL FOR A NEW MAXIMUM PERMISSIBLE SPEED ON OR OFF

ⓘ The acoustic signal for a new maximum permissible speed is switched off at the factory.

The function determines whether a subtle, non-intrusive sound supports each change of the displayed speed in the driver display.

► Activate or deactivate the function.

ⓘ Availability of the function is dependent on the respective country.

Traffic light view

INFORMATION ABOUT THE TRAFFIC LIGHT VIEW

The traffic light view supports the driver when waiting in front of a red light by displaying the camera image on the central display. The camera image is displayed when the driver is the first vehicle in front of the red light and faded out when the vehicle drives off.

DISPLAYING TRAFFIC LIGHT VIEW

Requirements:

- The Traffic light view option is switched on.
- A traffic light view is available.

Multimedia system:

Settings Assistance Assistance Traffic light view

This function is not available in all countries.

If the vehicle is in first position at a traffic light, the camera image with traffic light view is shown on the central display.

When the vehicle pulls away, the camera image is faded out.

► Activate or deactivate Traffic light view.

USING OTHER AVAILABLE FUNCTIONS

► Select .

► Select On request or Automatic.

If On request is set and a traffic light view is available, the Please tap here for traffic light view. message is displayed. The camera image is shown after confirmation of the message.

When Automatic is set, the camera image is automatically displayed when the traffic light view is available.

Blind Spot Assist

FUNCTION OF BLIND SPOT ASSIST WITH EXIT WARNING

Blind Spot Assist uses two lateral, rear-facing radar sensors to monitor the area up to 40 m behind and 3 m next to your vehicle.

If at speeds above approximately 12 km/h a vehicle is detected and this vehicle subsequently enters the monitoring range directly next to your vehicle, the warning lamp in the outside mirror lights up red.

STATUS DISPLAY ON THE DRIVER DISPLAY

Grey: the system is activated but inoperative.

Green: the system is activated and operational.

If a vehicle is detected close to your vehicle and you actuate the turn signal indicator in its direction, a double warning tone sounds and the red warning lamp in the outside mirror flashes. If the turn signal indicator remains switched on, all other detected vehicles are indicated only by the flashing of the red warning lamp.

If you overtake a vehicle quickly, no warning is given.

WARNING
Risk of accident despite Blind Spot Assist

Blind Spot Assist does not react to vehicles approaching and overtaking you at a greatly different speed.

Blind Spot Assist cannot warn drivers in this situation.

► Always pay careful attention to the traffic situation and maintain a safe distance at the side of the vehicle.

Blind Spot Assist is only an aid. It may fail to detect some vehicles and is not a substitute for attentive driving. Observe the notes on driving systems and your responsibility; you may otherwise fail to recognise potential dangers (⟶ page 348).

EXIT WARNING

The exit warning is an additional function of Blind Spot Assist and can warn vehicle occupants about approaching vehicles when leaving the vehicle when stationary.

> ⚠ **WARNING**
> Risk of accident despite exit warning
>
> The exit warning neither reacts to stationary objects nor to persons or road users approaching you at a greatly differing speed.
>
> The exit warning cannot warn drivers in these situations.
>
> ► Always pay particular attention to the traffic situation when opening the doors and make sure there is sufficient clearance.

If there is a vehicle in the monitoring range, this is indicated in the outside mirror. If a vehicle occupant opens the door on the side with the warning, a warning tone sounds and the warning lamp in the outside mirror starts to flash.

This additional function is only available when Blind Spot Assist is active. When the exit warning is activated, it can warn vehicle occupants for up to three minutes after switching the vehicle off. The exit warning is no longer available once the warning lamp in the outside mirror flashes three times.

The exit warning is only an aid and not a substitute for the attention of vehicle occupants. The responsibility for opening the doors and exiting the vehicle remains with the vehicle occupants at all times.

SYSTEM LIMITS

BLIND SPOT ASSIST MAY BE RESTRICTED IN THE FOLLOWING SITUATIONS, IN PARTICULAR:

- if there is dirt on the sensors or the sensors are obscured
- in poor visibility, e.g. owing to fog, heavy rain or snow
- if there are narrow vehicles, e.g. bicycles or motorcycles
- if the road has very wide or narrow lanes
- if vehicles are not driving in the middle of their lane

Warnings may be issued in error when driving close to crash barriers or similar continuous lane borders. Always make sure that there is sufficient distance to the side for other traffic or obstacles.

Warnings may be interrupted when driving alongside long vehicles, e.g. trucks, for a prolonged period.

Blind Spot Assist is not operational when reverse gear is engaged.

Blind Spot Assist and the exit warning are not operational when a trailer is coupled to the vehicle and the electrical connection has been correctly established.

THE EXIT WARNING MAY BE LIMITED IN THE FOLLOWING SITUATIONS:

- when the sensors are covered by adjacent vehicles in narrow parking spaces
- when people approach the vehicle
- in the event of stationary or slowly moving objects

ACTIVATING OR DEACTIVATING BLIND SPOT ASSIST
Multimedia system:
Settings » Assistance » Collision avoidance
▶ Activate or deactivate Blind Spot Assist.

Active Lane Keeping Assist

FUNCTION OF ACTIVE LANE KEEPING ASSIST
Active Lane Keeping Assist monitors the area in front of your vehicle using the multifunction camera (⟶ page 348).

It can protect you against unintentionally departing your lane. The system can guide you back into your lane with a course-correcting steering intervention, and warn you with tangible steering wheel feedback.

Active Lane Keeping Assist is available in the speed range between 60 km/h and 200 km/h.

THE SYSTEM CAN INTERVENE IF THE FOLLOWING CONDITIONS ARE MET:

- Active Lane Keeping Assist detects a lane marking.
- You touch this lane marking with one of your front wheels.

If you activate the turn signal indicators, there is no steering intervention on that side.

There is no steering intervention if you leave your lane without activating the turn signal indicators, but there is a risk of collision with a moving obstacle in your own lane.

Vehicles with Blind Spot Assist or Driving Assistance Package: If the system detects an obstacle, e.g. another vehicle, in the adjacent lane, there is steering intervention despite the direction indicators.

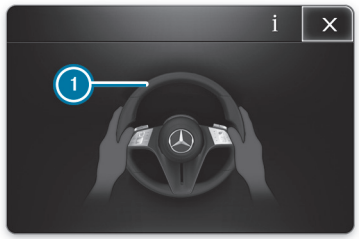

IN THE FOLLOWING CASES THE WARNING (1) APPEARS ON THE DRIVER DISPLAY AND A WARNING TONE SOUNDS:

- A steering intervention by Active Lane Keeping Assist lasts more than approximately ten seconds.
- There are two or more steering interventions by the systems within approximately three minutes, without steering intervention by the driver.

You can set the sensitivity of the system in the Active Lane Keeping Assist settings in order to determine the level of assistance. You can also determine whether the system is to react to broken lane markings, or only to continuous lane markings (⟶ page 391).

STATUS DISPLAYS OF ACTIVE LANE KEEPING ASSIST

White: Active Lane Keeping Assist is switched off.

If ESP® is switched off or a tyre pressure loss warning is indicated, Active Lane Keeping Assist is automatically switched off.

Yellow: There is a malfunction. Also note any display messages.

Grey: Active Lane Keeping Assist is switched on but not ready.

Green: Active Lane Keeping Assist is switched on and ready.

Red: Active Lane Keeping Assist has guided you back into your lane by a course-correcting steering intervention. If a tangible warning is

also given in the steering wheel, the status display flashes. The lane marking of the affected side is shown in red.



Notification on the driver display in the Assistance menu

If one of your front wheels moves onto a detected lane marking, this is highlighted in red in the Assistance menu on the driver display.

SYSTEM LIMITS

IN THE FOLLOWING SITUATIONS, THERE MAY BE NO COURSE-CORRECTING STEERING INTERVENTION, BUT A WARNING MAY BE GIVEN IN THE STEERING WHEEL DEPENDING ON THE SITUATION:

- if you clearly and actively steer, brake or accelerate.
- if a driving safety system is intervening, e.g. ESP® or Active Brake Assist.
- if you have adopted a sporty driving style with high cornering speeds or high rates of acceleration.
- If transport equipment, e.g. a trailer or bicycle rack, is attached to the trailer hitch and the electrical connection has been correctly established

THE SYSTEM MAY BE IMPAIRED OR INOPERATIVE IN THE FOLLOWING SITUATIONS IN PARTICULAR:

- if there is poor visibility, e.g. owing to insufficient illumination of the road, highly variable shade conditions, rain, snow, fog or heavy spray
- if there is glare, e.g. from oncoming traffic, direct sunlight or reflections.
- If there is soiling on the windscreen in the vicinity of the multifunction camera, or if the camera is misted up, damaged or obscured.
- if the bumper is soiled in the area of the radar sensors, or if these are damaged or obscured
- If there are no lane markings or several unclear lane markings for one lane, e.g. around roadworks
- If the lane markings are worn, dark or covered
- If the distance to the vehicle in front is too short and therefore the lane markings cannot be detected
- If the lane markings change quickly, e.g. lanes branch off, cross one another or merge
- If the lanes are very narrow and winding

Observe the notes on driving systems and your responsibility; otherwise you may fail to recognise potential dangers (⟶ page 348).

ACTIVATING/DEACTIVATING ACTIVE LANE KEEPING ASSIST

Multimedia system:

Settings » Assistance » Collision avoidance » Active Lane Keeping Assist

▶ Activate or deactivate the function.

Alternatively, Active Lane Keeping Assist can be activated and deactivated via vehicle quick-access.

ⓘ The setting after starting the vehicle depends on the country.

SETTING ACTIVE LANE KEEPING ASSIST
Multimedia system:
Settings » Assistance » Collision avoidance » Active Lane Keeping Assist

SETTING THE SENSITIVITY

- ► Select ⚙.
- ► Select Early, Med. or Late.

The last setting selected will be applied the next time the vehicle is started.

ⓘ The standard setting of this function is country-dependent.

ⓘ The function may not be available on vehicles with Driving Assistance Package, depending on the country.

ACTIVATING/DEACTIVATING ASSISTANCE WHEN LANE MARKINGS ARE INTERRUPTED

- ► Select Advanced support.

The last setting selected will be applied the next time the vehicle is started.

ⓘ The standard setting of this function is country-dependent.

ⓘ Depending on the country, this function must be activated in order for the full scope of Emergency Stop Assist to be available. Further information on Emergency Stop Assist (⟶ page 373).

Function of adaptive damping adjustment

The suspension with adaptive damping adjustment continually adjusts the characteristics of the suspension dampers to the current operating and driving conditions.

THE DAMPING IS SET INDIVIDUALLY FOR EACH WHEEL AND IS AFFECTED BY THE FOLLOWING FACTORS:

- the road surface conditions
- the vehicle load
- the drive program selected
- the driving style

The drive program can be adjusted using DYNAMIC SELECT.

Reversing camera

FUNCTION OF THE REVERSING CAMERA
The reversing camera serves solely as an aid. It is not a substitute for you having to pay attention to your surroundings. The responsibility for safe manoeuvring and parking remains with you. Ensure that there are no persons, animals or objects etc. in the manoeuvring area while manoeuvring and parking.

ⓘ The area behind the vehicle is displayed as a mirror image, as it would appear in the inside mirror.

CAMERA PERSPECTIVE ON THE CENTRAL DISPLAY
Vehicles without Parking Package

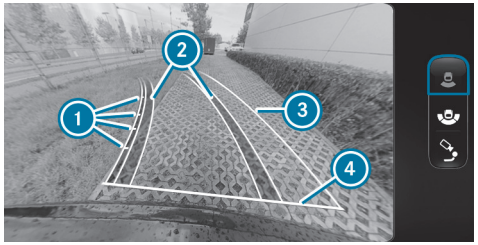

Example

1. Guide lines at a distance of approximately 0.5 m, 1.0 m, 1.5 m and 3.0 m from the rear area
2. Path indicating the route the wheels will take at the current steering angle (dynamic)
3. Driven surface depending on the current steering angle (dynamic)
4. Guide line at a distance of approximately 0.3 m from the rear area

WIDE-ANGLE VIEW



Example

1. Switching on the wide-angle view

TRAILER VIEW

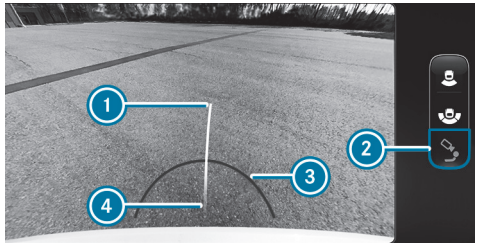

Example

1. Yellow guide line, locating aid
2. Switching on the trailer view
3. Red guide line at a distance of approximately 0.3 m from the ball head of the trailer hitch
4. Ball head of the trailer hitch

PEDESTRIAN BRAKING FUNCTION

ⓘ This function is only available in vehicles without the Parking Package. Vehicles with the Parking Package are equipped with manoeuvring assistant functions (→ page 409).

The pedestrian braking function can prevent collisions with pedestrians when reversing the vehicle at slow speeds. If the reversing camera detects a person in the vehicle's path, the vehicle can be braked to a standstill.

THE PEDESTRIAN BRAKING FUNCTION CAN INTERVENE UNDER THE FOLLOWING CONDITIONS:

- The vehicle is reversing at a speed below 15 km/h.
- The camera image is shown on the central display.

When automatic braking is triggered, the symbol appears in red in the camera image.

In addition, the message Pedestrian! Deact. emerg. braking: press here appears.

The driver can close or ignore this message. Pedestrian braking then remains active. When the driver taps the message, pedestrian braking is momentarily deactivated.

IN THE FOLLOWING CASES, THE PEDESTRIAN BRAKING FUNCTION IS ACTIVATED AGAIN:

- The vehicle is travelling forwards faster than 16 km/h.
- The vehicle is switched off and on again.

If the function is unavailable or deactivated, the symbol appears in grey in the camera image.

The pedestrian braking function serves solely as an aid. It is not a substitute for you having to pay attention to your surroundings. The responsibility for safe manoeuvring, parking and exiting parking spaces remains with you. Ensure that no persons, animals or objects etc. are in the vehicle's path.

WARNING
Risk of accident caused by limited detection of the pedestrian braking function

The pedestrian braking function cannot always clearly detect people. Other obstacles are not detected by the function.

In these cases, the function may brake unnecessarily or not brake at all.

- ► Always pay careful attention to the traffic situation; do not rely on the pedestrian braking function alone.
- ► Be ready to brake.

IN THE FOLLOWING SITUATIONS, THE PEDESTRIAN BRAKING FUNCTION IS NOT AVAILABLE:

- on uphill gradients
- If transport equipment, e.g. a trailer or bicycle rack, is attached to the trailer hitch and the electrical connection has been correctly established.
- if the reversing camera is not operational

Please also note the system limits of the reversing camera.

CAMERA PERSPECTIVE ON THE CENTRAL DISPLAY
Vehicles with Parking Package

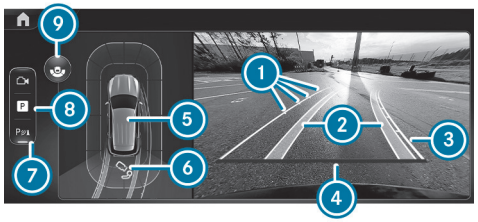

Example

1. Guide lines at a distance of approximately 0.5 m, 1.0 m, 1.5 m and 3.0 m from the rear area
2. Path indicating the route the wheels will take at the current steering angle (dynamic)
3. Driven surface depending on the current steering angle (dynamic)
4. Guide line at a distance of approximately 0.3 m from the rear area
5. Warning display of Parking Assist PARKTRONIC (⟶ page 400)
6. Trailer view or reversing camera (depending on the respective vehicle version)
7. Activate/deactivate Parking Assist PARKTRONIC (⟶ page 402)
8. Menu Parking Assistance
9. Wide-angle view

ⓘ When Active Parking Assist is active, the paths 2 are displayed in green (⟶ page 403).

WIDE-ANGLE VIEW



Example

1. Switch on the standard view
2. Warning display of Parking Assist PARKTRONIC (⟶ page 400)
3. Activate/deactivate Parking Assist PARKTRONIC (⟶ page 402)

TRAILER VIEW

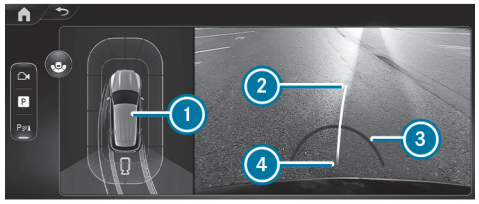

Example

1. Warning display of Parking Assist PARKTRONIC (⟶ page 400)
2. Yellow guide line, locating aid
3. Red guide line at a distance of approximately 0.3 m from the ball head of the trailer hitch
4. Ball head of the trailer hitch

SYSTEM LIMITS
If the system is not ready for operation, the message System inoperative appears on the driver display and/or on the central display.

If a camera perspective is selected and the central display is temporarily black or does not show a camera image, the camera system is also faulty or is not ready for operation.

> ⚠ **WARNING**
> Risk of accident due to functional limitations of the reversing camera
>
> Functional limitations of the reversing camera could lead to a risk of collision with persons or objects.
>
> ► Do not use the reversing camera if its functions are limited.
>
> ► Ensure that there are no persons, animals or objects etc., in the manoeuvring area while manoeuvring and parking.

THE REVERSING CAMERA WILL NOT FUNCTION, OR WILL ONLY PARTIALLY FUNCTION IN THE FOLLOWING SITUATIONS:

- You are driving forwards at a speed greater than approximately 16 km/h.
- The weather conditions are poor, e.g. heavy rain, snow, fog, storm or spray.
- The light conditions are poor, e.g. at night or if a light is shining into the camera.
- The camera lens is obstructed, dirty or misted up. Observe the notes on cleaning the reversing camera (⟶ page 617).
- The camera or rear of your vehicle is damaged. In this case, have the camera, its position and setting checked at a qualified specialist workshop.

The field of vision and other functions of the camera system may be restricted due to additional vehicle attachments (e.g. licence plate bracket or bicycle rack).

ⓘ The contrast of the display can be impaired by incidental light or other light sources, e.g. when driving out of a garage. Particular attention must be afforded in this case.

ⓘ Have the display repaired or replaced if, forexample, its use is considerably restricted due to pixel errors.

Observe also the information on vehicle sensors and cameras (⟶ page 348).

360° Camera

FUNCTION OF THE 360° CAMERA
THE 360° CAMERA IS A SYSTEM COMPRISING FOUR CAMERAS:

- Front camera
- Reversing camera
- Two outside mirror cameras

The cameras record the immediate surroundings of the vehicle and provide assistance, e.g. during parking or at exits which are difficult to see.

The cameras serve solely as aids and may show a distorted view of obstacles, show them incorrectly or even omit them altogether. They are not a substitute for you having to pay attention to your surroundings. The responsibility for safe manoeuvring and parking remains with you. Ensure that there are no persons, animals or objects etc. in the manoeuvring area while manoeuvring and parking.

CAMERA PERSPECTIVES ON THE CENTRAL DISPLAY

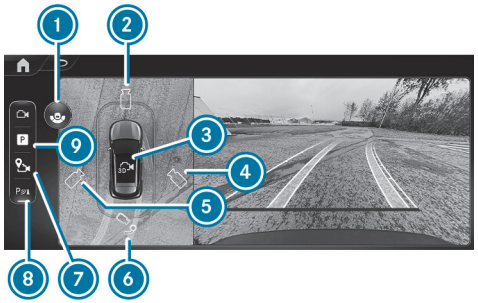

Example

1. Switching between standard view and wide-angle view
2. Image from the front camera
3. 3D auto view
4. 3D view right-hand side of the vehicle
5. 3D view left-hand side of the vehicle
6. Trailer view (depending on the respective equipment) or reversing camera
7. Set the GPS activation point (⟶ page 399)
8. Activate/deactivate Parking Assist PARKTRONIC (⟶ page 402)
9. Menu Parking Assistance

ⓘ The warning display of Parking Assist PARKTRONIC is shown in all views (⟶ page 400).

ⓘ Availability of the 3D-Auto-View 3 and 3D-View 4, 5 functions is dependent upon the respective equipment.

FUNCTION OF THE GUIDE LINES

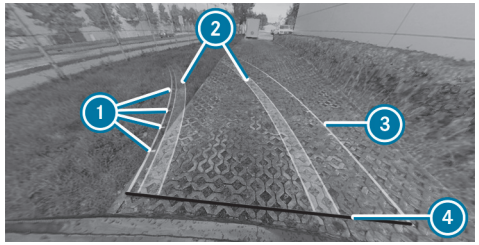

Example

1. Guide lines at a distance of approximately 0.5 m, 1.0 m, 1.5 m and 3.0 m from the rear area
2. Path indicating the route the wheels will take at the current steering angle (dynamic)
3. Driven surface depending on the current steering angle (dynamic)
4. Guide line at a distance of approximately 0.3 m from the rear area

ⓘ When Active Parking Assist is active, paths and guide lines are displayed in green instead of yellow (⟶ page 403).

TOP VIEW WITH THE IMAGE FROM THE FRONT OR REVERSING CAMERA

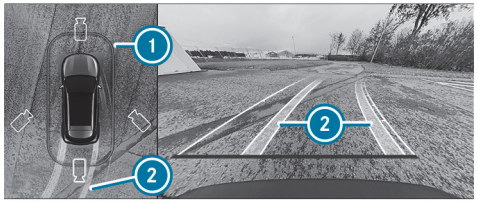

Example

(1) Warning display of Parking Assist PARKTRONIC (⟶ page 400)
(2) Path indicating the current steering angle

TOP VIEW WITH IMAGE FROM THE OUTSIDE MIRROR CAMERAS

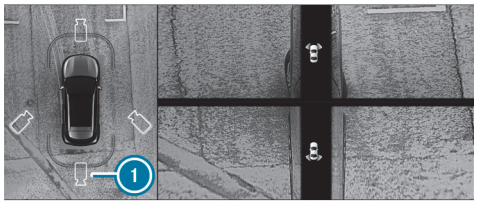

Example

(1) Switch to the side view of the outside mirror cameras

The front and rear sides of the vehicle can be seen in this view.

WIDE-ANGLE VIEW



Example

(1) Switching between standard view and wide-angle view
(2) Display of Parking Assist PARKTRONIC (⟶ page 400)
(3) Activating/deactivating Parking Assist PARKTRONIC (⟶ page 402)

TRAILER VIEW

If you select the trailer view and no trailer is coupled to the vehicle, the following display appears:

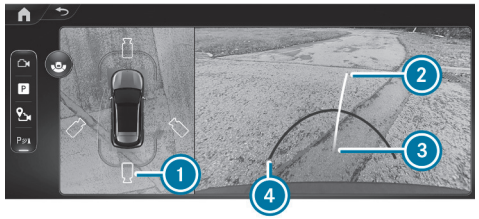

Example

(1) Switching between standard view and trailer view
(2) Yellow guide line, locating aid
(3) Ball head of the trailer hitch
(4) Red guide line at a distance of approximately 0.3 m from the ball head of the trailer hitch

ⓘ In trailer mode, the guide lines are shown at the level of the trailer hitch.

When the electrical connection is established between the vehicle and the trailer, the display changes to the side camera view.

SIDE VIEW OF OUTSIDE MIRROR CAMERA IN THE TRAILER VIEW



Example

① Switching to the reversing camera or trailer view

SYSTEM LIMITS

If the system is not ready for operation, the message System inoperative appears on the driver display and/or on the central display.

If a camera perspective is selected and the central display is temporarily black or does not show a camera image, the camera system is also faulty or is not ready for operation.

⚠ **WARNING**
Risk of accident due to functional limitations of the 360° camera

If the function of the 360° camera is restricted, there is a risk of collision with persons or objects.

- ► Do not use the 360° camera in case of functional limitations.
- ► Ensure that there are no persons, animals or objects etc., in the manoeuvring area while manoeuvring and parking.

THE 360° CAMERA WILL NOT FUNCTION, OR WILL ONLY PARTIALLY FUNCTION IN THE FOLLOWING SITUATIONS, FOR EXAMPLE:

- You are driving forwards at a speed greater than approximately 16 km/h.
- The doors are open.
- An outside mirror is not completely extended.
- The tailgate is open.
- The weather conditions are poor, e.g. heavy rain, snow, fog, storm or spray.
- The light conditions are poor, e.g. at night or if a light is shining into the camera.
- The camera lens is obstructed, dirty or misted up. Refer to the notes on cleaning the 360° camera (→ page 617).
- If cameras or vehicle components in which the cameras are fitted are damaged. In this event, have the cameras, their positions and their setting checked at a qualified specialist workshop.

For technical reasons, the standard height of the vehicle may be altered if the vehicle is carrying a heavy load and this can result in inaccuracies in the guide lines and in the display of generated images.

The field of vision and other functions of the camera system may be restricted due to additional vehicle attachments (e.g. licence plate bracket or bicycle rack).

ⓘ Contrast of the display may be impaired by abrupt direct sunlight or other light sources, e.g. when driving out of a garage. Particular attention must be afforded in this case.

ⓘ Have the display repaired or replaced if, forexample, its use is considerably restricted due to pixel errors.

Observe also the information on vehicle sensors and cameras (⟶ page 348).

CALLING UP THE 360° CAMERA VIEWS USING THE BUTTON

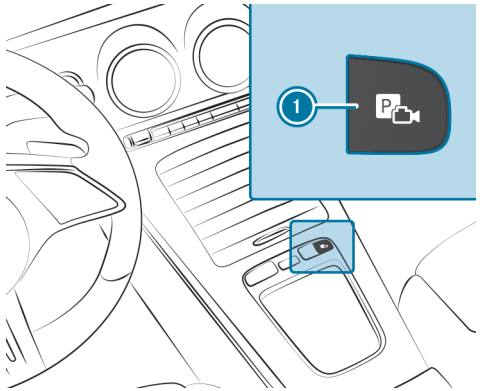

- Press button 1.
- Select the menu Camera views .
- Select the desired view in the multimedia system (⟶ page 395).

SELECTING A VIEW FOR THE 360° CAMERA (REVERSE GEAR)

- Engage reverse gear.
- Select the desired view in the multimedia system (⟶ page 395).

MANAGING 360° CAMERA WITH GPS-ACTIVATION POSITIONS

Multimedia system:

⟶ ⌂ ▸▸ Settings ▸▸ Assistance ▸▸ Camera

RENAMING AN ACTIVATION POSITION

ⓘ You can determine activation positions in the Camera views menu (⟶ page 395).

- Select ••• for the desired activation position.
- Select Edit.
- Enter a name and confirm.
  The activation position is stored under the new name.

DELETING AN ACTIVATION POSITION

- Select ••• for the desired activation position.
- Select Delete entry.
- Confirm the prompt.
  The activation position is deleted.

OPENING THE CAMERA COVER

Multimedia system:

⟶ ⌂ ▸▸ Settings ▸▸ Assistance ▸▸ Camera

- Select Open camera cover.

The camera cover closes automatically after some time, or after the vehicle is switched on or off.

Parking Assist PARKTRONIC

FUNCTION OF PARKING ASSIST PARKTRONIC

Parking Assist PARKTRONIC is an electronic parking assistance system which monitors the area surrounding your vehicle . The distance between your vehicle and a detected obstacle is displayed visually and acoustically.

The passive side impact protection also warns you of obstacles to the side. These must be detected beforehand by the sensors in the front or rear bumper while driving by them. If you steer in the direction of a detected obstacle and there is a risk of a lateral collision, a warning is issued.

Passive side impact protection can be activated and deactivated via the multimedia system (⟶ page 403).

In order that front or rear obstacles to the side can be displayed, the vehicle must first travel a distance of at least half a vehicle length. Once the vehicle has travelled a distance of one vehicle length, obstacles on all sides can be shown.

Parking Assist PARKTRONIC serves solely as an aid. It is not a substitute for you having to pay attention to your surroundings. The responsibility for safe manoeuvring, parking and departing remains with you at all times. Ensure that there are no persons, animals or objects etc. in the manoeuvring area while manoeuvring and parking in/exiting parking spaces.

DISPLAYS ON THE CENTRAL DISPLAY

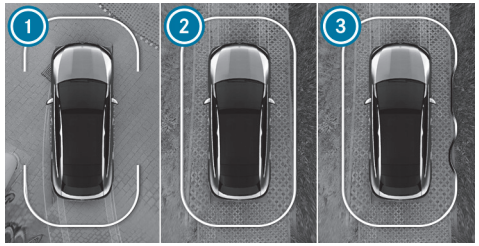

Example: vehicles with 360° camera

1 Ready for display at the front and rear
2 Ready for display all around
3 Ready for display all around and obstacles detected

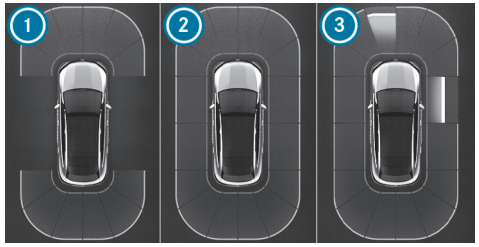

Example: vehicles with reversing camera

1 Ready for display at the front and rear
2 Ready for display all around
3 Ready for display all around and obstacles detected

As soon as Parking Assist PARKTRONIC is ready for display, the respective areas 1 to 3 of the display are shown in blue.

THE COLOUR OF THE DISPLAY CHANGES DEPENDING ON THE DISTANCE TO THE DETECTED OBSTACLE:

- **Blue:** > 1 m (no obstacles detected)
- **Yellow:** approximately 1 m - 0.7 m
- **Orange:** approx. 0.7 m - 0.4 m
- **Red:** < 0.4 m

Vehicles with 360° camera: the boundary line shifts dynamically depending on the position and distance of the obstacles detected.

An intermittent warning tone also sounds depending on the distance to the obstacle detected. You can set the timing of the warnings in the multimedia system. In the Warn early setting, the system warns you from a distance of 1 m. In the standard setting, from a shorter distance of 0.4 m.



Example: vehicles with 360° camera

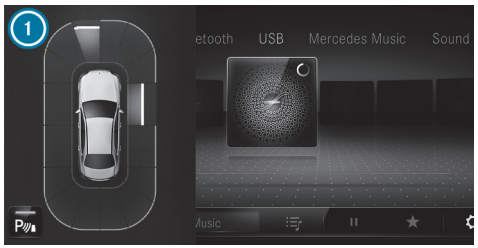

Example: vehicles with reversing camera

IF YOU ARE NOT IN THE CAMERA & PARKING MENU AND AN OBSTACLE IN THE VEHICLE'S PATH IS DETECTED, A POP-UP WINDOW (1) APPEARS ON THE CENTRAL DISPLAY IF THE FOLLOWING REQUIREMENTS ARE MET:

- **Vehicles without Active Parking Assist:** when driving no faster than 12 km/h.
- **Vehicles with Active Parking Assist:** when driving no faster than 18 km/h.

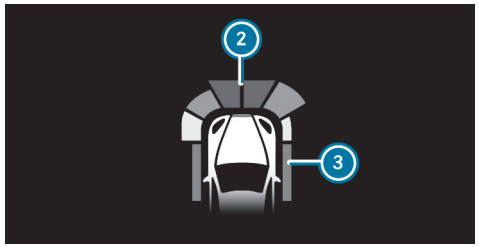

Notifications in the head-up display (example)

Optionally, obstacles detected by Parking Assist PARKTRONIC from a distance of approximately 1.0 m in front (2) and 0.7 m at the sides (3) can also be displayed on the head-up display.

SYSTEM LIMITS

PARKING ASSIST PARKTRONIC DOES NOT NECESSARILY TAKE INTO ACCOUNT THE FOLLOWING OBSTACLES:

- Obstacles below the detection range, e.g. persons, animals or objects
- Obstacles above the detection range, e.g. protruding loads, overhangs or loading ramps of lorries
- Pedestrians or animals approaching the vehicle from the side
- Objects placed next to the vehicle

OBSTACLES ON THE SIDES ARE NOT SHOWN IN THE FOLLOWING SITUATIONS, FOR EXAMPLE:

- You park the vehicle and switch it off.
- You open the doors.

After the vehicle is restarted, obstacles must be detected again by driving past them before a new warning can be issued.

OBSERVE ALSO THE SYSTEM LIMITS OF THE FOLLOWING SYSTEMS:

- Reversing camera (⟶ page 391)
- 360° camera (⟶ page 395)

Observe the information on vehicle sensors and cameras; otherwise the system cannot function properly (⟶ page 348).

Vehicles with trailer hitch: If a transport device, e.g. trailer or bicycle rack is attached to the trailer hitch and the electrical connection is correctly established, Parking Assist PARKTRONIC is deactivated for the rear zone.

PROBLEMS WITH PARKING ASSIST PARKTRONIC

If the Parking Assist PARKTRONIC display lights up red for approximately three seconds and then goes out, and the symbol [P OFF] appears on the driver display, the system may have been deactivated due to signal interference. Start the vehicle again and check whether Parking Assist PARKTRONIC works in a different location.

IF A WARNING TONE ALSO SOUNDS, THE CAUSES MAY BE AS FOLLOWS:

- **The sensors are dirty:** clean the sensors (⟶ page 617).
- **Parking Assist PARKTRONIC has been deactivated due to a malfunction:** restart the vehicle. If the problem persists, consult a qualified specialist workshop.

ACTIVATING/DEACTIVATING PARKING ASSIST PARKTRONIC

NOTE
Vehicle damage when parking or manoeuvring due to nearby objects

Parking Assist PARKTRONIC may not detect certain objects in the close-up range.

► When parking or manoeuvring, pay particular attention to objects that are under or above the sensors, e.g. flower pots or drawbars. The vehicle or other objects may otherwise be damaged.

Requirements:

- The camera menu is open.
- Or: the Parking Assist PARKTRONIC pop-up window is displayed.

► Tap [P] on the central display.

If the indicator lamp is lit, Parking Assist PARKTRONIC is active. If the indicator lamp does not light up or the symbol [P OFF] is displayed, Parking Assist PARKTRONIC is not active.

ⓘ Parking Assist PARKTRONIC is automatically activated when the vehicle is started.

Alternatively, Parking Assist PARKTRONIC can be activated or deactivated in the quick-access menu.

SETTING THE PARKING ASSIST PARKTRONIC WARNING TONES

Multimedia system:

Settings » Assistance » Parking » PARKTRONIC

SETTING WARNING TONES

- ► Select Set warning tones.
- ► Set the desired value under Volume or Tone pitch.

ACTIVATING/DEACTIVATING AUDIO FADEOUT

- ► Select Audio fadeout and activate or deactivate Audio fade for warnings.

  The volume of the media source currently playing is reduced when a Parking Assist PARKTRONIC warning tone sounds.

or

- ► Select Audio fadeout and activate or deactivate Audio fadeout in trans. position R.

  The volume of the media source currently playing is reduced when reverse gear is engaged.

SETTING THE WARNING TIME

- ► Select Time of warning.
- ► Set the desired warning time for Front or Rear.
- ► Activate or deactivate Side warning.

Active Parking Assist

FUNCTION OF ACTIVE PARKING ASSIST

WARNING

Risk of accident due to objects located above or below the detection range of Active Parking Assist

IF THERE ARE OBJECTS ABOVE OR BELOW THE DETECTION RANGE, THE FOLLOWING SITUATIONS MAY ARISE:

- Active Parking Assist may steer too early.
- The vehicle may not stop in front of these objects.

There is a danger of collision!

- ► In these situations, do not use Active Parking Assist.

Active Parking Assist is an electronic parking assistance system which uses ultrasound with the assistance of the reversing camera or 360° camera. When you are driving forwards up to approximately 35 km/h, the system automatically measures parking spaces on both sides of the vehicle.

Active Parking Assist serves solely as an aid. It is not a substitute for you having to pay attention to your surroundings. The responsibility for safe manoeuvring, parking and unparking remains with you at all times. Ensure that no persons, animals or objects etc. are in the vehicle's path.

Active Parking Assist offers the following functions:

VEHICLES WITH REVERSING CAMERA

- Parking in parking spaces parallel to the roadway
- Reversing into parking spaces perpendicular to the roadway

The parking space is freely selectable. The parking procedure is executed with the vehicle reversing.

VEHICLES WITH 360° CAMERA

- Parking in parking spaces parallel to the roadway
- Parking in parking spaces perpendicular to the roadway (either forwards or reversing as desired)
- Parking in parking spaces that can only be detected as such from markings (forexample at the roadside)
- Exiting parking spaces if you have parked using Active Parking Assist

The parking space is freely selectable. The parking direction (forwards or reversing) can also be freely selected, depending on the orientation of the parking space.

If Active Parking Assist is available, the notification [P] appears on the driver display. When the system detects parking spaces, the notification [P] appears. The arrows show the side of the roadway on which free parking spaces are detected. These are then shown on the central display.

When Active Parking Assist is activated, the turn signal indicator is activated based on the calculated path of your vehicle. The parking and unparking procedures are assisted by acceleration, braking, steering and gear changes.

To start the parking procedure, press the button [P] (⟶ page 405).

ACTIVE PARKING ASSIST WILL BE CANCELLED IN THE FOLLOWING SITUATIONS:

- You press the button [P] again.
- You begin steering.
- You select the park position [P].
- You engage the electric parking brake.
- ESP® intervenes.
- You open the driver's door.

SYSTEM LIMITS
If the exterior lighting is malfunctioning, Active Parking Assist is not available.

OBSERVE ALSO THE SYSTEM LIMITS OF THE FOLLOWING SYSTEMS:

- Reversing camera (⟶ page 391)
- 360° camera (⟶ page 395)

Objects above or below the detection range of Active Parking Assist, e.g. protruding loads, overhangs or loading ramps of trucks or parking space boundaries are not detected when measuring the parking space. These are also not subsequently taken into account when calculating the parking procedure. In some circumstances, Active Parking Assist may therefore prematurely guide you into the parking space or brake too late.

Certain environmental conditions, suchas snowfall or heavy rain, may lead to a parking space being mismeasured. Parking spaces that are partially occupied by trailer drawbars might not be identified as such or may be measured incorrectly. Only use Active Parking Assist on level road surfaces with adequate grip.

Active Parking Assist can also display unsuitable parking spaces, e.g. parking spaces in which parking is not permitted or on unsuitable surfaces.

DO NOT USE ACTIVE PARKING ASSIST IN THE FOLLOWING SITUATIONS, FOR EXAMPLE:

- in extreme weather conditions, suchas ice, packed snow or in heavy rain.
- when transporting a load that protrudes beyond the vehicle
- if the parking space is on a steep downhill or uphill gradient

- when snow chains are fitted
- when a trailer or bicycle rack is attached
- directly after a tyre change or when spare tyres are fitted
- if the tyre pressure is too low or too high
- on steep downhill gradients of more than approximately 15%
- if the vehicle level has been offset, e.g. mounting the kerb on one side (vehicles with level control)

PARKING WITH ACTIVE PARKING ASSIST

WARNING
Risk of accident due to objects located above or below the detection range of Active Parking Assist

IF THERE ARE OBJECTS ABOVE OR BELOW THE DETECTION RANGE, THE FOLLOWING SITUATIONS MAY ARISE:

- Active Parking Assist may steer too early.
- The vehicle may not stop in front of these objects.

There is a danger of collision!

► In these situations, do not use Active Parking Assist.

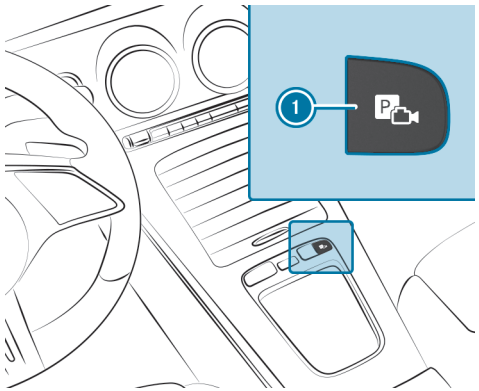

► Press the button (1).

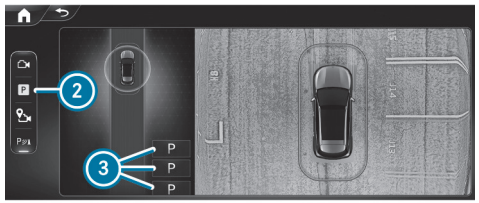

Parking Assist menu (example for left-hand side of the screen)

► Select the menu Parking Assistance (2).

Parking spaces (3) detected by the system are shown on the central display.

At speeds greater than approximately 16 km/h, the camera perspective on the right-hand side of the screen switches off.

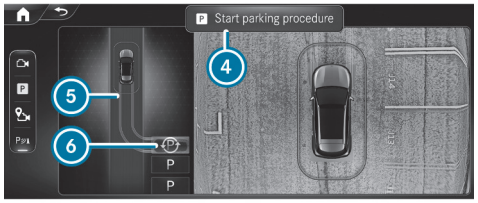

Parking Assist menu (example)

When the vehicle is at a standstill, the indicated vehicle path (5) into the currently selected parking space (6) also appears.

- If a parking space is displayed: stop the vehicle.
- If necessary, select another parking space.
- **Vehicles with 360° camera:** to change the parking direction, tap the selected parking space again.
- **To start the parking procedure:** press the button (1) again.

or

- Depress the brake pedal and select Start parking procedure (4).
- Take your hands off the steering wheel and release the brake pedal.

  The vehicle drives into the selected parking space.

  The duration of the parking procedure is indicated by a progress bar.

The turn signal indicator is switched on automatically when the parking procedure begins. You are responsible for selecting the turn signal indicator in accordance with the traffic conditions. If necessary, select the turn signal indicator accordingly.

WARNING
Risk of accident due to vehicle swinging out while parking or pulling out of a parking space

While parking or exiting a parking space, the vehicle swings out and can drive onto areas of the oncoming lane.

This could cause you to collide with objects or other road users.

- Pay attention to objects and other road users.
- Where necessary, stop the vehicle or cancel the parking procedure with Active Parking Assist.

Following completion of the parking procedure, the message Active Parking Assist finished appears.

- Secure the vehicle against rolling away. When necessitated by legal requirements or local conditions: turn the wheels towards the kerb.

You can stop the vehicle and change the transmission position during the parking procedure. The system then calculates a new vehicle path. If no new vehicle path is available, the transmission position can be changed again, or the process can be cancelled.

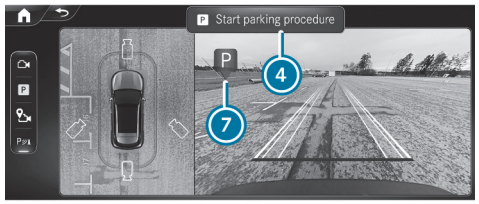

Immediate parking via the Camera views menu

- ► Select the Camera views menu.
- ► When the vehicle is stationary and in transmission position [R], and the symbol (7) appears in the camera image: press the button (1) again.

or

- ► Depress the brake pedal and select Start parking procedure (4).

  The parking procedure is initiated for the detected parking space.

ⓘ The parking space and parking direction cannot be changed in immediate parking.

EXITING A PARKING SPACE WITH ACTIVE PARKING ASSIST

⚠ **WARNING**
Risk of accident due to objects located above or below the detection range of Active Parking Assist

IF THERE ARE OBJECTS ABOVE OR BELOW THE DETECTION RANGE, THE FOLLOWING SITUATIONS MAY ARISE:

- Active Parking Assist may steer too early.
- The vehicle may not stop in front of these objects.

There is a danger of collision!

- ► In these situations, do not use Active Parking Assist.

Requirements:

- The vehicle is equipped with a 360° camera.
- The vehicle has been parked with Active Parking Assist.

- ► Start the vehicle.

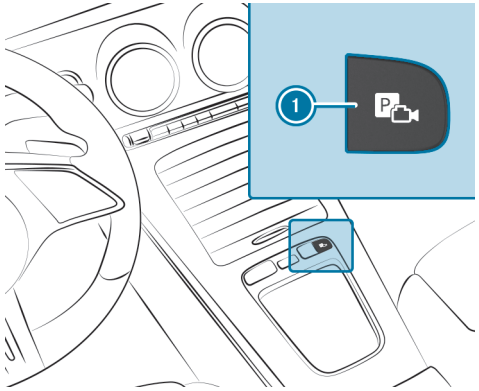

- ► Press the button (1).

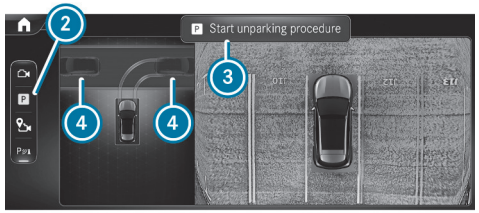

Parking Assist menu (example for left-hand side of the screen)

- ► Select the menu Parking Assistance (2).
- ► If necessary, change the direction of exit (4).
- ► **To initiate the unparking procedure:** press the button (1) again.

or

- ► Depress the brake pedal and select Start unparking procedure (3) (depending on the respective vehicle equipment).
- ► If necessary, change the transmission position. Observe any messages displayed on the driver display and central display.

  The vehicle moves out of the parking space.

  The duration of the unparking procedure is indicated by a progress bar.

The turn signal indicator is automatically switched on when the unparking procedure is initiated, and automatically switched off again when it is completed. You are responsible for selecting the turn signal indicator in accordance with the traffic conditions. If necessary, select the turn signal indicator accordingly.

WARNING
Risk of accident due to vehicle swinging out while parking or pulling out of a parking space

While parking or exiting a parking space, the vehicle swings out and can drive onto areas of the oncoming lane.

This could cause you to collide with objects or other road users.

- ► Pay attention to objects and other road users.
- ► Where necessary, stop the vehicle or cancel the parking procedure with Active Parking Assist.

After the parking space has been exited, a warning tone and the Active Parking Assist finished, take control of vehicle message prompt you to take control of the vehicle. You have to accelerate, brake, steer and change gear yourself again.

If you do not react to the prompt to reassume control of the vehicle, the system will brake the vehicle to a standstill.

PAUSING ACTIVE PARKING ASSIST

WARNING
Risk of accident due to objects located above or below the detection range of Active Parking Assist

IF THERE ARE OBJECTS ABOVE OR BELOW THE DETECTION RANGE, THE FOLLOWING SITUATIONS MAY ARISE:

- Active Parking Assist may steer too early.
- The vehicle may not stop in front of these objects.

There is a danger of collision!

- ► In these situations, do not use Active Parking Assist.

YOU CAN INTERRUPT THE PARKING OR UNPARKING PROCEDURE OF ACTIVE PARKING ASSIST BY PERFORMING ONE OF THE FOLLOWING ACTIONS, FOREXAMPLE:

- ► Depress the brake pedal.
- ► Open the front passenger door, a rear door, the tailgate or the bonnet.
- ► Apply the electric parking brake or activate the HOLD function.

REINITIATING THE PARKING OR UNPARKING PROCEDURE:

- ► Check the vehicle surroundings.
- ► Ensure once again that there are no persons, animals or objects in the vehicle's path.
- ► Gently depress the accelerator pedal.

  Observe the messages shown on the driver display and central display.
- ► Observe the system limits of Active Parking Assist (→ page 403).

AUTOMATIC BRAKING FUNCTION OF ACTIVE PARKING ASSIST

WARNING
Risk of accident due to objects located above or below the detection range of Active Parking Assist

IF THERE ARE OBJECTS ABOVE OR BELOW THE DETECTION RANGE, THE FOLLOWING SITUATIONS MAY ARISE:

- Active Parking Assist may steer too early.
- The vehicle may not stop in front of these objects.

There is a danger of collision!

► In these situations, do not use Active Parking Assist.

Persons or objects detected in the vehicle's path may trigger a sudden braking action, which will in turn halt the parking or unparking procedure. The vehicle will then remain at a standstill. The parking or unparking procedure is resumed if you depress the accelerator pedal.

Check the area around your vehicle again before resuming the parking or unparking procedure. Ensure once again that no persons, animals or objects are in the vehicle's path. Observe also the system limits of Active Parking Assist.

Manoeuvring assistant

FUNCTION OF DRIVE AWAY ASSIST

Drive Away Assist can reduce the severity of an impact when pulling away. If the system detects an obstacle in the direction of travel, the vehicle's speed is briefly restricted to approximately 2 km/h. When a critical situation is detected, the symbol appears on the central display.

Drive Away Assist can be switched off or on in the Manoeuvring assistance menu.

You can cancel an intervention by Drive Away Assist at any time by deactivating Parking Assist PARKTRONIC.

WARNING
Risk of accident caused by limited detection performance of Drive Away Assist

Drive Away Assist cannot always clearly identify objects and traffic situations.

► Always pay careful attention to the traffic situation; do not rely on Drive Away Assist alone.

► Be prepared to brake or swerve as necessary, provided the traffic situation permits and that it is safe to take evasive action.

Drive Away Assist serves solely as an aid. It is not a substitute for you having to pay attention to your surroundings. The responsibility for safe manoeuvring, parking and exiting parking spaces remains with you. Ensure that no persons, animals or objects etc. are in the vehicle's path.

A RISK OF COLLISION MAY ARISE IN THE FOLLOWING SITUATIONS, FOR EXAMPLE:

- If the driver mixes up the accelerator and brake pedals.
- If an incorrect transmission position is engaged.

THE DRIVE AWAY ASSIST FUNCTION IS ACTIVE UNDER THE FOLLOWING CONDITIONS:

- If Parking Assist PARKTRONIC is activated.
- If you shift the transmission position to R or D when the vehicle is at a standstill.
- If the detected obstacle is less than approx. 1.0 m away.
- Manoeuvring assistant is activated (⟶ page 411).

SYSTEM LIMITS
The performance of Drive Away Assist is limited on uphill gradients.

If a transport device, e.g. trailer or bicycle rack, is attached to the trailer hitch and the electrical connection is correctly established, Drive Away Assist is not available.

ⓘ Observe also the system limits of Parking Assist PARKTRONIC (⟶ page 400).

FUNCTION OF CROSS TRAFFIC ALERT

ⓘ The Cross Traffic Alert function is only available for vehicles with Blind Spot Assist.

The Cross Traffic Alert function can warn drivers of any crossing traffic when reversing and manoeuvring out of a parking space. The radar sensors in the bumper also monitor the area adjacent to the vehicle. If a critical situation is detected, the symbol appears on the central display, and the vehicle can be braked automatically.

If the radar sensors are obstructed by vehicles or other objects, detection is not possible.

Depending on the respective country, Cross Traffic Alert can be switched off or on in the menu Manoeuvring assistance (⟶ page 411).

THE CROSS TRAFFIC ALERT FUNCTION IS ACTIVE UNDER THE FOLLOWING CONDITIONS:

- If the vehicle is reversing at walking pace.
- Manoeuvring assistant is activated (⟶ page 411).

ⓘ Observe also the instructions on Blind Spot Assist (⟶ page 387).

SYSTEM LIMITS
The Cross Traffic Alert function is not available on uphill gradients.

If a transport device, e.g. trailer or bicycle rack is attached to the trailer hitch, and the electrical connection is correctly established, the Cross Traffic Alert function is not available.

FUNCTION OF CLOSE-RANGE BRAKING

⚠ **WARNING**
Risk of accident caused by limited detection by the manoeuvring brake function

The manoeuvring brake function cannot always clearly detect people. Other obstacles are not detected by the function.

In these cases, the function may brake unnecessarily or not brake at all.

► Always pay careful attention to the traffic situation; do not rely on the manoeuvring brake function alone.

► Be ready to brake.

Close-range braking can prevent collisions with pedestrians when the vehicle is reversing at slow speeds. If the reversing camera detects a person in the vehicle's path, the vehicle can be braked to a standstill.

CLOSE-RANGE BRAKING CAN INTERVENE UNDER THE FOLLOWING CONDITIONS:

- The vehicle is reversing at a speed slower than 10 km/h.
- The camera image is shown on the central display (⟶ page 399).

Depending on the respective country, close-range braking can be deactivated or activated in the Manoeuvring assistance menu (⟶ page 411).

When close-range braking is triggered, the symbol  appears in red in the selected view in the menu Camera & parking.

ⓘ If close-range braking is not available, the symbol  appears in grey.

Close-range braking serves solely as an aid. It is not a substitute for you having to pay attention to your surroundings. The responsibility for safe manoeuvring, parking and unparking remains with you at all times. Ensure that no persons, animals or objects etc. are in the vehicle's path.

SYSTEM LIMITS

OBSERVE THE SYSTEM LIMITS OF THE FOLLOWING FUNCTIONS:

- Active Parking Assist (⟶ page 403)
- 360° camera (⟶ page 395)
- Reversing camera (⟶ page 391)

THE CLOSE-RANGE BRAKING FUNCTION IS NOT AVAILABLE IN THE FOLLOWING SITUATIONS:

- on uphill gradients
- if transport equipment, e.g. a trailer or bicycle rack, is attached to the trailer hitch and the electrical connection has been correctly established.

You can watch an animation on this topic via the following link:

ACTIVATING/DEACTIVATING THE MANOEUVRING ASSISTANT

Multimedia system:



ⓘ This function is a Digital Extra (⟶ page 94).

ⓘ The 'activating/deactivating manoeuvring assistant' function is not available in all countries.

▶ Select Manoeuvring assistance.

▶ Activate or deactivate the desired manoeuvring assistant.

Trailer hitch

Notes on trailer operation

NOTE
The operating permit may be invalidated due to the illegal installation of trailer hitches

The installation – including retrofitting – of a non-folding or non-removable trailer hitch that even partially conceals the license plate or the lighting system is prohibited.

- ► Observe the applicable legal regulations for the installation of trailer hitches.

WARNING
Risk of accident due to car/trailer combination swerving

If you drive too fast in trailer operation, the car/trailer combination may start to swerve.

This could cause you to lose control of the car/trailer combination. The car/trailer combination may even overturn.

- ► Under no circumstances should you try to straighten the car/trailer combination by increasing your speed.
- ► Reduce the speed and do not countersteer.
- ► Brake if necessary.

Retrofitting a trailer hitch is permissible only if a trailer load is specified in your vehicle documents. If this is not the case, the vehicle is not approved for trailer operation.

Further information can be obtained at a qualified specialist workshop.

OBSERVE THE FOLLOWING NOTES ON THE TONGUE WEIGHT:

- do not use a tongue weight that exceeds or falls below the permissible tongue weight
- use a tongue weight as close as possible to the maximum tongue weight

DO NOT EXCEED THE FOLLOWING VALUES:

- permissible trailer load
- permissible rear axle load of the towing vehicle
- gross vehicle weight rating of the towing vehicle
- permissible gross mass of the trailer
- maximum permissible speed of the trailer

ENSURE THE FOLLOWING BEFORE STARTING A JOURNEY:

- the tyre pressure on the rear axle of the towing vehicle is set for a maximum load
- the lighting of the connected trailer is operational
- **Vehicles without LED headlamps or MULTIBEAM LED headlamps:** the headlamps have been set correctly

In the event of increased rear axle load, the car/trailer combination may not exceed a maximum speed of 100 km/h for reasons concerning the operating permit. This also applies in countries in which the permissible maximum speed for car/trailer combinations is above 100 km/h.

Folding the ball neck in and out

WARNING
Risk of accident due to the ball neck not being engaged

If the ball neck is not engaged, the trailer may come loose.

► Always engage the ball neck as described.

WARNING
Risk of injury from ball neck swinging outwards

The ball neck may swing outwards when unlocking or when it has not been properly engaged.

There is a risk of injury within the ball neck's range of movement!

► Unlock the ball neck only when its range of movement is unobstructed.

► Always be sure the ball neck is engaged when folding inwards.

NOTE
Increased risk of damage to property due to folded-out ball neck

► When the trailer is not coupled or the bicycle rack is attached, fold in the ball neck or, in the case of a fully electric trailer hitch, retract the ball neck.

NOTE

Damage to the vehicle due to incorrect use of the trailer hitch

If a trailer hitch is used to recover the vehicle, the vehicle or the trailer hitch itself may be damaged in the process.

- Use the trailer hitch only for pulling a trailer or attaching approved carrier systems (e.g. a bicycle rack).

  Exception: Since vehicles with a trailer hitch do not have a fixture for a towing eye at the rear, towing or tow-starting is permitted.

- When towing or tow-starting with the trailer hitch, observe the information in the section "Fitting and removing the towing eye."

FOLDING OUT THE BALL NECK

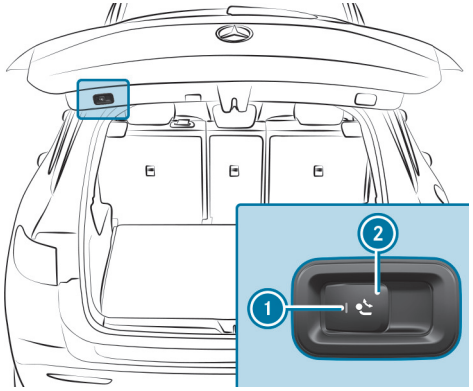

- Secure the vehicle against rolling away.
- Keep the swivel range clear.
- Pull the button (2) until the ball neck unlocks.

  The ball neck folds out from under the rear bumper.

  The indicator lamp (1) starts flashing.

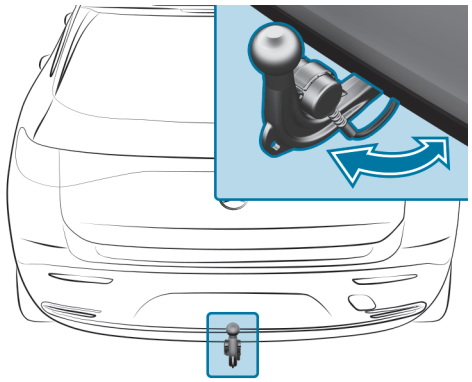

- Pull the ball neck in the direction indicated by the arrow until it engages audibly in a vertical position.

  The indicator lamp (1) on the ball neck release button goes out.

  If the ball neck is not securely locked in place, the Trailer coupling Check lock display message will appear on the driver display.

- Remove the cover cap from the ball head and store it in a safe place.

Ensure that the ball on the ball neck is clean. Check that it is either greased or dry (grease-free) in accordance with the instructions for the trailer.

FOLDING IN THE BALL NECK

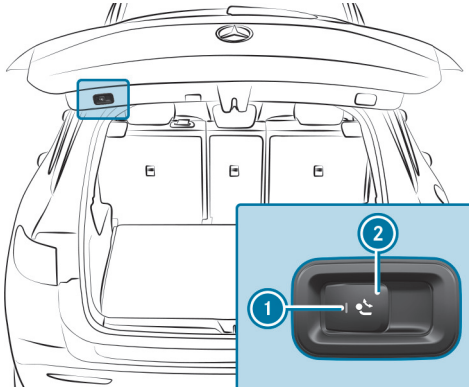

- ► Secure the vehicle against rolling away.
- ► Remove the trailer cable or adapter plug.
- ► Pull the button (2) until the ball neck unlocks.
  The ball neck folds up under the rear bumper.
  The indicator lamp (1) starts flashing.

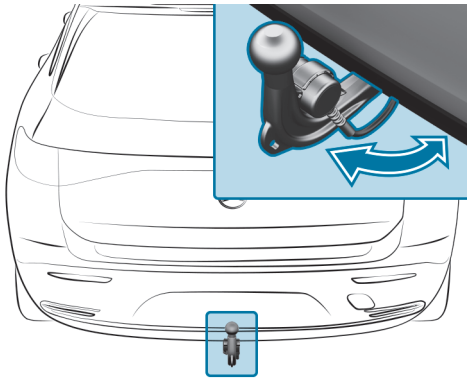

- ► Push the ball neck in the direction indicated by the arrow until it engages audibly behind the bumper.
  The indicator lamp (1) goes out and the message on the driver display disappears.

OBSERVE THE INFORMATION ON INDICATORS ON THE DRIVER DISPLAY:

- Indicator lamps and warning lamps (⟶ page 805)
- Display messages (⟶ page 750)

Coupling/uncoupling a trailer

THE TRAILER WILL BE CORRECTLY DETECTED BY THE VEHICLE ONLY IF THE FOLLOWING CONDITIONS ARE MET:

- The ball neck is extended and engages in a securely locked position.

THE TRAILER WILL BE CORRECTLY DETECTED BY THE VEHICLE ONLY IF THE FOLLOWING CONDITIONS ARE MET:

- the trailer is connected correctly
- the trailer lighting system is in working order

A CORRECTLY CONNECTED TRAILER INFLUENCES THE FUNCTIONS OF THE FOLLOWING SYSTEMS, FOR EXAMPLE:

- ESP® trailer stabilisation
- Active Lane Keeping Assist
- Parking Assist PARKTRONIC
- Active Parking Assist
- Blind Spot Assist
- Drive Away Assist

- Cross Traffic Alert
- Close-range braking
- Reversing camera
- 360° camera

COUPLING A TRAILER

NOTE
Damage to the starter battery due to full discharge

Charging the trailer battery using the power supply of the trailer can damage the starter battery.

► Do not use the vehicle's power supply to charge the trailer battery.

TRAILERS WITH A 7-PIN PLUG CAN BE CONNECTED TO THE VEHICLE WITH THE FOLLOWING ADAPTERS:

- adapter plug
- adapter cable

► Secure the vehicle against rolling away.

► Remove the cover cap from the ball head and store it in a safe place.

► Position the trailer on a level surface behind the vehicle and couple it with the vehicle.



► Open the socket cap.

► Insert the plug with the lug (1) in the groove (3) on the socket.

► Turn the bayonet coupling (2) in a clockwise direction as far as it will go.

► Allow the cap to engage.

► Secure the cable to the trailer with cable ties (when using an adapter cable only).

► Ensure that the cable exhibits ample freedom of movement for cornering manoeuvres.

IN THE FOLLOWING CIRCUMSTANCES, A MESSAGE MAY APPEAR ON THE DRIVER DISPLAY, EVEN IF THE TRAILER HAS BEEN CONNECTED CORRECTLY:

- LEDs have been installed in the trailer lighting system.
- The current level has fallen below the trailer lighting system's minimum current level (50 mA).

Accessories can be connected to the permanent power supply up to 180 W and to the power supply that is switched on via the ignition lock.

UNCOUPLING A TRAILER

WARNING
Risk of being crushed and becoming trapped when uncoupling a trailer

When uncoupling a trailer with an engaged inertia-activated brake, your hand may become trapped between the vehicle and the trailer drawbar.

- Do not uncouple trailers with an engaged overrun brake.

NOTE
Damage during uncoupling with an engaged overrun brake

The vehicle may be damaged if you uncouple with an engaged overrun brake.

- Do not uncouple trailers with an engaged overrun brake.

- Secure the vehicle against rolling away.
- Disconnect the electrical connection between the vehicle and the trailer.
- Uncouple the trailer.
- Fit the cover cap on the ball head.

Trailers with LED lighting: after uncoupling the trailer, switch the vehicle on and then off again.

Selecting a trailer type

Multimedia system:

Settings » Vehicle » Driving » Trailer type

CONFIGURING SETTINGS FOR A TRAILER

The settings on this menu make it possible to calculate a route suitable for the selected trailer and optimise the calculated arrival time.

- Select the desired trailer type.
- Select the maximum permissible speed for the selected trailer.
- **To save changes:** select Confirm.

When contact with the trailer socket is established (trailer/rear bicycle rack), a menu will automatically appear on the display.

THE FOLLOWING OPTIONS ARE AVAILABLE:

- Bicycle rack
- Small trailer
- Large trailer

Bicycle rack function

WARNING
Risk of accident due to improper handling of the bicycle rack

THE BICYCLE RACK MAY DETACH FROM THE VEHICLE IN THE FOLLOWING CASES:

- If the permissible load capacity of the trailer hitch is exceeded.
- If the bicycle rack is used incorrectly.
- If the bicycle rack is attached to the ball neck below the ball head.

FOR YOUR SAFETY AND THE SAFETY OF OTHER ROAD USERS, OBSERVE THE FOLLOWING:

- Always adhere to the permissible load capacity of the trailer hitch.
- Always observe the permissible rear axle load of the towing vehicle.
- Use the bicycle rack only for transporting bicycles.
- Always secure the bicycle rack properly by attaching it to the ball head.
- Use only bicycle racks approved by Mercedes-Benz.
- Always observe the operating instructions of the bicycle rack.

NOTE
Damage to or breakage of the trailer hitch due to unsuitable or improperly used bicycle rack.

► Only use bicycle racks approved by Mercedes-Benz properly as described below.

NOTE
Increased risk of damage to property due to folded-out ball neck

► When the trailer is not coupled or the bicycle rack is attached, fold in the ball neck or, in the case of a fully electric trailer hitch, retract the ball neck.

NOTE
The operating permit may be invalidated due to the illegal installation of trailer hitches

The installation – including retrofitting – of a non-folding or non-removable trailer hitch that even partially conceals the license plate or the lighting system is prohibited.

► Observe the applicable legal regulations for the installation of trailer hitches.

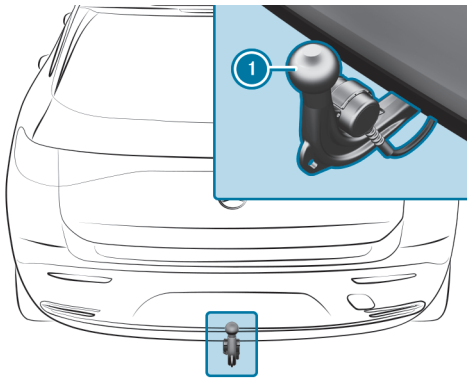

Depending on the bicycle rack's design, up to three bicycles can be transported on the bicycle rack.

When mounted by being attached to ball head (1), the maximum load capacity is 75 kg.

The maximum load capacity is calculated from the weight of the bicycle rack and the bicycle rack load.

Observe the notes on driving with a roof load, trailer or fully laden vehicle (⟶ page 294).

When using a bicycle rack, set the tyre pressure for increased load on the rear axle of the vehicle. Further information on the tyre pressure can be found in the tyre pressure table (⟶ page 655).

NOTES ON LOADING

The larger the distance between the load's centre of gravity and the ball head, the greater the load on the trailer hitch.

PLEASE THEREFORE BEAR IN MIND THE FOLLOWING NOTES:

- mount heavy bicycles as close to the vehicle as possible
- always distribute the load on the bicycle rack as evenly as possible across the vehicle's longitudinal axis

Mercedes-Benz recommends removing all detachable parts from bicycles (e.g. baskets, child seats, rechargeable batteries) before loading them onto the bicycle rack. This will improve the aerodynamic resistance and centre of gravity of the bicycle rack.

Always secure the bicycles to prevent them from moving around and check them at regular intervals to ensure that they are secure.

Do not use tarpaulins or other covers. The driving characteristics and rear view may be impaired. In addition, aerodynamic resistance and the load on the trailer hitch will increase.

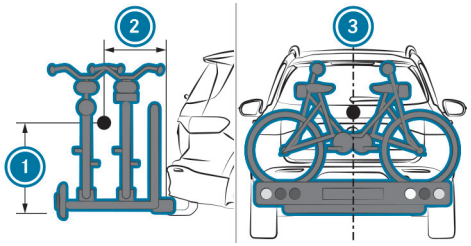

Load distribution on the bicycle rack

(1) Vertical distance between centre of gravity and ball head
(2) Horizontal distance between centre of gravity and ball head
(3) The centre of gravity is on the vehicle's centre axis

Observe the following information when you are loading the bicycle rack with up to three bicycles:

LOADING THE BICYCLE RACK

Total weight of bicycle rack and load	Max. distance	Max. distance
Up to 75 kg	420 mm	300 mm

Vehicle towing instructions

The vehicle is not suitable for the use of tow bar systems that are used for flat towing or dinghy towing, forexample. Attaching and using tow bar systems may result in damage to the vehicle. When you are towing a vehicle with tow bar systems, safe driving characteristics cannot be guaranteed for the towing vehicle or the towed vehicle. The vehicle-trailer combination may swerve from side to side.

OBSERVE THE FOLLOWING INFORMATION:

- Permitted towing methods (⟶ page 639)
- The notes on towing the vehicle with both axles on the ground (⟶ page 61)

Back to Contents

Driver display

This interactive PDF works like a website – tap or click a button to jump straight to where you want to go.
You can return here at any time via the navigation bar at the top left.

Notes on the driver display
Overview of status indicators on the driver display
Notes on range
Driver display malfunction
Operating the driver display
Driver display menus
Head-up display
Function of the power availability display

Notes on the driver display

WARNING
Risk of accident if the driver display malfunctions

if the driver display is inoperative or its functions are restricted, you will not receive information about such issues as other function restrictions, speed, current drive range and the status of the electric parking brake.

This will impair operating safety.

- ► Stop the vehicle immediately in accordance with the traffic conditions and switch it off. Do not continue driving.
- ► Consult a qualified specialist workshop.
- ► Have the vehicle transported rather than towed.

If the operating safety of your vehicle is impaired, park the vehicle in a safe place immediately. Notify a qualified specialist workshop.

ADDITIONAL AVAILABLE FUNCTIONS INCLUDE THE FOLLOWING, FOREXAMPLE:

- Various menus, e.g. for Assistance and Navigation
- Status displays for the driving systems
- Display messages

Content and settings can be changed individually in some menus (→ page 429).

Notes on range

RANGE IN GENERAL

- All ranges shown are assumptions based on various calculation bases. The actual range achieved may differ from the range displayed.
- Outside temperatures, climate control settings, vehicle interior temperatures, road conditions, driving style etc. will directly influence the achievable range.
- Pay attention to the charging prompts at all times.

RANGE ACCORDING TO PERSONAL DRIVING STYLE

- Your previous personal consumption will be taken into account when the range is being calculated.
- While the navigation system or commuter route is active, additional information regarding the route ahead may be included in the range calculation.

RANGE WITH LOW CONSUMPTION

- The maximum range shows the potential range when consumption is low, e.g. as a result of economical driving or having the air conditioning system turned off.

RANGE WITH HIGH CONSUMPTION

- The minimum range shows the range when consumption is high, e.g. as a result of a sporty driving style or having the air conditioning system turned on.
- This range is determined based on past and current consumption figures.

ELECTRICAL CONSUMPTION

- The From start and From reset consumption figures take into account all active consumer equipment when it comes to the drive system's operational readiness READY.

ⓘ If the range maximisation function is switched on, the range on the speedometer may increase depending on the potential range (→ page 301).

Driver display malfunction

WARNING
Risk of accident if the driver display malfunctions

if the driver display is inoperative or its functions are restricted, you will not receive information about such issues as other function restrictions, speed, current drive range and the status of the electric parking brake.

This will impair operating safety.

- ► Stop the vehicle immediately in accordance with the traffic conditions and switch it off. Do not continue driving.
- ► Consult a qualified specialist workshop.
- ► Have the vehicle transported rather than towed.

Identifying a driver display malfunction

A DRIVER DISPLAY MALFUNCTION CAN BE IDENTIFIED BY CHARACTERISTICS SUCHAS THE FOLLOWING:

- When the vehicle is switched on, the driver display continues to show nothing but a black screen.
- The driver display restarts.
- The content freezes.
- The display stops showing data suchas speed. Various indicator lamps and warning lamps are also displayed.

What to do in the event of a driver display malfunction

If the driver display is inoperative or its functions are restricted, stop the vehicle immediately in accordance with the traffic conditions and switch off the vehicle. The following procedure is recommended in this eventuality:

- ► Stop the vehicle in accordance with the traffic conditions.
- ► While the vehicle is at a standstill, continue to depress the brake pedal.
- ► Press the P button on the DIRECT SELECT lever.
- ► Apply the parking brake.
- ► Slowly release the brake pedal and ensure that the vehicle is secured against rolling away.
- ► Press and hold the start/stop button (→ page 337) once for roughly three seconds to switch off the drive system.
- ► Contact a qualified specialist workshop immediately.
- ► Have the vehicle transported rather than towed.

ⓘ In addition, note the additional information about switching off the vehicle (→ page 337)and the notes on transporting the vehicle (→ page 642).

Operating the driver display

WARNING
Risk of distraction from information systems and communications equipment

If you operate information systems and communication devices integrated in the vehicle when driving, you could be distracted from the traffic situation. This could also cause you to lose control of the vehicle.

- Only operate this equipment when the traffic situation permits.
- If you cannot be sure of this, stop the vehicle whilst paying attention to road and traffic conditions and operate the equipment with the vehicle stationary.

Observe the legal requirements for the country in which you are currently driving when operating the driver display.

SCROLLING ON THE MENU BAR

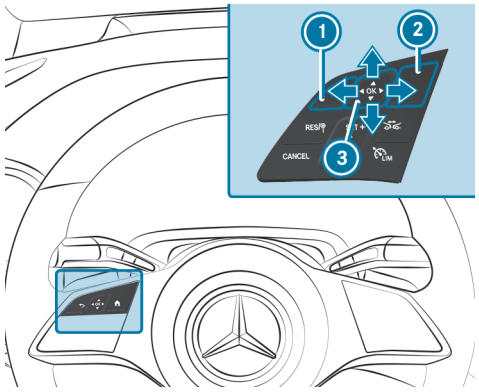

1. Back button
2. Main menu button
3. Touch Control

The control elements on the left of the steering wheel manage the content of the driver display. Swipe with your finger on Touch Control 3 to navigate vertically or horizontally through the content. Press the Touch Control to confirm your selection.

Use the tip of your thumb to operate Touch Control 3 in the most effective way. Set the sensitivity of the Touch Control on the media display (→ page 458).

- Briefly press main menu button (2).
- Select a menu by swiping to the left or right on Touch Control (3).
- **To confirm:** press Touch Control (3).

You can watch an animation on this topic via the following link:

Driver display menus

Notes on menus on the driver display

WARNING
Risk of distraction from information systems and communications equipment

If you operate information systems and communication devices integrated in the vehicle when driving, you could be distracted from the traffic situation. This could also cause you to lose control of the vehicle.

- ► Only operate this equipment when the traffic situation permits.
- ► If you cannot be sure of this, stop the vehicle whilst paying attention to road and traffic conditions and operate the equipment with the vehicle stationary.

Observe the legal requirements for the country in which you are currently driving when operating the driver display.

THE FOLLOWING MENUS CAN BE CALLED UP VIA THE MENU BAR ON THE DRIVER DISPLAY:

- Understated
- Sport
- Classic
- Navigation
- Assistance
- Offroad (vehicles with 4MATIC)
- Service

In some of the menus, you can choose between different display content in the centre display area.

In most of the menus, you can use Options to configure further settings for the menu-specific display content.

You can watch an animation on this topic via the following link:

Calling up and operating menus on the driver display

CALLING UP A MENU ON THE DRIVER DISPLAY

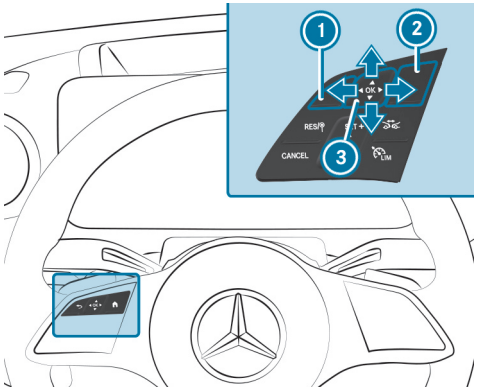

1 Back button
2 Main menu button
3 Touch Control

► Press main menu button 2 on the steering wheel.
The menu bar will be shown in the lower area of the driver display.



► Swipe to the left or right on Touch Control 3 and select a menu (e.g. the Classic menu) on the menu bar.

► **To confirm:** press Touch Control 3.

BROWSING THROUGH DISPLAY CONTENT OR LISTS

► Swipe vertically or horizontally on Touch Control 3.

ⓘ On some menus, an index character will be displayed at the right edge of the centre display content to indicate how the information has been sorted.

PRESETTING DISPLAYS

You can preset individually configured information of a menu and thus determine the standard display.

► Press Touch Control 3 until the bar is completely filled.
Answer the Set direct entry? query as follows.

► Swipe to the left on Touch Control 3 and select Yes.

► **To confirm:** press Touch Control 3.

► **To call up presettings:** press the back button 1 on the upper level of a menu.

ⓘ Pressing back button 1 on the standard display will open the previous menu.

CALLING UP OR EXITING THE OPTIONS SUBMENU

Depending on the information in the centre display content, you can configure various settings on the Options submenu.

- **To call up the Options submenu and confirm a selection:** press Touch Control (3).
- **To leave the Options submenu:** press Touch Control (1).

THE FOLLOWING FUNCTIONS MAY BE AVAILABLE ON THE OPTIONS SUB-MENU, FOR EXAMPLE:

- Navigation: selecting and adjusting zoom, route guidance and map settings
- Understated: selecting the colour selection
- Classic: resetting the trip odometer
- Classic: resetting the trip computer From start
- Classic: resetting the trip computer From reset
- Classic: resetting the ECO display values

Calling up the Classic or Understated menu

Driver display:

→ Classic

INFORMATION FOR SELECTING THE CENTRE DISPLAY CONTENT

The Classic menu shows the driver display separated into speedometer and power availability display. The area in between can be filled with various types of information.

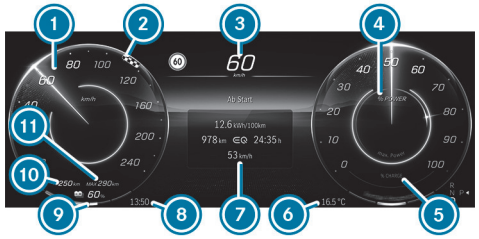

(1) Speedometer
(2) Recommended maximum speed when range monitoring and route guidance are active
(3) Digital speedometer
(4) Display area for output
(5) Display area for recuperated power (recuperation)
(6) Outside temperature
(7) Centre display content (example: trip computer)
(8) Time
(9) Charge level display
(10) Range according to personal driving style (→ page 424)
(11) Range at low consumption (→ page 424)

THE FOLLOWING INFORMATION CAN BE SHOWN IN THE CENTRE DISPLAY CONTENT (7):

- Trip and total distance
- Distance From start and From reset
- ECO display
- Range trend display
- Current consumption
- ATTENTION ASSIST
- Audio

- Navigation (with changing navigation instructions)

THE FOLLOWING VALUES WILL BE DISPLAYED FOR TRIP COMPUTER (7):

- Distance covered in electric mode
- Electric energy consumption
- Driving time
- Average speed

► Swipe upwards or downwards on the Touch Control and select the display content.

OBSERVE THE FOLLOWING NOTES ON THE CLASSIC MENU:

- Recommended maximum speed (2) ensures that the destination will be reached with route guidance active. The state of charge that is desired and entered will be taken into account. If it becomes necessary to limit the vehicle's speed to reach the destination safely with the specified state of charge, the recommended maximum speed will be displayed on the speedometer. A message will also appear on the driver display.

  Please note that despite recommended maximum speed (2), the maximum permissible speed must not be exceeded.
- Display (5) will change when intelligent recuperation is activated (⟶ page 298).

CHANGING THE RADIO STATION OR TRACK ON THE STATION OR TRACK LIST

You can change radio stations or tracks on the station or track list in the centre display content with audio information.

THE FOLLOWING WILL BE ADJUSTED IN THE MBUX MULTIMEDIA SYSTEM:

- Configuring the radio station and track lists
- Switching between tracks
- Setting the frequency band

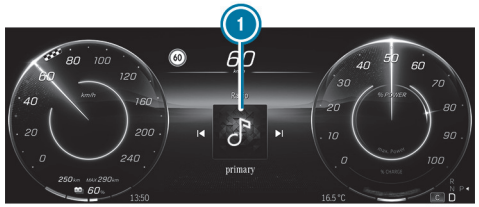

(1) Track list in the centre display content (example)

► **To change radio stations or tracks:** swipe left or right on the Touch Control and select a radio station or track on the station or track list (1).

ⓘ The radio station or track displayed when the vehicle is restarted depends on the user profile used for the previous trip.

CHANGING COLOUR SETTINGS ON THE UNDERSTATED MENU

► Call up the Understated menu via the driver display menu bar.

► **To call up the colour list:** press the Touch Control.

► **To select colour settings:** swipe upwards or downwards on the left-hand Touch Control and select the colour setting.

► Press the Touch Control to confirm.

► **To exit the colour list:** press the back button ⮌.

Depending on the equipment, the selected colour adjustment will be adopted for the ambient lighting and the MBUX multimedia system. When you select the Understated menu on the driver display, the content in the MBUX multimedia system will also be reduced.

Calling up the Service menu

Driver display:

→ Service

The current status of the vehicle is shown on the Service menu.

- **To call up the menu:** press the Touch Control.
- **To select:** swipe upwards or downwards on the Touch Control and select the display content Service.

THE FOLLOWING DISPLAY CONTENT IS AVAILABLE IN THE SERVICE MENU (EQUIPMENT-DEPENDENT):

- Information about how many messages are in the message memory
- Tyre pressure:
  - Checking the tyre pressure with the tyre pressure monitor (→ page 656)
  - Restarting the tyre pressure monitor (→ page 656)
- ASSYST PLUS: calling up the service due date (→ page 602)
- Temperature display (high-voltage battery, front and rear high-voltage motors)

THE FOLLOWING FUNCTIONS ARE AVAILABLE ON THE OPTIONS SUBMENU:

- Tyre pressure (→ page 656)
- Message memory (→ page 750)

Calling up the Assistance menu

Driver display:

→ Assistance

The Assistance menu displays various driver assistance systems and navigation instructions.

- **To call up the menu:** press the Touch Control.
- **To select:** swipe upwards or downwards on the Touch Control and select the display content Assistance.
- Press the Touch Control.



Active Distance Assist DISTRONIC indicator on the assistant display (example)

THE FOLLOWING DISPLAYS MAY VARY DEPENDING ON THE DRIVING SITUATION:

- The navigation instructions in the left-hand display section

- The traffic light view in the right-hand display section
- The display of the driver assistance systems
- The level of detail on the assistant display

THE FOLLOWING STATUS DISPLAYS ARE AVAILABLE ON THE ASSISTANT DISPLAY:

- Green: pedestrian detection active
- Grey: pedestrian detection activated, but no person detected
- Green radar waves next to vehicle: Blind Spot Assist activated and ready for operation
- Grey radar waves next to vehicle: Blind Spot Assist activated but not ready for operation

THE CONTENT ON THE ASSISTANT DISPLAY WILL ADAPT TO THE FOLLOWING SITUATIONS:

- Number of lanes detected
- Change of direction, e.g. lane change
- Current road conditions
- Road users detected

ⓘ The assistant display will not show other detected obstacles with the exception of road users.

THE FOLLOWING FUNCTIONS ARE AVAILABLE ON THE OPTIONS SUBMENU:

- Starting route guidance
- With active route guidance: end route guidance
- Call up previous destinations and favourites
- Start new route guidance to a recent destination
- Start new route guidance to a favourite

Calling up the Sport menu

Driver display:

→ Sport

The Sport menu shows information about electric mode.

► **To call up the menu:** press the Touch Control.

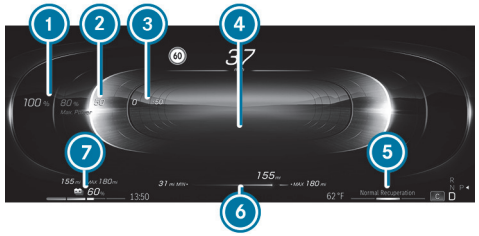

1. Maximum available output
2. Current output
3. Recuperative braking
4. G-force display
5. Selected recuperation level
6. Range trend display
7. State of charge of the high-voltage battery

The range indicator on the driver display will vary depending on the menu selected.

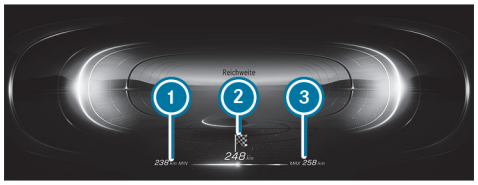

Display content for range

1. Range at high consumption (⟶ page 424)
2. Range according to personal driving style (⟶ page 424)
3. Range at low consumption (⟶ page 424)

Calling up the off-road menu

Driver display:

↳ Offroad

AMONG OTHER THINGS, THE MENU SHOWS THE FOLLOWING INFORMATION:

- Steering angle
- Elevation above sea level
- Compass with direction of travel
- Coordinates

► **To call up the menu:** press the Touch Control.

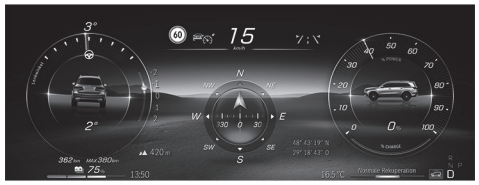

Calling up the Navigation menu

Driver display:

↳ Navigation

The Navigation menu shows the relevant map with navigation instructions.

► **To call up the menu:** press the Touch Control.

CHANGING THE SCALE OF THE SELECTED MAP VIEW



1. Distance to the change of direction
2. Road to which the change of direction leads
3. Traffic incident indicator
4. Currently selected route
5. Indicator showing vehicle's current position
6. Change-of-direction symbol
7. Recommended lane (white)

8 Lane not recommended (grey)
9 Current lane

ⓘ The level of detail in the navigation instructions in the left-hand display section may vary.

► **To zoom in and out on the map directly:** swipe upwards or downwards on the Touch Control.

ⓘ If you do not operate anything in Autozoom, the system will reset the scale of the map view already selected after a short time. You can set the map scale permanently in the MBUX multimedia system (⟶ page 525).

THE FOLLOWING FUNCTIONS ARE AVAILABLE ON THE OPTIONS SUBMENU:

- With active route guidance: end route guidance
- Select route guidance
- Map settings

ⓘ If the current route guidance is ended on the Navigation menu of the driver display, it will also be ended in the MBUX multimedia system.

On the Options submenu, you can use other functions in the Destinations and Map settings categories.

YOU CAN USE THE FOLLOWING FUNCTIONS IN THE DESTINATIONS CATEGORY:

- Call up previous destinations and favourites
- Start new route guidance to a favourite

ⓘ The two options Work and Home will be displayed in Favourites even if no address is stored.

YOU CAN USE THE FOLLOWING FUNCTIONS IN THE MAP SETTINGS CATEGORY:

- Activate auto zoom
- Set the map view, satellite view and route overview.

THE FOLLOWING MAP VIEWS ARE AVAILABLE ON THE NAVIGATION MENU:

- Entire route
- 2D direction of travel
- 2D north-up
- 3D map

Head-up display

Function of the head-up display

The head-up display projects a variety of content into the driver's field of vision:

YOU CAN USE THE HEAD-UP DISPLAY MENU BAR TO SELECT DIFFERENT CONTEXTS, E.G.:

- Minimal
- Sport
- Standard
- Offroad (vehicles with 4MATIC)
- Settings
- Head-up display on/off

The following image shows an example of the head-up display. You can choose what content is displayed (⟶ page 437).

HEAD-UP DISPLAY CONTENT WITH NAVIGATION (6X2°)

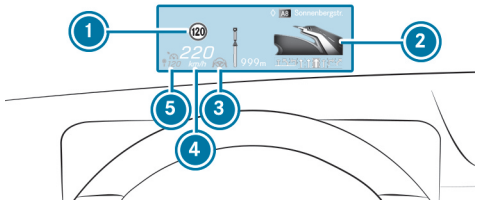

1. Detected instructions and traffic signs
2. Navigation instructions (distance to the next route event)
3. Active Steering Assist status
4. Current speed
5. Set speed in the driving system (e.g. Active Distance Assist DISTRONIC)

SYSTEM LIMITS

VISIBILITY IS INFLUENCED BY THE FOLLOWING CONDITIONS IN PARTICULAR:

- Seat position
- Image position setting
- Light conditions
- Wet road surfaces
- Objects on the display cover
- Polarisation in sunglasses

You can watch an animation on this topic via the following link:

Operating the head-up display

SELECTING DISPLAY CONTENT OF THE HEAD-UP DISPLAY VIA THE MENU BAR OF THE DRIVER DISPLAY

- Press the main menu button [⌂].
- **To select the menu bar of the head-up display:** swipe upwards on the Touch Control.



SWITCHING BETWEEN DISPLAY CONTENT ON THE HEAD-UP DISPLAY

- Swipe to the left or right on the Touch Control.

  A preview of the selected display content will appear on the head-up display.
- **To confirm:** press the button [OK].

SWITCHING BACK TO THE DRIVER DISPLAY

- Press the button [↩] or [⌂].

SETTING THE POSITION AND BRIGHTNESS

- Swipe to the left or right on the Touch Control and select Settings on the menu bar of the head-up display.
- Press the Touch Control.

  The current position and brightness settings will be displayed as graphics on the head-up display as well as on the driver display.
- **To adjust the position:** swipe upwards or downwards on the Touch Control.
- **To adjust the brightness:** swipe to the left or right on the Touch Control.

  The settings configured for position and brightness will be saved automatically.
- Press either button [↩] or [OK] to exit the settings.

ⓘ Brightness of the head-up display switches automatically between day and night mode according to the ambient light.

Switching the head-up display on/off

Driver display:



SWITCHING ON

- Swipe upwards on the Touch Control.
- Press Touch Control [OK].

SWITCHING OFF

- Swipe upwards on the Touch Control.
- Swipe on the Touch Control and select Head-up display.
- Press Touch Control [OK].

Switching the head-up display on/off in the multimedia system

Multimedia system:



SWITCHING THE HEAD-UP DISPLAY ON/OFF

- Select Head-up display.

  The head-up display is activated or deactivated.

Function of the power availability display

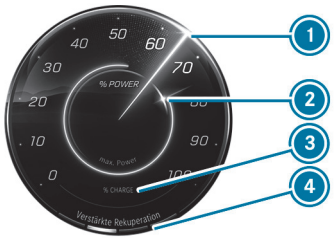

1. Current output
2. Available operating energy output
3. Recuperated energy (recuperation)
4. Recuperation level set

The maximum operating energy output is available in normal operating mode.

IN THE FOLLOWING CASES, THE OPERATING ENERGY OUTPUT AVAILABLE MAY DEVIATE FROM THE MAXIMUM VALUE:

- When the outside temperatures are very high or low
- In the event of very high output requests over an extended period of time
- When the high-voltage battery's state of charge is very low
- When the drive system is malfunctioning

The values displayed serve only as guidance. The operating energy output value displayed may deviate from the actual value.

When maximum recuperated power 3 is reached, the additional desired deceleration will be set via the brake control system. Also brake with the service brake if necessary.

Overview of status indicators on the driver display

The status indicators for the driving systems and driving safety systems can be found in display sections (1) to (4).

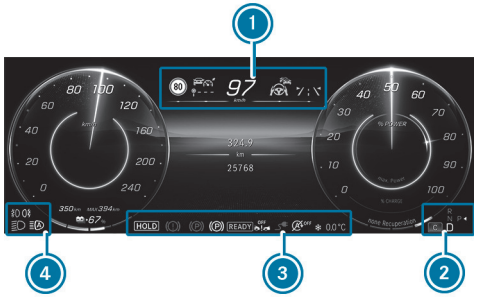

The number, position and presentation of the status indicators on the driver display depend on which systems are activated or deactivated.

- Pedestrian detection (on assistant display only)
- Active Parking Assist is available (⟶ page 405)
- Active Parking Assist has detected a parking space (⟶ page 405)
- Parking Assist PARKTRONIC deactivated (⟶ page 402)
- Cruise control (⟶ page 357)
- LIM Limiter (⟶ page 357)
- Active Distance Assist DISTRONIC (⟶ page 361)
- Specified distance for Active Distance Assist DISTRONIC (⟶ page 361)
- Active Brake Assist deactivated (⟶ page 378)
- Active Brake Assist impaired or inoperative (⟶ page 378)
- Active Steering Assist (⟶ page 370)
- Active Lane Keeping Assist (⟶ page 389)
- Active Blind Spot Assist (on assistant display only)
- Haptic accelerator pedal
- HOLD HOLD function (⟶ page 353)
- Adaptive Highbeam Assist (⟶ page 266)
- 120 km/h! Maximum permissible speed exceeded (for certain countries only)
- Active Stop-and-Go Assist
- Slippery road surface warning

Vehicles with Speed Limit Assist: detected information and traffic signs
(⟶ page 379)

Vehicles with Traffic Sign Assist: detected information and traffic signs
(⟶ page 382)

Important information from other driving systems may briefly appear over the displayed traffic signs.

Back to Contents

MBUX Voice Assistant

This interactive PDF works like a website – tap or click a button to jump straight to where you want to go.
You can return here at any time via the navigation bar at the top left.

Notes on operating safety
Operation
Using MBUX Voice Assistant effectively
Essential voice commands

Notes on operating safety

FOR YOUR OWN SAFETY, ALWAYS OBSERVE THE FOLLOWING POINTS WHEN OPERATING MOBILE COMMUNICATIONS EQUIPMENT AND ESPECIALLY YOUR VOICE CONTROL SYSTEM:

- Observe the legal requirements for the country in which you are driving.
- If voice control is used in an emergency situation, commands may be less easily recognised due to a change in voice.
- Familiarise yourself with the voice control system functions before starting the journey.

The voice control system does not replace the Owner's Manual.
The answers from the voice control system do not provide the complete scope of information contained in the Owner's Manual. The voice control system also does not give detailed warning or damage information. Therefore read the Owner's Manual so that you are fully informed about the functions and the safe operation of the vehicle.

Operation

Function of the MBUX Voice Assistant

You can watch an animation on this topic via the following link:

Using the MBUX Voice Assistant, vehicle functions and various areas of the MBUX multimedia system can be operated by voice input, e.g. Navigation or Telephone. The MBUX Voice Assistant is operational about half a minute after switching on the vehicle and can be operated from all seats (depending on the special equipment).

Conducting a dialogue

Requirements:

- Voice activation is activated in the multimedia system (⟶ page 445).

STARTING A DIALOGUE

► Say Hey Mercedes to activate the MBUX Voice Assistant.

or

► Press the button on the multifunction steering wheel.

A wave appears in the MBUX multimedia system. The dialogue can be started.

For the dialogue with the MBUX Voice Assistant, you can use complete sentences of colloquial language as voice commands. Voice activation can also be combined directly with a voice command, e.g. Hey Mercedes, how warm is it outside?

INTERRUPTING THE DIALOGUE

► During the dialogue say Pause.

The dialogue is interrupted.

► Say Hey Mercedes to continue the dialogue.

CHANGING DIALOGUE LEVEL

► During the dialogue, say Back.

The MBUX Voice Assistant jumps back to the previous dialogue step.

NAVIGATING IN THE SELECTION LIST

If a voice command does not achieve a clear result, a selection list is shown.

► Say the line number or the content to select an entry or to have further details shown.

► Say Next page or Previous page to browse the selection list.

CALLING UP HELP

► **Information on the MBUX Voice Assistant:** call up the following app in the multimedia system: Hey Mercedes Info.

► **Current application:** say Help.

You will receive suggestions and information about operation of MBUX Voice Assistant for the current application.

- **Specific function:** call up the voice command for the required function, for example with Hey Mercedes, I need help with the radio.
- **Digital Owner's Manual:** say Show me the Owner's Manual.

  The full extent of the Digital Owner's Manual is available on the media display when the vehicle is stationary.

Overview of the operable functions of the MBUX Voice Assistant

YOU CAN USE THE MBUX VOICE ASSISTANT TO OPERATE THE FOLLOWING FUNCTIONS DEPENDING ON THE VEHICLE EQUIPMENT:

- Telephone
- Text message and e-mail
- Navigation
- Radio and media
- Vehicle functions
- Online functions

Full functionality of the voice control system is only available for you with activation of online voice control (⟶ page 445).

Information on the language setting

You can change the language of the MBUX Voice Assistant via the system language settings (⟶ page 480). If the set system language is not supported by the MBUX Voice Assistant, English will be selected.

Setting functions of MBUX Voice Assistant using the multimedia system

Multimedia system:

Settings » System » Voice assistant

SWITCHING VOICE ACTIVATION OF MBUX VOICE ASSISTANT ON OR OFF

- Select Hey Mercedes.

  When the function is active, the Hey Mercedes voice command can activate the dialogue.

SWITCHING DIRECT COMMANDS ON OR OFF

- Select ⚙.
- Activate or deactivate the function.

  If the function is active, some commands can be used without saying Hey Mercedes, for example Next track.

SWITCHING VOICE ACTIVATION FOR INDIVIDUAL SEATS ON OR OFF

- Select ⚙.
- Switch the function for the desired seats on or off.

SWITCHING PROACTIVITY ON OR OFF

- Select Proactivity.
- Select the desired situation, e.g. Activate your profile or Don't forget your phone.

  When the function is active, the voice assistant proactively provides information in specific situations.

ACTIVATING OR DEACTIVATING ONLINE VOICE CONTROL

Online voice control is activated at the factory.

- Select Online recognition.
- Activate or deactivate the function.

  If the function is switched on and a Mercedes-Benz user account is linked to the vehicle, additional results are available through external information, e.g. information on points of interest. By clicking the symbol in the wave, more information about the online voice control can be displayed.

ACTIVATING OR DEACTIVATING CONTACTS FOR ONLINE USE

- Select Contact upload for online recognition.

  When the function is active, contacts will be found more easily and accurately using voice input.

Using MBUX Voice Assistant effectively

Notes on optimum use of the MBUX Voice Assistant

- The MBUX Voice Assistant is operational half a minute after switching on the vehicle and can be operated from all seats, depending on the equipment installed. The system recognises from which seat the command was spoken and performs actions according to the seat position.
- When a dialogue is ended, the MBUX Voice Assistant continues to be active for as long as the wave is displayed in the multimedia system. You can say another voice command without saying **Hey Mercedes**.
- Using the direct command **Change language to English**, the system language can be changed to English without **Hey Mercedes**. Direct commands must be activated for this.
- If a user profile has been stored and is active, the MBUX Voice Assistant can make suggestions based on the habits of the user.

  Say **Hey Mercedes, load my personal profile**, to activate the profile. The user's voice must first be taught in by the system and assigned to a profile.

  Further information on user profiles (⟶ page 465).
- With the MBUX Voice Assistant, incoming calls can be accepted or rejected without the keyword **Hey Mercedes**.

Information on the MBUX online voice assistant

The online voice control facilitates recognition and thanks to external information makes additional results available.

Therefore, Mercedes-Benz recommends that you activate online voice control (⟶ page 445).

You will need a Mercedes-Benz user account for this. If you do not yet have a user account you must create one and connect it with your vehicle (⟶ page 565).

Then call up your Mercedes-Benz user account. The Mercedes-Benz Digital Extras are displayed and can be activated (⟶ page 566).

By clicking on the symbols displayed in the wave, further information on the online status is displayed.

WHEN ONLINE VOICE CONTROL IS ACTIVE, ADDITIONAL FUNCTIONS ARE AVAILABLE SUCH AS:

- Weather
- General knowledge
- Public holidays and school holidays
- Smart home
- Messages
- Time, date and time zones

- Pocket and currency calculator
- Football results and fixture lists
- Share prices
- Calendar
- ChitChat
- Horoscope
- Geo Quiz
- Giving feedback

The availability of these functions is country and equipment-dependent.

Text content is taken from Wikipedia in accordance with the CC BY-SA 3.0 licence.

Essential voice commands

Notes on voice commands

It is not necessary to use exact voice commands to call up a specific function. The MBUX Voice Assistant also understands you when you use your colloquial speech. Some examples are listed below. For some languages however these examples are only available to a limited extent.

EXAMPLES OF VOICE COMMANDS:

- Navigation (⟶ page 449)
- Telephone (⟶ page 449)
- Radio and TV (⟶ page 450)
- Media player (⟶ page 451)
- Messages (⟶ page 451)
- Vehicle functions (⟶ page 451)
- Online functions (⟶ page 452)

Examples of navigation voice commands

You can operate the navigation system using the MBUX Voice Assistant. The following list offers just a small selection of the possible navigation commands. You will receive additional suggestions if you say Help for navigation.

- Drive me home.
- Where is the nearest service station?
- Is there a service area along the route?
- Set Covent Garden as intermediate destination.
- Cancel the route guidance.
- Show my last destination.
- I want to buy juice.
- Search for an Asian restaurant, but not Japanese, in South London.

Examples of telephone voice commands

You can operate phones connected with the MBUX multimedia system using the MBUX Voice Assistant. The following list offers just a small selection of the possible telephone commands. You will receive additional suggestions if you say Help for phone.

- Call Peter Miller on the mobile phone.
- Dial 0711 17 0.
- Call my father.
- Accept call
- Reject call
- Search for the contact Peter Miller.
- Switch to address book
- Show me the incoming calls.
- Switch phone

Examples of radio and TV voice commands

Depending on the vehicle equipment, you can operate the radio and TV using the MBUX Voice Assistant. The following list offers just a small selection of the possible radio or TV voice commands. You will receive additional suggestions if you say Help for radio or Help for TV.

- Play the radio station Heart FM.
- Next station.
- Previous station.
- Show me the list of radio stations
- Save the station
- What am I listening to?

Overview of radio voice commands

Radio voice commands can also be used when the radio application runs in the background and another application is visible in the foreground. The following list offers just a small selection of the possible radio voice commands. You will receive additional suggestions if you say Help for radio.

RADIO VOICE COMMANDS

Voice command	Colloquial example	Function
Radio station <station name>	I'd like to select the radio station "Cool FM"	Selects the radio station.
Radio frequency <Frequency>	Go to station/radio frequency "eighty seven point five megahertz"	Enters a radio frequency, e.g. in the FM frequency band.
Next radio station	Call up the next radio station	Calls up the next radio station from the station list.
Previous station	Switch to the last radio station/to the previous program	Switches to the previous radio station.
Save radio station	Please save the radio station	Saves the radio station currently playing.
Show radio station list	Show me the list of all radio stations, please	Shows the radio list with the radio stations that can currently be received.
Read out channel list	I'd like to listen to the station list, please	Reads out the radio list with the radio stations that can currently be received.
Traffic information on	Switch on the traffic info	Switches on traffic announcements.
Traffic information off	I'd like to switch off traffic info	Switches off traffic announcements.
Radio info on	I want you to turn on additional radio station text	Switches on the radio text information for the radio station currently playing.

Voice command	Colloquial example	Function
Radio info off	I want you to turn off additional radio station text	Switches off the radio text information for the radio station currently playing.
Change to radio favourites	Please show me the list of all favourite radio stations	Shows the favourites with the saved radio stations.

Examples of media voice commands

You can operate connected media sources and online music using the MBUX Voice Assistant. The following list offers just a small selection of the possible media voice commands. You will receive additional suggestions if you say Help for media or Help for player.

- Play Michael Jackson.
- Play "Yellow Submarine' by the Beatles.
- Next track.
- Previous track.
- Repeat this track.
- Switch on random playback.
- Mute the music.
- Switch to USB.

Examples of message voice commands

Messages can be created, edited and listened to using the MBUX Voice Assistant. The following list offers just a small selection of the possible message voice commands. You will receive additional suggestions if you say Help for messaging.

- Write a text message to Jane Doe: When will the next meeting take place?
- Show me my new e-mails.
- Write an e-mail to Jane Doe.
- Read me my new text messages.
- Show all new text messages.
- Write an e-mail to John Doe in English

Examples of vehicle voice commands

You can operate vehicle settings and vehicle functions using the MBUX Voice Assistant. The following list offers only a small selection of possible vehicle-specific voice commands and depends on the vehicle equipment and the language set.

ⓘ If no seat is mentioned for commands, the action is carried out automatically for the seat from which the command was spoken or for the function which is closest to that seat.

- Switch the seat heating to level 2.
- My feet are cold.
- Start the Refresh programme.
- Switch the massage programme on.
- I would like to set the ambient light to blue
- Switch on the reading lamp.
- Open all the windows.
- Tell me my next service appointment

- How warm is it outside?
- Show me the charging options
- Select the Home charging programme.
- Set the charging limit to 80%.
- To what percentage will the battery be charged?
- Set my weekend departure time for 10 a.m..
- With how many kilowatts will the battery be charged?
- How much longer do I have to charge?

INFORMATION ABOUT THE VEHICLE CAN ALSO BE REQUESTED:

- Information about individual items of the vehicle equipment
  - Hey Mercedes, which massage programmes do you have?
  - Hey Mercedes, do I have Blind Spot Assist?
  - Hey Mercedes, where is the warning triangle?
- Information about functioning of the systems and components installed in the vehicle
  - Hey Mercedes, what is DISTRONIC?
  - Hey Mercedes, what do I need ESP for?
  - Hey Mercedes, what is MBUX?
- Information about operating the systems and components installed in the vehicle
  - Hey Mercedes, how do I connect my smartphone?
  - Hey Mercedes, how can I turn on the main beam headlamps?
  - Hey Mercedes, how do I stop the ionisation function?

Examples of online functions

Depending on the country, language and vehicle equipment, additional functions are available when online voice control is active. The system accesses external information and can, as a result, answer general knowledge questions and make calculations, for example.

- Is the sun shining in Manchester?
- Is it raining at my destination?
- What are the skiing conditions on the Zugspitze?
- What's the time in Sydney now?
- In which country do you pay with dollars?
- How many Swiss franks make 25 euros?
- How long now until the holidays?
- What day is it tomorrow?
- What is 20 % of 29?
- What does my horoscope say?
- What is the price of Mercedes-Benz Group shares?
- Let's play Geo Quiz.
- I'm bored.
- Who is the current prime minister?
- What do you know about the Globe Theatre in London?
- Who painted the picture "The Scream"?
- What's the status in the Premier League?
- Create a calendar entry tomorrow at 9 am.
- What's my next task?
- Tell me a joke.
- How many languages do you speak?
- What is your favourite animal?

- Are there any updates?
- Is the light still on in the kitchen?
- Switch off all the devices in my house.
- Please set the temperature in the living room to 24 degrees.
- I'd like to give you feedback.

Direct command examples

With direct commands, some functions can be operated without first saying the voice command **Hey Mercedes**. To use direct commands, the function must be activated in the multimedia system (→ page 445).

- Next TV channel
- Previous TV channel
- Next radio station
- Previous radio station
- Next station
- Previous station
- Next track
- Previous track
- Start dashcam recording
- Stop dashcam recording
- Show the map
- 3D map
- 2D map
- Align map to north
- Align map in direction of travel
- Show all routes
- Show traffic
- Navigate to work
- Navigate home
- Repeat driving instruction
- Cancel route guidance
- Change language to English

MBUX multimedia system

This interactive PDF works like a website – tap or click a button to jump straight to where you want to go.
You can return here at any time via the navigation bar at the top left.

Overview and operation
System settings
Drive system settings
Fit & Healthy
Navigation and traffic
Telephone
Online and Internet functions
Media
Radio
Sound

Overview and operation

Overview of the MBUX multimedia system

WARNING
Risk of distraction from information systems and communications equipment

If you operate information systems and communication devices integrated in the vehicle when driving, you could be distracted from the traffic situation. This could also cause you to lose control of the vehicle.

- ► Only operate this equipment when the traffic situation permits.
- ► If you cannot be sure of this, stop the vehicle whilst paying attention to road and traffic conditions and operate the equipment with the vehicle stationary.

You must observe the legal requirements for the country in which you are currently driving when operating the multimedia system.

NOTE
Increased surface temperature due to direct sunlight on the central display

The surface of the central display is very dark.

If the display is exposed to direct sunlight, the surface can become very hot.

- ► If the central display has been exposed to direct sunlight, allow it to cool down before touching it for a long time.

THE FUNCTIONS OF YOUR MBUX MULTIMEDIA SYSTEM MAY DIFFER AND DEPEND ON THE FOLLOWING FACTORS:

- Market
- National version
- Technical conditions

Functions and Digital Extras provided by Mercedes-Benz and/or third-party providers may no longer be available when the contractual period expires. This may also be due to technical prerequisites. There is therefore no entitlement to the continuous provision of functions and Digital Extras.
The described functions may be modified, optimised and adapted after the time of going to press.

Mercedes-Benz therefore reserves the right to introduce changes to functions and Digital Extras.
For these reasons, descriptions and depictions relating to the MBUX multimedia system may, in some cases, differ for your vehicle.

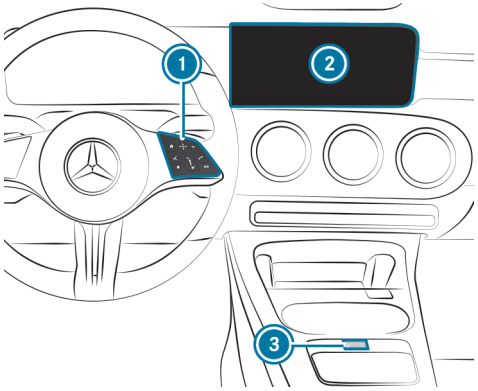

1. Touch Control and control panel for the MBUX multimedia system
   MBUX stands for Mercedes-Benz User Experience.
   - Operating Touch Control (⟶ page 457)
2. Media display with touch functionality
   - Home screen overview (⟶ page 457)
   - Operating the touchscreen (⟶ page 458)
3. Controller
   Press and hold: switches the MBUX multimedia system or media display on or off
   Press briefly: switches the mute function on/off
   Turn: adjusts the volume

ⓘ Alternatively, the MBUX Voice Assistant allows voice dialogue. Operation with natural speech starts after the wake-up call "Hey Mercedes" (⟶ page 444). You can start a voice navigation, for example.

ⓘ If the vehicle is fitted with the MBUX Interior Assistant, selected functions of the multimedia system can be operated contact-free. In addition, the reading light or search light can be switched on or off contact-free.

Numerous apps and Digital Extras are available to you. These can be called up via the home screen.

You can conveniently call up your favourites using the ★ button on the steering wheel. Quick-access in the home screen and in the applications serve to select functions more quickly.

If you use the learning function of the multimedia system, you will receive suggestions during operation of the most probable navigation destinations, media sources, radio stations and contacts. The configuration of the suggestions is completed in the system settings. You can compile your user profile from various vehicle settings and settings of the multimedia system. Some functions and Digital Extras are protected by a PIN. You can teach in biometric procedures to identify yourself with these instead of the four-digit Mercedes me ID PIN.

The Notifications Centre collects incoming notifications, e.g. about an available software update. Depending on the type of notification it offers various actions. The call is made via the Control Centre.

With the global search, you can search on the home screen via categories, e.g. in the navigation, and on the Internet.

ANTI-THEFT PROTECTION
This device is equipped with technical provisions to protect it against theft. More detailed information about anti-theft protection can be obtained at a qualified specialist workshop.

Home screen overview

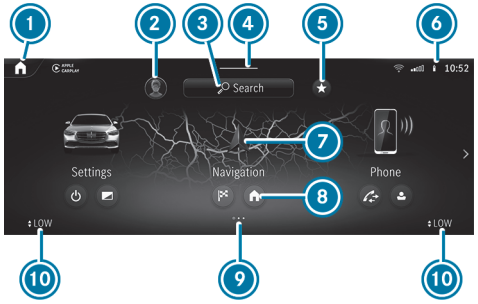

1. On the home screen: displays the first three applications
   In other displays: calls up the home screen
2. Calls up user profile settings and switches user
3. Using the global search
4. Calls up the Control Centre: pull the bar down
5. Calls up favourites
6. Displays in the status line
7. Calls up applications
8. Quick-access to application
9. Index points for selected display area
10. Calling up the air-conditioning menu

THE FOLLOWING FUNCTIONS ARE CALLED UP IN THE CONTROL CENTRE:

- Notifications Centre
- Favourites
- Vehicle quick-access

In the image, the applications are arranged as a carousel. Pressing and holding on ⌂ arranges the applications in a grid. This view is also used by a smartphone, for example.

Touch Control

OPERATING TOUCH CONTROL (MBUX MULTIMEDIA SYSTEM)

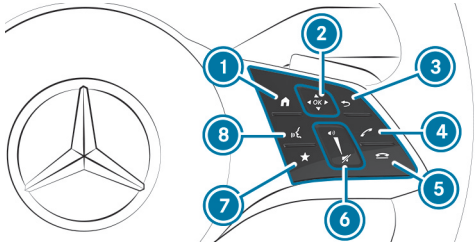

1. ⌂ Shows the home screen
2. Touch Control
   ◀ ▲ ▶ ▼ Swipe in the direction of the arrow (navigate)
   OK Press (confirm)
3. ↩ Returns to the previous display
4. 📞 Makes or accepts a call
5. 📵 Rejects or ends a call
6. To increase volume: swipe upwards
   To reduce volume: swipe down
   🔇 To switch off the sound: press

7 ★ Calls up favourites
8 Starts the MBUX Voice Assistant

ⓘ To operate Touch Control 2 in the most effective way, use the tip of your thumb if possible.

You can navigate through menus and lists via the touch-sensitive surface of Touch Control 2 using **a single-finger swipe**, e.g.:

- **To enter a character:** select a character using the keyboard and press on Touch Control 2.
- **To select a menu option:** scroll in a list and press Touch Control 2.
- **To move the digital map:** swipe in any direction.

SETTING THE SENSITIVITY FOR TOUCH CONTROL

Multimedia system:

Settings » System » Control elements » Touch Control sensitivity

- Select Fast, Medium or Slow.

SETTING ACOUSTIC OPERATIONAL FEEDBACK FOR ALL CONTROL ELEMENTS

Multimedia system:

Settings » System » Control elements » Acoustic feedback

The function is supported by the selection in a list.

- Set Off, Unleaded or Loud.

  If the function is activated you will hear a clicking sound when selecting control elements or when scrolling in a list. When the beginning or end of the list is reached you will hear another clicking sound.

Touchscreen

OPERATING THE TOUCHSCREEN

TAPPING

- **To select a menu item or entry:** tap on a symbol or an entry.
- **To increase the map scale:** tap twice quickly with one finger.
- **To reduce the map scale:** tap with two fingers.
- **To enter characters with the keypad:** tap on a button.

SINGLE-FINGER SWIPE

- **To navigate in menus:** swipe up, down, left or right.
- **To move the digital map:** swipe in any direction.
- **To use handwriting to enter characters:** write the character with one finger on the touchscreen.

TWO-FINGER SWIPE

- **To zoom in and out of the map:** move two fingers together or apart.
- **To enlarge or reduce the size of a section of a website:** move two fingers together or apart.
- **To turn the map:** turn anti-clockwise or clockwise using two fingers.

THREE-FINGER SWIPE

- **To call up the home screen:** swipe up with three fingers in an application.

TOUCHING, HOLDING AND MOVING

- **To move the map:** touch the touchscreen and move your finger in any direction.

- **To set the volume on a scale:** touch the touchscreen and move your finger to the left or right.

TOUCHING AND HOLDING

- **To save the destination in the map:** touch the touchscreen and hold until a message is shown.
- **To call up a global menu in the applications:** touch the touchscreen and hold until the Options menu appears.

Overview of the lower control panel in the centre console



1 Turn: adjusts the volume
Press: switches sound on or off
2 Fingerprint sensor

MBUX Interior Assistant

NOTES ON LASERS AND LASER CLASSIFICATION

WARNING
Risk of injury from the camera's laser radiation

This product uses a classification 1 laser system. If the housing is opened or damaged, laser radiation may damage your retina.

- Do not open the housing.
- Always have maintenance work and repairs carried out by a qualified specialist workshop.

This device is a class 1 laser product in accordance with IEC 60825-1:2014 and DIN EN 60825-1:2014.

WARNING
Risk of distraction from information systems and communications equipment

If you operate information systems and communication devices integrated in the vehicle when driving, you could be distracted from the traffic situation. This could also cause you to lose control of the vehicle.

- Only operate this equipment when the traffic situation permits.
- If you cannot be sure of this, stop the vehicle whilst paying attention to road and traffic conditions and operate the equipment with the vehicle stationary.

You must observe the legal requirements for the country in which you are currently driving when operating the multimedia system.

OVERVIEW OF THE MBUX INTERIOR ASSISTANT

If the vehicle is fitted with the MBUX Interior Assistant, selected functions of the multimedia system can be operated contact-free. In addition, the reading light or search light can be switched on or off contact-free.

The MBUX Interior Assistant can differentiate between driver and front passenger interactions.

The MBUX Interior Assistant recognises specific hand movements and a pose.

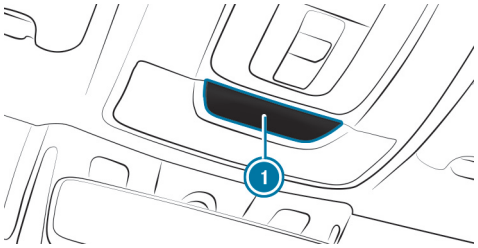

Example of camera installation location

Camera (1) is located in the overhead control panel.

SYSTEM LIMITS, DISPLAY MESSAGES AND NOTES FOR RECTIFICATION

THE SYSTEM MAY BE IMPAIRED OR MAY NOT FUNCTION IN THE FOLLOWING SITUATIONS:

- The camera in the overhead control panel may heat up due to operating conditions. As a result the camera may switch off temporarily, particularly during longer periods of operation and at high outside temperatures.

  Do not touch or cover the camera and wait until the camera has cooled down and is available again.
- The camera is covered, dirty, misted up or scratched.

  Wait until the camera has cooled down before cleaning the camera lens.

  Clean the outside of the camera lens with a dry or damp cotton cloth. Do not use microfibre cloths. Do **not** remove the cover when cleaning.
- Recognition can be impaired by reflective clothing, an adverse colour of clothing or by accessories, for example.
- Clothing being worn (hat, shawl, scarf) may be limiting the detection range of the camera.

  Keep the camera's field of vision clear.
- The camera is not operational.

  Consult a Mercedes-Benz service centre.

SUPPORTED INTERACTIONS

Interaction area	Interaction	Description
In front of the media display or above the touchpad	Proximity to the control element	The MBUX Interior Assistant recognises a hand approaching a control element. Depending on the active application, the display will be adjusted in the media display. Some functions differentiate between driver and front passenger. No specific hand position is required.
Above the centre console	Defined pose	A favourite is called up with a defined pose.
Below the inside rearview mirror	Brief up and down movements	With brief up and down movements below the inside rearview mirror the reading light for the driver or the front passenger is switched on and off.
Above the front passenger seat	Stretching out a hand above the front passenger seat	By stretching out a hand above the front passenger seat the search light is switched on. If you withdraw a hand from this area, the search light is switched off again.

You can watch an animation on this topic via the following link:

OPERATING FUNCTIONS BY BRINGING YOUR HAND CLOSER TO THE MULTIMEDIA SYSTEM

Requirements:

- One of the following applications appears in the media display:
  - Seat settings with displays for the driver and front passenger seat, e.g. Seat
  - Home screen
  - Radio menu or media menu
  - Map in the navigation
  - Active Parking Assist

SEAT ADJUSTMENTS BY THE DRIVER OR FRONT PASSENGER

In the seat settings menu, the MBUX Interior Assistant detects proximity to various control elements of the multimedia system. In addition, the MBUX Interior Assistant detects from which seat the action emanates.

- ▶ Either switch the function on and off directly or make further settings (depending on function).

HIGHLIGHTING AN APPLICATION ON THE HOME SCREEN

The MBUX Interior Assistant detects in which area your hand is in front of the touchscreen. The display of objects shown is adjusted to improve orientation.

- ▶ Move your hand towards the touchscreen.

  The symbol for the application is enlarged. The quick-access applications will be highlighted.

- ▶ Continue operation and select a quick-access application, for example.

ⓘ Further information about the home screen (⟶ page 457).

ACTIVATING COVER CHANGE IN THE RADIO MENU AND MEDIA MENU

The MBUX Interior Assistant reduces the number of operating steps.

► Continue operation and select a cover.

ⓘ More information on the radio menu (⟶ page 592) and the media menu (⟶ page 585).

SHOWING THE NAVIGATION MENU ON THE MAP
The MBUX Interior Assistant shows the navigation menu.

► Continue operation and select a symbol.

ⓘ Further information on the navigation menu (⟶ page 491).

SHOWING OPERATING SYMBOLS IN THE ACTIVE PARKING ASSIST CAMERA IMAGE (ONLY FROM DRIVER'S SEAT)
The MBUX Interior Assistant facilitates quick-access for the driver to various camera views.

► When Active Parking Assist is shown, move your hand towards the touchscreen.
The camera operation symbols are displayed.

► Continue operation and display the desired front, rear, left and right camera views.

ⓘ Further information on the Active Parking Assist function (⟶ page 403).

CALLING UP FAVOURITES WITH THE V POSE

Requirements:

- There is at least one favourite.
- The favourite has been connected with the MBUX Interior Assistant (⟶ page 468).
- The area for recognition of the favourite's pose (V pose) is above the centre console at the height of the climate control vents and the media display. Your hand should be at least 10 cm from the media display.
- The V pose is held for a brief time.

CALLING UP FAVOURITES
The driver and front passenger can connect two different favourites with the V pose.

ⓘ If a favourite has not yet been saved and connected with the MBUX Interior Assistant, the multimedia system will assist you.

► Position a hand above the centre console in the direction of the media display. The back of your hand is facing upwards. In doing so the index and middle finger are spread to form a V with the other fingers bent inwards. Briefly hold the V pose.
The favourite is called up.

CONTACTLESS SWITCHING ON OR OFF OF THE READING LIGHT FOR DRIVER AND FRONT PASSENGER

Requirements:

- The function is available when it is dark.
- The hand movement takes place in the interaction area below the inside rearview mirror.

Briefly moving a hand up and down under the inside rearview mirror switches the reading light specifically for the driver or front passenger on or off.

► Move your hand up and down under the inside rearview mirror.
The reading light is switched on or off.

SWITCHING THE SEARCH LIGHT FOR THE DRIVER ON OR OFF WITH A HAND MOVEMENT

Requirements:

- The function is available when it is dark.
- The hand movement takes place in the interaction area above the front passenger seat.
- The seat belt on the front passenger seat must **not** be inserted in the seat belt buckle.

Stretching out a hand over the front passenger seat switches a search light on for the driver when it is dark. Pulling the hand back switches the search light off again.

► **To switch on:** reach across the front passenger seat with a hand.
The search light is switched on for the driver.

► **To switch off:** take a hand back away from the front passenger seat.
The search light is switched off again.

SELECTING SETTINGS FOR THE MBUX INTERIOR ASSISTANT
Multimedia system:
Settings » System » Interior assistant

► **To switch on full functionality of the MBUX Interior Assistant:** select On.
The option is activated ●.

► **To activate additional functions for reading and search lights:** select Including search and reading light.
When the option is switched on, the display button is activated.
The functions for the reading and search lights are activated in addition to the proximity functions.

► **To switch off the MBUX Interior Assistant:** select Off.
The option is activated ●.

User profiles

NOTES ON USER PROFILES

WARNING
Risk of becoming trapped during adjustment of the driver's seat after calling up a driver profile

Selecting a user profile may trigger an adjustment of the driver's seat to the position saved under the user profile. You or other vehicle occupants could be injured in the process.

► Make sure that when the position of driver's seat is being adjusted using the multimedia system, no people or body parts are in the seat's range of movement.

If there is a risk of someone becoming trapped, immediately stop the adjustment process by:

► a) Tapping the warning message on the central display.

or

► b) Pressing a position button of the memory function or a seat adjustment switch in the driver's door.
The adjustment process is stopped.

The electrically adjustable driver's seat is equipped with an automatic reversing function.

If the driver's door is open, the driver's seat will **not** be set after calling up the driver's profile.

OVERVIEW OF USER PROFILES

REQUIREMENTS FOR USE

- You have registered with a Mercedes me ID and confirmed the terms of use.
- Your Mercedes me ID is linked to the vehicle.
- You have a Mercedes me ID PIN.

ⓘ If one of the pre-requisites listed is missing or if no user profile has been selected, the data described in the following section will be saved in the vehicle as the standard setting. Standard settings can be changed by all vehicle users.

User profiles save personal settings. If the vehicle is used by several people, a person can change their profile settings without changing the settings of other users.

You can individualise a user profile in the vehicle using the set-up assistant or using the settings in your user profile. Some settings, e.g. the Mercedes me ID PIN and a profile photo, are made in the Mercedes-Benz App or on the Mercedes-Benz website.

ⓘ If the user profile is downloaded while travelling, user profiles are not set up using the set-up assistant.

User-specific content and applications with personal data are protected by different levels of security (⟶ page 465).

To access protected content, the Mercedes me ID PIN and, depending on the vehicle equipment, biometric sensors are used.

ⓘ The security level is set by the multimedia system and calculated from the combination of all sensor inputs. Some security levels cannot be turned off.

ⓘ **WHEN A USER PROFILE IS ACTIVATED, THE FOLLOWING PERSONALISED COMFORT SYSTEMS, FOR EXAMPLE, CAN BE ADJUSTED OR THEIR SETTINGS LOADED:**

- Seat
- Ambient light
- Outside mirrors
- Air-conditioning settings

If the user profile is activated when driving then the driver's seat position will not be adjusted.

USER-SPECIFIC CONTENT

DEPENDING ON THE VEHICLE EQUIPMENT YOU CAN, AS A USER, SAVE THE FOLLOWING SETTINGS, FOR EXAMPLE:

- Driver's seat, steering wheel and mirror settings
- Climate control
- Ambient light
- Radio (including station list)

- Suggestions and favourites

You can watch an animation on this topic via the following link:

ADDING A USER

Requirements:

- The vehicle is stationary.

Multimedia system:

 Select user

▶ Select ⊕ Add user.

A QR code is loaded.

▶ Scan the displayed QR code with the Mercedes-Benz App or any QR code scanner on a mobile device. If the Mercedes-Benz App is not yet installed on your mobile device, you will be directed to the store on your mobile device.

▶ Follow the steps in the Mercedes-Benz App.

The vehicle is linked to your Mercedes me ID. This automatically creates your user profile in the vehicle.

You will be informed when your user profile is available.

When the vehicle is stationary, the set-up assistant starts automatically after user selection.

ⓘ When the user has been added, they can be selected (⟶ page 467).

SELECTING USER OPTIONS

Multimedia system:

 Settings

PROTECTING USER-SPECIFIC CONTENT AND APPLICATIONS

If you add a new user, access protection is already activated for the user profile. The Mercedes me ID PIN and, depending on the vehicle equipment, biometric sensors are available for access. Biometric sensors in the vehicle must be taught in. The authentication process then takes all taught-in and available sensors into account.

THE FOLLOWING USER-SPECIFIC CONTENT AND APPLICATIONS ARE PROTECTED, FOR EXAMPLE:

- User selection and user profile settings
- Biometric sensors

  The teaching-in of biometric sensors

  For teaching in and editing biometric recognition see the following section.
- Suggestions

  The data and determination of the most probable navigation destinations, media sources, radio stations, contacts and messages.
- ENERGIZING COACH

  The recorded health data and its evaluation.
- In-Car Office

  The calendar, the tasks and the e-mails.
- Parking service

  The payment transactions.
- Mercedes-Benz Store

  The purchase of Digital Extras
- System activations of paid vehicle functions

IN THE FOLLOWING CASES YOU WILL BE PROMPTED FOR AUTHENTICATION OR RE-AUTHENTICATION USING A SENSOR OR THE MERCEDES ME ID PIN:

- When selecting a protected user profile
- When calling up a function requiring special protection
- If biometric sensors provide insufficient or contradictory information
- If the multimedia system no longer trusts a sensor
- If the seat belt buckle and the door are opened at the same seat and a function requiring special protection is called up
- When the vehicle is locked from outside

► Select Protect content.

► Switch Access protection on or off.

ⓘ When access protection is switched off, your user profile can be viewed from any seat and changes can be made.

ⓘ Access protection is switched on or off on a vehicle-specific basis.

ⓘ Please note that authentication is necessary for several functions such as In-Car Office and cannot therefore be completely switched off.

SETTING UP AND EDITING BIOMETRIC RECOGNITION

The biometric data models are saved in the sensors in the vehicle. If recognition has been set up, this sensor serves as a contributory factor for authentication on the multimedia system.

► Select Protect content.

► Select Voice recognition.

ⓘ If necessary, authenticate yourself on the multimedia system.

SETTING UP VOICE RECOGNITION

► Speak the sentence shown on the media display and follow the voice assistant's instructions.

If voice recognition was successful, a message appears on the media display. You can unlock your user profile.

ⓘ Avoid background or disturbing noises during voice recognition.

DELETING BIOMETRIC DATA

► Tap on 🗑 behind Voice recognition.

► Select Yes.

CALLING UP THE SET-UP ASSISTANT

► Select Profile.

► Select Set-up assistant.

► Follow the directions from the set-up assistant.

CHANGING A USER NAME OR PROFILE PHOTO

- ► Select Profile.
- ► Select Change user name.

or

- ► Select Profile picture.
- ► Enter the user name or select a user image.
- ► Select Finished.

ⓘ You can use the Mercedes me ID to store your photo in the Mercedes-Benz App or in the Mercedes-Benz Portal. The photo will then be shown in the vehicle. In the vehicle itself, you can select other sample images instead of the photo.

DELETING A USER PROFILE

- ► Select Profile.
- ► Select Remove.
- ► Select Remove user profile.

ⓘ Your Mercedes me ID and your personal data are retained in the Mercedes-Benz ecosystem.

RESETTING THE USER PROFILE TO FACTORY SETTINGS

- ► Select Profile.
- ► Select Reset.
- ► Select Yes.

ⓘ This resets the contents of the user profile to factory settings, but not the vehicle.

You can watch an animation on this topic via the following link:

SELECTING A USER

Multimedia system:



ⓘ When you call up your driver profile, the driver's seat and the steering wheel can be set.

YOU CAN CANCEL THE SETTING PROCESS WITH THE FOLLOWING ACTIONS:

- Press one of the seat operating buttons in the driver's door.

- ► Select Select user.
- ► Select a user.
- ► When requested to do so, authenticate with the Mercedes me PIN or a taught-in biometric characteristic.

  The user profile is loaded and activated.

ⓘ If you select Continue without selecting user, no specific settings for the user profile are loaded.

SYNCHRONISING USER PROFILES

Requirements:

- You have a Mercedes me ID.

- The vehicle is linked to your Mercedes me ID.

Multimedia system:

→ Settings » Synchronisation

► Synchronise automatically .

When the vehicle is switched on or off, the data stored in the vehicle is automatically synchronised with the Mercedes me IDs. This synchronisation is done for all user profiles and is not profile-specific.

or

► Select Synchronise now.

The data stored in the vehicle is synchronised with the personal profiles after selecting this option.

ⓘ Not all user profile functions are available during synchronisation. During synchronisation, the most recently changed data is applied.

ⓘ **IF THE PERSONALISATION SERVICE IN THE VEHICLE IS DEACTIVATED, ONLY THE FOLLOWING USER PROFILE MASTER DATA IS SYNCHRONISED:**

- Profile name
- Profile image
- Mercedes me ID PIN

Favourites

OVERVIEW OF FAVOURITES

Favourites offer you quick access to frequently used applications. 100 favourites are available in total.

You can select favourites from categories or you add favourites directly from an application.

ⓘ You can add and edit navigation favourites within the application.

CALLING UP FAVOURITES

Multimedia system:

→ ★

► Alternatively, in the home screen pull down bar in the centre of the status line (⟶ page 457).

► Select ★ in the Control Center.

ADDING FAVOURITES

Multimedia system:

→ ★

SELECTING FAVOURITES FROM CATEGORIES

► Select >.

► Select + Create new favourite.

► Select the category.

► Select a favourite.

The favourite is stored at the next available position.

- **All positions in the favourites are taken:** confirm the message shown.
  A list shows all the favourites.
- Select a favourite to be overwritten.

ADDING A FAVOURITE FROM AN APPLICATION

You can, for example, save a contact (example), or add an ENERGIZING COMFORT programme.

- **To save a contact as a global favourite:** select a contact (→ page 545).
- Press on a telephone number until a menu is shown.
- Select Save as favourite.
  The contact is added as a favourite.

LINKING FAVOURITES WITH THE MBUX INTERIOR ASSISTANT V POSE

ⓘ If a favourite is linked to the V pose, you can call it up (→ page 462).

- Select [>].
- Select Driver or Passenger.
- Select the category.
- Select a favourite.
  If the favourite is linked with the V pose, a notification appears.

ⓘ The linked favourite pose can be activated or deactivated for the driver or front passenger.

RENAMING FAVOURITES

Multimedia system:



- Press on a favourite until a menu is shown.
- Select Rename.
- Enter the name.
- Save the names.

MOVING FAVOURITES

Multimedia system:



- Press on a favourite until a menu is shown.
- Select Move.
- Move the favourite to the new position.
- Tap on [✓].

DELETING FAVOURITES

Multimedia system:



- Press on a favourite until a menu is shown.
- Select Delete.
- Select Yes.

RESETTING FAVOURITES

- In the menu, select Reset all favourites.
- Select Yes.

Notifications Centre

OVERVIEW OF THE NOTIFICATIONS CENTRE

THE FOLLOWING COMMUNICATIONS ARE COLLECTED IN THE NOTIFICATIONS CENTRE:

- Communications which are generated by the vehicle or from the multimedia system.
- Messages that arrive through the use of Digital Extras.

THE FOLLOWING NOTIFICATION TYPES ARE AVAILABLE FOR YOU:

- Navigable destinations and routes
- Messages (text messages)
- Calendar entries and reminders, e.g. from In-Car Office

  This function is not available in all countries.
- System information, e.g. Important software update available. Confirm to start the update.
- Other notifications, e.g. from additional Digital Extras that can be booked or from emergency reports (e.g. tornado)

The Notifications Centre is in the Control Centre.

Depending on the style set, newly received notifications are shown using a coloured dot.

Notifications are normally briefly shown as they are received. If you take no action, these are stored for future access in the Notifications Centre.

The notifications are sorted chronologically. The most recent notifications are at the top.

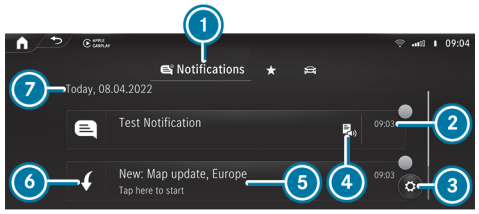

Example of a message

1. Calls up the Notifications Centre
2. Time message received
3. Calls up the settings
4. Display for available actions
5. Description of the notification and the issuing service
6. Symbol for notifications
7. Date of the received notifications

Depending on the type of notification, up to four different actions are available.

EXAMPLES OF ACTIONS INCLUDE:

- Reading aloud
- Placing a call
- Replying
- Calling up a web page
- Navigation

Some notifications, e.g. a navigation destination, are stored longer. Therefore, it is not necessary to carry out available actions directly upon receipt of the notifications. A route guidance can be started at a later time.

You can pin a notification so that it is not deleted automatically after a certain time has elapsed (→ page 471).

CALLING UP NOTIFICATIONS

OPENING THE NOTIFICATIONS CENTRE

- ► Select [ ] in the Control Center.

SELECTING A NOTIFICATION

- ► If several messages are available swipe up or down.
- ► Select an action.

CLOSING THE NOTIFICATIONS CENTRE

- ► Select [ ].

SELECTING ACTIONS FOR A NOTIFICATION

THE FOLLOWING OPTIONS ARE AVAILABLE:

- Select the action directly after a notification is received and shown.
- Select the action later after calling up in the Notifications Centre.

- ► Up to two actions available: select the action.
- ► More than two actions available: select [ ].
- ► Select the action.
  The notification is still available.
- ► Close the actions with [ ].

EDITING NOTIFICATIONS

- ► Call up the Notifications Centre (→ page 471).

CONFIGURING SETTINGS

- ► Select [ ] Settings .
- ► Select the service.
- ► Switch the options on or off.

  THE FOLLOWING OPTIONS ARE AVAILABLE DEPENDING ON THE SERVICE:

  - Allow notifications
  - Display in notification centre
  - Show notifications
  - Switching Acoustic signals on or off
  - External access

    The option allows an external service access to specific data, e.g. the current vehicle position. The detailed, approved information is shown with ⓘ.

  If Allow notifications is switched off, the options cannot be selected with the exception of External access.

PINNING A NOTIFICATION

- ► Drag a notification to the right on the touchscreen.
  A pin appears.
- ► Tap on the pin.
  The notification is marked with a pin.

DELETING NOTIFICATIONS

- ► Drag a notification to the left on the touchscreen.

or

- ► Select [ ].
- ► Select Yes.
  All messages are deleted.

Global search

GLOBAL SEARCH OVERVIEW

You can call up the global search on the home screen. You can input characters using the keyboard or the handwriting recognition. Alternatively, the MBUX voice assistant allows voice input.

THE GLOBAL SEARCH PROVIDES SEARCH RESULTS FOR THE FOLLOWING CATEGORIES:

- Navigation
- Entertainment
- Phone, In-Car Office

  In-Car Office is not available in all countries.
- Digital Owner's Manual
- Website

The global search enables you to search for towns, roads and tourist attractions in the navigation category, for example.

If the search field is empty, you will first see smart suggestions in the Suggestions category.

If a letter is entered, the best hits are displayed in the All category. You will find further search results in the individual categories. Next to the category is the number of results.

After selecting a category you can select the search results within the category. When you select a search result, a detailed view is opened depending on the category.

USING THE GLOBAL SEARCH

Multimedia system:

Search

In the Suggestions category up to six smart suggestions are displayed, even if no search entry has been entered yet.

- Enter the search term into the search field.

  As soon as a character is entered the All category is marked. Up to ten search results per category are displayed there.

  In the other categories suitable search results for the entered search item are displayed.

Alternatively, the MBUX Voice Assistant allows voice input using [ ] or you switch to the handwriting recognition [ ] (→ page 473).

- **To end the search:** select [OK].
- **To show search results for a category:** select a category.
- **To accept the search result:** select the search result.

  An action starts, e.g. a radio station is set or a detailed view is displayed, e.g. for a contact.

Entering characters

USING THE CHARACTER INPUT FUNCTION

Enter the characters on the Touch Control or on the touchscreen. Character input can be started with a control element and resumed with another.

- When the keypad is shown, enter the characters by swiping and pressing on the Touch Control or by tapping on the touchscreen.

Examples for character input include the global search, entering a navigation destination or the renaming of a favourite, for example.

ENTERING CHARACTERS ON THE TOUCHSCREEN

Requirements:

- An online connection is required for some functions.

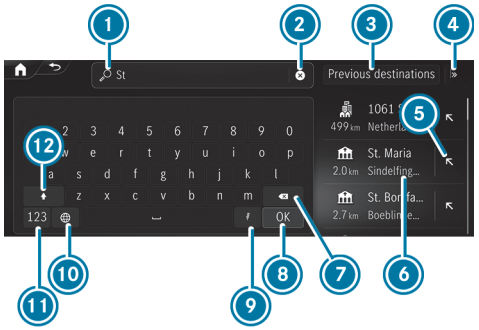

Character input with the keypad (destination entry)

(1) Input line with current entry
(2) Deletes an entry
(3) Selects previous destinations
(4) Displays and selects additional destination searches
(5) Adopts the search result in the input line and continues the search
(6) Search result
(7) Deletes the last character entered
(8) Hides the keypad
(9) Activates voice entry.
(10) Sets the written language
(11) Switches to digits and special characters
(12) Switches to upper-case or lower-case letters

- Example: call up the navigation and enter a destination address (→ page 37).
- Briefly press on a character.
  The character is entered in input line (1).
- Resume character input.

ⓘ The available editing functions depend on the editing task, the language set and the character level.

ENTERING ALTERNATIVE CHARACTERS

- Press and hold on a character.
- Select the character.

ENDING CHARACTER INPUT

- Hide keypad (8).

SETTING THE KEYBOARD FOR CHARACTER ENTRY

Multimedia system:

Settings » System » Keyboards and handwriting

SETTING THE KEYBOARD LANGUAGE

- Select Keyboard languages.
- Select one or more keyboard languages.

DELETING THE USER DICTIONARY

The user dictionary learns from your inputs and offers suggestions during character input. You can reset the user dictionary.

- Select Reset my dictionary.
- Select Yes.

System settings

Display

CONFIGURING DISPLAY SETTINGS
Multimedia system:
Settings » System » Display

ADJUSTING THE BRIGHTNESS

- Select Display brightness.
- Vehicles with a driver display and media display: adjust the display brightness of the driver display or media display.

Time and date

SETTING THE TIME ZONE
Multimedia system:
Settings » System » Time and date

- Select Time zone.
  The list of countries is displayed.

> If there are several time zones available in a country, these will be shown after the country is selected.

- Select a country and, if required, a time zone.
  The time zone set is displayed after Time zone.

or

- Select the Automatic time zone entry from the country list.
  The time zone will be set automatically according to the vehicle location.

> The Automatic time zone option is available for vehicles with satellite reception.

SETTING THE TIME AND DATE FORMAT
Multimedia system:
Settings » System » Time and date » Set format

- Select a time and date format.

SETTING THE TIME AND DATE MANUALLY

Requirements:

- The vehicle does not have satellite reception.

Multimedia system:
Settings » System » Time and date

SETTING THE TIME

- Select Set time.
- Set a time.
- Press OK to confirm.

SETTING THE DATE

- ▶ Select Set date.
- ▶ Select a date.
- ▶ Press OK to confirm.

ⓘ On vehicles with satellite reception, the time and date settings are determined automatically based on the vehicle location and cannot be set manually.

ADJUSTING THE TIME

- ▶ Select Adjust time.
- ▶ Set a value.
- ▶ Press OK to confirm.

ⓘ The function is only available in vehicles with satellite reception.

Switching voice amplification on/off (vehicles with long wheelbase)

Requirements:

- Your vehicle is equipped with the Burmester® 3D surround sound system or the Burmester® high-end 4D surround sound system.
- The ignition is switched on.
- The doors, side windows and the panoramic sliding sunroof are closed.
- At least one seat belt is fastened on the rear bench seat.

Multimedia system:

Settings » System » Audio » Voice amplification volume

Voice amplification supports communication between the driver/front passenger with vehicle occupants in the rear passenger compartment. When voice amplification is activated, the signals picked up by the microphone are amplified depending upon vehicle noise levels and played back over the speakers in the rear area of the vehicle. In order to improve speech intelligibility and maintain the naturalness of speech an automatic adjustment occurs based on speaker volume and ambient noise.

- ▶ Switch voice amplification on or off.

SETTING THE INTENSITY OF THE VOICE AMPLIFICATION

- ▶ Set the desired intensity on the control.

  Depending on the intensity set, voice amplification is increased or reduced.

Vehicle position

SWITCHING TRANSMISSION OF THE VEHICLE POSITION ON OR OFF

Requirements:

- The vehicle is linked to a Mercedes-Benz ID.
- At least one Digital Extra is activated for the vehicle, which can be used to display the vehicle position to customers and/or co-users via the respective user accesses.

With this setting, you decide whether the vehicle position will be transmitted in order to show it to users who have access to the digital Mercedes-Benz services for this vehicle.

ⓘ The function is country-dependent. For more information, consult a Mercedes-Benz Service Centre.

Multimedia system:

Settings » System » Data protection

► Activate or deactivate the Transmit veh. position function.

ⓘ Alternatively, you can also switch the function on or off in the status line via .

Setting permissions

Multimedia system:

Settings » System » Data protection » Permissions

In the Permissions menu, you can set access authorisations for various data points (such as microphone, camera) used in an application. You can change permissions that have already been granted here. You can set permissions either for individual data points or for certain applications or websites.

► Select Requests or Apps/websites.

► Make the required settings for the permissions.

Bluetooth®

INFORMATION ABOUT BLUETOOTH®

Bluetooth® technology is a standard for short-range wireless data transfer up to approximately 10 m.

YOU CAN USE BLUETOOTH® TO CONNECT YOUR MOBILE PHONE TO THE MULTIMEDIA SYSTEM AND USE THE FOLLOWING FUNCTIONS, FOR EXAMPLE:

- Hands-free system with access to the following options:
  - Contacts (→ page 544)
  - Call lists (→ page 546)
  - Text messages (→ page 547)
- Internet connection (→ page 574)

Bluetooth® is a registered trademark of Bluetooth Special Interest Group (SIG) Inc.

ⓘ Internet connection via Bluetooth® is not available in all countries.

ACTIVATING/DEACTIVATING BLUETOOTH®

Multimedia system:

Settings » System » Internet and Bluetooth

► Activate or deactivate Bluetooth.

Near Field Communication (NFC)

INFORMATION ON NEAR FIELD COMMUNICATION (NFC)

NFC enables short-range wireless data transfer or connection of a mobile phone with the multimedia system.

Further information can be found at: https://www.mercedes-benz-mobile.com/

SWITCHING NEAR-FIELD COMMUNICATION ON OR OFF
Multimedia system:
Settings » System » Internet and Bluetooth
▶ Activate or deactivate NFC.

Wi-Fi

WI-FI CONNECTION OVERVIEW
You can use Wi-Fi to set up a connection to the Internet or to external network devices.

ⓘ The availability of the function is dependent on the country.

GENERALLY, TWO TYPES OF WI-FI CONNECTION ARE AVAILABLE:

- **Using the multimedia system as a Wi-Fi hotspot** (⟶ page 478)
  The vehicle's multimedia system serves as a Wi-Fi hotspot for mobile communication devices, such as smartphones or tablet PCs, for example.

- **Using a mobile communication device as a Wi-Fi hotspot (tethering)** (⟶ page 576)
  An external Wi-Fi hotspot is accessed for the Internet connection of the vehicle's multimedia system.

SWITCHING WI-FI ON OR OFF
Multimedia system:
Settings » System » Internet and Bluetooth
▶ Select Wi-Fi.
The controller is to the right: Wi-Fi is switched on.

When Wi-Fi is switched on, you can connect the multimedia system with external hotspots or make it available as a hotspot for external devices.

When Wi-Fi is switched off, it is not possible to establish a hotspot connection.

ⓘ Availability of the function is dependent on the respective country.

USING THE MULTIMEDIA SYSTEM AS A WI-FI HOTSPOT

Requirements:

- The device to be connected supports at least one of the types of connection described.
  The connection types shown depend on the device to be connected. The function must be supported by the multimedia system and by the device to be connected. The type of connection must be selected on the multimedia system and on the device to be connected.

ⓘ The data volume of the vehicle or an already connected tethering device is used for the data connection.
Vehicle data volume: depending on the vehicle equipment, you can purchase an Entertainment Package via the Mercedes-Benz Store. In order to use the data package included, you must conclude your own contract with a mobile phone network provider via the Mercedes-Benz App. This can be terminated at any time and incurs no costs. Without this contract it is not possible to use the services included in the previously acquired Entertainment Package. The availability of this option is dependent on the country.

If the data package option is not available or can be upgraded, you can purchase data volume directly from the mobile phone network provider for a fee. The availability of this option is dependent on the country.

Some functions may first need to be activated on the device being connected. More detailed information can be found in the manufacturer's operating instructions.

The use of the vehicle data tariff by external devices is not available in all countries.

Multimedia system:

Settings » System » Internet and Bluetooth

- Select MBUX hotspot.
- Select one of the following connection options.

CONNECTING USING A QR CODE

Requirement: an app for scanning the QR code is installed on the device being connected.

Alternatively: the device being connected has an integrated QR code scanner (see the manufacturer's operating instructions).

- Scan the QR code shown.

  The WLAN connection is established.

CONNECTING USING NFC

- Activate NFC on the device to be connected.
- When the NFC symbol is displayed in the MBUX hotspot menu, hold the device to be connected to the NFC interface.
- Follow the instructions on the device.

  The WLAN connection is established.

CONNECTING USING A SECURITY KEY

- Select the vehicle from the device to be connected. The vehicle is displayed with the MBUX XXXXX network name.
- Enter the security key which is shown in the media display on the device to be connected.
- Confirm the entry.

GENERATING A NEW SECURITY KEY

- Select the Generate new security key option in the MBUX hotspot menu.
- Confirm the prompt with Yes.

  A new security key is generated.

A connection will be established with the newly created security key.

When a new security key is generated, all existing WLAN connections are then disconnected. If the WLAN connections are re-established, the new security key must be entered.

System language

NOTES ON THE SYSTEM LANGUAGE

This function allows you to determine the language for the menus and navigation announcements. The selected language affects the characters available

for entry. The navigation announcements are not available in all languages. If a language is not available, the navigation announcements will be in English.

SETTING THE LANGUAGE
Multimedia system:
Settings » System » Language

SETTING THE SYSTEM LANGUAGE
A list of the available system languages is shown.

- Select a language.
  The system language is switched to the selected language.

Setting the distance unit

Multimedia system:
Settings » System » Display

> This function is not available in all countries.

- Select a unit for the distance.
- Activate Additional speedometer for an additional display in the driver display.

Activating/deactivating system PIN protection

Multimedia system:
Settings » System » Data protection » PIN protection

SETTING THE SYSTEM PIN

- Select Set PIN.
- Enter a four-digit system PIN.
- Enter the four-digit system PIN again.
  If both system PINs match, then the system PIN protection is active.

CHANGING THE SYSTEM PIN

- Select Change settings.
- Enter the current system PIN.
- Select Change PIN.
- Set a new system PIN.

ACTIVATING SYSTEM PIN PROTECTION FOR SOFTWARE UPDATES

- Select Protect software updates.
- Activate or deactivate the function.

Configuring suggestions

Multimedia system:
Settings » System » Suggestions

- Select .

- Switch the options on or off individually.

  If an option is switched on and sufficient data has been gathered, personalised suggestions based on your user behaviour will be offered to you. These are, for example, navigation destinations visited, phone numbers dialled as well as suggestions based on your music preferences.

  Navigation

  When Allow destination suggestions is switched on, the vehicle makes suggestions based on your visited navigation destinations.

  If Commuter route is switched on, the navigation automatically detects that the vehicle is on a commuter route.

  Calls & messages

  Suggestions are offered for numbers dialled and messages sent.

  Comfort

  The vehicle makes suggestions based on the use of your comfort functions, e.g. which massage programme should be started at what time.

  Entertainment

  Suggestions are offered for the currently played media source. Suggestions are also made for Digital Extras such as Spotify, TuneIn Radio and other streaming providers as well as for categories, for example, genre, artist and mood.

  Vehicle

  The suggestions for vehicle functions are displayed, e.g. for Parking Assist PARKTRONIC.

  Online voice services

  The suggestions are made available online based on your voice input and are offered on the zero layer.

The zero layer is your own personalised user interface with the digital map in the foreground and the applications that you use the most. You can switch between the zero layer and the home screen with a classic menu.

The suggestions offered depend on the equipment.

Deleting collected suggestions

Multimedia system:

Settings » System » Suggestions

- Select .
- Select Yes.

  The suggestions are reset.

Software update

INFORMATION ON SOFTWARE UPDATES

Software updates keep your vehicle and the related systems up-to-date and prevent security flaws.

Software updates are available online for vehicle components such as control units, convenience systems, locking and safety systems, driver assistance systems, suspension and drive systems as well as for the MBUX multimedia system. Software updates are available via the communication module or a Wi-Fi connection to an external hotspot.

The navigation maps are also updated via updates from external storage media (e.g. USB flash drive).

Install available software updates regularly. Otherwise the security of your MBUX multimedia system and individual vehicle components cannot be ensured.

Software updates can be protected with a system PIN. Further information about the system PIN (⟶ page 480).

Further information about software updates can be found at https://me.secure.mercedes-benz.com.

CARRYING OUT SOFTWARE UPDATES

Requirements:

FOR SOFTWARE UPDATES VIA THE COMMUNICATION MODULE AND WI-FI:

- Your vehicle is linked to a Mercedes me ID (⟶ page 565).
- Software updates without Mercedes me ID: the Allow software updates option in the Software update menu is activated.
- For software updates via the communication module: an Internet connection exists via the communication module (⟶ page 575).
- For software updates via Wi-Fi: a connection to an external Wi-Fi hotspot exists (⟶ page 576).

Depending on the software update, this is started via the communication module, Wi-Fi or an external storage medium.

Online software updates cannot be performed via external Wi-Fi hotspots that are encrypted via TKIP.

If the Wi-Fi hotspot requires logging in via the browser, once the connection is successfully established the browser will open in order to start the update. To start the download follow the instructions in the browser.

Multimedia system:

Settings » System » Software update »

STARTING A MAP UPDATE FROM AN EXTERNAL STORAGE MEDIUM

- ► Connect the storage medium with the vehicle via a media interface.
  A message about an available map update appears on the media display.
- ► Select the message.
- ► Select Start.
  The map update is started.

STARTING THE SOFTWARE UPDATE VIA THE COMMUNICATION MODULE

If the Automatic online update option is active, available software updates are downloaded and installed automatically. Activate the option in order to always keep your vehicle up-to-date and avoid security flaws.

- ► Select Automatic online update.
  The software update is downloaded and installed automatically.

If the option is deactivated, you will be informed of new software updates once. The updates are available for downloading for a limited period of time.

- ► Select an update from the list of available updates.
- ► Start the update.
  The software update is downloaded and installed automatically.

STARTING A SOFTWARE UPDATE VIA WI-FI
Some software updates require an additional connection to a Wi-Fi hotspot. The connection to an external hotspot can be established when the software update is started.

- ► Select an update from the list of available updates.
- ► Start the update.
- ► Establish the connection to a Wi-Fi hotspot.
  The update is downloaded and installed automatically.

For software updates requiring a safe vehicle status: when the last installation step is reached, a message appears on the media display after the vehicle is switched off. Follow the step-by-step instructions on the media display to complete the installation.

There are software updates that can only be installed when the vehicle is safely parked, there are no more people in the vehicle and the vehicle is locked.

INSTALLING SOFTWARE UPDATES
Software updates are installed automatically after they are downloaded. As soon as the software update has been completed, a message appears in the media display. It may be necessary to restart the MBUX multimedia system.

Some software updates require a safe vehicle status for the installation to be completed. They can only be carried out in a safely parked vehicle with the vehicle switched off. If this is necessary, a message appears on the media display after the vehicle is switched off.

- ► Follow the instructions on the media display.

For some software updates, you can set a time for installation. The installation is carried out automatically at the scheduled time. You do not need to be in the vehicle during installation. Note that the planned installation is cancelled as soon as the vehicle door is opened.

If an installation is available where you can set the time, a message appears on the media display after the vehicle is switched off.

- ► Follow the instructions on the media display.

The vehicle cannot be used while these software updates are being installed. Make sure that no persons or animals are in the path of your vehicle. Events stored in the vehicle's control units can be overwritten.

AVAILABILITY OF THE DRIVER AND MEDIA DISPLAY
During the installation of software updates, it is not possible to use the vehicle, driver display and media display. You may receive the following display message when an installation is running:

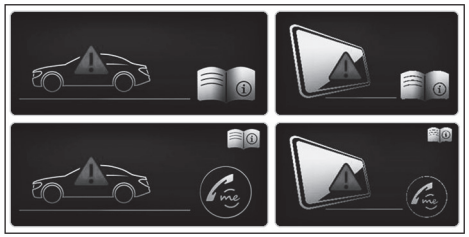

ⓘ The display message does not appear every time a software update is installed.

In rare cases, an error can occur during the installation. The multimedia system automatically attempts to restore the previous version.

If it is not possible to restore the previous version, the display message shown above appears every time the vehicle is started.

FAILURE OF THE DRIVER DISPLAY:
If the driver display fails or there is a malfunction, you may not recognise limitations in the functions of systems relevant to safety or the speed display, for example. This may impair the operating safety of the vehicle. Park the vehicle safely as soon as possible and notify a qualified specialist workshop .

Further information about software updates can be found at https://me.secure.mercedes-benz.com

FAILURE OF THE MEDIA DISPLAY:
If the media display fails or the display message shown above is shown continuously, several systems such as the reversing camera, Parking Assist PARKTRONIC or climate control are no longer available. Drive on carefully and consult a specialist workshop as soon as possible.

Resetting the multimedia system (reset function)

WARNING
Risk of accident due to failure of central display functions

While the multimedia system is reset, its functions, such as the reversing camera, are not available.

- ► Only reset the multimedia system when the vehicle is stationary.

Requirements:

- The vehicle is switched on.
- The vehicle is stationary.

Multimedia system:
Settings » System » Reset

WHEN RESETTING THE SYSTEM, PERSONAL DATA AND SETTINGS ARE DELETED, FOR EXAMPLE:

- Connected devices
- Individual user profiles
- Biometric data

ⓘ The data used and saved in the multimedia system by the driver assistance systems is deleted.

- ► Select Reset.
  A query appears asking if the system should really be reset.
- ► Select Yes.
  The multimedia system is reset to the factory settings. The multimedia system is restarted after the system reset.

ⓘ Due to data protection, as well as the function of individual driving systems and driving safety systems, it is a requirement to carry out a complete system reset before selling the vehicle or transferring it to a third party, or after use as a hire car.

Drive system settings

Functions of the energy flow display

The active components of the drive system are highlighted on the energy flow display. The energy flow between the individual components is shown in colour.

THE ENERGY FLOW IS SHOWN IN DIFFERENT COLOURS DEPENDING ON THE OPERATING STATUS:

- **White:** strong acceleration (boost effect)
- **Copper:** driving at constant speed or with moderate acceleration
- **Blue:** recuperation (charging the high-voltage battery) or overrun mode

Calling up the energy flow display

Multimedia system:

→ Info

► Select Energy flow.

The energy flow in the vehicle will be displayed.

Fit & Healthy

Setting ENERGIZING seat kinetics

Requirements:

ⓘ These functions are available only for fully electric seats with a memory function.

Multimedia system:

Comfort » Seat

- Select Seat kinetics.

ENERGIZING seat kinetics can support back health by changing the seat position during a journey. This involves repeatedly stressing and relieving the muscles and joints by means of minor movements of the cushion and backrest.

STARTING SEAT KINETICS

- Select ▶ for the desired seat.

  The programme will run for the set duration.

CONFIGURING SEAT KINETICS

- Select ⚙ for the desired seat.
- Select Backrest, Backrest & seat surface or Seat surface.
- Select the desired duration for the selected seat.

ENERGIZING COMFORT

OVERVIEW OF ENERGIZING COMFORT PROGRAMMES

ⓘ Note that the available programmes and the associated functions depend on your vehicle equipment. Depending on your equipment, fewer functions may be available.

PROGRAMME OVERVIEW

- **Refresh:** Can have a refreshing effect with short, cool puffs of air. The seat is ventilated, the vehicle interior is illuminated with cool colours and the programme is completed with appropriate sound.
- **Warmth:** Can increase the comfort level of the vehicle occupants. Seat, surface and steering wheel heater provide soothing warmth. The programme is completed with unobtrusive sound and warm colours.
- **Vitality:** Can counteract diminishing attentiveness in monotonous driving situations. The activating stimulation of the vehicle occupants is carried out with invigorating sound, activating light and a vitalising massage.
- **Joy:** Can promote a positive mood in the vehicle occupants as well as mental regeneration. This results from the activation of a massage programme, friendly sound and illumination with suitable colours.
- **Well-being:** Can help relax the vehicle occupants. This is achieved through a relaxing massage programme, friendly light and calming sound.

- **Forest Glade:** Can have a calming and soothing effect on the vehicle occupants thanks to the acoustics of the forest. The ambience is supported by a suitable animation, colours and sound.
- **Sounds of the Sea:** Can contribute to calming the vehicle occupants. The acoustics of wave sounds and seagulls in combination with other vehicle functions create a relaxing seashore atmosphere.
- **Summer Rain:** Can help relax the vehicle occupants. The relaxing effect of a rain shower can be experienced via acoustics and other vehicle functions inside the vehicle.
- **Power Nap:** The programme consists of three phases.
  - Falling asleep phase: here relaxing music is played and the air is purified by ionisation.
  - Sleeping phase: the active functions are deactivated or restricted as much as possible.
  - Waking phase: slightly stimulating music is played and the air is purified by ionisation. Additionally, functions such as fragrancing, seat ventilation and a massage programme are activated.
- **Training:** Can counteract the onset of muscle tension, limbs falling asleep or stress with targeted relaxation or stimulation exercises. The exercises are demonstrated in short videos.

  The training consists of audio content and a brief animation. The audio content is conceived so that it can also be played back when you are driving. Animations are only shown when the vehicle is stationary. Always observe the traffic conditions if you are training when driving.
- **Tips:** The system gives auditory tips for possible exercises or measures for improving the comfort level of the vehicle occupants. By selecting the desired area of the body you can receive targeted tips for the comfort level of this area.

Most programmes that have been started for one seat can also be transferred simultaneously to another seat.

STARTING THE ENERGIZING COMFORT PROGRAMME

WARNING
Increased risk of accident when using the ENERGIZING COMFORT programmes Tips and Training

The ENERGIZING COMFORT programmes Tips and Training can distract you while driving.

► Only carry out exercises when the traffic situation permits.

► When listening to the tips, make sure that you are aware of the traffic situation around you at all times.

WARNING
Risk of becoming trapped when using the ENERGIZING COMFORT programme Power Nap

The following systems may be automatically moved when using the ENERGIZING COMFORT programme Power Nap:

- Side windows
- Sliding sunroof
- Roller sunblinds

As a result you or other vehicle occupants may become entrapped.

► Make sure that there is sufficient space behind the front seats.

► Make sure that no body parts are in the area of movement.

Requirements:

- The vehicle is switched on.

FOR THE START OF POWER NAP:

- Only the power supply is on.
- The doors are closed.
- The vehicle is secured against rolling away.
- The state of charge of the high-voltage battery is sufficient for the use of the auxiliary climate control.

Multimedia system:

Comfort ENERGIZING COMFORT

STARTING AND STOPPING A PROGRAMME

- Select a programme.
- Select ▶ for the desired seat.
- Select ■ to stop the programme.

ⓘ If, during an active programme, a function requirement is no longer met, a corresponding message appears. The active programme is cancelled.

CONFIGURING A PROGRAMME

- Select a programme.
- Select Settings.
- Switch the functions included in the programme on or off.

SETTING THE DURATION

- Select a programme.
- Select Settings.
- Select the desired duration.

STARTING A POWER NAP

- Select Power Nap.
- Select ▶ for the desired seat.

WHEN THE VEHICLE IS STATIONARY, THE FOLLOWING ACTIONS ARE CARRIED OUT WHEN POWER NAP IS STARTED:

- The roller sunblinds are extended.
- The doors are locked.
- The windows and sliding sunroof are closed.
- The parking brake is applied.

- Select ■ to stop the programme.

STARTING THE TRAINING PROGRAMME

- Select Training.
- Select ▶ a programme .
- **To activate fragrancing for training:** select Air freshener.
- Select ■ to stop the training programme.

ⓘ The animations demonstrating the exercises are faded out when the vehicle is in motion and you only hear the instructions.

STARTING TIPS

- ▶ Select Tips.
- ▶ Select [▶] an area of the body.
- ▶ Select [■] to stop playback of the tip.

ENERGIZING COACH

FUNCTION OF THE ENERGIZING COACH

REQUIREMENTS:

- The ENERGIZING COACH Digital Extra is activated in the Mercedes-Benz Portal or the Mercedes-Benz App.
- The Mercedes-Benz ENERGIZING app is installed on the mobile phone to use the Digital Extra.

With ENERGIZING COACH you can evaluate the driving and driver situation. Depending on the situation, it offers recommendations for the start of an appropriate ENERGIZING COMFORT programme.

THE FOLLOWING PROGRAMMES COULD BE SUGGESTED:

- Vitality

  As an activating programme in monotonous driving situations or for long journey times, for example

  Information on the vitality program see (⟶ page 486).
- Joy

  As a balancing programme in demanding driving situations

  Information on the Joy programme see (⟶ page 486).
- Refresh

  As a refreshing programme when temperatures rise

  Information on the Refresh programme; see (⟶ page 486).
- Warmth

  As a warming programme when temperatures drop

  Information on the Warmth programme; see (⟶ page 486).

By connecting a Garmin fitness tracker, for example the Garmin vívoactive® 3, additional information can be entered into the evaluation for the recommendation of an ENERGIZING COMFORT programme. The additional information includes the stress level, that is calculated by the fitness tracker. The stress level is based primarily on the pulse rate.

REQUIREMENTS FOR THE INTEGRATION OF ADDITIONAL INFORMATION VIA A GARMIN FITNESS TRACKER:

- Your fitness tracker is connected with your Garmin account.
- Your Garmin account is linked to your Mercedes-Benz user account.

If you wear your Garmin fitness tracker at night also, the sleep data is included in the evaluation of the ENERGIZING COACH.

REQUIREMENT FOR THE INTEGRATION OF THE SLEEP DATA:

- The Garmin fitness tracker is synchronised with the Garmin account before the beginning of the journey.

CALLING UP THE ENERGIZING COACH DISPLAY

Requirements:

- The fitness tracker is connected with your Garmin account.
- Your Garmin account is connected with your Mercedes-Benz user account in the Mercedes-Benz ENERGIZING app.

- The mobile phone is connected to the multimedia system (⟶ page 539).
- You are logged in with your Mercedes-Benz profile both in the vehicle and in the Mercedes-Benz ENERGIZING app.

Multimedia system:

Apps » ENERGIZING COACH

▶ Your current pulse as well as an evaluation of your pulse for the last 30 minutes driving time are shown.

A corresponding fault message is shown if there is no mobile phone connected or no pulse can be sent to the system for an extended period.

ⓘ Only pulse values which fall into the range from 30 - 140 (possibly also 150) bpm will be shown on the media display. The pulse values have no medical validity but are only informative in nature and are therefore also not required to be accurate.

Navigation and traffic

Switching navigation on

Multimedia system:

Navigation

- Alternatively, switch on the MBUX voice assistant (→ page 444).
- Switch to navigation.
  The map appears.

Navigation overview

DIGITAL MAP



1 Navigation module (reduced view)
Route guidance active:
Reduced view of the navigation module shows information relevant to the route, e.g. the next charging stop, the destination and a traffic delay
Tapping opens the navigation module and displays the route overview (→ page 507)
Tapping on the chequered flag ends the current route guidance

2 Sets map orientation and map type

3 Calls up the telephone menu

4 Calls up entertainment applications

5 Navigation window shows the next manoeuvre (zoomed out view) or the route monitor (zoomed in view)
Route guidance active: route monitor shows, e.g. route sections, upcoming driving manoeuvres with lane recommendations, charging stops, destination, traffic delays, 3D images at motorway exits, online content

PRESSING 2 SEVERAL TIMES CHANGES THE MAP ORIENTATION IN THIS ORDER:

- 2D and to the north
- 2D and in the direction of travel
- 3D and in the direction of travel
- Map with complete route

If the map is moved, the map switches between 3D direction of travel and 2D north orientation.

THE FOLLOWING MAP TYPES (2) ARE AVAILABLE:

- Daytime display
- Night-time display
- Satellite map

ⓘ If you notice a problem with the digital map, you can report it at https://mapfeedback.here.com/#/report.

You can watch an animation on this topic via the following link:

Destination entry

NOTES ON DESTINATION ENTRY

⚠ **WARNING**
Risk of distraction from operating integrated communication equipment while the vehicle is in motion

If you operate communication equipment integrated in the vehicle when driving, you could be distracted from the traffic situation. This could also cause you to lose control of the vehicle.

- ► Only operate this equipment when the traffic situation permits.
- ► If you cannot be sure of this, stop the vehicle whilst paying attention to road and traffic conditions and operate the equipment with the vehicle stationary.

You must observe the legal requirements for the country in which you are currently driving when operating the multimedia system.

ENTERING A POI OR ADDRESS

Requirements:

- **For the online search:**
  - There is an Internet connection.
  - Digital Extras are available.
  - You have created a Mercedes me ID.
  - The vehicle is linked to the Mercedes me ID and you have accepted the terms of use.
  - Further information can be found at: https://www.mercedes.me
  - The Digital Extra is available and has been activated.

ⓘ If Online Search is not available, the search is performed using the data of the digital map.

Multimedia system:

→ Navigation

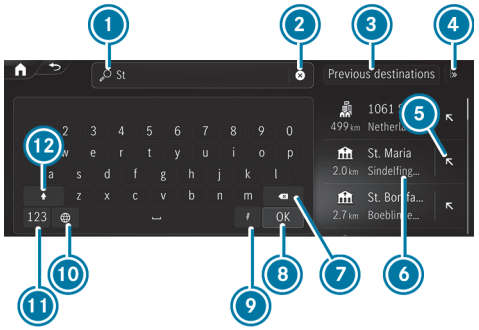

Example: entering a POI or address

1. Input line with current entry
2. Deletes an entry
3. Selects previous destinations
4. Displays and selects additional destination searches
5. Adopts the search result in the input line and continues the search
6. Search result
7. Deletes the last character entered
8. Hides the keypad
9. Activates voice entry.
10. Sets the written language
11. Switches to digits and special characters
12. Switches to upper-case or lower-case letters

If available, selecting the [ ] symbol starts the MBUX Voice Assistant.

- ▶ Enter a destination. The entries can be made in any order.
  The search results are displayed in a list.

ⓘ Online search results for POIs may contain additional information, for example opening times and ratings. The information is provided by an online map service.
This online function is not available in all countries.

THE FOLLOWING ENTRIES CAN BE MADE, FOR EXAMPLE IN (1):

- Town, street, house number or street, town
- Postcode
- POI name or POI category, e.g. Restaurants
- Town, POI name
- Contact name
- Geo-coordinates (→ page 496)

- ▶ Hide the keyboard with [OK].
- ▶ Select the destination in the list.
  The following menu shows the selected destination with the address information and a corresponding map section.
  The menu enables the route to be calculated.

SELECTING A DESTINATION SUGGESTION

Requirements:

- The Allow destination suggestions option is switched on (→ page 480).

- The multimedia system has gathered sufficient data in order to show destination suggestions.

Multimedia system:

Navigation

► Select Suggestions.

The route is calculated in the following menu.

ⓘ If Suggestions has been selected, a menu is available via •••. The menu offers settings for the suggestions and memory functions.

ⓘ Managing destination suggestions (⟶ page 517).

SELECTING PREVIOUS DESTINATIONS

Multimedia system:

Navigation

► Select Previous destinations.

► Select the destination.

The following menu enables the route to be calculated.

ⓘ You can save a destination as a favourite (⟶ page 517).

SELECTING A POI

Requirements:

- **For use of personal POIs:** a USB device is connected with the multimedia system.
- Personal POIs with the GPS Exchange format (.gpx) have been saved in the PersonalPOI folder on the USB device.

Multimedia system:

Navigation

► Select POIs.

► Select one of the displayed quick-access categories, e.g. P .

► Select the POI.

The following menu enables the route to be calculated.

or

► Select All categories or Personal POIs (see requirements).

► Select the category.

► Select the POI.

The following menu enables the route to be calculated.

SETTING A SEARCH FILTER AFTER SELECTING A POI CATEGORY

THE PRESET SEARCH POSITION DEPENDS ON THE STATUS OF THE ROUTE GUIDANCE:

- If route guidance is not active, In the vicinity is searched.
- If route guidance is active, Along the route is searched.

- ► When the search results are displayed, select Filter.
- ► Select the search position, e.g. In the vicinity.
- ► If a route with intermediate destinations already exists and Near destination has been selected in the search filters, the destination is selected for the search.

or

- ► Select the desired travelling time to the point of interest.
- ► Select Search results.

CONFIGURING CATEGORIES FOR QUICK ACCESS

THE CATEGORIES ARE DISPLAYED:

- As symbols after calling up the destination entry via [🔍]
- As a list after calling up All categories

- ► In the POI menu, select All categories.
- ► Select [☆] or [★] for a category.
  Tapping on [☆] adds the category.
  Tapping on [★] removes the category.
- ► Use [↩] to change back.
  The new categories are shown after the destination entry is called up the next time.

ⓘ If all available quick-access positions are full, select the category to be replaced.

CHANGING THE ORDER OF QUICK-ACCESS CATEGORIES

- ► In the POI menu, press and hold a category for quick access.
- ► Tap on the arrows next to the selected category.
  The arrows for the other categories are greyed out.
- ► Drag the category up or down.
- ► Select [✓].

DELETING QUICK-ACCESS CATEGORIES

- ► In the POI menu, press and hold a category for quick access.
- ► Select [★] for the chosen category.
- ► Select Delete.
- ► Select [✓].

CHANGING CATEGORIES FOR PERSONAL POIS

- ► Select Personal POIs.
- ► Press on a category as long as is necessary until a menu appears.
- ► Select Change name and enter a name.
- ► Select Change icon and select a symbol.
- ► Select Delete and confirm the prompt with Yes.

SELECTING A CONTACT FOR DESTINATION ENTRY

Requirements:

- A mobile phone is connected to the multimedia system (⟶ page 539).
- The contacts from the mobile phone have been downloaded .
- The contact has a navigable address.

- The address data can be located on the digital map.

Multimedia system:

→ Navigation ⏩ 🔍

► Enter a contact in the entry line.

► Select the address.

The following menu enables the route to be calculated.

ⓘ Alternatively, after calling up the destination entry, you can enter the name of a contact in the search field.

ENTERING GEO-COORDINATES

Multimedia system:

→ Navigation ⏩ 🔍

► Enter the geo-coordinates as latitude and longitude.

EXAMPLES OF INPUT FORMATS:

- 47°58'11"N 7°57'25"E (degrees, minutes and seconds)
- 47.969722 7.956944 (decimal degrees)

► Confirm the entry.

The following menu enables the route to be calculated.

SELECTING A DESTINATION ON THE MAP

Multimedia system:

→ Navigation

► If necessary, move the map (⟶ page 524).

► Press and hold on the map.

Available destinations are displayed.

or

► Briefly press on a POI symbol.

The POI is selected. If there are several POIs at this map position, a list appears.

► Select the destination in the Selected objects list.

The following menu enables the route to be calculated.

SELECTING A DESTINATION FROM FAVOURITES

Requirements:

- Destinations are saved as favourites.

  Save a previous destination or a destination suggestion as a favourite (⟶ page 517).

Multimedia system:

→ Navigation ⏩ 🔍

► Select Favourites.

► Select a favourite.

The route is calculated in the following menu.

ADDRESSES FOR HOME AND WORK ARE ALREADY SET

► Select Home or Work.

The following menu enables the route to be calculated.

ADDRESSES FOR HOME AND WORK ARE NOT YET SET

- ► Select Home or Work.
  The prompt No "Home" address available. Set address now? appears, for example.
- ► Select Yes.
- ► Search for or select the address.
- ► Select Save.

DELETING FAVOURITES

- ► Select [•••] for a favourite.
- ► Select Delete.

or

- ► Select Delete all.
- ► Confirm the prompt.
  When all the favourites have been deleted, Add favourite is available, for example.

SELECTING RECEIVED DESTINATIONS

Requirements:

- There is an Internet connection for receiving external destinations.
- A destination has been sent to the vehicle.
- Destinations have been shared from another seat in the vehicle.

Multimedia system:

Navigation

The vehicle can receive destinations from Digital Extras. You will be informed when a destination is received.

- ► Select Received destinations.
- ► Select a destination.
  The route is calculated in the following menu.

ⓘ You can save a received destination in the favourites (→ page 517).

DELETING RECEIVED DESTINATIONS

- ► Delete a destination with [🗑].

or

- ► Select Delete all.

Route

CALCULATING A ROUTE WITH ELECTRIC INTELLIGENCE

Requirements:

- The destination has been entered.
- The destination address is shown.
- **For Navigation with Electric Intelligence:**
  - Mercedes-Benz Connect is available.
  - You have a Mercedes me ID and the vehicle is linked to the user account.

- The "Navigation with Electric Intelligence" Digital Extra is available and activated in the Mercedes-Benz Portal.

  The Digital Extras "Navigation with Electric Intelligence", "Display of charging stations" and "Mercedes-Benz Charge" are required for optimum function.
- The Schedule charging stops route option is switched on (→ page 500).

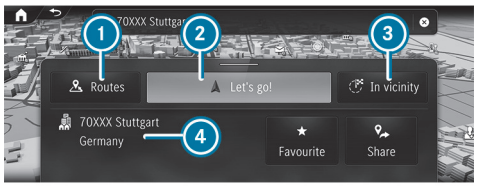

Example: detailed display

1. Calls up alternative routes
2. Calculates the route and starts route guidance
3. Selects a point of interest in the vicinity of the destination
4. Destination address

   The detailed display can contain additional entries, such as a three-word address from what3words, online content

The route with Electric Intelligence is automatically and intelligently calculated to the destination. This is updated during route guidance. The route with Electric Intelligence contains the required charging stops as intermediate destinations. The charging stations are determined taking account of the driving distance and the estimated charging times.

► Select one of the options.

ⓘ When the Schedule charging stops route option is switched off, a route without charging stations is calculated.

SAVING A DESTINATION AS A FAVOURITE

► Select ★ Favourite.

► Select an option.

CALLING UP THE ROUTE OVERVIEW

ⓘ When Schedule charging stops is switched off, this option is available instead of the favourites function.

► Select Routes.

► Select an alternative route.

STARTING ROUTE GUIDANCE

► Select Let's go!.

CALLING UP THE DETAILED DISPLAY WITH DESTINATION ADDRESS

► Pull the bar above the Let's go! symbol upwards.

Depending on the destination selection and availability, online content, for example ratings, prices and weather information, is shown.

If the destination is in a different time zone, a message is displayed.

► **To share a destination:** select Share.

This option allows you to scan the displayed QR code.

► **To call up an Internet address:** if a web address is available, select Browser.

► **To call the destination:** if a telephone number is available, select Call.

SEARCHING FOR POIS IN THE VICINITY OF THE DESTINATION SHOWN

- Select In the vicinity.
- Search using categories, enter a search entry or search for a personal POI (⟶ page 494).

ADDING AN INTERMEDIATE DESTINATION TO THE EXISTING ROUTE OR STARTING A NEW ROUTE GUIDANCE

- Select Add.

  The selected destination address is set as the next intermediate destination. Route guidance begins.
- **There are already four intermediate destinations:** confirm the prompt with Yes and select an intermediate destinations in the route overview (⟶ page 507), that should be overwritten with the new intermediate destination.

or

- Select Replace.

  The selected destination address is set as a new destination. Route guidance begins.

IF YOU CALL UP THE MENU DURING ROUTE GUIDANCE, MORE OPTIONS ARE AVAILABLE:

- To change the order of destinations, select Move (⟶ page 508).
- To delete the destination, select Delete (⟶ page 508).
- To end route guidance, select Cancel route guidance.

OVERVIEW: NAVIGATION WITH ELECTRIC INTELLIGENCE

If the Schedule charging stops route option is enabled, the optimal route based on time is calculated with the required charging stops. The charging stops are determined taking into account the route and charging times and are set as intermediate destinations for route guidance.

Navigation with Electric Intelligence constantly checks a large number of influencing variables, e.g. specifications for the climate control in the vehicle interior or changes in the weather. For each section of the route, the current energy requirement is calculated from the high-voltage battery. The multimedia system determines the ideal charging stations along the route based on availability and charging power.

For each charging stop, the required amount of energy and the expected charging time is calculated and displayed. If the driver wishes, they will be informed by a notification on their mobile phone when the required state of charge is reached. The high-voltage battery continues to charge until the process is interrupted by the driver.

Observe the notes on charging the high-voltage battery (⟶ page 312).

You can influence the route calculated by the Navigation with Electric Intelligence.

The options "Ignore charging station" and "Add charging station" are available for this purpose (⟶ page 507).

NAVIGATION WITH ELECTRIC INTELLIGENCE ATTEMPTS TO SHORTEN THE TOTAL TRAVEL TIME, IF NECESSARY, BY USING THE FOLLOWING CHARGING STRATEGIES:

- Charge twice briefly with high charging power instead of charging once for a long time with low charging power
- Charge once briefly with low charging power to reach a charging station with higher charging power

NAVIGATION WITH ELECTRIC INTELLIGENCE USES THE FOLLOWING DATA:

- Online Route

  Route calculation establishes an Online Route.

  The Online Route is continuously updated during the journey, e.g. if traffic information is available.
- Specific vehicle information

  The current state of charge of the high-voltage battery and electrical consumption are taken into account, for example.
- Charging stations

  These are made available as intermediate destinations in the Online Route.

This function is not available in all countries.

You can watch an animation on this topic via the following link:

SWITCHING ON THE ELECTRIC INTELLIGENCE ROUTE OPTION

Multimedia system:

Navigation » Route

- Switch on the Schedule charging stops route option.

  If the route has been calculated and the state of charge of the high-voltage battery is not sufficient to reach the destination, charging stations are set automatically as intermediate destinations.

This function is not available in all countries.

SELECTING SETTINGS FOR CHARGING STATIONS ON THE ROUTE

Requirements:

- The "Navigation with Electric Intelligence" Digital Extra is available and activated in the Mercedes-Benz Portal.

  The Digital Extras "Navigation with Electric Intelligence", "Display of charging stations" and "Mercedes-Benz Charge" are required for optimum function.

Multimedia system:

Navigation » Route

SETTING THE STATE OF CHARGE OF THE HIGH-VOLTAGE BATTERY WHEN THE CHARGING STATION AND DESTINATION ARE REACHED

- Select Charge level at destination or Charge level at charging stations.
- Move the control knob to the left or right and set the preferred state of charge in percent (%).

To reach a charging station, the system uses the battery capacity, e.g. up to 10 % of the residual energy content (state of charge) or even less. The Min. message appears on the central display. You can increase this state of charge

for the arrival at the charging station and destination, e.g. to 25 % at the charging station and 50 % at the destination.

IN THE EVENT OF INCREASED ENERGY CONSUMPTION WHILE DRIVING, E.G. WITH HEADWIND, THE FOLLOWING OPTIONS ARE AVAILABLE FROM THE SYSTEM:

- The charging station is safely reached even at states of charge of less than 10 %.
- Navigation with Electric Intelligence selects a closer charging station for the route.

If a charging facility is available at the destination, the state of charge can be lowered below 10 %. The Min. message appears on the central display. Make sure that the range monitor is switched on.

When planning a route, you can enter another destination or the return journey. The Navigation with Electric Intelligence then takes into account the required state of charge at the destination. This ensures that an optimal charging station or the new destination is reached safely on the onward journey.

SELECTING A PROVIDER FOR CHARGING STATIONS

► Activate or deactivate MB.CHARGE Public.

If the option is activated, only charging stations payable with Mercedes me Charge are taken into account when selecting the charging station.

or

► Activate All.

All charging stations known to the navigation system are taken into account when calculating routes with Electric Intelligence, regardless of the type of payment.

It may be necessary to register with the provider.

If route guidance is active, the high-voltage battery is tempered before a charging stop depending on the state of charge and the battery temperature.

SWITCHING THE RANGE MONITOR ON OR OFF

Multimedia system:

Navigation » Route

The activated range monitoring assists with messages on the driver and central display to ensure safe arrival at the destination.

► Activate or deactivate Range monitoring.

To reach the destination with the state of charge set by the driver, the range is permanently monitored when the option is switched on.

If necessary, the range monitor in the speedometer shows a recommended maximum speed and informs you in the driver display, e.g. with the message Avoid additional charging stop: drive less than 100 km/h .

Tips for saving energy are then also shown on the central display while driving.

THE RECOMMENDED MAXIMUM SPEED IS ACCOUNTED FOR BY THE FOLLOWING DRIVING SYSTEMS:

- Active Distance Assist DISTRONIC (⟶ page 364)
- Cruise control (⟶ page 358)

This function is not available in all countries.

PAYING FOR CHARGING ON A ROUTE WITH MB.CHARGE PUBLIC

Requirements:

- The Mercedes me Charge service is available and booked in the Mercedes-Benz Portal.
- The Digital Extras "Navigation with Electric Intelligence", "Display of charging stations" and "Mercedes me Charge" are activated.
- **To select a charging station:** the Schedule charging stops option is switched on in the multimedia system.
- **For authentication at the charging station:** after activation in the Mercedes-Benz Portal, you have concluded a charging contract with your payment details with the respective contractual partners.
- **For authentication using the app:** the Mercedes-Benz App is installed on the external device, e.g. tablet or smartphone.
- For charging stations without remote access, you have purchased an RFID card for the contracting partner.

This function is not available in all countries.

Multimedia system:

Navigation

OBSERVE THE FOLLOWING INFORMATION:

- Read the notes on charging the high-voltage battery at the charging station (⟶ page 312).
- Read the notes on charging the high-voltage battery at the charging station (⟶ page 316) and (⟶ page 317).
- **Before selection of a charging station:** the data for the charging stations is based on the online content available from the respective third-party provider.
- Observe the local information and conditions.

With the Plug & Charge charging function of MB.CHARGE Public, you can charge the vehicle at public Plug & Charge-enabled charging stations. The charging process starts immediately when the charging cable is plugged into the charging station. No further authentication is required. Communication between the vehicle and the charging station takes place directly via the charging cable.
This charging function is not available in all countries.

▶ **To select a charging station:** tap on a symbol on the map for a charging station or on a group of symbols for several charging stations.

▶ If a group of symbols is selected, select the charging station from the list.

THE FOLLOWING INFORMATION IS DISPLAYED (IF AVAILABLE):

- Name of the charging station operator
- Address of the charging station
- Plug with availability and information about charging power
- Opening times
- Name of the charging station
- Travel time and distance of the charging station from the vehicle
- Authentication method
- Contact information of the charging station operator
- General costs and charging costs
- Estimated charging costs and your available energy volumes, if available
- Display of available reviews and the ability to review with up to five stars
- Availability prognosis
- Information on green charging

  Mercedes-Benz provides high-quality certificates of origin to ensure that an equivalent amount of electricity from renewable sources is fed into the grid for charging processes carried out via MB.CHARGE Public.

► Calculate the route (⟶ page 497).

ⓘ If the function is available, the start/stop of the charging process can be selected.

► **To access a charging station remotely (start/stop):** select a charging station in the map menu of the app or the MBUX multimedia system.

► Show the details using the widget (programme symbol).

► Select Start charging process.

The charging process starts. In addition, the payment agreement saved with the third-party provider is authorised.

ⓘ Remote access is not available for some charging stations. In this case use your RFID card to activate the charging process (if available).

► If required, enter the PIN for personalisation.

► Confirm the action.

► If required, select the connector ID from the list shown.

The selected charging cable connector is unlocked.

► Start the charging process.

The start of the charging process is shown.

► Select the Stop charging process display button in the app.

The charging process is ended.

Payment is processed automatically.

IF DATA FOR THIRD-PARTY PROVIDERS IS AVAILABLE, YOU WILL RECEIVE THIS INFORMATION:

- Overview of the charging process
- Estimated cost

ⓘ There may be differences between the costs listed and the costs billed.

You can watch an animation on this topic via the following link:

OVERVIEW OF THE DIGITAL EXTRA RANGE DISPLAY

If there are only a few fast-charging stations or charging stations available within the vehicle's electric range, the service warns you with a notification. The notification recommends charging stations made available to the service by charging station providers/operators.

THE FUNCTION IS AVAILABLE UNDER THE FOLLOWING CONDITIONS:

- The fee-based Digital Extra "Range Display" is available and activated in the Mercedes-Benz Portal.
- The route type Online routes is switched off (⟶ page 505).

THERE ARE THREE NOTIFICATION TYPES:

- Comfort warning

  There are no longer enough fast charging stations nearby.
- Warning when electric range falls below 50 km

  As soon as the vehicle falls below the electric range of 50 km, the next charging stations in the vicinity are suggested.
- Critical warning

  There are less than five charging stations including fast charging stations nearby.

ⓘ If you do not want to receive any notifications, deactivate the Allow notifications option for the Digital Extra "Range Display" (⟶ page 471).

In addition, the electric range can be displayed on the map (⟶ page 529).

ⓘ If the electric range of the vehicle is less than 6 km, there is no display on the map. If there are not enough charging stations available within this range, you will receive a notification.

ⓘ If the route type Online routes is switched on, you will not receive any notifications.

OVERVIEW OF CHARGING NEAR DESTINATION

THE FUNCTION IS AVAILABLE UNDER THE FOLLOWING CONDITIONS:

- The destination has been entered.
- The destination address is shown.
- **For Navigation with Electric Intelligence:**
  - Mercedes-Benz Connect is available.
  - You have a Mercedes me ID and the vehicle is linked to the user account.
  - The "Navigation with Electric Intelligence" Digital Extra is available and activated in the Mercedes-Benz Portal.

    The Digital Extras "Navigation with Electric Intelligence", "Display of charging stations" and "Mercedes me Charge" are required for optimum function.

The function suggests the best possible charging stop near the destination from which you can reach the destination on foot.

THE DIGITAL MAP SHOWS THE FOLLOWING INFORMATION, FOR EXAMPLE:

- The route to the destination
- The route to the charging stop

- The pedestrian route from the charging stop to the destination and the walking time in minutes

THE FOLLOWING FUNCTIONS CAN BE USED, FOR EXAMPLE:

- Select the charging station as the destination and calculate the route.
- Move the map and reset the map to the current vehicle position.
- Change the map scale.
- Select additional map symbols, e.g. for displaying traffic information or hazard warnings from Car-2-X.

SELECTING A ROUTE TYPE

Multimedia system:

Navigation » Route

USING TRAILER MODE AND ONLINE ROUTES

The route is calculated as a fast route with a short journey time.

Trailer mode is available if a trailer has been coupled with the vehicle. If available, you can select online routes.

ⓘ Trailer mode and online routes are not available in all countries and for all vehicles.

- ▶ Select Trailer mode.

  A prompt is shown in the multimedia system.

- ▶ Confirm the prompt.

  The arrival time at the destination takes into account a reduced driving speed with trailer.

- ▶ **To use online routes:** switch on the option.

TAKING TRAFFIC INFORMATION FOR THE ROUTE INTO ACCOUNT

- ▶ Select Dynamic route guidance [>].
- ▶ Select one of the options.

EXPLANATION OF THE OPTIONS:

- Automatic

  Traffic reports via Live Traffic Information are taken into account (⟶ page 518).

  Live Traffic Information and FM home screen are not available in all countries.

- After asking

  A prompt appears when a new route is detected with a shorter journey time based on traffic reports. You can continue to use the current route or use the dynamic route instead (⟶ page 505).

- Off

  No traffic reports are taken into account for the route.

CALCULATING ALTERNATIVE ROUTES

Multimedia system:

Navigation » View

- ▶ Activate Overview of route after start.

  Alternative routes are calculated for every route.

ACCEPTING A DETOUR RECOMMENDATION AFTER A PROMPT

Requirements:

- After asking is switched on (⟶ page 505) in the Dynamic route guidance menu.
- Route guidance is active.
- There are traffic reports for the current route.

If a new route with a shorter driving time is determined, the current and new routes will be shown.

If another application is active, a notification is hidden.

- Confirm the notification.
- **To accept the new route:** select Accept.
- **To maintain the current route:** select Keep to current route.

SELECTING ROUTE OPTIONS

Multimedia system:

Navigation » Route » Avoid options

AVOIDING OR USING ROUTE SECTIONS, E.G. MOTORWAYS OR FERRIES

- Activate or deactivate the avoid option.

  Avoid: the option is activated. The route avoids motorways, for example.

  Use: the option is deactivated. The route takes motorways into consideration, for example.

ⓘ The selected route options cannot always be taken into account. Therefore, a route may include a ferry, for instance, even though the Avoid ferries avoid option is enabled. A message then appears and you will hear a corresponding message.

AVOIDING OR USING TOLL ROADS

The use of toll roads requires a usage fee (toll).

- Select Toll roads [>].
- Activate or deactivate Avoid all.

  If the option is activated, the route avoids toll roads.

  If the option is deactivated, the route takes toll roads into account.

or

- Select an option for Payment by cash or card or Electronic billing.

  Avoid: the route avoids toll roads with the selected method of payment.

  Use: the route takes into account roads that require a toll corresponding with the payment type selected.

AVOIDING OR USING ROADS REQUIRING A SPECIAL TOLL STICKER

A vignette allows for the use of a route network for a limited time period.

- Select Avoid vignette roads [>].
- Activate or deactivate Avoid all.

or

- Switch individual countries on or off in the list.

  Avoid: the option is activated. The route avoids roads requiring a special toll sticker in the selected countries.

  Use: the option is deactivated. The route takes into account roads in the selected country which require you to pay a time-based fee (vignette).

ⓘ These route options are not available in every country.

AVOIDING AREAS

- Select Avoid areas [>] (→ page 526).

SELECTING NOTIFICATIONS FOR THE ROUTE

Requirements:

- **For an audible indication when approaching a personal POI:** the USB device contains personal POIs.
- The USB device is connected with the multimedia system.

- The category in which the personal POI belongs is activated.

Multimedia system:

Navigation Messages & tones

SWITCHING NAVIGATION ANNOUNCEMENTS ON OR OFF

► Activate Reduced messages.

If a driving instruction is available for a simple change in direction, you hear a brief announcement, e.g. "Turn right in 200 m". The number of driving instructions along the route is minimised.

► Activate Detailed messages.

If a driving instruction is available and there is a complex driving situation, you hear supplementary information, e.g. "In 200 m turn right and continue to follow the major road". Additional driving instructions are issued for the route, for example on major roads with bends.

► Activate Announce street names.

The name of the street into which the vehicle should turn is announced.

ⓘ This option is not available in all countries and languages.

SWITCHING TRAFFIC ANNOUNCEMENTS ON OR OFF

► Activate or deactivate Announce traffic warnings.

If available, traffic warnings are announced, e.g. before the end of traffic jams that pose a risk.

AUDIBLE INDICATION WHEN APPROACHING A PERSONAL POI

► Select Personal POIs.

► Activate a category.

When approaching a personal POI in the selected category an audible indication will be issued.

DISPLAYING A ROUTE OVERVIEW

Requirements:

- A destination is entered.

Multimedia system:

Navigation

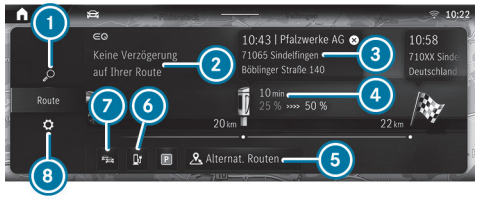

Example: route guidance is active

1. Enters an address or POI
2. Information about delays along the route
3. Arrival time and address for the charging stop
4. Charging stop shows the charging time recommended by the Navigation with Electric Intelligence as well as states of charge on arrival and onward journey for an optimal travel time
   as well as: current distance to charging stop
5. Alternative routes
6. Searches for an additional charging station
7. Switches traffic information display on or off
8. Makes settings for View, Messages & tones and Route

When route guidance is active, the destination and entered intermediate destinations are shown.

DEPENDING ON THE ROUTE, TRAFFIC SITUATION AND AVAILABLE DATA, FURTHER INFORMATION IS DISPLAYED:

- Name, destination address
- Symbols for intermediate destination and destination
- Phone number (if available)
- Web address (if available)
- Traffic information

The route can include up to four intermediate destinations.

You can influence the route calculated by the Navigation with Electric Intelligence using options 3 and 6.

► Select one of the options.

IGNORING A CHARGING STATION

If you do not want to drive to the selected charging station, it can be removed for the current route guidance. The Navigation with Electric Intelligence tries to plan the best possible alternative charging station for the route.

► Select 3 .

The expected charging output, the dynamic charge level display as well as the current state of charge and the predicted charging target are displayed, for example.

► Select Ignore.

► Select Ignore during this journey.

The charging station is removed from the route.

ⓘ After selecting Details, the detailed information about the charging station is displayed.

ADDING A CHARGING STATION

If you want to drive to a charging station on the route earlier than planned, for example, you can search for an additional charging station. If the charging station is suitable for the route, it will be accepted by the Navigation with Electric Intelligence.

► Select 6 .

► If necessary, filter the display of the charging stations according to the charging power.

► Select a charging station.

PLANNING ROUTES

Multimedia system:

Navigation

► Enter the intermediate destination (⟶ page 37).

After entering the destination and new calculation of the route, the route overview is shown again. The route contains a new intermediate destination.

ⓘ If there are already four intermediate destinations, delete an intermediate destination (⟶ page 508).

EDITING A ROUTE WITH INTERMEDIATE DESTINATIONS

Requirements:

- The destination and at least one intermediate destination have been entered.

Multimedia system:

→ Navigation

CHANGING THE ORDER OF THE DESTINATIONS

- In the route overview, press and hold on a destination.
- Move the destination with ◀ or ▶.
- Tap on ✓.
  The editing mode is ended.

DELETING A DESTINATION

- In the route overview, press and hold on a destination.
- Tap on 🗑.
  The editing mode is ended.

DISPLAYING THE ROUTE LIST

Multimedia system:

→ Navigation

- Tap on navigation window (5) on the digital map (→ page 491).



Example: route list

(1) Upcoming manoeuvre with turning arrow, distance to manoeuvre, street number, street name

🔇 Switches on navigation announcements

🔊 Switches off navigation announcements

Including the following route sections on the route to the destination

(2) Current vehicle position

The route sections are displayed in the navigation window. The route list is updated during the journey.

ⓘ Motorway information shows the available service facilities. After selecting symbols, e.g. for car parks, service areas or motorway exits, the POI is adopted as an intermediate destination or destination.

- Press the arrow at the bottom of the navigation window briefly.
- Swipe up or down.
- Select a route section.
  The map section is displayed.
- **To return to vehicle position:** select Current position.

SELECTING AN ALTERNATIVE ROUTE

Requirements:

- A route has already been created.
- The Overview of route after start option is switched on (→ page 505).

Multimedia system:

Navigation Other routes



Example: alternative routes

(1) Original route is highlighted

(2) Alternative routes with indication of the difference in driving time

ⓘ In (2) a faster route may also be shown that is considerably longer.

THE FOLLOWING ROUTE INFORMATION IS DISPLAYED:

- Driving time
- Time of arrival
- Distance to the destination
- Avoid options based on the set route options
- Driving time saved or lost compared with the original route

► When the alternative routes have been calculated, display the route in the navigation window by swiping to the right or left.

CHANGING ROUTE TYPE

► Select Filter.

► Switching the route type on or off.

AVOIDING OR USING ROUTE OPTIONS

► Select Filter.

► Switch the route options on or off (⟶ page 506).

► Confirm the settings with Finished.

► **To start route guidance to the alternative route:** select Start.

► **To select an alternative route on the map:** touch any point on the alternative route.

The alternative route is highlighted.

ACTIVATING A COMMUTER ROUTE

Requirements:

- You have created a profile (⟶ page 465).
- The Allow destination suggestions option is switched on (⟶ page 480).
- The Commuter route option is switched on .
- The multimedia system has gathered sufficient data in order to show destination suggestions.
- Routes have been learned for these destination suggestions.
- Route guidance is active.

ⓘ This commuter route is not available in all countries.

Multimedia system:

→ Navigation » Route

- ► Activate Commuter route.

  The navigation system automatically detects that the vehicle is on a commuter route.

  For the daily commuter route, traffic incidents on the route are also reported when driving without active route guidance.
- ► **To select commuter route:** select Start.

  Route guidance begins without spoken driving instructions.

ⓘ A commuter route is suggested even with delays on the route.

- ► **To delete a commuter route:** select ×.

STARTING THE AUTOMATIC SERVICE STATION SEARCH

Requirements

- ATTENTION ASSIST is activated (⟶ page 356).
- You are driving on a motorway.
- There are service stations along the route section ahead.

DRIVING SITUATION

- ► Confirm the notification.

  The service station search starts. The available service stations along the route or in the vicinity of the vehicle's current position are displayed.
- ► Select a service station.
- ► Calculate the route with the service station as an intermediate destination or as a destination (⟶ page 497).
- ► **If there are already four intermediate destinations:** select Yes in the prompt.

  The selected service station is entered in the route overview at position 1. Intermediate destination 4 is deleted. Route guidance begins.

STARTING AND EDITING A STORED ROUTE

Requirements:

- A USB device with stored routes is connected with the multimedia system (⟶ page 585).
- The route is stored in the "Routes" folder with the GPS Exchange data format (.gpx).

Multimedia system:

→ Navigation »

- ► Press the double arrow in the destination input line until Stored routes is displayed.
- ► Select Stored routes.

STARTING A SAVED ROUTE

- ► Select a route.
- ► Select Start: route guidance at start or Start: current location.

  Route guidance begins.

RENAMING A ROUTE

- ► Press on a route until a menu is shown.
- ► Select Rename.

► Enter the name.

► Select OK.

RECORDING AND STORING A ROUTE

Requirements:

- A USB device is connected with the multimedia system (⟶ page 585).

Multimedia system:

→ ⌂ » Navigation » 🔍

► Press the double arrow in the destination input line until Stored routes is displayed.

► Select Stored routes.

STARTING RECORDING

► Select Start recording.

A white rectangle is displayed.

The route is stored on the USB device.

STOPPING RECORDING

► Press the white rectangle.

► Select End recording.

Route guidance

NOTES ON ROUTE GUIDANCE

⚠ WARNING
Risk of distraction from operating integrated communication equipment while the vehicle is in motion

If you operate communication equipment integrated in the vehicle when driving, you could be distracted from the traffic situation. This could also cause you to lose control of the vehicle.

► Only operate this equipment when the traffic situation permits.

► If you cannot be sure of this, stop the vehicle whilst paying attention to road and traffic conditions and operate the equipment with the vehicle stationary.

You must observe the legal requirements for the country in which you are currently driving when operating the multimedia system.
Route guidance begins once a route has been calculated. The road and traffic rules and regulations always have priority over multimedia system driving instructions. Driving instructions are, for example navigation announcements, changes in direction and lane recommendations.

Changes in direction and lane recommendations are shown in the navigation window.

THE FOLLOWING DISPLAYS AND FUNCTIONS ARE ALSO AVAILABLE IN THE NAVIGATION WINDOW, FOR EXAMPLE:

- Route list
- Destination information

- Traffic information, e.g. length of traffic jam, delay
- Motorway facilities
- Car park search
- Emergency corridors

If you do not follow the driving instructions or if you leave the calculated route, a new route is calculated automatically.

If, for example, the route is diverted or the direction of a one-way road has been reversed, driving instructions may deviate from the actual traffic situation.

Alternatives may be offered during route guidance, e.g. before passing a motorway exit road. The additional driving time for the journey along the motorway exit is shown.

For this reason, you must always observe road and traffic rules and regulations during your journey as well as the prevailing traffic conditions.

The route can differ from the ideal route, for example in the event of roadworks or incomplete digital map data.

NOTES ON SATELLITE RECEPTION

The correct function of the navigation system depends amongst other things on reception of the satellite system used. In certain situations satellite reception can be impaired, malfunction or even not be possible, e.g. in tunnels or in multi-storey car parks.

CHANGING DIRECTION OVERVIEW

CHANGES OF DIRECTION ARE SHOWN IN THE FOLLOWING DISPLAYS:

- Detailed image of the junction

  The display appears when you drive into a junction.
- 3D image

  The display appears when driving on junction-free, multi-lane roads, for example at motorway exits and motorway interchanges.

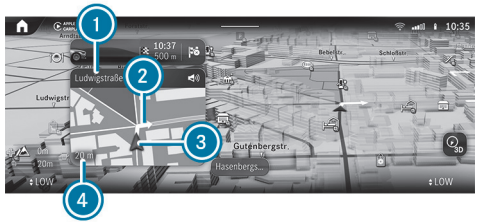

Example: detailed image of the crossing with upcoming changes of direction

1. Name of the street to turn into
2. Change of direction arrow (also on the map)
3. Current vehicle position
4. Current distance to the change of direction



Example: 3D image of the upcoming change of direction

1. Manoeuvre point
2. Change of direction arrow (also on the map)

   Larger map scales show change of direction points instead of change of direction arrows.
3. Current distance to the change of direction
4. Current vehicle position

THERE ARE THREE PHASES WHEN CHANGING DIRECTION:

- Preparation phase

  If there is enough time between the changes of direction, the multimedia system prepares you for the upcoming change of direction. A navigation announcement is issued, e.g. "Prepare to turn right".

  The navigation window shows: the direction information or the name of the road which is to be turned into as well as the distance to the change of direction.
- Announcement phase

  The multimedia system announces the upcoming change of direction, e.g. by announcing "Turn right in 300 m".

  When the Auto zoom map orientation is switched off (⟶ page 528), a detailed representation of the junction or a 3D image of the upcoming change in direction appears in the navigation window.
- Change-of-direction phase

  The multimedia system announces the imminent change of direction, e.g. by announcing "Now turn right".

  Example of 3D image: when the distance to manoeuvre point ① is shown with 0 m and the symbol for current vehicle position ④ has reached manoeuvre point ① the change in direction is carried out.

ⓘ Changes in direction are also displayed on the driver display and head-up display.

LANE RECOMMENDATIONS OVERVIEW



Example: lane recommendations

① Non-recommended lane (grey arrow)

② Possible lane (white arrow)

③ Recommended lane (white arrow, blue background)

This display appears for multi-lane roads.

If the digital map contains the relevant data, lane recommendations are displayed in the navigation window.

EXPLANATION OF THE DISPLAYED LANES:

- Recommended lane

  In this lane, you will be able to complete both the next change of direction and the one after that.
- Possible lane

  In this lane, you will only be able to complete the next change of direction.
- Non-recommended lane

  In this lane, you will not be able to complete the next change of direction without changing lane.

During the change of direction, new lanes may be added. Bus lanes are also shown.

Lane recommendations are also displayed on the driver display and head-up display.

USING MOTORWAY INFORMATION

When driving on the motorway, upcoming motorway facilities and available service facilities are shown in the route list. These include car parks, service stations or motorway exits with service POIs, for example.

The entries are sorted according to increasing distance from the current vehicle position.

- Select an entry.
- If several service facilities are available, select a service facility from the list.

  The destination address and the map position are shown.
- Calculate the route (⟶ page 497).

or

- Search for a POI in the vicinity.

or

- Use other functions, e.g. store the destination address of the service facility.

DESTINATION REACHED

Once the destination is reached, you will see the chequered flag. Route guidance will now be complete. The navigation menu is shown.

When an intermediate destination has been reached, you will see the intermediate destination flag with the number of your intermediate destination. Route guidance is continued.

SWITCHING NAVIGATION ANNOUNCEMENTS ON OR OFF

SWITCHING OFF

- During a navigation announcement, press the button on the steering wheel or controller in the centre console.

  The Spoken driving recommendations have been deactivated. message appears.

or

- In the route list for a driving manoeuvre select (⟶ page 509).

  The symbol changes to .

SWITCHING ON

- Press the button on the steering wheel or on the controller in the centre console again.

or

- In the navigation window, select for an upcoming driving manoeuvre.

  The current navigation announcement is played.

  The symbol changes to .

SWITCHING NAVIGATION ANNOUNCEMENTS ON OR OFF DURING A PHONE CALL

- Press the button on the steering wheel on the right.

or

- Tap on in the media display.
- Select Settings.
- Select System.

- Select Audio.
- Select Navigation & traffic announcements.
- Activate or deactivate Driving recommendations during call.
- **To leave the menu:** select [↩].

ADJUSTING THE VOLUME OF NAVIGATION ANNOUNCEMENTS

Multimedia system:

[⌂] » Settings » System » Audio » Navigation & traffic announcements

- Select Driving recommendation vol..
- Set the volume.
- **To leave the menu:** select [↩].

ROUTE GUIDANCE IS ACTIVE

SWITCHING AUDIO FADEOUT ON OR OFF DURING NAVIGATION ANNOUNCEMENTS

- Press the [⌂] button on the steering wheel on the right.

or

- Tap [⌂] on the central display.
- Select Settings.
- Select System.
- Select Audio.
- Select Navigation & traffic announcements.
- Activate or deactivate Audio fadeout during navigation announcements.
- **To leave the menu:** select [↩].

REPEATING NAVIGATION ANNOUNCEMENTS

Requirements:

- A route has already been created.
- Route guidance is active.

Multimedia system:

[⌂] » Navigation

- In the navigation window, select [🔊] for an upcoming driving manoeuvre.
- Select [🔇].
  The current navigation announcement is repeated.

CANCELLING ROUTE GUIDANCE

Requirements:

- A route has already been created.
- Route guidance is active.

- Show the navigation menu.
- Select [✕] in the navigation menu (⟶ page 491).

OVERVIEW OF OFF-ROAD STATUS DURING ROUTE GUIDANCE

Due to roadworks, for example, there may be differences between the data on the digital map and the actual course of the road. In such cases, the multimedia system will temporarily be unable to locate the vehicle's current position on the digital map. The vehicle is off-road. Road not mapped will be shown. Route guidance may be restricted.

When the vehicle is back on a road known to the multimedia system, route guidance continues as normal.

Destination

SAVING THE CURRENT VEHICLE POSITION

Multimedia system:

Navigation

- When the map is shown, tap on the current vehicle position.
- Select Store position.
- **To save as a favourite:** select Save as favourite .
- **To save as "Home" address:** select Home .
- **To save as "Work" address:** select Work .

MANAGING PREVIOUS DESTINATIONS

Multimedia system:

Navigation

- Select Previous destinations.
- Select ••• for the last destination.

SAVING THE LAST DESTINATION AS A FAVOURITE

- Press and hold on one of the previous destinations.
  A menu appears.
- **To save as a favourite:** select Save as favourite .
- **To save as "Home" address:** select Home .
- **To save as "Work" address:** select Work .

DELETING A PREVIOUS DESTINATION

- Select Previous destinations.
- Select ••• for the last destination.
- Select Delete.

or

- Select Delete all.
- Confirm the prompt.
  When all the favourites have been deleted, Add favourite is available, for example.

EDITING DESTINATION SUGGESTIONS

Requirements:

- The Allow destination suggestions option is switched on (⟶ page 480).
- For the display of destination suggestions: the multimedia system has gathered sufficient data.

Multimedia system:

Navigation

- Select Suggestions.
- Press and hold on a destination suggestion.
  A menu appears.
- **To cancel a destination suggestion:** select Do not suggest now or No longer suggest.
- **To save a destination suggestion:** select Save as favourite, Home or Work.

ⓘ Delete a destination suggestion from the favourites (⟶ page 496).

Route guidance with current traffic reports

TRAFFIC INFORMATION OVERVIEW

Current traffic reports are received with the Live Traffic Information subscription service.

If the subscription has expired, then FM RDS-TMC is available in selected countries.

ⓘ Live Traffic Information is not available in all countries.

The Digital Extra must be registered (⟶ page 518). This secures the free-of-charge period of three years.

The Digital Extra updates the traffic situation at short, regular intervals via the internet connection.

Information on the vehicle's position is regularly sent to Mercedes-Benz AG. The data is immediately rendered anonymous by Mercedes-Benz AG and forwarded to the traffic data provider. Using this data, traffic reports relevant to the vehicle's position are sent to the vehicle. The vehicle acts as a sensor for the flow of traffic and helps to improve the quality of the traffic reports.

ⓘ There may be differences between the traffic reports received and the actual road and traffic conditions.

IF YOU DO NOT WANT TO TRANSMIT THE VEHICLE POSITION, YOU HAVE THE FOLLOWING OPTIONS:

- You can deactivate the Digital Extra in your Mercedes me ID.
- You can have the Digital Extra deactivated at a Mercedes-Benz service centre.

ⓘ Further hazard warnings are received via the Car-to-X Digital Extra (⟶ page 521).

SHOWING INFORMATION FROM THE SERVICE PROVIDER FOR LIVE TRAFFIC INFORMATION

Requirements:

- The vehicle is equipped with Live Traffic Information.

Multimedia system:

⟶ ⌂ ⏩ Apps ⏩ Mercedes me ⏩ My Digital Extras

▶ Select Live Traffic.

When the subscription for Live Traffic Information has expired then in selected countries FM RDS-TMC is available.

REGISTERING LIVE TRAFFIC INFORMATION

Requirements:

- The vehicle is equipped with Live Traffic Information.
- You have a Mercedes me ID.

- ▶ Create a Mercedes me ID at: https://www.mercedes.me. A valid email address is required for this.
- ▶ Register the vehicle using the vehicle identification number (VIN).
- ▶ Link the vehicle to your Mercedes me ID.
  A code is sent to the multimedia system.
- ▶ Enter the code into the multimedia system.
- ▶ Accept the general and specific terms of use.

ⓘ Alternatively, you can have the connection completed at a Mercedes-Benz service centre.

EXTENDING A LIVE TRAFFIC INFORMATION SUBSCRIPTION

Requirements:

- The vehicle is equipped with Live Traffic Information.
- You have a Mercedes me ID.

- ▶ Visit the Mercedes-Benz website.
- ▶ Log in with the Mercedes me ID.
- ▶ Switch to the Mercedes-Benz Store via the linked vehicle.
- ▶ Select Live Traffic Information.
- ▶ Select the renewal period.
- ▶ Add the product to the shopping basket.
- ▶ Accept the general and specific terms of use.
  Live Traffic Information remains activated for the selected extension period. Activation begins on the date of extension.

DISPLAYING TRAFFIC INFORMATION ON THE MAP

Requirements:

- Traffic incidents and Free-flowing traffic are switched on (⟶ page 521).

Multimedia system:



- ▶ If necessary, move the map (⟶ page 524).

THE MAP SHOWS THE FOLLOWING TRAFFIC INFORMATION DEPENDING ON THE ACTIVATED SETTINGS:

- Traffic incidents
  These are roadworks, road blocks and warning messages, for example.
  When route guidance is active, the symbols for traffic incidents will be shown in colour on the route. Off the route they are grey.
- Warning messages
  Warning messages are shown as the ⚠ symbol.
  Traffic safety information can be shown, e.g. if there are people on the carriageway.
  If the vehicle approaches a danger area, for example the end of a traffic jam in a dangerous position, the ⚠ symbol is shown on the map. If Announce traffic warnings is switched on and a message has been issued, an additional announcement is made.
- Traffic flow information:
  - Traffic jam (red line)
  - Slow-moving traffic (orange line)

- Heavy traffic (yellow line)
- Free-flowing traffic (green line)

- Display for traffic delays on the current route
  The smallest value for the display for traffic delays is a minute.

SHOWING TRAFFIC INCIDENTS ON THE ROUTE

Requirements:

- The Traffic incidents display is switched on (⟶ page 521).

Multimedia system:

Navigation

If there are traffic incidents on the route, these are shown on the map and in the route overview.

ⓘ With the MBUX Voice Assistant you can inform yourself about traffic incidents on your route. Ask, for example How is the traffic on my route? or How is the traffic at home?. A voice output is issued.



Example: traffic incidents on the route

1 Total delay or message that there are no delays along the route

2 Switches traffic information display on or off

3 Calls up settings for View, Messages & tones and Route

IF THERE ARE ANY DELAYS ALONG THE ROUTE, THESE ARE SHOWN IN THE ROUTE OVERVIEW TOGETHER WITH THE FOLLOWING INFORMATION:

- Traffic jam section: red bars
- Slow-moving traffic: orange bar
- Heavy traffic: yellow bar
- For each section:
  - The delay
  - The length
  - The street name or the street number

ⓘ **DURING ACTIVE ROUTE GUIDANCE, THE TOTAL DELAY ON THE ROUTE IS ALSO DISPLAYED HERE:**

- in the navigation system in the navigation module
- in other applications in the status line at the top

Traffic incident symbols are shown in the route overview and in the map. A traffic incident symbol is, for example for roadworks.
In the map several traffic incidents may be shown on top of each other. The traffic incident symbol shows a plus sign.
If available, the street number can be replaced by a street name or both the name and number.

If a message about forming an emergency corridor has been issued, Emergency corridor is shown in the navigation window.

- To see all of the traffic incidents on the route, swipe to the right or left.
  The route section is highlighted on the map.
- **To show detailed information in the route overview:** tap on a display in the route overview.
  The detailed information is shown, for example the road section and the direction.

CALLING UP DETAILED INFORMATION ON THE MAP

- Tap on traffic flow information on the map, e.g. a red line for a traffic jam section.
  The detail information is displayed.
- If several lines are shown on top of the other, then select an item of traffic flow information from the list.

SHOWING TRAFFIC INCIDENTS ON THE MAP

- Tap on a traffic incident symbol.
  The detail information is displayed.
- **Several traffic incidents are in the immediate vicinity:** tap on the top traffic incident symbol and select from the list of traffic incidents.

SWITCHING THE TRAFFIC INFORMATION DISPLAY ON

Multimedia system:

→ Navigation

- Select View.
- Traffic .
- Activate Traffic incidents and Free-flowing traffic.
  Traffic incidents, for example roadworks, local area reports (e.g. fog) and warning messages, are shown on the route.

Car-to-X-Communication

CAR-TO-X-COMMUNICATION OVERVIEW

THE FOLLOWING REQUIREMENTS APPLY FOR THE DIGITAL EXTRA CAR-TO-X-COMMUNICATION:

- The vehicle is equipped with an MBUX multimedia system with navigation function.
- There is a subscription for the Live Traffic Information service.
- Car-to-X-Communication is activated in your Mercedes-Benz user account.

Car-to-X-Communication is available in selected countries.

The communication module automatically establishes an Internet connection once the vehicle is switched on. If there are any hazard warnings, they will be provided shortly thereafter. Depending on the mobile phone connection, provision takes place from within a second up to about a minute.

BENEFITS OF CAR-TO-X-COMMUNICATION:

- Dangers are automatically detected by the vehicle or can be reported by the driver. These are then sent to vehicles with Car-to-X-Communication in the immediate vicinity.
- If available, current details relating to hazard spots near the vehicle's current position are received.

This gives you sufficient time to adapt your driving style to the traffic conditions.

The use of Car-to-X-Communication requires the regular transmission of vehicle data to Mercedes-Benz AG. The data is then immediately pseudonymised by Mercedes-Benz AG. The vehicle data is deleted after an appropriate amount of time has elapsed (several weeks) and is not stored permanently.

ⓘ Data which serves as identification is replaced during the pseudonymisation process. In this way, your identity is protected against access by unauthorised third parties.

DISPLAYING HAZARD WARNINGS

Multimedia system:

→ Navigation

If hazard warnings are available these can be shown as symbols on the map. The display depends on the settings for the Traffic incidents option.

- ► Set the option via ⚙ (⟶ page 521).

  If the option is activated, all of the symbols are shown.

  If the option is deactivated, the symbols are only shown when there is a hazard warning.

THE FOLLOWING HAZARDS MAY BE SHOWN ON THE MAP:

- Accidents and breakdowns
- Slippery roads, fog, crosswinds and heavy rain
- Hazards reported manually
- Vehicle with active hazard warning light
- Roadworks
- Additional hazards (if available)

ⓘ If Announce traffic warnings is switched off (⟶ page 506), voice output can indicate a danger area.

SENDING HAZARD WARNINGS

REPORTING HAZARDS MANUALLY

ⓘ Automatically detected hazard warnings are sent by the vehicle.

- ► When the map is shown, tap on the current vehicle position.

  The Position menu is shown.

- ► Select Report traffic incident.

  A prompt is shown.

- ► Select Yes.

  The Thank you for supporting accident prevention! message appears.

Route guidance with augmented reality

OVERVIEW OF ROUTE GUIDANCE WITH AUGMENTED REALITY

WARNING
Risk of accident and injury as a result of distraction, incorrect depiction or wrong interpretation of the display

The camera image of the augmented reality display is not suitable as a guide for driving.

- Always keep an eye on the actual traffic situation.
- Avoid extended observation of the camera image.

During route guidance with augmented reality a camera image with the real traffic scene is shown in the media display before a turning manoeuvre. The camera image includes additional information, for example arrows indicating a change of direction.

If the options are switched on and this additional information is available, road names and house numbers are displayed (⟶ page 523).

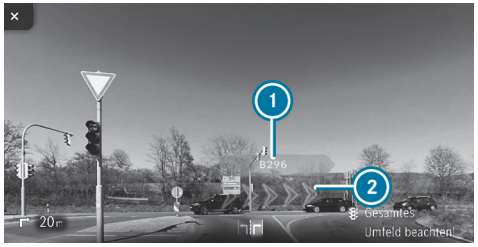

1 Street name
2 Change of direction arrow

Route guidance with augmented reality will not be available in some situations, e.g. in the event of poor satellite reception or roads that have not been digitised.

Route guidance with augmented reality is not available in all countries.

You can watch an animation on this topic via the following link:

ACTIVATING ROUTE GUIDANCE WITH AUGMENTED REALITY

WARNING
Risk of accident and injury due to imprecise positioning of additional information

The additional information from the augmented reality display may be inaccurate and is not a substitute for observing and assessing the actual driving situation.

- Always keep an eye on the actual traffic situation when carrying out all driving manoeuvres.

Multimedia system:

Navigation

- Select View.
- Select Augmented reality video.
- Activate or deactivate Augmented reality video.

SHOWING PROPERTY INFORMATION FOR ROUTE GUIDANCE WITH AUGMENTED REALITY

Requirements:

- Augmented reality is activated (⟶ page 523).

Multimedia system:

Navigation

- Select View.
- Select Augmented reality video.
- Activate Street names and House numbers.

  During route guidance, the activated options are shown as additional information in the camera image.

Map

SETTING THE MAP SCALE

Multimedia system:

Navigation

ZOOMING IN

- When the map is shown, tap twice quickly with one finger on the media display.

or

- Move two fingers apart on the media display.

ZOOMING OUT

- Tap with two fingers on the media display.

or

- Move two fingers together on the media display.

ⓘ You can set the unit of measurement of the map scale (⟶ page 480).

MOVING THE MAP

Multimedia system:

Navigation

- When the map is displayed, swipe in any direction with one finger on the media display.

THE FOLLOWING FUNCTIONS ARE AVAILABLE:

- Selecting a destination on the map (⟶ page 496).
- Selecting a POI (⟶ page 494).
- Showing traffic incidents on the map (⟶ page 520).

- **To reset the map to the current vehicle position:** select Centre .

SWITCHING THE ROUTE OVERVIEW AFTER START ON OR OFF

Multimedia system:

Navigation

- Select View.
- Activate or deactivate Overview of route after start.

  If the option is enabled, the map shows the full route after route guidance is started and, if available, all alternative routes.

SELECTING POI SYMBOLS FOR THE MAP DISPLAY

Multimedia system:

Navigation

POIs include restaurants and hotels, for example. These are displayed as symbols on the map. Not all POIs are available in all countries.

Personal POIs are destinations which you have saved on a USB device, for example.

The display of POI symbols on the map can be activated or deactivated as a favourite.

- Select View.
- Select POI symbols on map [>].
- Activate Hide all points of interest.

  If the option is switched off, POI symbols are displayed on the map which correspond to the settings in the POI categories.

If the conditions are fulfilled, the POI symbols are shown with current online information (⟶ page 529).

SWITCHING DISPLAY OF CATEGORIES FOR QUICK-ACCESS ON OR OFF

- Switch a category on or off in the menu.

SELECTING CATEGORIES

- In the menu, select Other categories [>].
- Activate or deactivate Show all.

  When the option is switched on, the POI symbols for all categories are shown on the map.

or

- Select [>] the categories.
- Activate or deactivate the categories.

  The POI symbols for the selected categories are shown on the map.

SELECTING PERSONAL POI CATEGORIES

- In the menu, select Personal POIs [>].
- Select [>] a category.
- Activate or deactivate Display on the map.
- **To issue a signal when approaching:** activate Visual warning and Acoustic notification.

RESETTING THE POI SYMBOL DISPLAY

- In the menu, select Reset POIs.

  The settings are reset to the standard settings.

SELECTING THE DISPLAY OF ADDITIONAL INFORMATION ON THE MAP

Multimedia system:

[Home] ▸▸ Navigation ▸▸ [Settings]

- Select View.
- Select Show additional information.
- Switch the options on or off.

THE FOLLOWING OPTIONS ARE AVAILABLE:

- Current street

  If the option is enabled, it will be displayed in the navigation window.
- Scale

  If the option is switched off, the map scale is only displayed on the map when zooming.

  If the option is enabled, the map scale is permanently displayed on the map.

  The option also influences the display on the driver display.
- Altitude

- Next junction

  If the option is switched on and the journey continues without route guidance, the name of the next intersecting street will be displayed in the navigation window.

DISPLAYING THE MAP VERSION

Multimedia system:

Navigation

- Select View.
- Select Map data version.

  The detail information is displayed.

ⓘ You can update the map data with the Online Map Update Digital Extra (⟶ page 36).

ⓘ Information about new versions of the digital map can be obtained from a Mercedes-Benz service centre.

OVERVIEW OF AREA AVOIDANCE ON THE ROUTE

You can define areas along a route that you would like to avoid.

Motorways or multi-lane expressways that pass through an area to be avoided may be included in the route despite being blocked.

AVOIDING A NEW AREA FOR THE ROUTE

Multimedia system:

Navigation Route Avoid areas

- Select Avoid new area.

STARTING USING THE MAP

- Select Using map.

  A red rectangle appears. This designates the area that should be avoided.
- Move the map (⟶ page 524).
- Set the map scale (⟶ page 524).
- Select OK.

  The area is entered into the list.

STARTING USING DESTINATION SEARCH

- Select Via address entry.
- Enter the address (⟶ page 37).
- Select the destination in the list.

  The map appears. The area is saved.

CHANGING AN AREA TO BE AVOIDED

Multimedia system:

Navigation Route Avoid areas

- Select an area in the list.
- Select Edit.
- **To move an area on the map:** swipe in any direction on the media display.

CHANGING THE SIZE OF THE AREA

- Move two fingers apart or together on the media display.
- Select OK.

  The area is entered into the list.

TAKING THE AREA FOR THE ROUTE INTO ACCOUNT

- ► Select the area in the list.
- ► Activate Avoid area.

  If route guidance is active, a new route is calculated.

  If there is no route yet, the setting is carried over to the next route guidance.

  THE ROUTE CAN INCLUDE AN AREA THAT IS TO BE AVOIDED IN THE FOLLOWING CASES:

  - The destination is located in an area that is to be avoided.
  - The route includes motorways or multi-lane expressways which pass through an area to be avoided.
  - There is no practical alternative route.

DELETING AN AREA TO BE AVOIDED

Multimedia system:

Navigation » Route » Avoid areas

DELETING AN AREA TO BE AVOIDED

- ► Select an area in the list.
- ► Select Delete.
- ► Confirm the prompt with Yes.

DELETING ALL AREAS TO BE AVOIDED

- ► If at least two areas to be avoided are set, select Delete all.
- ► Confirm the prompt with Yes.

MAP DATA UPDATE OVERVIEW

As the content of a digital road map has a short life, outdated data may have a negative effect on all navigation functions. For the best MBUX navigation experience, you should install all of the map updates offered by Mercedes-Benz.

THE FOLLOWING OPTIONS ARE AVAILABLE FOR THE UPDATE OF MAP DATA:

- Online map update
- Updates via the Mercedes-Benz Portal
- Update at a Mercedes-Benz service centre

  Additional costs can be incurred in this process.

ONLINE MAP UPDATE

REQUIREMENTS:

- Digital Extras are available.
- You have a Mercedes me ID.
- The Digital Extra Online Map Update is available for your region.
- Online Map Update has been activated.

ⓘ Online Map Update is only available in certain countries.

Installation takes place in the background as an automatic map update.

The MBUX multimedia system installs all of the available map updates for the European regions in which the vehicle is located or is moved.

The online map update is activated at the latest after the next time the vehicle is switched on.

UPDATES VIA THE MERCEDES-BENZ PORTAL

The map data for several regions can also be updated manually. Log in with your Mercedes-Benz user account at: https://www.mercedes-benz.de/

Click on your account at the top right and follow the menu path My dashboard > Manage vehicle > Manage Digital Extras > Online Map Update. Select the regions to be downloaded to a storage medium.

After the map data has been copied, connect the storage medium with your vehicle. Select the notification with information about a new version of the map data and start the installation. After the MBUX multimedia system has been restarted, the updated map data is used.

OVERVIEW OF MAP DATA

If map data is reinstalled in a vehicle, no activation code needs to be entered.

For map data purchased as data media, the enclosed activation code must be entered after starting the installation.

Activation codes are only ever valid for one vehicle.

IN THE EVENT OF THE FOLLOWING PROBLEMS, PLEASE CONTACT A MERCEDES-BENZ SERVICE CENTRE:

- The multimedia system does not accept the activation code.
- You have lost the activation code.

DISPLAYING THE COMPASS

Multimedia system:

Navigation

- When the map is shown, tap on the current vehicle position until the Position menu is shown.
- Select Compass.

THE COMPASS DISPLAY SHOWS THE FOLLOWING INFORMATION:

- The current direction of travel with bearing (360° format) and compass direction
- Longitude and latitude coordinates in degrees, minutes and seconds
- Number of satellites from which a signal can be received

The information is not available in every country.

DISPLAYING QIBLA

Multimedia system:

Navigation

- When the map is shown, tap on the current vehicle position until the Position menu is shown.
- Select Alerts.

  The arrow on the compass shows the direction to Mecca in relation to the current direction of travel.

  The number of satellites received is shown.

ⓘ This function is not available in all countries.

SETTING THE MAP SCALE AUTOMATICALLY

Multimedia system:

Navigation

- Select View.
- Activate Auto zoom.

  When the option is switched on, the map scale is set automatically depending on your driving speed and the type of road.

ⓘ The automatically selected map scale can be changed manually. After a few seconds, this is automatically reset.

When the option is activated, no detailed display of the junction or a 3D image is shown in the navigation window during an upcoming driving manoeuvre.

DISPLAYING THE SATELLITE MAP

Multimedia system:

Navigation

- Select View.
- Activate or deactivate Satellite map.

  WHEN SATELLITE MAP IS SELECTED, THEY ARE DISPLAYED AT THE FOLLOWING MAP SCALES:

  - On-board maps

    The satellite maps are displayed in map scales from 2 km.
  - Online maps

    The satellite maps are displayed in high-resolution map scales from 10 m.

  When Satellite map is not selected, no satellite maps are displayed.

ⓘ The satellite maps for these map scales are not available in all countries.

SHOWING ELECTRIC RANGE ON THE MAP

Requirements:

- There is an Internet connection.
- Mercedes-Benz Connect is available.
- You have a Mercedes me ID.
- The vehicle is linked to your Mercedes me ID and you have accepted the Mercedes-Benz Connect terms of use.

  Further information can be found at: https://www.mercedes.me
- The fee-based Digital Extra Range Display is available and has been activated.

Multimedia system:

Navigation

- Select View.
- Range .

  The electric range is shown on the map with a white line around the current vehicle position.

ⓘ The electric range display on the map is not available in all countries.

DISPLAYING ONLINE MAP CONTENTS

Requirements:

- There is an Internet connection.
- Digital Extras are available.
- You have a Mercedes me ID.
- The vehicle is linked to the Mercedes me ID and you have accepted the Mercedes-Benz terms of use.

  Further information can be found at: https://www.mercedes.me
- The Digital Extra is available and has been activated.

Multimedia system:

Navigation

► Select View.

► Switch on a Digital Extra, e.g. Weather.

Current weather information is displayed on the navigation map, e.g. temperature or cloud cover.

The information provided by the Digital Extras is not displayed in all map scales, e.g. weather symbols.

ⓘ The display of online map content is not available in all countries.

Parking service

NOTES ON THE PARKING SERVICE

NOTE

Vehicle damage due to failure to observe the maximum permissible clearance height

If the vehicle height exceeds the maximum permissible clearance height, the roof and other vehicle parts may be damaged.

► Please observe the indicated maximum clearance height.

► If the vehicle exceeds the permissible clearance height, do not drive in.

► Take the modified vehicle height in the case of roof superstructures or other carrier systems into account.

ⓘ This service is not available in all countries.

DISPLAYING PARKING OPTIONS ON THE MAP

Requirements:

- The Navigation Services service is activated in your Mercedes-Benz user account.
- The parking service is part of the scope of the Navigation Services.

Multimedia system:

Navigation

► Switch on Parking.

The parking options within the vicinity of the current vehicle position are shown.

SELECTING PARKING OPTIONS

NOTE

Vehicle damage due to failure to observe local information and parking conditions

The data is based on the information provided by the respective service providers.

Mercedes-Benz does not guarantee the accuracy of the information provided in relation to the car park or parking area.

► Always observe the local information and conditions.

Requirements:

- The Navigation Services service is activated in your Mercedes-Benz user account.
- The parking service is part of the scope of the Navigation Services.
- Parking is activated (⟶ page 530).

Multimedia system:

Navigation

► Tap on P the map.

or

► In the route overview, select P Parking spaces (⟶ page 507).
► Select the search position and search filter, e.g. Near destination and Multi-storey car parks.

The map shows car parks suited to the selected settings.

► Select a parking option.

THE FOLLOWING INFORMATION IS DISPLAYED (IF AVAILABLE):

- Destination address, distance from current vehicle position and arrival time
- Information on the car park, e.g.
  - Opening times
  - Parking charges
  - Current occupancy
  - Maximum parking time
  - **Maximum access height**

    The maximum access height shown by the parking service does not replace the need for observation of the actual circumstances.
- Available payment options (Mercedes pay, coins, bank notes, cards)
- Details on parking tariffs
- Number of available parking spaces
- Payment method (e.g. at parking meters)
- Services/facilities at the parking option
- Telephone number

► Calculate the route (⟶ page 497).

THE FOLLOWING FUNCTIONS CAN BE USED (IF AVAILABLE):

- Searching for POIs in the vicinity.
- Saving the destination.
- Placing a call at the destination.
- Sharing the destination via the QR code.
- Calling up the web address.
- Showing the destination on the map.

PRIOR BOOKING OF A PARKING SPACE

Requirements:

- The Navigation Services service is activated in your Mercedes-Benz user account.
- The parking service is part of the scope of the Navigation Services.
- You have registered in the Mercedes-Benz Portal with Mercedes pay and the respective contract partners with your payment details for paying for parking.

- Parking is activated (⟶ page 530).

ⓘ This option is not available in all countries.

Multimedia system:

Navigation

- ▶ Select a parking option on the map.
- ▶ If a parking space available to book has been selected, select Book parking space.
- ▶ Select the desired booking period. Take note of the cancellation conditions.

  If the parking space is available for the selected period, the price will be shown.
- ▶ Press OK to confirm.
- ▶ In the booking overview, confirm with Book.
- ▶ If required, enter the Mercedes me ID PIN.

  The parking space will be booked in the background.

  A booking confirmation including a car park ticket will be sent to your registered email address.

MAKING USE OF OR CANCELLING THE BOOKING

- ▶ Start the Mercedes-Benz App on your smartphone.
- ▶ Open Menu.
- ▶ Select My transactions.
- ▶ Select Parking transactions.
- ▶ Select the desired booking.
- ▶ **To make use of the booking:** select Show car park ticket.

or

- ▶ **To cancel the booking:** select Cancel booking.

ⓘ If possible, a parking space booking can be cancelled up to the stated time. If a booking cannot be cancelled, this will already be shown to you during the booking procedure.

PAYING PARKING CHARGES

Requirements:

- The Navigation Services service is activated in your Mercedes-Benz user account.
- The parking service is part of the scope of the Navigation Services.
- You have registered in the Mercedes-Benz Portal with Mercedes pay and the respective contract partners with your payment details for paying for parking.
- Parking is activated (⟶ page 530).

ⓘ This option is not available in all countries.

Multimedia system:

- ▶ Select a parking option on the map.

- If a car park that can be paid for has been selected, scroll down in the parking details.
- Select Payment.

  Once the vehicle has reached a parking position with payment function and the vehicle is switched off, a message appears. Using this message you can pay from the vehicle and start the payment process.

STARTING A PAYMENT PROCEDURE

- Acknowledge the message.
- Please note the maximum parking period displayed and any existing additional limitations. If required, a message will inform you about the necessity of displaying information confirming the online payment for the parking space.

ⓘ You will receive the receipt as a printout from the parking machine after successfully completing the payment process.

- Select Start the payment process.
- If required, enter the Mercedes me PIN.
- Press OK to confirm.

  The successful start of your parking transaction is shown.
- Complete the booking with OK.
- **To cancel a parking transaction:** after receiving the confirmation request, select Cancel.

  Minimum charges may be incurred.

ENDING A PARKING TRANSACTION

- Stop the active transaction via the Mercedes-Benz App.

  You receive a summary of the procedure and the costs.

  If an uncompleted parking transaction is detected for your vehicle as you continue your journey, a message will appear asking whether you would like to end it.
- Acknowledge the message.

  When the parking transaction is stopped successfully, another message appears with the details about your completed parking.

Dashcam

NOTES ON THE DASHCAM

NOTE
Risk of legal consequences due to violation of legal regulations and data protection provisions

You are legally responsible for operation and use of the dashcam functions.

The legal requirements relating to operation and use of the dashcam can vary depending on the country in which the dashcam is operated.

This function is not permitted in all countries.

- Before using the dashcam, read up on the content of the legal regulations, in particular the data protection requirements in the respective country of use.
- Observe the legal regulations, in particular the data protection requirements.

OBSERVE THE FOLLOWING INSTRUCTIONS FOR SAFE OPERATION:

- Only use FAT32 or exFAT formatted USB storage devices.
- Use USB-IF certified USB storage devices.

  USB-IF is a non-profit corporation and stands for USB Implementers Forum. Based on the USB specification, USB-IF certifies, for example, USB versions, corresponding cables and plugs as well as energy supply processes via the USB interface.
- USB storage devices may be damaged if often or permanently overwritten at high speed. Mercedes-Benz recommends a high-quality external SSD drive.

  The abbreviation SSD stands for Solid State Drive.

The file size and therefore the duration of single recording is limited by the limitations of the USB flash drive format. So FAT32 formatted USB flash drives do not allow files larger than 4 GB, for example.
When the file size is reached, the recording stops and you receive a notification.

THE FOLLOWING FUNCTIONS ARE AVAILABLE IN THE GALLERY APP:

- Switching write protection on or off
- Deleting video files

Additional information about the Gallery app (⟶ page 567).

SELECTING A USB DEVICE FOR A VIDEO RECORDING WITH THE DASHCAM

Requirements:

- At least one USB device is connected with the multimedia system (⟶ page 585).

Multimedia system:

→ Apps » Dashcam

▶ Select the USB symbol.

▶ Select the USB device.

When USB devices contain multiple partitions, recorded video files are not always displayed in the recording list.
Mercedes-Benz recommends that you use USB devices with one partition.

STARTING OR STOPPING A LOOP RECORDING WITH THE DASHCAM

Requirements:

- For recording and saving a video file: a USB device is connected with the multimedia system (⟶ page 585).
- The vehicle is switched on.

Multimedia system:

Apps » Dashcam

- If several USB devices are connected with the multimedia system, select a USB device (⟶ page 534).

  If no USB device is selected, a selection is made automatically when recording starts.

- **To select recording mode:** select Loop recording.

  Loop recording continuously records short video files. When the memory is full, recording is continued automatically. In doing so, the oldest video file is written over.

- **To start:** select Start recording.

  The length of the recording is shown. The Do not remove the storage medium during recording. Before removing the storage medium, eject it first. message appears. The video file is stored on the USB device.

- **To end:** select End recording.

ⓘ In some countries, geo-coordinates (longitude and latitude) are shown in the video image.
For technical reasons, the geo-coordinates may show greater inaccuracies.

A MESSAGE MAY APPEAR IN THE FOLLOWING CASES:

- The camera is not functional, the Camera unavailable message appears.

  Have the camera checked in a Mercedes-Benz service centre.
- If the country border indication has been switched on (⟶ page 536).
- If an outdoor recording is started with the camera app during a dashcam recording, the dashcam recording pauses and resumes automatically after the camera recording is finished. A notification to this effect is displayed.

STARTING OR STOPPING INDIVIDUAL RECORDINGS WITH THE DASHCAM

Requirements:

- For recording and saving a video file: a USB device is connected with the multimedia system (⟶ page 585).
- The vehicle is switched on.

Multimedia system:

Apps » Dashcam

- If several USB devices are connected with the multimedia system, select a USB device (⟶ page 534).

  If no USB device is selected, a selection is made automatically when recording starts.

- **To select recording mode:** select Individual recording.

  Individual recording stops recording when the memory limit is reached. An individual recording is automatically protected against being overwritten.

- **To start:** select Start recording.

  The length of the recording is shown. The Do not remove the storage medium during recording. Before removing the storage medium, eject it first. message appears. The video file is stored on the USB device.

- **To end:** select End recording.

ⓘ In some countries, geo-coordinates (longitude and latitude) are shown in the video image.

For technical reasons, the geo-coordinates may show greater inaccuracies.

A MESSAGE MAY APPEAR IN THE FOLLOWING CASES:

- Individual recording: the memory is full or there are only a few minutes recording time available. The video recording stops or will be stopped imminently.
  Change the USB device or delete a video file.
- The camera is not functional, the Camera unavailable message appears.
  Have the camera checked in a Mercedes-Benz service centre.
- If the country border indication has been switched on (⟶ page 536).
- If an outdoor recording is started with the camera app during a dashcam recording, the dashcam recording pauses and resumes automatically after the camera recording is finished. A notification to this effect is displayed.

CONFIGURING DASHCAM SETTINGS

Requirements:

- A USB device is connected with the multimedia system (⟶ page 585).

Multimedia system:

Apps » Dashcam

► Select .

RECEIVING NOTIFICATIONS AFTER PASSING A BORDER CROSSING

► Activate National border alert .
  A message is shown if video is being recorded and the vehicle passes a border.

ⓘ This function is not available in all countries.

STARTING AUTOMATIC VIDEO RECORDING

► Select Automatic loop recording.

► Activate Automatic loop recording.
  When the vehicle is started, video recording starts automatically.

ⓘ This function is not available in all countries.

Telephone

Telephony

NOTES ON TELEPHONY

WARNING
Risk of distraction from operating integrated communication equipment while the vehicle is in motion

If you operate communication equipment integrated in the vehicle when driving, you could be distracted from the traffic situation. This could also cause you to lose control of the vehicle.

- Only operate this equipment when the traffic situation permits.
- If you cannot be sure of this, stop the vehicle whilst paying attention to road and traffic conditions and operate the equipment with the vehicle stationary.

WARNING
Risk of accident from operating mobile communication equipment while the vehicle is in motion

Mobile communication devices distract the driver from the traffic situation. This can also cause the driver to lose control of the vehicle.

- As a driver, only operate mobile communication devices when the vehicle is stationary.
- As a vehicle occupant, use mobile communication devices only in the designated area, e.g. in the rear passenger compartment.

When operating the multimedia system and mobile communication devices in the vehicle, observe the legal regulations of the country in which you are currently travelling.

WARNING
Risk of injury due to objects being stowed incorrectly

If objects in the vehicle interior are stowed incorrectly, they may slide or be thrown around and hit vehicle occupants. In addition, cup holders, open stowage spaces and mobile phone receptacles will not always be able to retain all objects that they contain in the event of an accident.

There is a risk of injury, particularly in the event of sudden braking or a sudden change in direction.

- ► Always stow objects such that they cannot be thrown around in such situations.
- ► Always make sure that objects do not protrude from stowage spaces, luggage nets or stowage nets.
- ► Close the lockable stowage spaces before starting a journey.
- ► Always stow and secure heavy, hard, pointed, sharp-edged, fragile or bulky objects in the boot/load compartment.

OBSERVE THE ADDITIONAL INFORMATION ON STOWING MOBILE COMMUNICATIONS DEVICES CORRECTLY:

- Loading the vehicle (⟶ page 232)

Further information can be obtained from a Mercedes-Benz service centre or at: https://www.mercedes-benz-mobile.com/

TELEPHONE MENU OVERVIEW



1. Bluetooth® device name of the currently connected mobile phone/of the mobile phone
2. Bluetooth® device name of the other currently connected mobile phone/of the mobile phone
3. Signal strength of the mobile phone network
4. Battery status of the connected mobile phone
5. Options
6. Messages
7. Calls up devices
8. Numerical pad
9. Starts contact search

BLUETOOTH® PROFILE OVERVIEW

Bluetooth® profile of the mobile phone	Function
PBAP (**P**hone **B**ook **A**ccess **P**rofile)	Contacts are automatically displayed in the multimedia system
MAP (**M**essage **A**ccess **P**rofile)	Message functions can be used
HFP (**H**ands **F**ree **P**rofile)	Wireless telephony is available

TELEPHONY OPERATING MODES OVERVIEW

DEPENDING ON YOUR EQUIPMENT, THE FOLLOWING TELEPHONY OPERATING MODES ARE AVAILABLE:

- A mobile phone is connected to the multimedia system via Bluetooth® (⟶ page 539).
- Two mobile phones are connected with the multimedia system via Bluetooth® (two phone mode) (⟶ page 540).
  - You can use all the functions of the multimedia system with both mobile phones.

ⓘ Irrespective of this, Bluetooth® audio functionality can by used with any mobile phone (⟶ page 586).

INFORMATION ON TELEPHONY

THE FOLLOWING SITUATIONS CAN LEAD TO THE CALL BEING DISCONNECTED WHILE THE VEHICLE IS IN MOTION:

- There is insufficient network coverage in the area
- You move from one transmission/reception station to another and no communication channels are free
- The SIM card used is not compatible with the network available
- A mobile phone with "Twincard" is logged into the network with the second SIM card at the same time

The multimedia system supports calls in HD Voice® for improved speech quality. A requirement for this is that the mobile phone and the mobile phone network provider of the person you are calling support HD Voice® .

Depending on the quality of the connection, the voice quality may fluctuate.

CONNECTING A MOBILE PHONE

Requirements:

- Bluetooth® is activated on the mobile phone (see the manufacturer's operating instructions).
- Bluetooth® is activated on the multimedia system (⟶ page 477).

Multimedia system:

Phone » Devices » Devices

SEARCHING FOR A MOBILE PHONE

► Select Connect new device.

AUTHORISING A MOBILE PHONE

► Select a mobile phone.

A code is displayed in the multimedia system and on the mobile phone.

► **If the codes match:** confirm the code on the mobile phone.

ⓘ For older mobile phone models, enter a 1 to 16-digit number code on the mobile phone and on the multimedia system for authorisation.

ⓘ Up to 15 mobile phones can be authorised on the multimedia system.
Authorised mobile phones are reconnected automatically.

ⓘ The connected mobile phone can also be used as a Bluetooth® audio device (⟶ page 586).

You can watch an animation on this topic via the following link:

CONNECTING A SECOND MOBILE PHONE (TWO PHONE MODE)

Requirements:

- At least one mobile phone is already connected to the multimedia system via Bluetooth®.

Multimedia system:

Phone » Devices » Devices

- ▶ Select Connect new device.
- ▶ Select the mobile phone.
- ▶ In some cases, if the query appears, confirm the selection of the mobile phone pair with the Device name 1 + Device name 2 option.

  The selected mobile phone is connected to the multimedia system.

INTERCHANGING MOBILE PHONES (TWO PHONE MODE)

Multimedia system:

Phone

Both mobile phones are shown individually in separate tabs.

- ▶ Select the tab with the desired mobile phone.

  Selecting the tab of a specific mobile phone displays the associated telephone contents.

  Selecting the other tab switches the view to the other telephone.

  The submenus in the telephone menu (e.g. contacts, call lists, messages) relate to the currently selected mobile phone with the exception of the telephone settings. In the telephone settings, settings can be made for both mobile phones.

CHANGING THE FUNCTION OF A MOBILE PHONE

Multimedia system:

Phone » Devices » Devices

ACTIVATING A FUNCTION

- ▶ Select a grey symbol in the line of a mobile phone.

  The corresponding function is activated.

DEACTIVATING A FUNCTION

- ▶ **One function is active:** select the coloured symbol in the line of a mobile phone.

  The mobile phone is disconnected from the multimedia system.

- ▶ **Several functions are active:** de-select an active function in the line of one of the mobile phones.

  The corresponding function is deactivated.

REPLACING MOBILE PHONES

Multimedia system:

Phone » Devices » Devices

NO AUTHORISED MOBILE PHONE AVAILABLE:

- ▶ Select Connect new device.
- ▶ Select a mobile phone.
- ▶ **Newly authorised mobile phone:** confirm the numerical code on the mobile phone.

USING IN SINGLE TELEPHONE MODE

- ▶ Select Device name.

  A newly authorised mobile phone is connected in single telephone mode.

  If the mobile phone has already been authorised and connected in single telephone mode, it is connected again in single telephone mode.

If a mobile phone is already authorised and has been connected in two phone mode with another mobile phone, a query may come, whether the mobile phone should in future be operated in single telephone mode or connected with another mobile phone in two phone mode.

► If required, confirm the query about operating mode (single telephone or two phone mode) by confirming the Device name option.

USING IN TWO PHONE MODE

► Select Device name 1 + Device name 2.

A newly authorised mobile phone is connected with the selected mobile phone in two phone mode.

If the mobile phone has already been authorised and connected in single telephone mode, it will be connected in future with the selected mobile phone in two phone mode.

If the mobile phone was previously connected with another mobile phone, this connection is cancelled.

DISCONNECTING OR DELETING A MOBILE PHONE

Multimedia system:

Phone » Devices

DISCONNECTING A MOBILE PHONE

► Select Disconnect.

If applicable, the mobile phone will be automatically reconnected when the vehicle is next started.

DELETING A MOBILE PHONE

► Select Devices.

► Select [•••] in the line of the mobile phone.

► Select Delete device.

The mobile phone is deleted from the system.

SETTING THE RECEPTION AND TRANSMISSION VOLUME

Requirements:

- A mobile phone is connected (⟶ page 539).

Multimedia system:

Phone » Devices » Devices

This function ensures optimal language quality.

ⓘ Please note that the respective mobile phone must be selected for adjustment of the reception and transmission volume.

► Select [•••] in the line of the mobile phone.

► Select Volume.

► Set the reception and transmission volume using Reception volume and Transmission volume.

Further information on the recommended reception and transmission volume: https://www.mercedes-benz-mobile.com/

SETTING THE RINGTONE

Multimedia system:

Phone » Ringtones

► Set the ringtone.

ⓘ If the mobile phone supports the transfer of the ringtone, you will hear the ringtone of the mobile phone instead of that of the vehicle audio system.

STARTING OR STOPPING MOBILE PHONE VOICE RECOGNITION

Requirements

- At least one mobile phone is connected to the multimedia system (⟶ page 539).
- The tab with the mobile phone for which voice recognition should be started is selected (⟶ page 540).

STARTING MOBILE PHONE VOICE RECOGNITION

► Press and hold the button on the multifunction steering wheel for more than one second.

Voice recognition is started for the currently selected mobile phone.

STOPPING MOBILE PHONE VOICE RECOGNITION

► Press the or button on the multifunction steering wheel.

ⓘ If a mobile phone is connected via Smartphone Integration, the voice recognition of this mobile phone is always started or stopped.

NOTE ABOUT CONTACT SUGGESTIONS

The multimedia system can show contact suggestions based on frequently used contacts, outgoing calls and text messages. For this, the Allow contact suggestions option must be switched on (⟶ page 480).

When you open the call list or the message menu, contacts which you can call or write to will be suggested to you. Suggestions will be shown in the Suggestionstab.

ⓘ The multimedia system does not use the content of messages for suggestions.

SELECTING OPTIONS FOR CONTACT SUGGESTIONS

Requirements:

- The Allow contact suggestions option is switched on (⟶ page 480).
- The multimedia system has gathered sufficient data in order to show contact suggestions.

Multimedia system:

Phone

► Select Call list or Contacts.

► Select Suggestions.

► Select in the line of the suggested contact.

THE FOLLOWING OPTION IS AVAILABLE FOR SELECTION:

- Do not suggest now

Calls

TELEPHONE OPERATION

Multimedia system:

Phone

MAKING A CALL BY ENTERING NUMBERS

► Select .

► Enter a number.

► Select .

The call is made.

ACCEPTING A CALL

► Select Accept .

REJECTING A CALL

► Select Reject .

ANSWERING A CALL WITH A MESSAGE

► Select Message.

ENDING A CALL

► Select .

PUTTING A CALL ON IN-CAR OFFICE'S TO-DO LIST

► Select Put call on In-Car Office's to-do list.

ACTIVATING FUNCTIONS DURING A CALL

THE FOLLOWING FUNCTIONS ARE AVAILABLE DURING A CALL:

- End call
- Micro. off
- Keypad (show to send DTMF tones)
- Add call
- Hands-free

  Transfer the call, e.g. to Front, Rear or All seats.
- Private mode

  Transfer the call to the telephone or headphones, for example.

► Select a function.

ⓘ Observe that the functions and symbols can vary depending on the vehicle equipment.

CONDUCTING CALLS WITH SEVERAL PARTICIPANTS

Requirements:

- There is an active call (⟶ page 542).
- Another call is being made.

SWITCHING BETWEEN CALLS

► Select the contact.

The selected call is active. The other call is on hold.

ACTIVATING A CALL ON HOLD

► Select the contact of the call on hold.

CONDUCTING A CONFERENCE CALL

► Select Conference.

The new participant is included in the conference call.

ENDING AN ACTIVE CALL

► Select End call.

ⓘ On some mobile phones, the call on hold is activated as soon as the active call is ended.

ACCEPTING OR REJECTING A WAITING CALL

Requirements:

- There is an active call (⟶ page 542).

If you receive a call while already in a call, a message is displayed.

Depending on the mobile phone and mobile phone network provider you will hear a call waiting signal.

Alternatively, in two phone mode you will hear an acoustic signal when the call goes through to the other (not yet active) mobile phone.

► Select Accept.
The incoming call is active.
If only one mobile phone is connected with the multimedia system, the previous call will be put on hold.
If during a call you accept a call with the other mobile phone when in two phone mode then the existing call is ended.

or

► Select Message.
The incoming call is not accepted.
You answer with a message.

or

► Select Reject.

ⓘ The function and the behaviour depend on your mobile phone network provider as well as on the mobile phone (see the manufacturer's operating instructions).

USING THE INTERNATIONAL DIALLING CODE
Multimedia system:
Phone

► Press and "0" until a "+" appears in the selection field.

► Enter the numbers of the country code, regional code and the telephone number.

► Select .
The call is made.

Contacts

INFORMATION ABOUT THE CONTACTS MENU
The contacts menu contains all contacts from existing data sources, e.g. mobile phone or data storage medium.

DEPENDING ON THE DATA SOURCE, IT IS POSSIBLE TO SAVE/LOAD THE FOLLOWING NUMBER OF CONTACTS:

- Permanently saved contacts: 3,000 entries
- Contacts loaded from the mobile phone: 5,000 entries per mobile phone

FROM THE CONTACTS MENU, YOU CAN PERFORM THE FOLLOWING ACTIONS:

- Make a call, for example call a contact (→ page 546)
- Navigation (→ page 495)
- Compose messages (→ page 548)
- Additional options (→ page 546)

Mobile phone contacts are automatically displayed when a mobile phone is connected to the multimedia system (→ page 539).

DOWNLOADING MOBILE PHONE FAVOURITE CONTACTS
If the mobile phone supports the function, the favourites of the mobile phone are automatically loaded and appear in the overview of the phone menu.

CALLING UP CONTACTS

Multimedia system:

Phone » Contacts

THE FOLLOWING OPTIONS CAN BE USED TO SEARCH FOR CONTACTS:

- Searching by initials
- Searching by name
- Searching by phone number

► Enter characters into the search field.

► Select the contact.

A CONTACT CAN CONTAIN THE FOLLOWING DETAILS:

- Phone numbers
- Navigation addresses
- Internet address
- Email addresses
- Relationship (if set)

MANAGING THE FORMAT OF A CONTACT'S NAME

Multimedia system:

Phone »

► Select Contacts.

► Select Name format.

► Select an option.

OVERVIEW OF IMPORTING CONTACTS

IMPORTING CONTACTS INTO THE CONTACTS MENU

Source	Requirements
USB device	The USB device is connected with the USB port.
Mobile phone	A mobile phone is connected to the multimedia system via Bluetooth®. Contacts are available.

Note that the imported contacts remain in the vehicle and can be accessed at any time regardless of the connected mobile phones.

IMPORTING CONTACTS INTO THE CONTACTS MENU

Multimedia system:

Phone » Contacts » Import contacts

► Select a mobile phone <device name>, from which the contacts should be imported.

► Select an option.

SAVING A MOBILE PHONE CONTACT

Multimedia system:

Phone » Contacts

► Select [>] in the line of the mobile phone contact.

► Select [•••].

► Select Save.

- Select Yes.
  The contact saved in the multimedia system is identified by the MBUX symbol.

CALLING A CONTACT
Multimedia system:
Phone >> Contacts
- Select Search contacts.
- Enter characters into the search field.
- Select the contact.
- Select the telephone number.
  The number is dialled.

SELECTING FURTHER OPTIONS IN THE CONTACTS MENU
Multimedia system:
Phone >> Contacts
- Select in the line of the contact.
- Select •••.
- Select an option.

DELETING CONTACTS

Requirements:

- The contacts are saved in the vehicle.
- To delete an individual contact, this has been imported manually into the vehicle.

Multimedia system:
Phone

DELETING ALL CONTACTS
- Select .
- Select Contacts.
- Select Delete all MBUX contacts.
- Select an option.

DELETING A CONTACT
- Select Contacts.
- Select in the line of the contact.
- Select •••.
- Select Delete contact.
- Select Yes.

Call list

OVERVIEW OF THE CALL LIST
Depending on whether your mobile phone supports the PBAP Bluetooth® profile or not, this can have different effects on the presentation and functions of the call list.

IF THE PBAP BLUETOOTH® PROFILE IS SUPPORTED, THE EFFECTS ARE AS FOLLOWS:

- The call lists from the mobile phone are displayed in the multimedia system.

- When connecting the mobile phone, you may have to confirm the connection for the PBAP Bluetooth® profile.

IF THE PBAP BLUETOOTH® PROFILE IS NOT SUPPORTED, THE EFFECTS ARE AS FOLLOWS:

- The multimedia system generates a call list independently as soon as calls are made in the vehicle.
- The call list is not synchronised with the call lists in the mobile phone.

MAKING A CALL FROM THE CALL LIST

Multimedia system:

→ Home » Phone

▶ Select Call list.

▶ Select an entry.

The call is made.

SELECTING ADDITIONAL OPTIONS IN THE CALL LIST

Multimedia system:

→ Home » Phone

▶ Select Call list.

▶ For contacts that are in the address book: select options.

The contact details are called up.

▶ For contacts where only one number is shown (not in the address book): select .

DELETING THE CALL LIST

Multimedia system:

→ Home » Phone » <Device name> » Settings » Devices

▶ Select Delete call list.

▶ Select Yes.

ⓘ This function is only available if your mobile does not support the PBAP Bluetooth® profile.

Text messages

OVERVIEW OF MESSAGE FUNCTIONS

In the message menu you can receive text messages and create and send them with the help of the MBUX voice assistant.

If the connected mobile phone supports the Bluetooth® MAP profile, the message functions can be used on the multimedia system.

You can obtain further information about settings and supported functions of Bluetooth®-capable mobile phones at a Mercedes-Benz service centre or at: https://www.mercedes-benz-mobile.com/

Some mobile phones require further settings after being connected to the multimedia system to activate the messaging functionality (see manufacturer's operating instructions).

SETTING MESSAGE DISPLAYS

Multimedia system:

→ Home » Phone » <Device name> » Settings » Devices

▶ Select Message display.

► Select On or Off.

READING MESSAGES

Multimedia system:

Phone >> <Device name>

USING THE READ-ALOUD FUNCTION

A message list is shown.

► To read aloud, select the symbol at a conversation.

The message is read aloud.

CREATING AND SENDING A NEW MESSAGE

Requirements

- There is an Internet connection.
- At least one mobile phone with reception is connected.
- If applicable, the message function must be activated on the mobile phone.

Multimedia system:

Phone >> <Device name>

► Using the MBUX voice assistant, speak the voice command Send a message to, and name the desired contact (→ page 444).

DICTATING TEXT

► Say the message.

You are guided by the voice dialogue.

REPLYING TO A MESSAGE IN THE MESSAGING HISTORY

Multimedia system:

Phone >> <Device name>

A message list is shown.

► Select > next to a contact.

The messaging history with this contact is shown. You will be guided through the steps with the help of a voice dialogue.

► Say the message.

FORWARDING MESSAGES

Multimedia system:

Phone >> <Device name>

A message list is shown.

► Speak the voice command Forward message.

You are guided by the voice dialogue.

CALLING A MESSAGE SENDER

Multimedia system:

Phone >> <Device name>

A message list is shown.

► Select > next to a contact.

The messaging history with this contact is shown.

► Select •••.

► Select Call.

USING TELEPHONE NUMBERS, URLS OR EMAIL ADDRESSES FROM A TEXT MESSAGE

Requirements

- An Internet connection is available to call up a URL.

Multimedia system:
Phone >> <Device name> >>
A message list is shown.

- Select > next to a contact.
  The messaging history with this contact is shown.
- Select a telephone number or a URL in the message.
  If a URL is selected the web browser opens.
  IF A TELEPHONE NUMBER IS SELECTED THE FOLLOWING OPTIONS ARE AVAILABLE:
  - Call
  - New message

or

- **If In-Car Office and the email function are available:** select an email address.
  In-Car Office opens.

ⓘ The availability of In-Car Office is country-dependent.

- Select an option.

DELETING A MESSAGE
Multimedia system:
Phone >> <Device name> >>
A message list is shown.

- Select a contact.
- Press and hold on a message.
- **To delete the message:** select Delete.

In-Car Office

IN-CAR OFFICE FUNCTIONS
Using In-Car Office, you can connect your online services to the multimedia system.

THE FOLLOWING FUNCTIONS ARE AVAILABLE:

- Calendar
  Showing appointments and triggering actions, e.g. reading aloud, placing a call, navigating
- E-mail
  Reading, reading aloud, creating, answering and forwarding e-mails
- Tasks and calls
  Managing tasks and pre-booked calls
- Voice input
  Creating appointments/reminders and tasks

ⓘ Alternatively, you can record text contents via the MBUX Voice Assistant or via the dictation function.
Further information on the MBUX Voice Assistant (→ page 445).

ⓘ Please note that certain functions are only available when the vehicle is stationary.

CALLING UP IN-CAR OFFICE

Requirements:

- You have a Mercedes me ID.
- The Digital Extra In-Car Office is activated in your Mercedes me ID.
- You have a user account with an online service, for example Office 365.
  In this way, appointments, e-mails and tasks can be synchronised and facilitated.

Multimedia system:

Apps

- Select In-Car Office.
  Individual functions from In-Car Office can be called up.

LINKING A USER ACCOUNT

- Select the desired online service.
- Scan the QR code.
- Follow the instructions on the device.

SELECTING CALENDAR FUNCTIONS IN IN-CAR OFFICE

Multimedia system:

Apps > In-Car Office > Calendar

- Select an appointment.

THE FOLLOWING FUNCTIONS ARE AVAILABLE:

- Read aloud
- Call
- Navigate
- Delete

- Select a function.

Functions are available if corresponding appointment information is saved.

EXAMPLES OF THIS ARE:

- If a telephone number has been saved for the appointment, Call is available.
- If a navigable address has been saved in the Online Account for the appointment, Navigate is available.

SELECTING FUNCTIONS OF TASKS & CALLS IN "IN-CAR OFFICE"

Multimedia system:

Apps > In-Car Office > Tasks & calls

- Select a function for an entry.

THE FOLLOWING FUNCTIONS ARE AVAILABLE:

- Reading aloud
- Placing a call
  This task function requires a telephone number.
- Marking as completed
  In the current edit, an entry that has been marked as completed can be marked as open again by removing the tick.
- Deleting
- Displaying details

MARKING AN ENTRY AS COMPLETED IN TASKS & CALLS

Multimedia system:

Apps » In-Car Office » Tasks & calls

- Select Tasks & calls.

  An overview appears.

- Select ☑.

READING AND MANAGING E-MAILS

Multimedia system:

Apps » In-Car Office » E-mail

- Select an e-mail.

  The e-mail is opened.

ADDITIONAL FUNCTIONS ARE AVAILABLE:

- Reading e-mails
- Answering e-mails (→ page 551)
- Forwarding e-mails to (→ page 551)
- Deleting e-mails

CREATING NEW E-MAILS

Multimedia system:

Apps » In-Car Office » E-mail

- Select + Create e-mail .
- Select ⊕.
- Enter an e-mail address directly via the keyboard.

or

- Select an e-mail address from the contacts.

ⓘ Contacts can be used from the contacts menu or from linked online services such as Office 365 or Gmail. Further information about the contacts menu (→ page 544).

ⓘ Please note that e-mails can only be written when the vehicle is stationary.

- Enter the subject and text of the e-mail in the corresponding fields with the keypad.
- Select Send.

ANSWERING E-MAILS

Multimedia system:

Apps » In-Car Office » E-mail

- Select an e-mail.
- Select Reply.
- Enter the e-mail text in the corresponding field using the keypad.
- Select Send.

ⓘ Please note that e-mails can only be written when the vehicle is stationary.

FORWARDING E-MAILS

Multimedia system:

Apps » In-Car Office » E-mail

- Select an e-mail.

- Select Forward.
- **To forward with attachment:** select Forward with attachment.

Contacts can be used from the contacts menu or from linked online services such as Office 365 or Gmail. Further information about the contacts menu (⟶ page 544).

Forwarding with an attachment is only possible if an attachment is available.

- **To forward without attachment:** select Forward without attachment.
- Enter the e-mail text in the corresponding field using the keypad.
- Select Send.

OPERATING IN-CAR OFFICE USING THE MBUX VOICE ASSISTANT AND DICTATION FUNCTION

Multimedia system:

Apps » In-Car Office » E-mail

OPERATING IN-CAR OFFICE USING THE DICTATION FUNCTION

The dictation function allows you to dictate text content, such as the subject or text of an e-mail, instead of typing the content using the keyboard.

The dictation function is not available everywhere with the full range of functions. To activate the function for the first time, it may be necessary to accept the Mercedes-Benz Connect terms of use in your Mercedes me ID.

The following is an example of how you can dictate the subject and text of an e-mail.

- Select + Create e-mail .
- Add recipients using ⊕.
- Select .
  The dictation function is started.
- Dictate the subject and text of the e-mail.
  After the voice input has been processed, it is shown as text.
- Select Send.

OPERATING IN-CAR OFFICE USING THE MBUX VOICE ASSISTANT

With the voice control of the MBUX Voice Assistant you can operate various functions of In-Car Office and speak in text contents.

Further information on operating the MBUX Voice Assistant (⟶ page 444).

The following are examples of some voice commands that you can use to operate In-Car Office.

- **To write new e-mail:** say the voice command I want to send an e-mail to John Doe.
  You are guided by the dialogue.
- **To reply to an e-mail:** say the voice command Reply to e-mail.
  You are guided by the dialogue.

- **To forward an e-mail:** say the voice command Forward e-mail.
  Dictate the text of the e-mail.
- **To show tasks:** say the voice command Show my tasks.
  The tasks are shown.
- **To create a calendar entry:** say the voice command Create a calendar entry tomorrow at 9 a.m..
  You are guided by the dialogue.

Apple CarPlay®

OVERVIEW OF APPLE CARPLAY®

WARNING
Risk of distraction from information systems and communications equipment

If you operate information systems and communication devices integrated in the vehicle when driving, you could be distracted from the traffic situation. This could also cause you to lose control of the vehicle.

- Only operate this equipment when the traffic situation permits.
- If you cannot be sure of this, stop the vehicle whilst paying attention to road and traffic conditions and operate the equipment with the vehicle stationary.

You must observe the legal requirements for the country in which you are currently driving when operating the multimedia system.
iPhone® functions can be used via the multimedia system using Apple CarPlay®. They are operated using the touchscreen, Touch Control or Siri® voice control. You can activate voice control by pressing and holding the button on the multifunction steering wheel.

By briefly pressing the button on the multifunction steering wheel you can continue to operate the multimedia system using the MBUX Voice Assistant (→ page 444).

Only one iPhone® at a time can be connected via Apple CarPlay® with the multimedia system.

Also for use of Apple CarPlay® with two phone mode, only one additional mobile phone can be connected using Bluetooth® with the multimedia system.

As access to the iPhone® is restricted by MBUX when an Apple CarPlay® session is active, not all MBUX functions (e.g. dialling from the address book) can be fully provided for the connected device. In this case use Apple CarPlay®.

The full range of functions for Apple CarPlay® is only available with an Internet connection.

The availability of Apple CarPlay® may vary according to the country.

The service provider is responsible for this application and the services and content connected to it.

Apple CarPlay® is a registered trademark of Apple Inc.

You can watch an animation on this topic via the following link:

INFORMATION ON APPLE CARPLAY®

The Apple CarPlay® symbol in the status line switches within Apple CarPlay® to the last active display.

If route guidance is active on the multimedia system, it is closed when route guidance is started on the mobile phone.

CONNECTING AN IPHONE® VIA APPLE CARPLAY® (WIRED)

Requirements:

- The current version of your device's operating system is being used (see the manufacturer's operating instructions).

ⓘ For safety reasons, the first activation of Apple CarPlay® on the multimedia system must be carried out when the vehicle is stationary and the parking brake applied.

► Connect the iPhone® to a USB port on the multimedia system using a suitable cable (⟶ page 585).

When the application is connected for the first time, a message about data protection regulations appears.

► Select Accept & start if the application should be started.

or

► Open the device manager (⟶ page 540).
► Start Apple CarPlay® using the relevant symbol next to the device name.

ⓘ If applicable, a message about data protection regulations appears.

► If required confirm the use of Apple CarPlay® on your iPhone®.

EXITING APPLE CARPLAY®

► Select [⌂].

or

► Press the [⌂] button on the multifunction steering wheel (MBUX multimedia system).

ⓘ If Apple CarPlay® was not displayed in the foreground before disconnecting, the application starts in the background when reconnected. You can call up Apple CarPlay® using the Apple CarPlay® symbol in the status line.

CONNECTING AN IPHONE® VIA APPLE CARPLAY® (WIRELESS)

Requirements:

- The current version of your device's operating system is being used (see the manufacturer's operating instructions).
- Bluetooth® is activated on the device (see the manufacturer's operating instructions).
- The device is "visible" for other devices.

ⓘ For safety reasons, the first activation of Apple CarPlay® on the multimedia system must be carried out when the vehicle is stationary and the parking brake applied.

Multimedia system:

Phone » Devices

- Connect the mobile phone using Bluetooth® (→ page 539).
  When the application is connected for the first time, a message about data protection regulations appears.
- Select OK, start Apple CarPlay if the application should be started.
- If required confirm the use of Apple CarPlay® on your iPhone®.

ⓘ It is possible at any time to switch between a connection via Bluetooth® or Apple CarPlay® (wireless) in the device list.

ⓘ If you have already connected a mobile phone via Bluetooth®, you can connect another iPhone® via Bluetooth® to use Apple CarPlay® via the device manager.

EXITING APPLE CARPLAY®

- Select [⌂].

or

- Press the [⌂] button on the Touch Control (MBUX multimedia system).

ⓘ If Apple CarPlay® was not displayed in the foreground before disconnecting, the application starts in the background when reconnected. You can call up Apple CarPlay® using the Apple CarPlay® symbol in the status line.

CALLING UP APPLE CARPLAY® SOUND SETTINGS

Multimedia system:

[⌂] » Settings » System » Audio

- Select the sound settings.

ENDING APPLE CARPLAY®

- Select the Apple CarPlay® symbol in the device manager (telephone, media) that is next to the device name of the iPhone®.

ⓘ Select the Apple CarPlay® symbol in the device manager in the telephone or media applications if Apple CarPlay® should be restarted.

ⓘ If Apple CarPlay® was not displayed in the foreground before disconnecting, the application starts in the background the next time it is started automatically. You can call up Apple CarPlay® using the relevant symbol in the status line.

Android Auto

ANDROID AUTO OVERVIEW

WARNING
Risk of distraction from information systems and communications equipment

If you operate information systems and communication devices integrated in the vehicle when driving, you could be distracted from the traffic situation. This could also cause you to lose control of the vehicle.

- Only operate this equipment when the traffic situation permits.
- If you cannot be sure of this, stop the vehicle whilst paying attention to road and traffic conditions and operate the equipment with the vehicle stationary.

You must observe the legal requirements for the country in which you are currently driving when operating the multimedia system.
Mobile phone functions can be used with Android Auto using the Android operating system on the multimedia system. They are operated using the touchscreen, Touch Control or voice control. You can activate the voice control system by pressing and holding the button on the multifunction steering wheel.

By briefly pressing the button on the multifunction steering wheel you can continue to operate the multimedia system using the MBUX Voice Assistant (⟶ page 444).

Only one mobile phone at a time can be connected via Android Auto with the multimedia system.

Also for use of Android Auto with two phone mode, only one additional mobile phone can be connected using Bluetooth® with the multimedia system.

The full range of functions for Android Auto is only possible with an Internet connection.

The availability of Android Auto and Android Auto apps may vary according to the country.

The service provider is responsible for this application and the services and content connected to it.

You can watch an animation on this topic via the following link:

INFORMATION ON ANDROID AUTO

The Android Auto symbol in the status line switches within Android Auto to the last active display.

If route guidance is active on the multimedia system, it is closed when route guidance is started on the mobile phone.

CONNECTING A MOBILE PHONE VIA ANDROID AUTO (WIRED)

Requirements:

- The mobile phone supports Android Auto from Android 5.0.
- The current version of the Android Auto app is installed on the mobile phone.
- In order to use the telephone functions, the mobile phone must be connected to the multimedia system via Bluetooth® (⟶ page 539).

  If there was no prior Internet connection, this is established with the use of the mobile phone with Android Auto.

ⓘ For safety reasons, the first activation of Android Auto on the multimedia system must be carried out when the vehicle is stationary with the parking brake.

- ► Connect the mobile phone to a USB port on the multimedia system using a suitable cable (⟶ page 585).
  When the application is connected for the first time, a message about data protection regulations appears.
- ► Select Accept & start if the application should be started.

or

- ► Open the device manager (⟶ page 540).
- ► Start Android Auto using the relevant symbol next to the device name.

EXITING ANDROID AUTO

- ► Select [⌂].

or

- ► Press the [⌂] button on the Touch Control (MBUX multimedia system).

ⓘ If Android Auto was not displayed in the foreground before disconnecting, the application starts in the background when reconnected. You can call up Android Auto using the Android Auto symbol in the status line.

CONNECTING A MOBILE PHONE VIA ANDROID AUTO (WIRELESS)

Requirements:

- The current version of your device's operating system is being used (see the manufacturer's operating instructions).
- The device supports the Android Auto function (wireless).
- Bluetooth® is activated on the device (see the manufacturer's operating instructions).
- The device is "visible" for other devices.
- Bluetooth® is activated on the multimedia system (⟶ page 477)

ⓘ For safety reasons, the first activation of Android Auto on the multimedia system must be carried out when the vehicle is stationary and the parking brake applied.

ⓘ The Android Auto function (wireless) is not available in all countries.

Multimedia system:

⟶ [⌂] ⏩ Phone ⏩ [⚙] ⏩ Devices

- ► Connect the mobile phone using Bluetooth® (⟶ page 539).

ⓘ Depending on the device configuration, the query whether Android Auto should be started may appear after connecting the mobile phone via Bluetooth®. In this case, the query must be answered with Yes.

► Select Start Android Auto.
When the application is connected for the first time, a message about data protection regulations appears.

► Select Accept & start.

ⓘ It is possible at any time to switch between a connection via Bluetooth® or Android Auto (wireless) in the device list.

ⓘ If you have already connected a mobile phone via Bluetooth®, you can connect another mobile phone via Bluetooth® to use Android Auto via the device manager.

EXITING ANDROID AUTO

► Select ⌂.

or

► Press the ⌂ button on the Touch Control (MBUX multimedia system).

ⓘ If Android Auto was not displayed in the foreground before disconnecting, the application starts in the background when reconnected. You can call up Android Auto using the Android Auto symbol in the status line.

CALLING UP THE ANDROID AUTO SOUND SETTINGS

Multimedia system:

⌂ ▸▸ Settings ▸▸ System ▸▸ Audio

► Select the sound settings.

ENDING ANDROID AUTO

► Select the Android Auto symbol in the device manager (telephone, media) that is next to the device name of the mobile phone.

ⓘ Select the Android Auto symbol in the device manager if Android Auto should be restarted.

ⓘ If Android Auto was not displayed in the foreground before disconnecting, the application starts in the background the next time it is started automatically. You can call up Android Auto using the Android Auto symbol in the status line.

Transferred vehicle data with Android Auto and Apple CarPlay®

OVERVIEW OF TRANSFERRED VEHICLE DATA

When using Smartphone Integration, certain vehicle data is transferred to the mobile phone. This enables you to get the best out of selected mobile phone services. Vehicle data is not directly accessible.

THE FOLLOWING SYSTEM INFORMATION IS TRANSMITTED:

- Software release of the multimedia system
- System ID (anonymised)

The transfer of this data is used to optimise communication between the vehicle and the mobile phone.

To do this, and to assign several vehicles to the mobile phone, a vehicle identifier is randomly generated.

This has no connection to the vehicle identification number (VIN) and is deleted when the multimedia system is reset (⟶ page 484).

THE FOLLOWING DRIVING STATUS DATA IS TRANSMITTED:

- Transmission position engaged
- Distinction between parked, standstill, rolling and driving
- Day/night mode of the driver display
- Drive type

The transfer of this data is used to alter how content is displayed to correspond to the driving situation.

THE FOLLOWING POSITION DATA IS TRANSMITTED:

- Coordinates
- Speed
- Compass direction
- Acceleration direction

This data is used by the mobile phone to improve the accuracy of the navigation (e.g. for continuity in a tunnel).

Mercedes-Benz Support Calls

MAKING A CALL VIA THE OVERHEAD CONTROL PANEL

ⓘ Mercedes-Benz Connect calls are not possible in every country. Find out at a Mercedes-Benz service centre if these functions are available in your country.

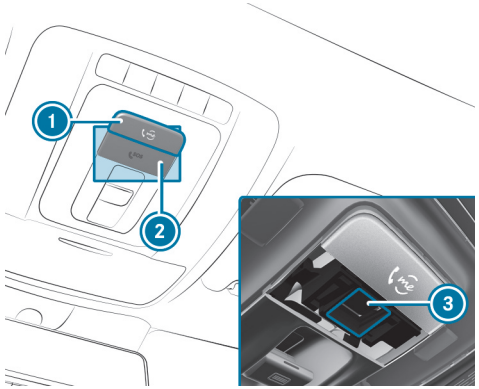

① me button for a Mercedes-Benz Connect call
② SOS button cover
③ SOS button (emergency call system)

Making a Mercedes-Benz Connect call

► Press me button ①.

MAKING AN EMERGENCY CALL

► To open the cover of SOS button ② , press it briefly.

► Press and hold SOS button ③ for at least one second.

If a Mercedes-Benz Connect call is active, an emergency call can still be triggered. This has priority over all other active calls.

INFORMATION ON THE MERCEDES-BENZ SUPPORT CALL VIA THE ME BUTTON

A call was made via the me button to Mercedes-Benz Support via the overhead control panel or the multimedia system (⟶ page 559).

USING THE VOICE DIALOGUE SYSTEM YOU ACCESS THE DESIRED SERVICE:

- Accident and Breakdown Management
- Mercedes-Benz Support for general information about the vehicle

YOU CAN FIND INFORMATION ON THE FOLLOWING TOPICS:

- Activation of Digital Extras
- Operating the vehicle
- Nearest Mercedes-Benz service centre
- Further products from Mercedes-Benz

Data is transferred during the connection to Mercedes-Benz Support (⟶ page 562).

CALLING MERCEDES-BENZ SUPPORT USING THE MULTIMEDIA SYSTEM

Requirements:

- Access to a mobile phone network is available.
- Sufficient network coverage is provided by the mobile phone network providers in the respective region.
- For automatic transmission of vehicle data: the vehicle is switched on.

Multimedia system:

Phone

► Call Mercedes-Benz Support.

- After confirmation, the multimedia system sends the required vehicle data. The data transfer is shown in the display.

► Select a service via the voice dialogue system.

You will be put in touch with a contact person at Mercedes-Benz Support.

THE FOLLOWING SELECTIONS MAY BE AVAILABLE:

- Accident and Breakdown Management
- Workshop service
- Mercedes-Benz Support for general information about the vehicle

ⓘ The availability of the individual selection options is country-dependent.

CALLING MERCEDES-BENZ SUPPORT AFTER AUTOMATIC ACCIDENT/BREAKDOWN DETECTION

Requirements:

The vehicle can detect accident or breakdown situations under certain circumstances.

Accident: no requirements.

Breakdown:

- The vehicle is stationary.
- The hazard warning lights are switched on.

Additional requirements may apply for collision detection with a parked vehicle (⟶ page 346).

ⓘ This function is not available in all countries.

ACCIDENT/BREAKDOWN DETECTION PROCEDURE

- The vehicle has detected an accident or breakdown situation (⟶ page 346).
- In the event an accident or breakdown is detected, the emergency guide shows safety notes in the multimedia system display. This may take a few seconds.

  Depending on the severity of the accident, an automatic emergency call can be initiated. This has priority over all other active calls (⟶ page 570).

► Exit the emergency guide display.

A prompt appears asking whether you would like to receive support from Mercedes-Benz Support.

► **Assistance from Mercedes-Benz Support immediately after the breakdown or accident has been recognised:** select Call.

- The vehicle data is transferred automatically after your consent or if the "Breakdown Management" Digital Extra is activated (⟶ page 564).
- Mercedes-Benz Support will take your call and organise accident/breakdown assistance.

You may be charged for these services.

► **Support from Mercedes-Benz Support at a later time:** select Call later.

The message will disappear and reappear at a later time.

Additional prompt when the "Guard 360" Digital Extra is active: if the "Guard 360" Digital Extra is active, a message may appear in the multimedia system when the vehicle is switched on after a collision is detected, indicating the affected area and the severity of the impact.

► **Support from Mercedes-Benz Support directly after collision detection:** select Call.

► **No support from Mercedes-Benz Support required:** reject the prompt.

ARRANGING A SERVICE APPOINTMENT VIA A MERCEDES-BENZ SUPPORT CALL

If you have activated the Digital Extra Maintenance Management, relevant vehicle data is automatically transferred to Mercedes-Benz Support. You will then receive individual recommendations regarding the maintenance of your vehicle.

Regardless of whether you have consented to the maintenance management service, the multimedia system reminds you after a certain amount of time that a service is due. A prompt appears asking if you would like to make an appointment.

► **To arrange a service appointment:** select Call.

The vehicle data will be transferred after your approval and Mercedes-Benz Support will accept your appointment request. The information is then sent to your desired service outlet.

This will contact you to confirm the appointment and if necessary consult about the details.

ⓘ If you select Call later after the service message appears, the message is hidden and reappears at a later time.

CONSENTING TO DATA TRANSFER FOR A MERCEDES-BENZ SUPPORT CALL

Requirements:

- There is an active Mercedes-Benz Support call via the multimedia system or the me button in the overhead control panel (⟶ page 559).

ⓘ The prompt to confirm data transfer does not appear in all countries.

If the Accident/Breakdown Management Digital Extras are not activated, a prompt appears to confirm the data transfer.

► Select Yes.
  - The relevant vehicle data is sent automatically (⟶ page 562).

or

► Select No and confirm.
  - Only call control data is transmitted (⟶ page 562).

More information on Digital Extras: https://www.mercedes.me

DATA TRANSMITTED DURING A MERCEDES-BENZ SUPPORT CALL

If you initiate a Mercedes-Benz Support call, data is transferred to enable targeted advice and an efficient service.

THE FOLLOWING REQUIREMENTS MUST BE FULFILLED FOR THE TRANSFER OF THE DATA:

- The vehicle is switched on.
- The required data transfer technology is supported by the mobile phone network provider.
- The quality of the mobile connection is sufficient.

MULTI-STAGE TRANSFER DEPENDS ON THE FOLLOWING FACTORS:

- Reason for the initiation of the call
- The available mobile phone transmission technology
- Activated Digital Extras
- The service selected in the voice control system

ⓘ A prompt for consent to data transmission is only made if the corresponding Digital Extra has not been activated.

ⓘ The scope of the data transmitted depends on the vehicle model and vehicle equipment. For technical reasons, not all data is available at all times.

DATA TRANSMISSION WHEN DIGITAL EXTRAS ARE NOT ACTIVATED

IF NO DIGITAL EXTRAS ARE ACTIVATED AND THE DATA PROTECTION PROMPT HAS BEEN CONFIRMED, THE FOLLOWING DATA ARE TRANSMITTED:

- Vehicle identification number
- Time of the call
- Reason for the initiation of the call
- Confirmation of the data protection prompt
- Country indicator of the vehicle
- Set language for the multimedia system

- Telephone number of the communication platform installed in the vehicle

IF A CALL IS MADE FOR A SERVICE APPOINTMENT VIA THE SERVICE REMINDER, THE FOLLOWING DATA IS ALSO TRANSMITTED:

- Current mileage and maintenance data

IF A CALL IS MADE AFTER AUTOMATIC ACCIDENT OR BREAKDOWN DETECTION USING THE MULTIMEDIA SYSTEM, THE FOLLOWING DATA IS ALSO TRANSMITTED:

- Current mileage and maintenance data
- Current vehicle location

IF THE ACCIDENT AND BREAKDOWN MANAGEMENT SELECTION HAS BEEN MADE VIA THE VOICE DIALOGUE SYSTEM AND NO DIGITAL EXTRA HAS BEEN ACTIVATED, BUT THE DATA PROTECTION PROMPT HAS BEEN CONFIRMED, THE FOLLOWING DATA CAN BE ADDITIONALLY REQUESTED FROM THE VEHICLE BY MERCEDES-BENZ SUPPORT:

- Current vehicle location

IF THE DATA PROTECTION PROMPT HAS BEEN REJECTED, THE FOLLOWING DATA IS TRANSMITTED TO ENABLE TARGETED ADVICE AND AN EFFICIENT SERVICE:

- Time of the call
- Reason for the initiation of the call
- Rejection of the data protection prompt
- Country indicator of the vehicle
- Set language for the multimedia system
- Telephone number of the communication platform installed in the vehicle

DATA TRANSMISSION WHEN DIGITAL EXTRAS ARE ACTIVATED
Only in the second step and only for the respective activated Digital Extras, further case-specific data is transmitted in order to enable an optimal service.

An overview of the data transferred is contained in the data protection notes for the Digital Extras. You can find these in your Mercedes me ID.

DATA PROCESSING
The data transmitted as part of the call will be deleted from the transmitting systems once the call has been completed, provided they are not used for other activated Digital Extras.

The incident-specific data is processed and stored by Mercedes-Benz Support and, if required to process the incident, forwarded to the service partner authorised by Mercedes-Benz Support. Please observe the data protection note on the Mercedes-Benz website at https://me.secure.mercedes-benz.com or in the announcement immediately after a call to Mercedes-Benz Support is connected.

ⓘ The recorded message is not available in every country.

Mercedes-Benz Connect

INFORMATION ON MERCEDES-BENZ CONNECT

ⓘ Individual Digital Extras or certain packages are not available in every country. Find out at a Mercedes-Benz service centre if these functions are available in your country.

YOU CAN USE THE FOLLOWING DIGITAL EXTRAS VIA THE MULTIMEDIA SYSTEM AND THE OVERHEAD CONTROL PANEL, FOR EXAMPLE:

- Accident Recovery (me button or the situation-dependent display in the multimedia system)
- Breakdown Management (me button or the situation-dependent display in the multimedia system)
- Mercedes-Benz Emergency Call System (automatic emergency call and SOS button)

The Digital Extras Accident and Breakdown Management and the Mercedes-Benz emergency call system are available to you around the clock.

The me button and the SOS button can be found on the vehicle's overhead control panel (⟶ page 559).

You can also call Mercedes-Benz Support via the multimedia system (⟶ page 560).

Please note that Mercedes-Benz Connect is a Mercedes-Benz service. In an emergency, use the emergency call system in the vehicle (⟶ page 66) or contact the standard national emergency numbers.

Please note the terms of use and the data protection notes for Digital Extras. You can find these in your Mercedes-Benz user account.

ACCIDENT AND BREAKDOWN MANAGEMENT DIGITAL EXTRAS

ⓘ The Accident and Breakdown Management Digital Extras are not available in every country. Contact a Mercedes-Benz service centre to find out whether this function is available in your country.

THE ACCIDENT AND BREAKDOWN MANAGEMENT CAN INCLUDE THE FOLLOWING FUNCTIONS:

- Supplement to the Mercedes-Benz emergency call system (⟶ page 66)

  If necessary, the contact person at the Mercedes-Benz emergency call centre forwards the call to Accident and Breakdown Management. Forwarding the call is however not possible in all countries.
- Breakdown assistance by a technician on location and/or the towing away of the vehicle to the nearest Mercedes-Benz service centre

  You may be charged for these services.
- Addition to the emergency guide after automatic accident or breakdown detection (⟶ page 560)

  In the event of a breakdown or accident, further vehicle data is sent which enables optimal support by Mercedes-Benz Support and the authorised service partner or breakdown assistance.
- Supplement to the Digital Extra Telediagnosis

  With the Telediagnosis function, specific wear and failure reports are recorded by the service provider, in so far as these can be clearly interpreted and are available through the monitoring of components that are subject to diagnostics.

  If your vehicle detects a breakdown or threat of a breakdown, you may be prompted via the multimedia system to contact Mercedes-Benz Support for further help. This prompt in the multimedia system only appears when the vehicle is stationary.

ⓘ These Digital Extras are subject to technical restrictions such as the mobile phone coverage, mobile network quality and the ability of the processing systems to interpret the transferred data. In some circumstances, this can result in delays or the failure of the information to appear in the multimedia system.

Please note that the Mercedes-Benz Support Call is a Mercedes-Benz service. In emergencies, be sure to contact the usual national emergency number first or use the Mercedes-Benz emergency call system (⟶ page 568).

You can find more information on Digital Extras on the Mercedes-Benz Portal: https://me.secure.mercedes-benz.com

DATA TRANSMITTED WITH MERCEDES-BENZ CONNECT

THE DATA TRANSFERRED DURING THE MERCEDES-BENZ SUPPORT CALL DEPENDS ON:

- The reason for initiation of the call
- The service that is selected in the voice control system
- The activated Digital Extras (⟶ page 562)

Which data is transferred for the Digital Extras can be taken from the currently valid terms of use and the data protection notes for Digital Extras. You can find these in your Mercedes me ID.

MB Apps (Digital Extras)

INFORMATION ON MB APPS AND DIGITAL EXTRAS

With a Mercedes me ID, you have access to services and offers from Mercedes-Benz.

Availability is dependent both on the country and equipment.

You can obtain further information at a Mercedes-Benz service centre or in the Mercedes-Benz Portal: https://www.mercedes.me

CALLING UP THE MERCEDES ME ID USER ACCOUNT

Multimedia system:

⟶ ⌂ ⏩ MB Apps ⏩ Mercedes me

YOU HAVE A MERCEDES ME ID AND THE VEHICLE IS LINKED TO THE MERCEDES ME ID

► Select Mercedes me ID.

Information regarding the linked Mercedes me ID user account appears.

YOU DO NOT YET HAVE A MERCEDES ME ID AND THE VEHICLE IS NOT YET LINKED TO THE MERCEDES ME ID

ⓘ If you do not yet have a Mercedes me ID, you can create a Mercedes me ID at: https://www.mercedes.me or in the Mercedes-Benz App. A valid email address or phone number is required for this.

► Select ⌂.

► Select MB Apps.

► Select Mercedes me.

► To link your Mercedes me ID to the vehicle, follow the instructions on the display.

ⓘ If the Mercedes-Benz App is available on a mobile phone, the vehicle link can be made via the displayed QR code.

CALLING UP DIGITAL EXTRAS

Requirements:

- The vehicle is linked to your Mercedes me ID.

Multimedia system:

→ Home ⏩ MB Apps ⏩ Mercedes me

▶ Select My Digital Extras.

The Digital Extras for which you have a valid licence are displayed in alphabetical order.

ORDERING OR RENEWING DIGITAL EXTRAS

To order or extend Digital Extras, use the Mercedes-Benz Store.

▶ Select Home.

▶ Select Store.

REMOVING THE LINK BETWEEN YOUR MERCEDES ME ID AND THE VEHICLE

Requirements:

- The Mercedes me ID that was first linked to the vehicle is registered.
- The user profile is synchronised (⟶ page 467).
- A Mercedes me PIN has been set.

Multimedia system:

→ Home ⏩ MB Apps ⏩ Mercedes me

▶ Select Mercedes me ID.

▶ Select Delete vehicle connection.

ⓘ Only the user whose Mercedes me ID was first linked to the vehicle can delete the link between all users and the vehicle.

SELECTING APPS

Requirements:

- Depending on the app, the general terms and conditions are confirmed.

Multimedia system:

→ Home ⏩ Apps

▶ Select an app.

THE FOLLOWING APPS ARE AVAILABLE, FOR EXAMPLE:

- Weather
- Browser
- Additional apps, which are purchased or installed subsequently

ⓘ You can also access both of the first two apps via the quick access at Apps.

ⓘ The available features are country-dependent.
Licence fees may be applicable.

THE FOLLOWING FUNCTIONS ARE AVAILABLE FOR APPS, FOR EXAMPLE:

- Search function
- Filter function, for displaying search results at the current vehicle position or at the destination

- Display of detailed information
- Read-aloud function
- Setting functions

USING THE GALLERY APP

Multimedia system:

→ Apps

► Select Gallery.

IMAGES AND VIDEO RECORDINGS ARE DISPLAYED FROM THE FOLLOWING SOURCES, FOR EXAMPLE:

- Dashcam video recordings
- Collision detection images
- Video recordings and images from other available sources
- Video recordings from AMG TRACK PACE
- Favourites

► Select a tab.

FILTERING DISPLAYS

► Select .

► Select an option.

All files, all images or all video recordings are displayed.

PLAYING BACK A VIDEO RECORDING

► Select .

Playback starts.

► **To continue playback in full screen mode:** tap on the display.

► **To pause playback:** select .

► **To continue playback from the desired position:** move the position on the timeline by sliding it.

► **To select the previous or next video recording:** swipe to the right or left.

SCROLLING AND ZOOMING IMAGES

► **To scroll:** swipe on the image in one direction.

► **To zoom:** tap twice in quick succession on an image.

► **To select the previous or next image:** swipe to the right or left.

ADDING OR REMOVING A FILE FROM THE FAVOURITES

► Press and hold on a file.

► Select Add to favourites/Remove from favourites.

A corresponding message appears.

SWITCHING WRITE PROTECTION ON OR OFF

ⓘ Active write protection is not supported by every app.

► Press and hold on a file.

► Activate or deactivate Write protection.

DELETING FILES

► Select .

► **To delete a single file:** tap on a file.

will appear.

► **To delete all files:** tap on .

- **To delete:** select [trash].
  A prompt appears.
- Select Yes.

ⓘ A single file can be deleted even after a long press on the file.

Emergency call systems

INFORMATION ON AVAILABLE EMERGENCY CALL SYSTEMS

TWO TYPES OF EMERGENCY CALL SYSTEM ARE AVAILABLE TO YOU IN THE VEHICLE:

- Mercedes-Benz emergency call system
- 112 emergency call system (EU eCall)

The Mercedes-Benz emergency call system is generally available for your vehicle for 10 years ex works.

The Mercedes-Benz Emergency Call System is not available in all countries. You can find out about the regional availability of the Mercedes-Benz emergency call system at: https://www.mercedes-benz-mobile.com/extra/ecall/

THE FOLLOWING APPLIES FOR BOTH EMERGENCY CALL SYSTEMS:

- The transfer of specific data is required for the intended function of both emergency call systems. This will be explained in the "Data transfer" section (⟶ page 571).
- Both emergency call systems are included as standard equipment in your vehicle and are activated at the factory.
- The use of both emergency call systems is exempt from charges.
- Both emergency call systems only function in areas in which the mobile phone network providers offer mobile phone coverage.
  For both systems, insufficient network coverage from the mobile phone network providers can result in an emergency call not being transmitted.

DIFFERENCES BETWEEN THE MERCEDES-BENZ EMERGENCY CALL SYSTEM AND THE 112 EMERGENCY CALL SYSTEM (EU ECALL)

Mercedes-Benz emergency call system	112 emergency call system (EU eCall)
• The Mercedes-Benz emergency call system is permanently logged in to the mobile phone network. • Automatic and manual Mercedes-Benz emergency calls are transmitted to a Mercedes-Benz emergency call centre. In the event that the emergency call centre of the Mercedes-Benz emergency call system cannot be reached (e.g. due to a lack of network coverage), the 112 emergency call is carried out automatically.	• If you decide on the 112 emergency call system (EU eCall) only, then the system only logs in to the mobile phone network after the triggering of a manual or automatic emergency call. • The 112 emergency call system (EU eCall) transmits automatic and manual emergency calls directly to public coordination centres.

The 112 emergency call system (EU eCall) in your vehicle meets the delegated regulation EU 2017/79. Proper and full functionality of the 112 emergency call system (EU eCall) depends on circumstances beyond the influence of Mercedes-Benz AG. This includes mobile network coverage and the technical infrastructure of the public reception centres in the respective countries.

Please observe that in the event of a repair genuine Mercedes-Benz batteries must be used which have been certified pursuant to the delegated regulation EU 2017/79 (Appendix I). Other manufacturers are also permitted provided their batteries are certified according to the delegated regulation EU 2017/79.

There is the option of deactivating the Mercedes-Benz emergency call system and using only the 112 emergency call system (EU eCall). Contact address for carrying out deactivation of the Mercedes-Benz emergency call system are the local dealers.

MERCEDES-BENZ RECOMMENDS THE ACTIVATION OF THE MERCEDES-BENZ EMERGENCY CALL SYSTEM FOR THE FOLLOWING REASONS:

- In emergency situations when abroad, you can also get support in a language you speak.
- Several transmission technologies are used to accelerate the transfer of the accident data and improve reliability of the transmission.
- The Mercedes-Benz emergency call system is permanently logged in to the mobile phone network, which ensures faster placement of the emergency call and faster transfer of the accident data.

  Measures for rescue, recovery or towing away can then be initiated in quickly.
- With a Mercedes-Benz emergency call, the accident data is only transferred to the public coordination centre with the approval of the customer.

  In the event of an automatically triggered emergency call in which there is no voice contact, the accident data is transmitted immediately to the public emergency call centre.
- If the Mercedes-Benz emergency call centre is not available, the 112 emergency call is carried out automatically.

OVERVIEW OF EMERGENCY CALL SYSTEMS

Both the Mercedes-Benz emergency call system as well as the 112 emergency call system (EU eCall) can help to reduce the time between an accident and the arrival of emergency services at the site of the accident. They help locate an accident site in places that are difficult to access.

Both emergency call systems can initiate an emergency call automatically (→ page 570) or manually (→ page 570).

Only make emergency calls if you or others are in need of rescue. Do not make an emergency call in the event of a breakdown or a similar situation.

INDICATORS IN THE DISPLAYS

THE FOLLOWING MESSAGES APPEAR ON THE CENTRAL DISPLAY OR THE MEDIA DISPLAY OF BOTH EMERGENCY CALL SYSTEMS:

- SOS NOT READY: the vehicle is not switched on or the emergency call system is malfunctioning. This does not necessarily indicate complete failure of the emergency call system. Emergency calls can still be transmitted.

  The display only refers to the vehicle and does not take account of the availability of mobile phone networks and the Mercedes-Benz emergency call centre.

  The functional readiness of the emergency call system on the vehicle can be seen when the SOS NOT READY display disappears once the vehicle is switched on.

- SOS: the icon appears in the display during an active emergency call.

ⓘ In case of a malfunction of the emergency call system, the speakers, microphone or airbag, for example, are faulty.
In case of a malfunction of the emergency call system, the speakers, microphone, airbag or the SOS button, for example, are faulty.

YOU CAN RECOGNISE A FAULT IN THE EMERGENCY CALL SYSTEM BY THE FOLLOWING DISPLAYS:

- A corresponding message appears on the driver and media display .

TRIGGERING AN AUTOMATIC EMERGENCY CALL

Requirements:

- The vehicle is switched on.
- The starter battery is sufficiently charged.

AN EMERGENCY CALL IS TRIGGERED AUTOMATICALLY:

- After activation of the restraint systems such as airbags or seat belt tensioners after an accident
- After an automatically initiated emergency stop by Active Emergency Stop Assist

THE EMERGENCY CALL HAS BEEN MADE:

- A voice connection is established with the emergency call centre.
- A message with accident data is transmitted to the emergency call centre.

If no connection can be made to the public emergency services, a corresponding message appears in the display.

► Dial the emergency number 112 or the appropriate local emergency call number on your mobile phone.

IF AN EMERGENCY CALL HAS BEEN INITIATED:

- If the traffic conditions and safety permit, remain in the vehicle until a voice connection is established with the emergency call centre.
- On the basis of the call, the emergency call centre decides whether it is necessary to call rescue teams and/or the police to the accident site.
- If no vehicle occupant answers, an ambulance is sent to the vehicle immediately.

TRIGGERING A MANUAL EMERGENCY CALL

► **To use the SOS button in the overhead control panel:** press the SOS button for at least one second (→ page 559).

or

► **To use voice control:** use the voice commands of the MBUX Voice Assistant (→ page 449).

THE EMERGENCY CALL HAS BEEN MADE:

- A voice connection is established with an emergency call centre.
- If the traffic conditions and safety permit, remain in the vehicle until a voice connection is established with the emergency call centre.
- On the basis of the call, the emergency call centre decides whether it is necessary to call rescue teams and the police to the accident site.

- A message with accident data is transmitted to the emergency call centre.

If no connection can be made to the public emergency services, a corresponding message appears in the display.

► Dial the emergency number 112 or the appropriate local emergency call number on your mobile phone.

EMERGENCY CALL SYSTEM DATA TRANSFER

For both the Mercedes-Benz emergency call system as well as the 112 emergency call system (EU eCall) data is transferred to the Mercedes-Benz emergency call centre or the public emergency services call centre.

Depending on the emergency call system (⟶ page 568) activated different data is transmitted to the appropriate emergency call centre.

TRANSMITTED DATA ACCORDING TO ACTIVATED EMERGENCY CALL SYSTEM:

Mercedes-Benz emergency call	112 emergency call
• Position data of the vehicle	• Position data of the vehicle
• Position data on the route (a few 100 m before the incident)	• Position data on the route (a few 100 m before the incident)
• Direction of travel	• Direction of travel
• Vehicle identification number	• Vehicle identification number
• Drive type of the vehicle (e.g. petrol, diesel, CNG, LPG, electric or hydrogen)	• Drive type of the vehicle (e.g. petrol, diesel, CNG, LPG, electric or hydrogen)
• Number of people detected in the vehicle	• Number of people detected in the vehicle
• Whether the emergency call was initiated manually or automatically	• Whether the emergency call was initiated manually or automatically
• Time of the accident	• Time of the accident
• Language setting on the multimedia system	
• Digital Extras available or not This determines whether the call can be forwarded to Mercedes-Benz Support if required.	

ⓘ If only the 112 emergency call system (EU eCall) is activated in the vehicle, the accident data is transmitted directly to the public emergency call centre.

FOR ACCIDENT CLARIFICATION PURPOSES, THE FOLLOWING MEASURES CAN BE TAKEN UP TO AN HOUR AFTER THE EMERGENCY CALL HAS BEEN INITIATED:

- The current vehicle position can be determined.
- A voice connection to the vehicle occupants can be established.

- Emergency call data can be called up.

ⓘ For Russia: various functions, e.g. receiving traffic information, cannot be performed for up to two hours after sending an emergency call.

SELF-DIAGNOSIS FUNCTION OF THE EMERGENCY CALL SYSTEM
Your vehicle checks the functionality of the emergency call system every time the vehicle is switched on.

During this time, the SOS button lights up red continuously for five seconds.

In the event of a system failure, you will be informed via a text message on the driver display and the red SOS NOT READY indicator on the central display or media display.

Please, make sure, that during 30 seconds after switching vehicle ON the red indicator SOS NOT READY in the upper right corner of display is switched OFF, this means the emergency call system passed diagnostics successfully.

INFORMATION ON DATA PROCESSING

PROCESSING OF PERSONAL DATA VIA THE MERCEDES-BENZ EMERGENCY CALL SYSTEM
All processing of personal data via the Mercedes-Benz emergency call system corresponds with the specifications in the EU Regulation 2016/679 "on the protection of natural entities with regard to the processing of personal data (GDPR)".

The data is solely used by the Mercedes-Benz emergency call system for rescue and recovery in the event of an accident.

The owner of a vehicle, that is equipped with a Mercedes-Benz emergency call system in addition to the 112 emergency call system (EU eCall), has the right to use the 112 emergency call system instead of the Mercedes-Benz emergency call system.

Contact address for carrying out deactivation of the Mercedes-Benz emergency call system are the local dealers.

PROCESSING OF PERSONAL DATA VIA THE 112 EMERGENCY CALL SYSTEM (EU ECALL)
All processing of personal data via the 112 emergency call system (EU eCall) corresponds with the specifications in the EU Regulation 2016/679 "on the protection of natural entities with regard to the processing of personal data (GDPR)" and is based particularly on the necessity of upholding the vital interests of the affected person in accordance with article 6, paragraph1, letter d of the GDPR.

The processing of this type of data is strictly limited to the purpose of operating the emergency calls to the standard European emergency call number 112.

DATA RECIPIENT
The recipients of data that is processed by the 112 emergency call system (EU eCall) are the relevant emergency call inquiry terminals. These are configured by the appropriate authorities of the respective country in which they are located to first accept and subsequently process emergency calls to the standard European emergency call number 112.

ARRANGEMENTS FOR DATA PROCESSING

BOTH EMERGENCY CALL SYSTEMS ARE DESIGNED SO THAT THE FOLLOWING REQUIREMENTS ARE FULFILLED:

- The data contained in the system memory is not accessible outside the system prior to the initiation of an emergency call.
- Both emergency call systems cannot be traced and there is no continuous tracking in normal operation.
- The data in the system's internal memory is automatically and continuously deleted.

- The location data of the vehicle is continuously overwritten in the system's internal memory, so that no more than the last three current locations required for the normal function of the system are available.
- The record of the activity data of both emergency call systems is only kept for as long as is required to fulfil the purpose of handling the emergency call, and under no circumstances for more than 13 hours after the time that an emergency call is initiated.

RIGHTS OF PERSONS AFFECTED BY THE DATA PROCESSING

The person affected by the data processing (the vehicle owner) has the right to access the data and if applicable can demand the correction, deletion or barring of data that affects him or her and that the processing of which does not correspond with the GDPR regulations. Each correction, deletion or barring carried out according to this regulation must be shared with the third party to which the data has been transmitted, provided this does not prove to be infeasible and does not incur disproportionate expenditure.

The person affected by the data processing has the right to complain to the appropriate data protection authority should they be of the opinion that their rights have been infringed by the processing of their personal data.

Responsible contact point for the processing of access rights: Konzernbeauftragter für den Datenschutz, Mercedes-Benz Group AG, HPC E600, D-70546 Stuttgart, Germany

Online and Internet functions

Internet connection

INFORMATION ON CONNECTING TO THE INTERNET

WARNING
Risk of distraction from information systems and communications equipment

If you operate information systems and communication devices integrated in the vehicle when driving, you could be distracted from the traffic situation. This could also cause you to lose control of the vehicle.

- Only operate this equipment when the traffic situation permits.
- If you cannot be sure of this, stop the vehicle whilst paying attention to road and traffic conditions and operate the equipment with the vehicle stationary.

You must observe the legal requirements for the country in which you are currently driving when operating the multimedia system.

WARNING
Risk of accident from operating mobile communication equipment while the vehicle is in motion

Mobile communication devices distract the driver from the traffic situation. This can also cause the driver to lose control of the vehicle.

- As a driver, only operate mobile communication devices when the vehicle is stationary.
- As a vehicle occupant, use mobile communication devices only in the designated area, e.g. in the rear passenger compartment.

You must observe the legal requirements for the country in which you are currently driving when operating mobile communication equipment in the vehicle.

DEPENDING ON THE VEHICLE'S EQUIPMENT AND AVAILABILITY IN THE COUNTRY, YOU CAN ESTABLISH AN INTERNET CONNECTION IN THE FOLLOWING WAYS:

- **Vehicles with a communication module:**
  - Using the communication module including data roaming (⟶ page 575)
  - Using Bluetooth® or Wi-Fi with a data-enabled mobile phone
- **Vehicles without a communication module:**
  - Using Bluetooth® or Wi-Fi with a data-enabled mobile phone

The Internet functions can only be used to a limited degree whilst driving.

SETTING UP AN INTERNET CONNECTION USING THE COMMUNICATION MODULE

Requirements:

- The vehicle is equipped with a permanently installed communication module.
- A Mercedes me ID is available.
- The vehicle is linked to a Mercedes me ID.
- The Entertainment Package is active.
- The Comfort Data Volume Digital Extra is activated.

Multimedia system:

Settings » System » Internet and Bluetooth » Manage Internet access

► Select Data package.

For most Digital Extras, data volume can be obtained when procuring the Digital Extras.

Additional data volume is required to use some functions, e.g. web browser or Wi-Fi hotspot.

If the data volume is reached, availability of the Digital Extras is limited.

Depending on the vehicle equipment, you can obtain an Entertainment Package via the Mercedes-Benz Store. In order to use the data package included, you must conclude your own contract with a mobile phone network provider via the Mercedes-Benz App. This can be terminated at any time and incurs no costs. Without this contract it is not possible to use the Digital Extras included in the previously acquired Entertainment Package. The availability of this option is dependent on the country.

If the data package option is not available or can be upgraded, you can purchase data volume directly from the mobile phone network provider for a fee. The availability of this option is dependent on the country.

ⓘ Visit a Mercedes-Benz service centre to find out whether it is possible to purchase data volume in your country directly from a mobile phone network provider.

ⓘ Alternatively, and if available, you can utilise the tethering function of a mobile phone via Wi-Fi or Bluetooth® to use the web browser or Wi-Fi hotspot.

ⓘ With external Wi-Fi hotspots, which are encrypted via TKIP, online software updates cannot be carried out via the external Wi-Fi hotspot.

DISCONNECTING THE AUTOMATIC INTERNET CONNECTION VIA COMMUNICATION MODULE

Requirements:

- Wi-Fi or Bluetooth® tethering are available in the vehicle.

Multimedia system:

Settings » System » Internet and Bluetooth » Manage Internet access

► Select the ••• settings in the line of Data package.

► **To disconnect the automatic connection:** select the Delete entry option.

The communication module is removed from the list of known hotspots, but can be reconnected manually at any time (⟶ page 575).

The Delete entry option permits the use of purchased data volume to be limited. The system is prevented from automatically establishing a connection to the communication module after this option has been activated.

SETTING UP AN INTERNET CONNECTION VIA WLAN

Requirements:

- The Wi-Fi function is activated on the multimedia system (⟶ page 478).
- The Wi-Fi hotspot function is activated on the mobile phone (see the manufacturer's operating instructions).
- Internet access via Wi-Fi is activated (see the manufacturer's operating instructions).

Multimedia system:

Settings » System » Internet and Bluetooth » Manage Internet access

This function is country-dependent.

The mobile phone is listed in the Internet device manager

► Select the mobile phone with the Wi-Fi symbol.

The mobile phone is not listed in the Internet device manager

► Select Search for access.

► Select the mobile phone with the Wi-Fi symbol.
It may take a few seconds until the device is found by the Wi-Fi search.

► Log in to the Wi-Fi network (⟶ page 478).

THE INTERNET CONNECTION VIA WI-FI IS RESTRICTED OR DOES NOT FUNCTION IN THE FOLLOWING CASES:

- The mobile phone is switched off.
- Mobile data use is deactivated on the mobile phone.
- The Wi-Fi function is deactivated on the multimedia system.
- The Wi-Fi function is deactivated on the mobile phone.
- Internet access via Wi-Fi is deactivated on the mobile phone.

SETTING UP AN INTERNET CONNECTION VIA BLUETOOTH®

Requirements:

- The mobile phone supports the Bluetooth® profile PAN (**P**ersonal **A**rea **N**etwork).
- The mobile phone is connected to the multimedia system via Bluetooth® (⟶ page 539).
- Internet access via Bluetooth® is activated (see the manufacturer's operating instructions).

Multimedia system:

Settings » System » Internet and Bluetooth » Manage Internet access

This function is country-dependent.

The mobile phone is listed in the Internet device manager

- Select the mobile phone with the Bluetooth® symbol.

The mobile phone is not listed in the Internet device manager

- Select Search for access.

  In the list displayed, all mobile phones already known to the multimedia system are shown. New devices can be set up using the phone application.

- Connect the mobile phone using Bluetooth® (⟶ page 539).

ⓘ If a new mobile phone is connected using Bluetooth®, this is also used for the telephone application.

THE INTERNET CONNECTION VIA BLUETOOTH® IS RESTRICTED OR DOES NOT FUNCTION IN THE FOLLOWING CASES:

- The mobile phone is switched off.
- The mobile phone network coverage is insufficient.
- Mobile data use is deactivated on the mobile phone.
- The Bluetooth® function on the multimedia system is switched off and the mobile phone is to be connected via Bluetooth®.
- The Bluetooth® function is switched off on the mobile phone and the mobile phone is to be connected via Bluetooth®.
- Neither the mobile phone network nor the mobile phone allow simultaneous use of a telephone and an Internet connection.
- The mobile phone has not been enabled for Internet access via Bluetooth®.

CANCELLING INTERNET ACCESS PERMISSION FOR A MOBILE PHONE

Multimedia system:

Home » Settings » System » Internet and Bluetooth » Manage Internet access

- Select options ••• next to the name of the mobile phone.
- Select Delete configuration.
- Select Yes.

ESTABLISHING AN INTERNET CONNECTION

Multimedia system:

Home » Apps

- For example, select Browser.

If you select a function that requires an Internet connection and the system is currently offline, a menu opens with a selection of possible Internet accesses as well as all tethering devices that are within range.

- Select an Internet access from the list.

  The Internet connection is established.

ⓘ The list of possible Internet connections can also be displayed using the extended status line.

ⓘ Depending on the vehicle equipment and country availability, you can establish an Internet connection via the communication module or connected mobile phones.

The availability of the web browser depends on the country.

Connection status

CONNECTION STATUS OVERVIEW

DEPENDING ON THE CONNECTION STATUS, THE FOLLOWING SYMBOLS CAN APPEAR ON THE MEDIA DISPLAY IN THE STATUS LINE:

- : a Wi-Fi device is selected as Internet access.
- : a Bluetooth® device is selected as Internet access.
- Mobile communications standard (e.g. 4G + double arrow symbol): the communication module is selected as the hotspot.

DISPLAYING THE CONNECTION STATUS

Multimedia system:

→

► Briefly press the status line.

The extended status line is displayed.

► Briefly press the Internet symbol in the symbol overview.

The current connection status is displayed.

NOTES ON DISPLAYING THE CONNECTION STATUS

- When connecting via Wi-Fi, the connection status and device name are displayed.
- When connecting via a Bluetooth® device, the connection status, device name, and network type are displayed.
- In the case of a connection via the communication module the following status information can be shown:
  - Type of network
  - Status (online, offline, data volumes available or used, limited service)
- For vehicles with a communication module, the connection data of Digital Extras for which the user does not have to pay can be displayed under Digital Extras.

Web browsers

CALLING UP A WEB PAGE

WARNING
Risk of distraction from information systems and communications equipment

If you operate information systems and communication devices integrated in the vehicle when driving, you could be distracted from the traffic situation. This could also cause you to lose control of the vehicle.

► Only operate this equipment when the traffic situation permits.

► If you cannot be sure of this, stop the vehicle whilst paying attention to road and traffic conditions and operate the equipment with the vehicle stationary.

You must observe the legal requirements for the country in which you are currently driving when operating the multimedia system.

Multimedia system:

→ » Apps » Browser

CALLING UP A NEW WEB PAGE

► Select Search.

- Entering a web address.
- Select OK.

The function is country-dependent.

No web pages can be displayed on the multimedia system while driving.

CALLING UP A WEBSITE FROM THE BROWSER HISTORY

- **To call up the previous page from the history:** select [<].

WEB BROWSER OVERVIEW

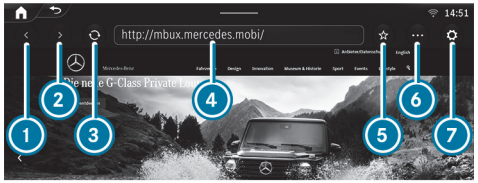

1. Previous website
2. Next website
3. Update
4. URL
5. Adds/removes bookmarks
6. Options
7. Settings

UNDER [•••] YOU HAVE THE FOLLOWING OPTIONS:

- Tabs
- Bookmarks & history
- Reading mode
- Share link
- Share content
- Request mobile website

CALLING UP WEB BROWSER OPTIONS

Multimedia system:

[Home] >> Apps >> [Browser] >> [•••] >> Bookmarks & history

THE FOLLOWING FUNCTIONS ARE AVAILABLE:

- Bookmarks
- Browsing history
- Entered URLs

- Select an option.
- Change the settings.

CALLING UP THE WEB BROWSER SETTINGS

Multimedia system:

[Home] >> Apps >> [Browser] >> [⚙] >> Settings

THE FOLLOWING FUNCTIONS ARE AVAILABLE:

- Block popups
- Enable cookies
- Enable Javascript

- ▶ Switch a function on or off.

DELETING BROWSER DATA

Multimedia system:

Apps >> Browser >> Browser data

THE FOLLOWING SPECIFIC BROWSER DATA CAN BE DELETED:

- Cache
- Cookies
- Form data

- ▶ Select one of the options shown.

MANAGING BOOKMARKS

Multimedia system:

Apps >> Browser >> •••

- ▶ Select Bookmarks & history.
- ▶ Select ••• after the bookmark.

  A menu with options opens.

THE FOLLOWING OPTIONS ARE AVAILABLE:

- Delete entry
- Delete all
- Edit
- Share

- ▶ Select one of the options shown.

MANAGING TABS

Multimedia system:

Apps >> Browser >> ••• >> Tabs

OPENING A NEW TAB

- ▶ Select New tab.

CHANGING TAB

- ▶ Select the icon for the desired tab.

CLOSING A TAB

- ▶ Press and hold the icon of the tab to be closed until a menu appears.
- ▶ Select Close.

  The tab is closed.

PRIVATE MODE

- ▶ Switch private mode on or off.

  If the private mode is switched on, an icon appears in the input line of the web browser.

ⓘ In private mode, neither the history nor cookies are saved. Bookmarks can also be created in private mode.

SHARING URLS FROM THE WEB BROWSER

Requirements:

- To share via QR code: an app for scanning the QR code is installed on the mobile device.

Multimedia system:

Apps Browser

SHARING URLS VIA QR CODE

- Select Share link.
  A QR code appears.
- Scan the displayed QR code with a mobile device.

SHARING URLS WITH ANOTHER DISPLAY

- Select Share content.
- In the menu drag and drop a display to another display.
  The displayed web page opens on the other display.

SETTING THE WEB BROWSER IN THE BACKGROUND

Multimedia system:

Apps Browser

- Press .
  Audio playback continues.

TuneIn Radio

CALLING UP TUNEIN RADIO

Requirements:

- There is a user account at https://www.mercedes.me.
- The vehicle is linked to the Mercedes me user account.
- The TuneIn radio service is activated.
- The data volume is available.
  Depending on the country, data volume may need to be purchased.
- A fast Internet connection for data transmission free of interference.

The functions and services are country-dependent. For more information, consult a Mercedes-Benz service centre.

Multimedia system:

Radio

- Select TuneIn Radio.
  The TuneIn Radio menu appears. The last station set starts playing.

The connection quality depends on the local mobile phone reception.

OVERVIEW OF TUNEIN RADIO

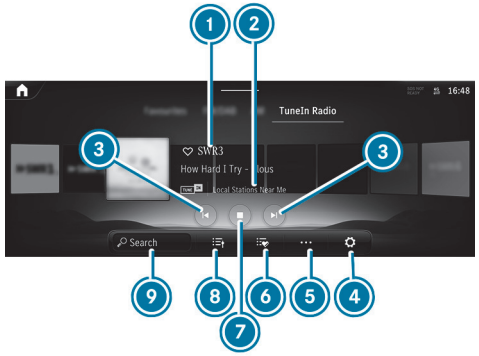

1. Internet Radio provider
2. Additional information on the currently selected station
3. Previous or next station

4 Settings
5 Additional options
6 Favourites
7 Controls playback
8 Station list
9 Search

SELECTING AND CONNECTING TO TUNEIN RADIO STATIONS

Multimedia system:

Radio » TuneIn Radio

- ► Select .
- ► Select a category.
- ► Select a station.
  The connection is established automatically.

or

- ► Select the search field.
- ► Enter a station name.

ⓘ A relatively large volume of data can be transmitted when using Internet Radio.

SAVING/DELETING A TUNEIN RADIO STATION AS A FAVOURITE

Multimedia system:

Radio » TuneIn Radio

SAVING FAVOURITES

- ► Select a station.
- ► Press the symbol next to the station name.

DELETING FAVOURITES

- ► Select a station.
- ► Press the symbol next to the station name.

SETTING INTERNET RADIO OPTIONS

Multimedia system:

Radio » TuneIn Radio » » TuneIn

THE FOLLOWING OPTIONS ARE AVAILABLE:

- Select Stream: select the stream quality
- Login to TuneIn Account: log in to your TuneIn user account
- Log Out of Account: log out of your TuneIn user account

- ► Select an option.

Media

Information about media mode

INFORMATION ABOUT SUPPORTED FORMATS AND DATA STORAGE MEDIA

WARNING
Risk of distraction when handling data storage media

If you handle a data storage medium while driving, your attention is diverted from the traffic conditions. This could also cause you to lose control of the vehicle.

► Only handle a data storage medium when the vehicle is stationary.

SUPPORTED FORMATS AND DATA STORAGE MEDIA:

Permissible filing systems	FAT32, exFAT, NTFS
Permissible data storage media	USB devices, iPod®/iPhone®, MTP devices, Bluetooth® audio devices
Supported audio formats	MP3, WMA, AAC, WAV, FLAC, ALAC
Supported video formats	MPEG, AVI, MKV, MP4, M4V, WMV

OBSERVE THE FOLLOWING NOTES:

- The multimedia system supports a total of up to 50,000 files.
- Data storage media up to 2 TB are supported (32-bit address space).
- Due to the large variety of available music and video files regarding encoders, sampling frequency and data transfer rates, playback cannot be guaranteed.
- Due to the wide range of USB devices available on the market, playback cannot be guaranteed for all USB devices.
- Videos up to FullHD (1920x1080) are supported.
- Copy-protected music and video files or DRM (Digital Rights Management) encrypted files cannot be played back.
- MP3 players must support Media Transfer Protocol (MTP).
- Files with the corresponding format can be played back from the USB device in Dolby Atmos.

INFORMATION ON COPYRIGHT PROTECTION AND TRADEMARKS

Audio files which you create yourself (e.g. copies of data storage media you make yourself) are generally subject to copyright protection. In many countries, reproductions are not permitted without the prior consent of the copyright holder, even for private use. Make sure that you know about the applicable copyright regulations and that you comply with these.

Manufactured under licence from Dolby Laboratories. Dolby and the double-D symbol are registered trademarks of Dolby Laboratories Licensing Corporation. Confidential unpublished works. Copyright 2020-2022 Dolby Laboratories. All Rights Reserved.

Manufactured under licence from Dolby Laboratories. Dolby, Dolby Audio and the double-D symbol are trademarks of Dolby Laboratories.

For DTS Patents, see https://patents.dts.com. Manufactured under licence from DTS Licensing Limited. DTS, the Symbol, & DTS and the Symbol together are registered trademarks, and DTS TruVolume is a trademark of DTS, Inc.©. DTS, Inc. All Rights Reserved.

DTS® Connected Radio™

For DTS Patents, see http://patents.dts.com. Manufactured under licence from DTS Licensing Limited. DTS, DTS Connected Radio, and the DTS logo are registered trademarks or trademarks of DTS, Inc. in the United States and other countries. © 2020 DTS, Inc. ALL RIGHTS RESERVED. Lyrics licensed and provided by Lyric Find™. Content licensed and sourced from Radioplayer™.

Gracenote, the Gracenote logo and logotype, "Powered by Gracenote", MusicID and Playlist Plus are either registered trademarks or trademarks of Gracenote, Inc. in the United States and/or other countries.

This product incorporates Spotify software which is subject to 3rd party licences found here: https://www.spotify.com/connect/third-party-licenses

TIDAL

TIDAL and TIDAL logo are registered trademark of Aspiro AB in the European Union and other countries.

Overview of the media menu

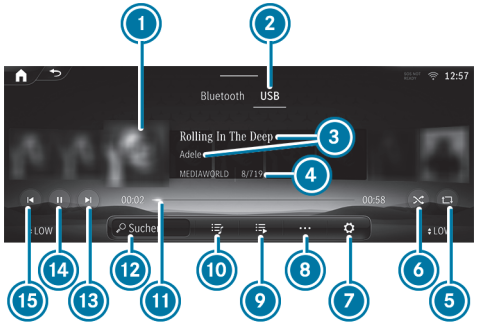

1. Album cover
2. Active media source
3. Track and artist
4. Active data storage medium and current track number/track in playback list
5. Repeat
6. Random playback
7. Settings
8. Additional options
9. Additional categories
10. Playlists and categories
11. Timeline
12. Media search
13. Next track or fast forward
14. Controls playback
15. Previous track or fast rewind

Connecting the data storage medium to the multimedia system

CONNECTING USB DEVICES

NOTE
Damage caused by high temperatures

High temperatures can damage USB devices.

- ► Remove the USB device after use and take it out of the vehicle.

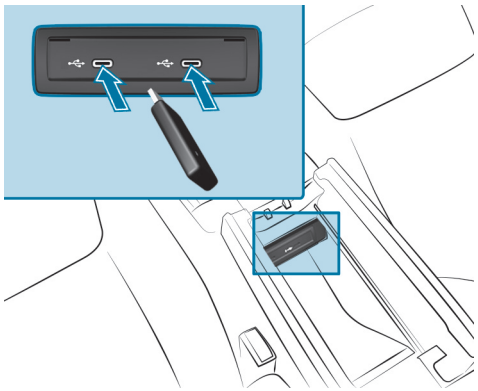

A multimedia connection unit is found in the stowage compartment under the armrest and has two type C USB ports. Depending on the vehicle's equipment, additional USB ports can be found in the storage compartment of the centre console.

► Connect the USB device to the USB port.

SEARCHING FOR AND AUTHORISING A BLUETOOTH® AUDIO DEVICE

Requirements:

- Bluetooth® is activated on the multimedia system and audio device.
- The audio device supports the Bluetooth® audio profiles A2DP and AVRCP.
- The audio device is "visible" for other devices.

Multimedia system:

→ ⌂ » Media » Bluetooth

AUTHORISING A NEW BLUETOOTH® AUDIO DEVICE

► Select Connect device.

Detected equipment is displayed in the device list.

► Select an audio device.

Authorisation starts. A code is displayed on the multimedia system and on the mobile phone.

► If the codes are identical, confirm on the audio device.

► Select No, only music.

The Bluetooth® audio device is connected with the multimedia system.

CONNECTING A PREVIOUSLY AUTHORISED BLUETOOTH® AUDIO DEVICE

► Select a Bluetooth® audio device from the list.

The connection is being established.

Starting media playback

Requirements:

- A data storage medium is connected to the multimedia system.

Multimedia system:

→ ⌂ » Media

► Select a media source.

Controlling media playback

Multimedia system:

→ ⌂ » Media

► **To pause playback:** select ⏸.

► **To continue playback:** select ⏵.

- **To repeat a track:** select [repeat].
  FOR THE REPEAT FUNCTION THERE ARE THE FOLLOWING SETTINGS:
  - **Select once:** the active playlist is repeated.
  - **Select twice:** the current track is repeated.
  - **Select three times:** the repeat function is deactivated.
- **To play back tracks in random order:** select [shuffle].
- **To rewind or fast-forward a track:** tap on the desired point on the timeline.
- **To select the next track:** select [⏭].
- **To select the previous track:** select [⏮].
- **To scroll through tracks quickly:** press and hold [⏮] or [⏭].
- **To show the current track list:** select [track list].

Additional options for setting media playback

Multimedia system:

→ [home] » Media

CALLING UP ADDITIONAL OPTIONS

- Select [•••].
  The additional options are shown.
- Select an option.

Media search

NOTES ABOUT THE SEARCH FUNCTION IN CATEGORIES

Under [track list] you can search through all available media files. There are several categories available for selection. The categories shown depend on the connected device and data format.

ⓘ The categories are available as soon as the entire media content has been read in and analysed.
Availability of the media search with Android devices may be limited.

STARTING A SEARCH IN CATEGORIES

Multimedia system:

→ [home] » Media » [track list]

- Select a category.

USING THE KEYWORD SEARCH

Multimedia system:

→ [home] » Media

You can look for content using the keyword search with free text input.

- Select [search].
  A keyboard for character entry appears.
- Enter the term searched for.

ⓘ The search begins with the first character entered. The more characters entered the more concrete the search results become.

- Select the desired entry from the result list.
  If a list with several tracks is selected, then this is opened in the search.
  To playback all of the tracks in the list, select [•••] and then Play now.

Music online

REQUIREMENTS

- There is an account for the music streaming service.
- A subscription for the music streaming service has been obtained.
- The data volume is available.
  Depending on the country, data volume may need to be purchased.
- A fast Internet connection for data transmission free of interference.

ⓘ The functions and services are country-dependent. For more information, consult a Mercedes-Benz Service Centre.

Multimedia system:

→ [⌂] ▶▶ Media

ADDING A STREAMING PROVIDER THE FIRST TIME YOU START THE APPLICATION

- Select Online music.
  The overview of all supported streaming providers appears.
- Select a streaming provider.
  A QR code is shown on the display.
- Scan the QR code with the mobile phone.
- Confirm the connection request on the mobile phone.

ADDING MORE STREAMING PROVIDERS

- Select Online music.
  The last active streaming provider is active.
- Select [⚙].
- Select Music services.
  The overview of all supported streaming providers appears.
- Select a streaming provider.
  A QR code is shown on the display.
- Scan the QR code with the mobile phone.
- Confirm the connection request on the mobile phone.

LOGGING OUT FROM A STREAMING PROVIDER

- Select Online music.
  The last active streaming provider is active.
- Select [⚙].
- Select Music services.
  The overview of all supported streaming providers appears.
- Tap on Log out.

CALLING UP MUSIC ONLINE

Multimedia system:

→ [⌂] ▶▶ Media

- Select Online music.

Music playback can be controlled with the Touch Control or by using the media application.

SEARCHING FOR MUSIC IN ONLINE MUSIC

Multimedia system:

Media » Online music

SEARCHING FOR CATEGORIES IN ONLINE MUSIC

The media content of the streaming provider can be scanned through in the category search. The available categories and the symbol for the category search depend on the streaming provider.

- Start the category search.
  The list of available categories appears.
- Select a category.

KEYWORD SEARCH IN ONLINE MUSIC

You can look for content using the keyword search with free text input.

- Select [search].
  A keyboard for character entry appears.
- Enter the term searched for.

ⓘ The more characters entered when using the keyword search, the more concrete the search results are.

- Select the desired entry from the result list.
  Depending on the selected hit, playback is started or a lower level in the search is opened.

CALLING UP ONLINE MUSIC SETTINGS

Multimedia system:

Media » Online music

- Select [settings].
- Select Music services.
- Select [settings] next to a streaming provider.
- Select a setting.

INFORMATION ABOUT DOLBY ATMOS®

The MBUX multimedia system enables playback of Dolby Atmos® content via the Burmester® sound system, thereby providing an even more immersive three-dimensional sound experience.

ⓘ The function is available with Amazon Music® or Apple Music® or by using a USB device with the corresponding file formats.

ⓘ Availability of this function depends on the respective equipment.

SWITCHING DOLBY ATMOS® ON OR OFF

Requirements:

- An account for the Amazon Music® or Apple Music® music streaming service is available.
- A subscription to the Amazon Music® or Apple Music® music streaming service has been obtained.
- Sufficient data volume is available.
  Depending on the country, data volume may need to be purchased.

- A fast Internet connection for data transmission free of interference.

The functions and services are country-dependent. For more information, consult a Mercedes-Benz Service Centre.

Multimedia system:

→ Media

► Select Online music.
The overview of all supported streaming providers appears.

► Select Amazon Music® or Apple Music®.

► Select .

► Tap to switch on Dolby Atmos®.

or

► Tap to switch off Dolby Atmos®.
Tracks which are present or available in Dolby Atmos® will be played accordingly in this format by the sound system.

MBUX SOUND DRIVE

INFORMATION ON MBUX SOUND DRIVE

MBUX SOUND DRIVE allows you to experience your favourite song in a new interactive way. You can use various driving conditions to influence elements, e.g. instruments or voices in real time, and recreate them while driving. Different elements of your favourite song are thus built up and broken down again through the experience of different driving situations.

THE FOLLOWING DRIVING CONDITIONS ALLOW YOU TO BECOME PART OF THE MUSIC (EXAMPLES):

- Accelerating
- Braking
- Steering

YOUR FAVOURITE SONG CAN BE EXPANDED WITH THE FOLLOWING LAYERS (EXAMPLES):

- Bass
- Melody
- Certain instruments

Availability of this function depends on the respective equipment.

OPERATING THE MBUX SOUND DRIVE

Requirements:

- You have a Mercedes me ID.
- The vehicle is linked to the Mercedes me ID.
- The Digital Extra is available and has been activated.
- There is an Internet connection.
- The track is available.

Multimedia system:

Media Sound Drive

CONTROLLING PLAYBACK

- Tap on ▶ to start playback.

  Playback starts.

or

- Tap on ■ to stop playback.

  Playback stops.

SWITCHING RANDOM PLAYBACK ON OR OFF

- Tap on to switch on random playback.

  Random playback starts.

or

- Tap again on to switch off random playback.

  Random playback stops.

CALLS UP THE SETTINGS

- Tap on to access the settings.
- Select a setting.

CALLING UP A PLAYLIST

- Tap on to search the available content.
- Select a track.

SEARCHING FOR A TRACK

- Tap on to search for a track.

Radio

Switching on the radio

Multimedia system:

Radio

- Start the application on the multimedia system home screen.

  The radio menu appears. You will hear the last station played on the last frequency band selected.

Radio overview

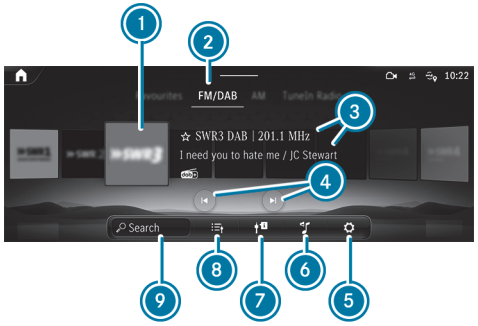

1. Preview image
2. Active frequency band
3. Station name, set frequency and additional information on the station
4. Previous or next station
5. Settings
6. Sound settings
7. Switches on traffic reports
8. Station list
9. Search

Setting the frequency band

Multimedia system:

Radio

- Select a frequency band or a favourite in the selection above the preview image.

Selecting a radio station

Multimedia system:

Radio

- Swipe to the left or right on the control element or select a radio station.

Calling up the radio station list

Multimedia system:

Radio

- Select .
  The station list appears.
- Swipe the station list up or down.
- Select a station.

Searching for radio stations using station names or frequency entry

Multimedia system:

Radio

- Select .
- Enter a station name or frequency.
- Select a station.

Selecting a recommended radio station

Requirements:

- The multimedia system has gathered sufficient data in order to show station suggestions.

Multimedia system:

Radio

- Select .
  The recommended stations are shown.
- Select a suggested station.
  The selected station is played.

Storing radio stations

Multimedia system:

Radio

- Select a radio station.
- Select .

Managing favourites

Multimedia system:

Radio Favourites

MOVING STATIONS

- Press .
  The list of favourites appears.
- Press to the far right of the station name.
- Select Move.
- Move the station to the new position.

Setting station tracking via Internet radio

Requirements:

- A fast Internet connection for data transmission free of interference.

Multimedia system:

→ Radio

- ▶ Select .
- ▶ Select Internet radio.
- ▶ Activate or deactivate the Service Following function.

  When the function is on, the station is searched for via Internet Radio.

  If you are driving out of the station's coverage area and the station is available via Internet radio, the Poor reception. Tap here to switch to Internet radio. message appears on the central display.

Calling up a slide show (FM/DAB radio mode)

Multimedia system:

→ Radio

The slide show displays additional information provided by the station as an image. This can include logos, album covers, music tracks, programmes, news or service information, for example.

ⓘ The slide show is available for DAB+ channels that broadcast additional information.

- ▶ Press the station picture on the central display.

  The image is enlarged.

Switching a slideshow on or off (FM/DAB radio mode)

Multimedia system:

→ Radio

- ▶ Switch DAB Slideshow or Expanded Radio Slideshow on or off .

  When both slideshows are switched on, the contents of both slideshows alternate.

Activating/deactivating the frequency fix function

Multimedia system:

→ Radio » Active frequency band

- ▶ Activate or deactivate Frequency fix.

  If the function is activated, the set frequency is kept even if the reception is poor.

Activating/deactivating traffic announcements

Multimedia system:

Radio

- Select Radio announcements.

  The traffic information service is switched on or off.

Activating/deactivating radio announcements

Multimedia system:

Radio

- Switch on Radio announcements.

  The selected radio announcements are played.

  When Radio announcements are first switched on, Traffic information service (TA), Travel and Warning are preset.

or

- Switch off Radio announcements.

  No radio announcements are played.

Selecting radio announcements

Multimedia system:

Radio Radio announcements

- Switch an announcement on or off.

  For example, Traffic information service (TA), Travel or Warning can be selected.

The radio announcements are not station-dependent.

Setting the traffic information service volume increase

Multimedia system:

Settings System Audio

- Select Navigation & traffic announcements.
- Set a value for Traffic announc. vol. increase.

  Increasing the volume of the traffic information service increases the volume of traffic announcements.

Displaying radio text

Multimedia system:

Radio Active frequency band

- Activate or deactivate Radio text information.

Sound

Sound settings

INFORMATION ABOUT THE SOUND SYSTEM
The sound system has a total output of 100 W and is equipped with six speakers. It is available for all functions in the radio and media modes.

ⓘ The call can also be made from other audio sources. Replace Media with, for example, Radio in the menu path.

CALLING UP THE SOUND MENU
Multimedia system:
→ Media »
- ▶ Select one of the functions shown to make settings.

ADJUSTING TREBLE, MID-RANGE AND BASS SETTINGS
Multimedia system:
→ Media »
- ▶ Set Treble, Mid or Bass.

SWITCHING LOUDNESS NORMALISATION ON OR OFF
Multimedia system:
→ Media » Loudness normalisation

The function compensates for differing loudness when changing between audio sources and within an audio source. Several levels are available for this purpose. The currently set level is displayed.

Loudness normalisation can also be switched off.

- ▶ Switch on one level.

or

- ▶ Switch off loudness normalisation.

SETTING THE BALANCE AND FADER
Multimedia system:
→ Media » Balance and Fader

ADJUSTING THE BALANCE
- ▶ In the grid shown, move the volume distribution between the right and left speakers in the vehicle.

  The volume is distributed between the right and left-hand speakers.

ADJUSTING THE FADER
- ▶ In the grid shown, move the volume distribution between the front and rear speakers in the vehicle.

  The volume is distributed between the front and rear speakers.

SWITCHING THE GREETING TONE ON/OFF
Multimedia system:
→ Settings » System » Audio

SWITCHING ON THE GREETING TONE
If the Greeting tone is switched on and you enter the vehicle, the vehicle will welcome you with a corresponding sound.

- ▶ Tap on ⊶ in order to switch on the Greeting tone.

SWITCHING OFF THE GREETING TONE

- Tap on  in order to switch off the Greeting tone.

Burmester® surround sound system

INFORMATION ABOUT THE BURMESTER® SURROUND SOUND SYSTEM

The Burmester® surround sound system is equipped with 12 loudspeakers. It is available for all functions in the radio and media modes.

ⓘ The call can also be made from other audio sources. Replace Media with, for example, Radio in the menu path.

CALLING UP THE SOUND MENU IN THE BURMESTER® SURROUND SOUND SYSTEM

Multimedia system:

 Media

- Select one of the functions shown to make settings.

ADJUSTING THE TREBLE, MID AND BASS SETTINGS ON THE BURMESTER® SURROUND SOUND SYSTEM

Multimedia system:

 Media Equaliser

- Set Treble, Mid or Bass.

SWITCHING LOUDNESS NORMALISATION IN THE BURMESTER® SURROUND SOUND SYSTEM ON OR OFF

Multimedia system:

 Media Equaliser Loudness normalisation

The function compensates for differing loudness when changing between audio sources and within an audio source. Several levels are available for this purpose. The currently set level is displayed.

Loudness normalisation can also be switched off.

- Switch on one level.

or

- Switch off loudness normalisation.

ADJUSTING THE BALANCE AND FADER IN THE BURMESTER® SURROUND SOUND SYSTEM

Multimedia system:

 Media Balance and Fader

ADJUSTING THE BALANCE

- Move the volume distribution between the right and left sides of the vehicle in the grid shown.

  The volume is distributed between the speakers on the left and right sides in the vehicle.

ADJUSTING THE FADER

- Move the volume distribution between the front and rear of the vehicle in the grid shown.

  The volume is distributed between the speakers in the front and rear of the vehicle.

ⓘ Setting 0 is recommended for high quality music and voice reproduction.

SETTING THE BALANCE AND FADER

- Move the volume distribution between the right and left side of the vehicle and the front and rear of the vehicle in the grid shown.

  The volume is distributed between the left and right and front and rear loudspeakers in the vehicle.

SELECTING A SOUND PROFILE IN THE BURMESTER® SURROUND SOUND SYSTEM

Multimedia system:

Media

SETTING AN EXISTING SOUND PROFILE

- Select a sound profile.

SETTING UP A PERSONAL SOUND PROFILE

- Select Personal sound profile and .
- Select Reconfigure.
- Restart the set-up assistant.

SETTING UP A PERSONAL SOUND PROFILE FOR THE FIRST TIME:

- Select Personal sound profile.
- Open the set-up assistant with Start.
- Observe the messages on the display and select the preferred settings.

  The personal sound profile is created with the selected settings and can be selected in the Sound profiles menu.

CHANGING INDIVIDUAL SETTINGS OF THE PERSONAL SOUND PROFILE AT A LATER DATE:

- Select Personal sound profile and .
- Adjust the desired settings.

ⓘ The availability of a Personal sound profile is dependent on the equipment.
The set-up assistant is available when the vehicle is stationary.

ADJUSTING SOUND FOCUS IN THE BURMESTER® SURROUND SOUND SYSTEM

Multimedia system:

Media Sound focus

- Select a seat or seat row for sound focus.

  Sound focus is activated.

or

- Select the seat or seat row again.

  Sound focus is deactivated.

Advanced sound system

INFORMATION ABOUT THE ADVANCED SOUND SYSTEM

The Advanced Sound System is equipped with ten speakers. It is available for all functions in the radio and media modes.

ⓘ The call can also be made from other audio sources. Replace Media with, for example, Radio in the menu path.

CALLING UP THE SOUND MENU IN THE ADVANCED SOUND SYSTEM

Multimedia system:

Media

ADJUSTING SOUND SETTINGS

- Select one of the functions shown.

ADJUSTING TREBLE, MID-RANGE AND BASS SETTINGS IN THE ADVANCED SOUND SYSTEM

Multimedia system:

Media

- Set Treble, Mid or Bass.

SWITCHING LOUDNESS NORMALISATION IN THE ADVANCED SOUND SYSTEM ON OR OFF

Multimedia system:

Media Equaliser Loudness normalisation

SWITCHING OFF LOUDNESS NORMALISATION

- Switch on one level.

or

- Switch off loudness normalisation.

SETTING THE BALANCE/FADER IN THE ADVANCED SOUND SYSTEM

Multimedia system:

Media Balance and Fader

ADJUSTING THE BALANCE

- Move the volume distribution between the right and left sides of the vehicle in the grid shown.

  The volume is distributed between the speakers on the left and right sides in the vehicle.

ADJUSTING THE FADER

- Move the volume distribution between the front and rear of the vehicle in the grid shown.

  The volume is distributed between the speakers in the front and rear of the vehicle.

Sound Experience

INFORMATION ABOUT SOUND EXPERIENCE

Your journey will be an acoustic experience. For this purpose, the active Sound Experience accompanies certain situations in the vehicle with selected sounds.

IN THE VEHICLE INTERIOR, FOR EXAMPLE, THE FOLLOWING SITUATIONS ARE ACCOMPANIED BY SELECTED SOUNDS:

- Arrival in the vehicle
- Starting the drive system
- Vehicle acceleration
- Recovery of energy from the braking procedure
- Exiting the vehicle

IN THE EXTERIOR AREA, FOR EXAMPLE, THE FOLLOWING SITUATIONS ARE ACCOMPANIED BY SELECTED SOUNDS:

- Locking and unlocking your vehicle
- Plugging in and unplugging the vehicle plug

  The sound when disconnecting the vehicle plug varies with the state of charge of your vehicle.
- Unlocking the vehicle plug
- Successful initiation of the charging process
- Malfunction when charging

In addition, your vehicle welcomes you with an ambient sound outside when the vehicle is stationary and unlocked.

The availability of the exterior area sounds is dependent on the country.

CALLING UP SOUND EXPERIENCE

Multimedia system:

Settings >> Vehicle >> Driving >> Sound Experience

SWITCHING SOUND EXPERIENCE ON OR OFF

- Switching Sound Experience on or off

CALLING UP SOUND EXPERIENCE

Multimedia system:

Settings >> Vehicle >> Driving >> Sound Experience

SWITCHING SOUND EXPERIENCE ON OR OFF

- Switch Sound Experience inside or Sound Experience outside on or off.

The availability of the Sound Experience outside is country-dependent.

SELECTING SOUND EXPERIENCE STYLE

- Select a style.

Styles are already available, for example Vivid Flux.

You can purchase additional styles through the Mercedes me Portal.

The availability of styles that can be purchased is country-dependent.

Maintenance and care

This interactive PDF works like a website – tap or click a button to jump straight to where you want to go.
You can return here at any time via the navigation bar at the top left.

ASSYST PLUS service interval display
Maintenance Management
Telediagnostics
Engine compartment
Cleaning and care

ASSYST PLUS service interval display

Function of the ASSYST PLUS service interval display

The ASSYST PLUS service interval display on the driver display informs you of the next regular service due date.

Depending on the operating conditions of the vehicle, the remaining time or distance until the next service due date will be displayed.

You can hide this service display using the back button on the steering wheel.

You can obtain information concerning the servicing of your vehicle from a qualified specialist workshop, e.g. a Mercedes-Benz service centre (→ page 105).

Displaying the service due date

Driver display:

→ Service

The next service due date is displayed.

- **To exit the display:** press the back button on the steering wheel.

Displaying the service due date

Driver display:

→ Service

The next service due date is displayed.

- **To exit the display:** press the back button on the steering wheel.

Information on performing regular service work

NOTE

Premature wear through failure to observe service due dates

Service work which is not carried out at the right time or incompletely can lead to increased wear and damage to the vehicle.

- Observe the specified service intervals. If there are any uncertainties regarding the service due date, forexample if the battery is disconnected, operating conditions are difficult, etc., contact a qualified specialist workshop.
- Have the prescribed service work carried out at a qualified specialist workshop.

NOTE
Irreparable damage to the high-voltage battery due to maintenance work not being carried out

The high-voltage battery is subject to wear. Maintenance work which is not carried out in time can lead to irreparable damage to the high-voltage battery.

- Always observe the warning messages about the high-voltage battery and immediately consult a qualified specialist workshop.
- Have the necessary maintenance work on the high-voltage battery carried out at a qualified specialist workshop.

Notes on special servicing measures

The prescribed service interval is based on normal operation of the vehicle. Have the servicing work carried out more often than prescribed if operating conditions are difficult or the vehicle is subject to increased stress. These situations could arise if the vehicle is regularly used on mountainous terrain or on poor road surfaces, forexample.

In these or similar operating conditions, have the interior air filter changed more frequently, forexample. Check the tyres more frequently if the vehicle is operated in tougher conditions. Further information can be obtained at a qualified specialist workshop.

The ASSYST PLUS service interval display serves solely as an aid. The driver of the vehicle is responsible for ensuring that servicing work is carried out more often than prescribed due to the actual operating conditions and/or increased stress.

Non-operational times with disconnected battery

The ASSYST PLUS service interval display can only calculate the service due date when the battery is connected.

- Display and note down the service due date on the driver display before disconnecting the battery (⟶ page 602).
- The period with disconnected battery is not taken into account by ASSYST PLUS. Deduct the period with disconnected battery from the time indicated on the driver display.
  - The calculated date serves as a new service due date.
  - The service interval for distance before service due date (km) is not affected in this regard.

Maintenance Management

Notes about Maintenance Management

If the Maintenance Management service is activated, relevant data is automatically transferred to the Mercedes-Benz customer centre.

The customer centre transmits the data to the service partner that you have entered on the Mercedes-Benz website at: https://www.mercedes.me. You will then receive individual recommendations regarding the maintenance of your vehicle.

The calculation of the optimal transmission time of the maintenance request to the service partner is subject to technical limitations that may cause the maintenance recommendation to be perceived as too early or too late or not to be made at all. In this case, you can conveniently arrange a maintenance appointment with the customer centre via the maintenance reminder in the multimedia system.

Maintenance Management and the maintenance reminder in the multimedia system are not available in every country. Contact a Mercedes-Benz service centre to find out whether this function is available in your country.

Data transferred when using Maintenance Management

When the service is activated, relevant data is automatically transferred to determine the required scope of maintenance as well as fault detection and fault rectification.

Details on data transmission can be found in the data protection notes for Mercedes-Benz Support. These can be found at: https://www.mercedes.me under "My Account", "Privacy & Legal".

Maintenance Management and the maintenance reminder in the multimedia system are not available in every country.

Telediagnostics

Notes about Telediagnosis

This service is not available in all countries.

The vehicle can detect if certain wear parts need to be replaced or if malfunctions have occurred in vehicle systems. If the Telediagnosis service is activated, relevant data is automatically transmitted to the manufacturer. If fault conditions are detected by the vehicle system self-diagnosis, the system transmits recommendations for action to the Mercedes-Benz customer centre depending on the fault detected. The customer centre transmits the data to the service partner that you have entered on the Mercedes-Benz website at: https://www.mercedes.me.

For selected faults, the notification that a malfunction has been detected may appear in the multimedia system with a request to contact the Mercedes-Benz Customer Centre. From this message, a call can be made directly to the customer centre for assistance.

The transmission of a notification to the multimedia system depends on the country, vehicle model and equipment and requires a fast data connection, over which the service provider has no influence.

Reliable fault detection is subject to technical limitations. Therefore, only a limited selection of faults can be detected and recommendations for action transmitted to the customer centre and the service partners. Mercedes-Benz AG is continuously working on the expansion of this service. The fault detection depends on the country, vehicle model and equipment.

Data transferred when using Telediagnosis

When the service is activated, relevant data is automatically transferred to determine the required scope of maintenance as well as fault detection and fault rectification.

Details on data transmission can be found in the data protection notes for Mercedes-Benz Support. These can be found at: https://www.mercedes.me under "My Account", "Privacy & Legal".

The scope of the transmitted data depends on the vehicle model and its equipment. For technical reasons, not all data is available at all times.

Engine compartment

Active bonnet (pedestrian protection)

OPERATION OF THE ACTIVE BONNET (PEDESTRIAN PROTECTION)

In certain accident situations, the risk of injury to pedestrians can be reduced by the actuation of the active bonnet. The rear section of the bonnet is raised for this purpose.

After being triggered, the active bonnet remains in the raised position. Limited visibility due to the raised bonnet cannot be ruled out.

After the active bonnet has been actuated, pedestrian protection may be limited.

Have the full functionality of the active bonnet restored immediately in a qualified specialist workshop.

If necessary, adjust your seat position and drive carefully to a qualified specialist workshop. If a safe continued journey is not possible, contact a qualified specialist workshop.

RESETTING THE ACTIVE BONNET

WARNING
Risk of burns from hot components in the engine compartment

Certain components in the engine compartment can be very hot, e.g. the drive system and the cooler.

- Allow the drive system to cool down and touch only the components described below.

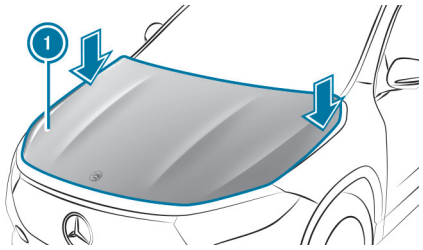

- With your hand flat, push down active bonnet (1) in the area around the hinges on both sides (arrows).

  In doing so, the actuator is depressurised and you may hear a hissing sound.

  The engine bonnet must engage in position.

- If active bonnet (1) can be raised slightly at the rear in the area of the hinges, repeat the step until it engages correctly.

Opening and closing the bonnet

DANGER
Risk of fatal injuries when carrying out maintenance work during the charging process

During the charging process, the high-voltage on-board electrical system is under high voltage.

- ► Do not perform any maintenance work during the charging process.

WARNING
Risk of accident due to driving with the bonnet unlocked

The bonnet may open and block your view.

- ► Never release the bonnet when driving.
- ► Before every trip, ensure that the engine bonnet is locked.

WARNING
Risk of accident and injury when opening and closing the bonnet

The bonnet may suddenly drop into the end position.

There is a risk of injury for anyone in the engine bonnet's range of movement.

- ► Do not open or close the bonnet if there is a person in the bonnet's range of movement.

WARNING
Risk of injury due to overheated vehicle

IF YOU OPEN THE BONNET IN THE EVENT OF AN OVERHEATED VEHICLE OR FIRE IN THE ENGINE COMPARTMENT, THE FOLLOWING SITUATIONS MAY OCCUR:

- You may come into contact with hot gases.
- You may come into contact with other escaping hot operating fluids.

- ► In the event of overheating or fire in the engine compartment, keep the bonnet closed and call the fire service.
- ► Allow the overheated vehicle to cool down first if you need to open the bonnet.

WARNING
Risk of injury due to moving parts

Components in the engine compartment may continue to run or start unexpectedly even when the drive system is switched off.

Observe the following if you must open the bonnet:

- ► Switch off the vehicle.
- ► Never touch the danger zones surrounding moving components, e.g. the rotation area of the fan.
- ► Remove jewellery and watches.
- ► Keep items of clothing and hair away from moving parts.

WARNING
Risk of burns from hot components in the engine compartment

Certain components in the engine compartment can be very hot, e.g. the drive system and the cooler.

- Allow the drive system to cool down and touch only the components described below.

WARNING
Risk of injury from using the windscreen wipers when the bonnet is open

If the windscreen wipers start moving when the bonnet is open, you could be trapped by the wiper linkage.

- Always switch off the windscreen wipers and the vehicle first if you need to open the bonnet.

OPENING THE BONNET

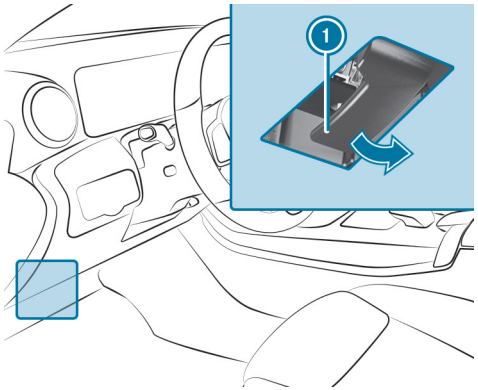

- To release the bonnet, pull on handle (1).

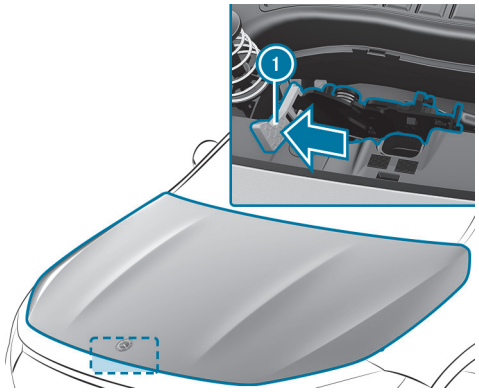

- Push yellow handle (1) on the bonnet catch to the left as far as it will go (palm downwards). Lift the bonnet until it is automatically raised by the pneumatic spring.

CLOSING THE BONNET

- Lower the bonnet and let it drop from a height of approximately 20 cm.
- If the bonnet can still be lifted slightly, open the bonnet again and close it with a little force until it engages correctly.

Checking the coolant level

DANGER
Risk of fatal injuries when carrying out maintenance work during the charging process

During the charging process, the high-voltage on-board electrical system is under high voltage.

- ► Do not perform any maintenance work during the charging process.

WARNING
Risk of injury due to overheated vehicle

IF YOU OPEN THE BONNET IN THE EVENT OF AN OVERHEATED VEHICLE OR FIRE IN THE ENGINE COMPARTMENT, THE FOLLOWING SITUATIONS MAY OCCUR:

- You may come into contact with hot gases.
- You may come into contact with other escaping hot operating fluids.

- ► In the event of overheating or fire in the engine compartment, keep the bonnet closed and call the fire service.
- ► Allow the overheated vehicle to cool down first if you need to open the bonnet.

WARNING
Risk of injury due to moving parts

Components in the engine compartment may continue to run or start unexpectedly even when the drive system is switched off.

Observe the following if you must open the bonnet:

- ► Switch off the vehicle.
- ► Never touch the danger zones surrounding moving components, e.g. the rotation area of the fan.
- ► Remove jewellery and watches.
- ► Keep items of clothing and hair away from moving parts.

WARNING
Risk of scalding from hot coolant

You may scald yourself if you open the cap when the drive system is at normal operating temperature.

- ► Allow the drive system to cool down before opening the cap.
- ► When opening the cap, wear protective gloves and safety glasses.
- ► Open the cap slowly to release pressure.

- ► Have the coolant checked or refilled only at a qualified specialist workshop.

Topping up the windscreen washer system

DANGER
Risk of fatal injuries when carrying out maintenance work during the charging process

During the charging process, the high-voltage on-board electrical system is under high voltage.

- ► Do not perform any maintenance work during the charging process.

WARNING
Risk of injury due to overheated vehicle

IF YOU OPEN THE BONNET IN THE EVENT OF AN OVERHEATED VEHICLE OR FIRE IN THE ENGINE COMPARTMENT, THE FOLLOWING SITUATIONS MAY OCCUR:

- You may come into contact with hot gases.
- You may come into contact with other escaping hot operating fluids.

- ► In the event of overheating or fire in the engine compartment, keep the bonnet closed and call the fire service.
- ► Allow the overheated vehicle to cool down first if you need to open the bonnet.

WARNING
Risk of injury due to moving parts

Components in the engine compartment may continue to run or start unexpectedly even when the drive system is switched off.

Observe the following if you must open the bonnet:

- ► Switch off the vehicle.
- ► Never touch the danger zones surrounding moving components, e.g. the rotation area of the fan.
- ► Remove jewellery and watches.
- ► Keep items of clothing and hair away from moving parts.

WARNING
Risk of burns from hot components in the engine compartment

Certain components in the engine compartment can be very hot, e.g. the drive system and the cooler.

- ► Allow the drive system to cool down and touch only the components described below.

WARNING
Risk of fire and injury from windscreen washer concentrate

Windscreen washer concentrate is highly flammable.

- Avoid fire, naked flames, smoking and the creation of sparks when using windscreen washer concentrate.

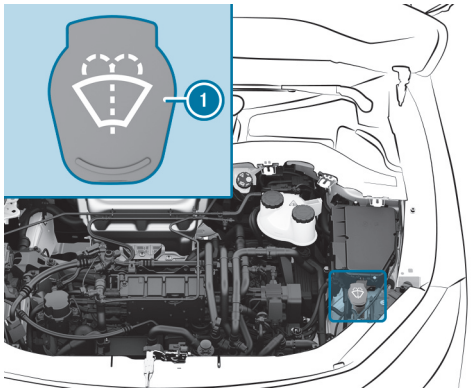

- Remove cap (1) by the tab.
- Top up the washer fluid.

Keeping the air/water duct free

- Keep the area between the bonnet and the windscreen free of deposits, e.g. ice, snow or leaves.

Cleaning and care

Information on washing the vehicle in a car wash

WARNING
Risk of an accident due to reduced braking power after washing the vehicle

Braking efficiency is reduced after washing the vehicle.

- ► After the vehicle has been washed, brake carefully while paying attention to the traffic conditions until braking power has been fully restored.

NOTE
Damage from automatic braking

THE VEHICLE WILL BRAKE AUTONOMOUSLY IN CERTAIN SITUATIONS IF THE FOLLOWING FUNCTIONS ARE SWITCHED ON:

- Active Brake Assist
- Active Distance Assist DISTRONIC
- HOLD function
- Active Parking Assist

To avoid damage to the vehicle, switch these systems off e.g. before towing it or in a car wash.

NOTE
Damage due to unsuitable car wash

- ► Before driving into a car wash make sure that the car wash is suitable for the vehicle dimensions.
- ► Ensure there is sufficient ground clearance between the underbody and the guide rails of the car wash.
- ► Ensure that the clearance width of the car wash, in particular the width of the guide rails, is sufficient.

TO AVOID DAMAGE TO YOUR VEHICLE WHEN USING A CAR WASH, ENSURE THE FOLLOWING BEFOREHAND:

- Active Distance Assist DISTRONIC is switched off.
- The HOLD function is switched off.
- The 360° camera or the reversing camera is switched off.
- The side windows and sliding sunroof are completely closed.
- The blower for the ventilation and heating is switched off.
- The windscreen wiper switch is in position 0.
- The key is at least 3 m away from the vehicle. Otherwise the tailgate could open unintentionally.
- For car washes with conveyor systems:
  - Neutral gear N is engaged.
  - If you leave the vehicle while it is being washed, ensure the key is located in the vehicle. The park position P is otherwise automatically engaged.

ⓘ Removing the wax from the windscreen and the wiper rubber after washing the vehicle will help to avoid smearing and reduce wiper noise.

Car wash mode

In car wash mode, the vehicle is configured in readiness for entering an automatic car wash. Car wash mode can be activated up to a speed of 20 km/h (→ page 614).

THE FOLLOWING SETTINGS WILL BE ADJUSTED WHEN CAR WASH MODE IS ACTIVATED:

- The outside mirrors will be folded in.
- To prevent the windscreen washer system from starting up automatically, the rain sensor will be deactivated.
- The rear window wiper will be deactivated.
- The windows and the sliding sunroof will be closed.
- Parking Assist PARKTRONIC will be deactivated.
- **Vehicles with 360° camera:** the front image will be activated after approximately eight seconds.

If one of the settings cannot be selected, this is displayed by a X behind the respective setting.

Car wash mode will automatically be deactivated above a speed of 20 km/h.

THE FOLLOWING SETTINGS WILL BE RESET WHEN CAR WASH MODE IS DEACTIVATED:

- The outside mirrors will be folded out.
- The rain sensor will be activated.
- The rear window wiper will be activated.
- Parking Assist PARKTRONIC will be reset to the previously selected setting.
- The windows and the sliding sunroof will remain closed.
- **Vehicles with 360° camera:** the front image will be deactivated at speeds above 18 km/h.

Activating/deactivating car wash mode

Requirements:

- The vehicle is stationary.
- The vehicle is switched on.

Multimedia system:

Settings » Vehicle » Driving

ACTIVATING CAR WASH MODE

► Select Car wash mode.

► Select Activate.

If one of the settings cannot be selected, this will be indicated by a [X] next to the respective setting.

ⓘ For an overview of the settings provided when you activate car wash mode (⟶ page 613).

DEACTIVATING CAR WASH MODE

► Select Switch off.

The car wash mode settings will be reset.

ⓘ Car wash mode will be automatically deactivated as soon as your speed exceeds 20 km/h.

Information on using a high-pressure cleaner

⚠ **WARNING**
Risk of an accident when using high-pressure cleaners with round-spray nozzles

The water jet can cause externally invisible damage.

Components damaged in this way may unexpectedly fail.

► Do not use a high-pressure cleaner with round-spray nozzles.

► Have damaged tyres or chassis parts replaced immediately.

TO AVOID DAMAGE TO YOUR VEHICLE, OBSERVE THE FOLLOWING WHEN USING A HIGH-PRESSURE CLEANER:

- Keep the key at least 3 m away from the vehicle. Otherwise the tailgate could open unintentionally.
- Maintain a distance of at least 30 cm to the vehicle.
- **Vehicles with decorative films:** Parts of your vehicle are covered with a decorative film. Maintain a distance of at least 70 cm between the film-covered parts of the vehicle and the nozzle of the high-pressure cleaner. Move the nozzle of the high-pressure cleaner around while cleaning. The water temperature of the high-pressure cleaner must not exceed 60°C.
- Observe the information on the correct distance in the equipment manufacturer's operating instructions.
- Do not direct the nozzle of the high-pressure cleaner directly at sensitive parts, e.g. tyres, gaps, electrical components, batteries, illuminants or louvres.

Washing the vehicle by hand

Observe the relevant legal requirements (for example in some countries, washing by hand is permitted only in specially designated wash bays).

- ► Use a mild cleaning agent, e.g. car shampoo.
- ► Do not use acidic cleaning agents.
- ► Wash the vehicle with lukewarm water using a soft car sponge. When doing so, do not expose the vehicle to direct sunlight.
- ► Carefully hose the vehicle off with water and dry using a chamois.

ⓘ Observe the notes on the care of car parts (⟶ page 617).

Notes on paintwork/matt finish paintwork care

To avoid damaging the paintwork and interfering with the driving assistance systems, please observe the following notes:

PAINT

- Insect remains: soak with insect remover and rinse off the treated areas afterwards.
- Bird droppings: soak with water and rinse off afterwards.
- Tree resin, oils, fuels and greases: remove by rubbing gently with a cloth soaked in petroleum ether or lighter fluid.
- Coolant and brake fluid: remove with a damp cloth and clean water.
- Tar stains: use tar remover.
- Wax: use silicone remover.
- Do not attach stickers, foil or similar materials. Only have foil attached to the bumper at a qualified specialist workshop.
- Remove dirt immediately, where possible. Do not use acid solutions and acidic cleaners.

MATT FINISH

- Only use care products approved for Mercedes-Benz.
- Do not attach stickers, foils or similar materials. Only have foil attached to the bumper at a qualified specialist workshop.
- Do not polish the vehicle and light-alloy wheels.
- Only use car washes that correspond to the latest engineering standards.
- Do not use car wash programmes with a final hot wax treatment.
- Do not use paint cleaners, buffing or polishing products, gloss preservers, e.g.wax.

IN THE EVENT OF PAINTWORK DAMAGE:

- Always have paintwork repairs carried out at a qualified specialist workshop.
- Make sure the radar sensors are working (⟶ page 348).

Notes on cleaning decorative foils

Observe the "Notes on paintwork / matt finish paintwork care" (⟶ page 615). They also apply to matt decorative films.

Observe the notes on cleaning decorative films to avoid damage.

CLEANING

- When cleaning with the high-pressure cleaner, maintain a distance of at least 70 cm between the foil-covered parts of the vehicle and the nozzle of the high-pressure cleaner.

- For cleaning, use plenty of water and a mild cleaning agent without additives or abrasive substances (e.g. a car shampoo approved for Mercedes-Benz).
- Do not use acidic cleaning agents.
- Remove dirt as soon as possible. Avoid rubbing too hard in order not to damage the decorative film irreparably.
- If there is dirt on the finish or if the decorative film is dull: use the paint cleaner recommended and approved for Mercedes-Benz.
- Insect remains: Soak with insect remover and rinse off the treated areas afterwards.
- Bird droppings: Soak with water and rinse off afterwards.
- To prevent water stains, dry a film-wrapped vehicle with a soft, absorbent cloth after every car wash.

AVOIDING DAMAGE TO THE DECORATIVE FILM

- The service life and colouring of decorative films are impaired by:
  - Sunlight
  - Temperature (e.g. hot air blower)
  - Weather conditions
  - Stone chippings and dirt
  - Chemical cleaning agents
  - Oily products
- Do not use polish on matt decorative film. Polishing will have the effect of shining the film-wrapped surface.
- Do not treat matt or structured decorative films with wax. Permanent stains may occur.

Scratches, corrosive deposits, areas affected by corrosion and damage caused by incorrect care cannot always be completely repaired. In this case, contact a qualified specialist workshop.

You can obtain more information on care and cleaning agents from the manufacturer.

In the case of film-wrapped surfaces, visual differences may occur between the surfaces that were not protected by a decorative film after a decorative film has been removed.

ⓘ Have work or repairs to decorative films carried out at a qualified specialist workshop (e.g. at a Mercedes-Benz Service Centre).

Information on window films

NOTE
Damage to electronic components due to excess fluids

When window films have been retrofitted, fluids such as cleaning agents or water may run down and get behind trim parts of the vehicle interior and cause damage to electronic components.

► Use cleaning agents as sparingly as possible.

► Immediately absorb any excess fluids.

Notes on cleaning and care of vehicle parts

WARNING
Risk of entrapment if the windscreen wipers are switched on while the windscreen is being cleaned

If the windscreen wipers are set in motion while you are cleaning the windscreen or wiper blades, you can be trapped by the wiper arm.

- ► Always switch off the windscreen wipers and the drive system before cleaning the windscreen or wiper blades.

NOTE
Damage due to use of acidic cleaning agents

- ► Do not use acidic cleaning agents. Otherwise, the surfaces could be damaged.

To avoid damage to the vehicle, observe the notes on cleaning and care of the following car parts:

WINDOWS

NOTE
Damage to electronic components due to excess fluids

When cleaning the windows from the inside, fluids such as cleaning agents or water may run down and get behind trim parts of the vehicle interior and cause damage to electronic components.

- ► Use cleaning agents as sparingly as possible.
- ► Immediately absorb any excess fluids.

- Clean the windows on the inside and outside with a damp cloth and with a cleaning agent recommended for Mercedes-Benz.
- Do not use dry cloths or abrasive or solvent-based cleaning agents to clean the insides of windows.

After changing the wiper blades or treating the vehicle with wax, clean the windscreen thoroughly with cleaning agents recommended for Mercedes-Benz. Failure to observe the application instructions may result in damage, smear marks or dazzling spots.

Remove external misting or dirt on the windscreen within line of sight of the multifunction camera. Otherwise, driving systems and driving safety systems may become impaired or unavailable (→ page 348).

WHEELS AND RIMS

- Use water and acid-free rim cleaners.

- Do not use acidic rim cleaners to remove brake dust. This could damage wheel bolts and brake components.
- To avoid corrosion of the brake discs and brake linings, drive the vehicle for a few minutes after cleaning before parking up. The brake discs and brake linings will warm up and dry out.

WIPER BLADES

- Move the wiper arms into the replacement position (⟶ page 31).
- With the wiper arms folded out, clean the wiper blades with a damp cloth.

ⓘ Note that the wiper blades are coated. The coating may leave residue on a cloth. Do not rub the wiper blades excessively or clean them too often.

EXTERIOR LIGHTING

- Clean the lenses with a wet sponge and mild cleaning agent (e.g. car shampoo).
- Use only cleaning agents or cleaning cloths that are suitable for plastic lenses.

VEHICLE SOCKET (HIGH-VOLTAGE BATTERY)

- Use clean water and a soft cloth to clean the vehicle socket.
- Do not use high-pressure cleaners or cleaning agents (suchas soap).

SENSORS

- Clean the sensors in the front and rear sections of the vehicle with car shampoo, plenty of water and a soft cloth (⟶ page 348).
- When using a high-pressure cleaner, maintain a minimum distance of 30 cm.

CAMERAS

- Open the camera cover with the multimedia system (⟶ page 399).
- Use clean water and a soft cloth to clean the camera lenses.
- Do not use a high-pressure cleaner.

ⓘ Remove external misting or dirt on the windscreen within line of sight of the multifunction camera. Otherwise, driving systems and driving safety systems may become impaired or unavailable (⟶ page 348).

TRAILER HITCH

- Observe the notes on care in the trailer hitch manufacturer's manual.
- Do not clean the ball neck with a high-pressure cleaner or solvent.
- Remove traces of rust on the ball (e.g. with a wire brush).
- Remove dirt with a lint-free cloth.
- After cleaning, lightly oil or grease the ball head.

ⓘ Before using trailers with anti-swerve coupling, refer to the manufacturer's owner's manual.

Notes on interior care

WARNING
Risk of injury from plastic parts breaking off after the use of solvent-based care products

Care and cleaning products containing solvents can cause surfaces in the cockpit to become porous. When the airbags are deployed, plastic parts may break away.

► Do not use any care or cleaning products containing solvents to clean the cockpit.

WARNING
Risk of injury or fatal injuries from bleached seat belts

Bleaching or dyeing seat belts can severely weaken them.

This can, for example, cause seat belts to tear or fail in an accident.

► Never bleach or dye seat belts.

NOTE
Property damage due to disinfectants

The interior includes a number of sensitive surfaces such as displays, plastics and leather.

Disinfectants can contain alcohol and other substances that penetrate and damage surfaces. Technology behind buttons and displays can also be damaged.

► Do not use disinfectant on interior surfaces.

To avoid damage to the vehicle, observe the following notes on cleaning and care:

SEAT BELTS
- Clean with lukewarm, soapy water.
- Do not use chemical cleaning agents.
- Do not dry by heating to more than 80 °C or exposing to direct sunlight.

DISPLAY
- Switch off the display and allow it to cool.
- Clean the surface carefully with a microfibre cloth and a suitable display care product (TFT LCD).
- Do not use any other agents.

HEAD-UP DISPLAY
- Clean with a soft, non-static, lint-free cloth.
- Do not use cleaning agents.

PLASTIC TRIM
- Clean with a damp microfibre cloth.
- If it is very dirty, use a cleaning agent recommended for Mercedes-Benz.

- Do not attach stickers, plastic film or similar materials.
- Do not allow cosmetics, insect repellent or sun cream to come into contact with the plastic trim.

GENUINE WOOD AND TRIM ELEMENTS

- Clean with a microfibre cloth.
- Black piano-lacquer look: clean with a damp cloth and soapy water.
- If it is very dirty, use a cleaning agent recommended for Mercedes-Benz.
- Do not use solvent-based cleaning agents, polishes or waxes.

HEADLINER

- Clean with a brush or dry shampoo.

CARPET

- Use a carpets and textiles cleaning agent recommended for Mercedes-Benz.

IMITATION LEATHER STEERING WHEEL

- Clean the entire steering wheel with a damp cotton cloth and a 1% soap solution. Do not spot clean.
- Use cleaning and care products recommended for Mercedes-Benz.
- Do not use a microfibre cloth.
- Do not use oil-based cleaning and care products.

STEERING WHEEL MADE OF GENUINE LEATHER OR DINAMICA

NOTE
Damage caused by wrong cleaners

► Do not use solvent-based cleaning agents such as tar remover or wheel cleaner; neither should you use polishes or waxes. Otherwise you may damage the finish.

- Clean with a damp cloth and a 1% soap solution and then wipe with a dry cloth.
- If it is very dirty, use a cleaning agent recommended for Mercedes-Benz.
- Leather care: use a leather care agent recommended for Mercedes-Benz.
- Do not allow the leather to become too damp.
- Do not use a microfibre cloth.

Leather is a natural product. It has natural surface characteristics, such as differences in structure, marks caused by growth and injury or subtle colour differences. These surface characteristics are particular to leather, and are not material defects. Leather is also subject to a natural ageing process, which changes the surface characteristics.

GENUINE LEATHER SEAT COVERS

- Vacuum up dirt suchas crumbs or dust and then clean the seat covers with a damp cotton cloth and wipe down with a dry cloth. Regularly clean the seat covers.
- If they are very dirty, use an aftercare leather care agent recommended for Mercedes-Benz.
- Leather care: use a leather care agent recommended for Mercedes-Benz.
- Do not use a microfibre cloth.
- Do not allow the leather to become too damp.
- Do not use oil-based cleaning and care products.

Leather is a natural product. It has natural surface characteristics, such as differences in structure, marks caused by growth and injury or subtle colour differences. These surface characteristics are particular to leather, and are not material defects. Leather is also subject to a natural ageing process, which changes the surface characteristics.
Waves or wrinkling in the seat cover may occur due to the stress on the seat; this is caused by the natural leather material.
Regular cleaning and care of the leather will reduce dirt build-up, wear marks and ageing damage and thus significantly extend its life span. Clothing that can leave stains (e.g. jeans) may discolour the leather.

DINAMICA SEAT COVERS

- Vacuum up contaminants, suchas crumbs or dust and then use a damp cloth to clean.
- Do not use a microfibre cloth.

IMITATION LEATHER SEAT COVERS

- Vacuum up dirt suchas crumbs or dust and then use a damp cotton cloth and a 1% soap solution to clean the entire seat cover. Do not spot clean.
- Use cleaning and care products recommended for Mercedes-Benz.
- Do not use a microfibre cloth.
- Do not use oil-based cleaning and care products.

CLOTH SEAT COVERS

- Vacuum up dirt suchas crumbs or dust and then use a damp microfibre cloth and a 1% soap solution to clean the entire seat cover. Do not spot clean.
- Use cleaning and care products recommended for Mercedes-Benz.
- Do not use oil-based cleaning and care products.

Back to Contents

Breakdown assistance

This interactive PDF works like a website – tap or click a button to jump straight to where you want to go.
You can return here at any time via the navigation bar at the top left.

Emergency
Flat tyre
Battery (vehicle)
Tow-starting or towing away
Electrical fuses

Emergency

Removing the safety vest

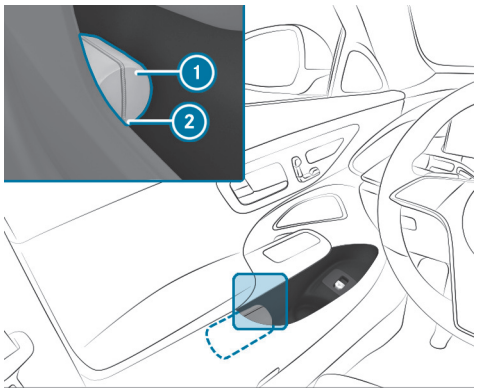

There is a safety vest stowage recess in the door stowage compartments of all doors for storing the safety vests.

- ► To remove: pull out the safety vest bag (1) using the loop (2).
- ► Open the safety vest bag (1) and take out the safety vest.
- ► To replace: fold the safety vest, roll it up and insert it into the safety vest bag (1).
- ► Slide the safety vest bag (1) along the underside of the armrest into the safety vest stowage recess. Ensure that the loop (2) remains hanging out so that it is easy to grasp.

ⓘ Remove the packaging film from a new safety vest before sliding it into the safety vest stowage recess. Otherwise, it may slide out unintentionally or the packaging may hinder its removal.
Observe the legal requirements for the individual countries.

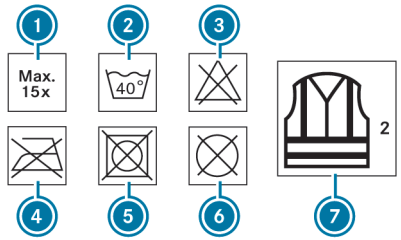

(1) Maximum number of washes
(2) Maximum wash temperature
(3) Do not bleach
(4) Do not iron
(5) Do not tumble dry
(6) Do not dry clean
(7) Class 2 safety vest

The requirements defined by the legal standard are only fulfilled if the safety vest is the correct size and is fully closed.

EXCHANGE THE SAFETY VEST IN THE FOLLOWING CASES:

- The reflective strips are damaged or dirty.

- The maximum permissible number of washes is exceeded.
- The fluorescence property decreases, e.g. due to permanent exposure to sunlight.

DISPOSE OF THE SAFETY VEST IN AN ENVIRONMENTALLY FRIENDLY WAY:

- Please contact your local waste disposal company.

Warning triangle

REMOVING THE WARNING TRIANGLE

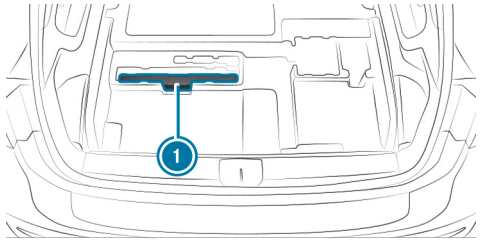

Vehicles with two seat rows

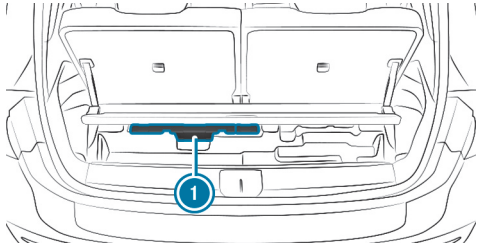

Vehicles with three seat rows

- ► Open the load compartment floor.
- ► Remove the warning triangle (1).

SETTING UP THE WARNING TRIANGLE

- ► Fold the side reflectors upwards to form a triangle and attach using the upper snap fastener .
- ► Fold the legs down and out to the side.

First-aid kit overview

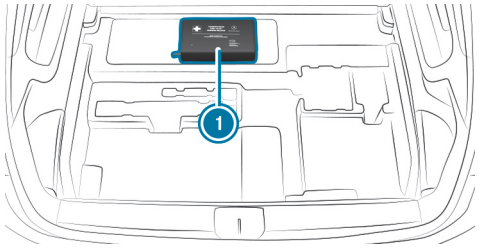

Vehicles with two seat rows

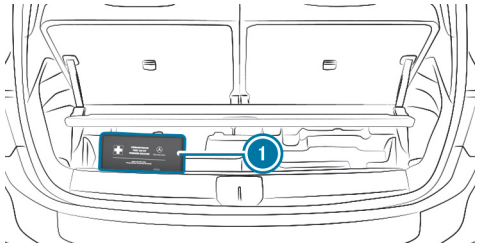

Vehicles with three seat rows

The first-aid kit (1) is located under the load compartment floor.

Removing the fire extinguisher

WARNING
Risk of accident due to an incorrectly secured fire extinguisher in the driver's footwell

A fire extinguisher may impede pedal travel or block a depressed pedal.

This jeopardises the operating and road safety of the vehicle.

The fire extinguisher can be flung around and injure the driver or other vehicle occupants.

- Always store and secure the fire extinguisher in the bracket.
- Do not remove the fire extinguisher while driving.

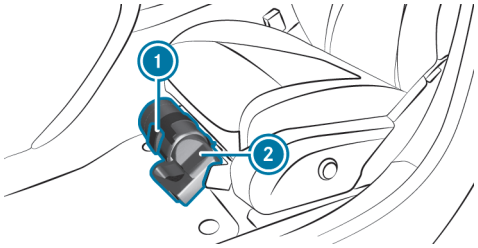

- Pull the tab (1) upwards.
- Fold the tab (1) down.
- Remove the fire extinguisher (2).

Flat tyre

Notes on flat tyres

WARNING
Risk of accident due to a flat tyre

A flat tyre severely affects the driving characteristics as well as steering and braking.

tyres that do not feature run-flat characteristics:

- ► Do not drive on with a flat tyre.
- ► Change the flat tyre immediately with an emergency spare wheel or spare wheel. Alternatively, consult a qualified specialist workshop.

Run-flat tyres:

- ► Observe the information and warning notes on MOExtended tyres (run-flat tyres).

IN THE EVENT OF A FLAT TYRE, THE FOLLOWING OPTIONS ARE AVAILABLE DEPENDING ON YOUR VEHICLE'S EQUIPMENT:

- **Vehicles with MOExtended tyres:** it is possible to continue the journey for a short period of time. Make sure you observe the notes on MOExtended tyres (run-flat tyres) (⟶ page 627).
- **Vehicles with a TIREFIT kit:** you can seal the tyre so that it is possible to continue the journey for a short period of time. To do this, use the TIREFIT kit (⟶ page 628).
- **Vehicles with Mercedes-Benz Support:** in the event of a breakdown, you can make a breakdown call via the overhead control panel (⟶ page 559).
- **All vehicles:** change the wheel (⟶ page 663).

ⓘ The emergency spare wheel is only available in certain countries (⟶ page 668).

Notes on MOExtended tyres (run-flat tyres)

WARNING
Risk of accident when driving in limp-home mode

Driving in emergency mode impairs the handling characteristics of the vehicle.

- ► Do not exceed the permissible maximum speed of the MOExtended tyres.
- ► Avoid any abrupt steering and driving manoeuvres as well as driving over obstacles (kerbs, pot holes, off-road). This applies, in particular, to a loaded vehicle.
- ► Stop driving in the emergency mode if you notice:
  - banging noise
  - vehicle vibration
  - smoke which smells like rubber
  - continuous ESP® intervention
  - cracks in the tyre sidewalls
- ► After driving in emergency mode, have the rims checked by a qualified specialist workshop with regard to their further use.
- ► The defective tyre must be replaced in every case.

With MOExtended tyres (run-flat tyres), you can continue to drive your vehicle even if there is a total loss of pressure in one or more tyres. However, the tyre affected must not show any clearly visible damage.

You can recognise MOExtended tyres by the MOExtended marking which appears on the side wall of the tyre.

Vehicles with tyre pressure monitoring system: MOExtended tyres may only be used in conjunction with an activated tyre pressure monitoring system.

IF A PRESSURE LOSS WARNING MESSAGE APPEARS IN THE DRIVER'S DISPLAY, PROCEED AS FOLLOWS:

- Check the tyre for damage.
- If driving on, observe the following notes.

DRIVING DISTANCE POSSIBLE IN EMERGENCY MODE AFTER THE PRESSURE LOSS WARNING:

Load condition	Driving distance possible in emergency mode
Partially laden	80 km
Fully laden	30 km

The driving distance possible in emergency mode may vary depending on the driving style. Observe the maximum permissible speed of 80 km/h.

If a tyre has gone flat and cannot be replaced with an MOExtended tyre, you can use a standard tyre as a temporary measure.

TIREFIT kit storage location

The TIREFIT kit is located under the load compartment floor.

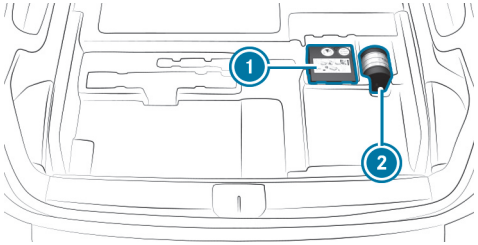

Vehicles with two rows of seats

1 Tyre inflation compressor
2 Tyre sealant bottle

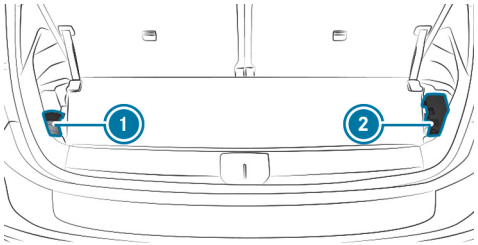

Vehicles with three rows of seats

1 Tyre sealant bottle
2 Tyre inflation compressor

Depending on the vehicle version, the TIREFIT kit may be located in other positions in the load compartment.

YOU CAN FIND INFORMATION ON THE POWER CATEGORY (LK) AND/OR ELECTRICAL DATA ON THE BACK OF THE TYRE INFLATION COMPRESSOR:

- LK2 – 12 V/15 A, 180 W, 0.8 kg

AT A DISTANCE OF APPROXIMATELY 1 M TO THE TYRE INFLATION COMPRESSOR AND APPROXIMATELY 1.6 M ABOVE THE GROUND, THE FOLLOWING SOUND PRESSURE LEVELS APPLY:

- Emission sound pressure level L_{PA} 83 dB (A)
- Sound power level L_{WA} 91 dB (A)

The tyre inflation compressor is maintenance-free. If there is a malfunction, please contact a qualified specialist workshop.

Using the TIREFIT kit

Requirements:

- Tyre sealant bottle and tyre inflation compressor are ready for use (⟶ page 60).
- The TIREFIT sticker is displayed.
- Gloves are at hand.

You can use TIREFIT tyre sealant to seal perforation damage of up to 4 mm, particularly on the tyre contact surface. You can use TIREFIT in outside temperatures down to -20 °C.

WARNING
Risk of accident when using tyre sealant

The tyre sealant may be unable to seal the tyre properly, especially in the following cases:

- there are large cuts or punctures in the tyre (larger than damage previously mentioned)
- the wheel rims have been damaged
- after journeys with very low tyre pressure or with flat tyres

► Do not continue driving.

► Consult a qualified specialist workshop.

WARNING
Risk of injury and poisoning from tyre sealant

Tyre sealant is hazardous to health and causes irritation. Do not allow it to come into contact with your skin, eyes or clothing, and do not swallow it. Do not inhale any vapours. Keep the tyre sealant away from children.

Observe the following if you come into contact with the tyre sealant:

► Rinse off the tyre sealant from your skin using water immediately.

► If tyre sealant gets into your eyes, thoroughly rinse them using clean water immediately.

► If tyre sealant has been swallowed, thoroughly rinse out your mouth immediately and drink plenty of water. Do not induce vomiting and seek medical attention immediately.

► Change out of clothing which has come into contact with tyre sealant immediately.

► If an allergic reaction occurs, seek medical attention immediately.

NOTE
Overheating due to the tyre inflation compressor running too long

► Do not run the tyre inflation compressor for longer than ten minutes without interruption.

Observe the manufacturer's safety notes on the sticker on the tyre sealant bottle.

Have the tyre sealant bottle replaced at a qualified specialist workshop every five years.

- Do not remove any foreign objects that have pierced the tyre.

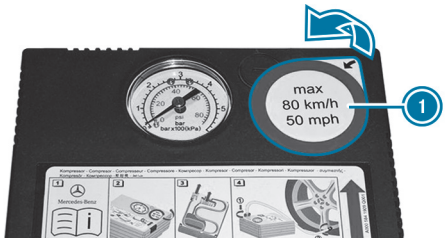

- Remove the sticker (1) from the tyre inflation compressor housing and affix it onto the driver display within the driver's field of vision.

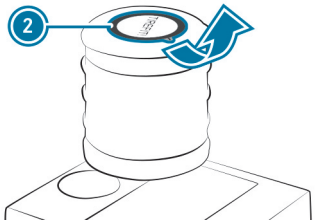

- Remove the sticker (2) from the tyre sealant bottle and affix it near the valve on the wheel with the defective tyre.

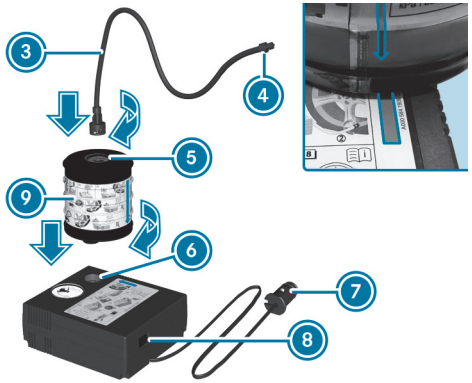

- Pull the plug (7) with cable and filling hose (3) out of the tyre inflation compressor housing.
- Insert the tyre sealant bottle (9) into the socket (6) of the tyre inflation compressor so that the red arrow on tyre sealant bottle (9) aligns with the red arrow on the tyre inflation compressor.
- Rotate the tyre sealant bottle (9) clockwise around a quarter of a turn.
- Insert the plug of the filling hose (3) into the socket (5) of the tyre sealant bottle (9).
- Rotate the filling hose (3) clockwise around a quarter of a turn.

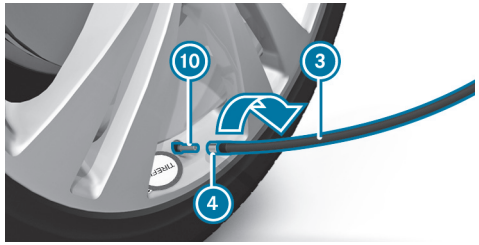

- Remove the valve cap from the valve (10) on the faulty tyre.
- Screw the union nut (4) of the filling hose (3) onto the valve (10).

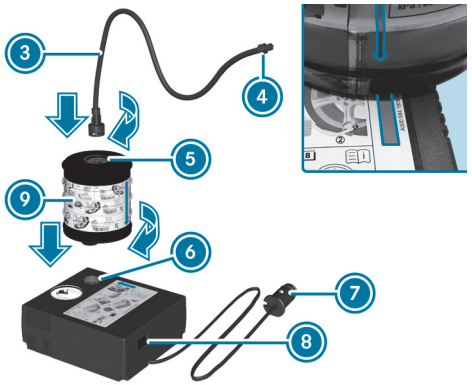

- Insert the plug (7) into a 12-V-socket in your vehicle (⟶ page 256).
- Switch on the vehicle.
- Press the On/Off switch (8) on the tyre inflation compressor.

  The tyre inflation compressor is switched on. The tyre will be inflated. First, tyre sealant is pumped into the tyre. The pressure may briefly rise to approximately 500 kPa (5 bar/73 psi).

Do not switch off the tyre inflation compressor during this phase!

- Allow the tyre inflation compressor to run for a maximum of ten minutes.

  The tyre should then have reached a tyre pressure of at least 200 kPa (2.0 bar/29 psi).

If tyre sealant leaks out, ensure that the affected area is cleaned as quickly as possible. Ideally, use clean water.

If you get tyre sealant on your clothing, have it cleaned with perchloroethylene at a dry cleaner's as soon as possible.

IF, AFTER TEN MINUTES, A TYRE PRESSURE OF 200 KPA (2.0 BAR/29 PSI) IS NOT REACHED:

- Switch off the tyre inflation compressor.
- Unscrew the filling hose from the valve of the defective tyre.

Please note that tyre sealant may leak out when unscrewing the filling hose.

- Drive the vehicle forwards or in reverse very slowly for approximately 10 m.
- Inflate the tyre again.

  After a maximum of ten minutes the tyre pressure must be at least 200 kPa (2.0 bar/29 psi).

WARNING
Risk of accident due to the specified tyre pressure not being attained

If the specified tyre pressure is not attained after the specified time, the tyre is too badly damaged. The tyre sealant cannot repair the tyre in this instance.

The braking and driving characteristics may be greatly impaired.

- Do not continue driving.
- Consult a qualified specialist workshop.

NOTE
Staining from leaking tyre sealant

After use, excess tyre sealant may leak out from the filling hose.

- Therefore, place the filling hose in the plastic bag that contained the TIREFIT kit.

IF, AFTER TEN MINUTES, A TYRE PRESSURE OF 200 KPA (2.0 BAR/29 PSI) IS REACHED:

- Switch off the tyre inflation compressor.
- Unscrew the filling hose from the valve of the defective tyre.

Please note that tyre sealant may leak out when unscrewing the filling hose.

WARNING
Risk of accident from driving with sealed tyres

A tyre temporarily sealed with tyre sealant impairs the handling characteristics and is not suitable for higher speeds.

- Adapt your driving style accordingly and drive carefully.
- Do not exceed the maximum speed limit with a tyre that has been repaired using tyre sealant.

- Observe the maximum permissible speed of 80 km/h for a tyre sealed with tyre sealant.
- The sticker providing details of the maximum permissible speed must be affixed to the driver display where it can be clearly seen by the driver.

NOTE
Staining from leaking tyre sealant

After use, excess tyre sealant may leak out from the filling hose.

- Therefore, place the filling hose in the plastic bag that contained the TIREFIT kit.

ENVIRONMENTAL NOTE
Environmental pollution caused by environmentally irresponsible disposal

Tyre sealant contains pollutants.

- Have the tyre sealant bottle disposed of professionally, e.g. at a Mercedes-Benz Service Centre.

- Stow the tyre sealant bottle, the tyre inflation compressor and the warning triangle.
- Pull away immediately.
- Stop driving after approximately ten minutes and check the tyre pressure using the tyre inflation compressor.
  The tyre pressure must now be at least 130 kPa (1.3 bar/19 psi).

WARNING
Risk of accident due to the specified tyre pressure not being attained

If the specified tyre pressure is not reached, the tyre is too badly damaged. The tyre sealant cannot repair the tyre in this instance.

The braking and driving characteristics may be greatly impaired.

- Do not continue driving.
- Consult a qualified specialist workshop.

Countries that have Mercedes-Benz Service24h: you will find a sticker with the telephone number, e.g. on the B-pillar on the driver's side.

- Correct the tyre pressure if it is still at least 130 kPa (1.3 bar/19 psi). For values, refer to the tyre pressure table on the fuel filler flap.

INCREASING THE TYRE PRESSURE

- Switch on the tyre inflation compressor.

DECREASING THE TYRE PRESSURE

- Remove the tyre sealant bottle from the tyre inflation compressor.
- Insert the filling hose into the socket of the tyre inflation compressor and rotate it clockwise around a quarter of a turn.

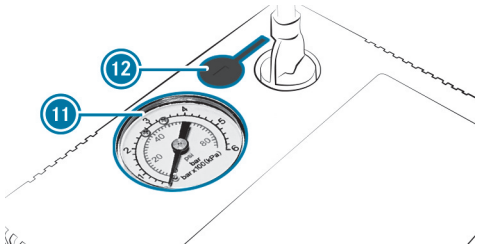

- Press the pressure release button (12) next to the manometer (11).

WHEN THE TYRE PRESSURE IS CORRECT

- Unscrew the filling hose from the valve of the sealed tyre.
- Screw the valve cap onto the valve of the sealed tyre.
- Stow the tyre sealant bottle and the tyre inflation compressor.
- Drive to the nearest qualified specialist workshop and have the tyre, tyre sealant bottle and filling hose replaced.

Battery (vehicle)

Notes on the 12 V battery

WARNING
Risk of explosion due to electrostatic charge

Electrostatic charge can ignite the highly explosive gas mixture in the battery.

- To discharge any electrostatic charge that may have built up, touch the metal vehicle body before handling the battery.

The highly flammable gas mixture is created while the battery is charging and during starting assistance.

For safety reasons, Mercedes-Benz recommends that you only use batteries which have been tested and approved for your vehicle by Mercedes-Benz.

WARNING
Danger of chemical burns from the battery acid

Battery acid is caustic.

- Avoid contact with the skin, eyes or clothing.
- Do not lean over the battery.
- Do not inhale battery gases.
- Keep children away from the battery.
- Immediately rinse battery acid off thoroughly with plenty of clean water and seek medical attention immediately.

ENVIRONMENTAL NOTE
Environmental damage due to improper disposal of batteries

Batteries contain pollutants. It is illegal to dispose of them with the household rubbish.

- Dispose of batteries in an environmentally responsible manner. Take discharged batteries to a qualified specialist workshop or to a collection point for used batteries.

Consult a qualified specialist workshop to disconnect the 12 V battery.

Comply with safety notes and take protective measures when handling batteries.

Risk of explosion.

Fire, open flame and smoking are prohibited when handling the battery. Avoid creating sparks.

Electrolyte or battery acid is corrosive. Avoid contact with your skin, eyes or clothing. Wear suitable protective clothing, in particular gloves, apron and face mask. Immediately rinse electrolyte or acid splashes off with clean water. Consult a doctor.

Wear safety glasses.

Keep children away.

Observe this Owner's Manual.

If you do not want to use the vehicle for a long period of time, consult a qualified specialist workshop.

Notes on the high-voltage battery

DANGER
Risk of fire and explosion from excessive internal pressure of the high-voltage battery

In the event of a vehicle fire, flammable gas can escape and ignite.

- Stop the charging process immediately in case of unusual odours, smoke or burn marks.
- Leave the danger zone immediately. Secure the danger zone at a sufficient distance.
- Call the fire service.

Observe the notes on charging the high-voltage battery (⟶ page 312).

Risk of explosion.

Fire, naked flames and smoking are prohibited when handling the battery. Avoid creating sparks.

Electrolyte or battery acid is corrosive. Avoid contact with the skin, eyes or clothing. Wear suitable protective clothing, in particular gloves, an apron and a face mask. Immediately rinse electrolyte or acid splashes off with clean water. Consult a doctor.

Wear safety glasses.

Keep children away.

Observe this Owner's Manual.

Notes on starting assistance and charging the 12 V battery

ALL VEHICLES
Always use the jump-start connection point in the engine compartment for charging the battery and jump starting.

NOTE
Damage to the battery due to overvoltage

When charging using a battery charger without a maximum charging voltage, the battery or the on-board electronics may be damaged.

- Only use battery chargers with a maximum charging voltage of 14.8 V.

WARNING
Risk of explosion due to the ignition of hydrogen gas

If there is a short circuit or sparks are created, there is a danger of hydrogen gas igniting when you charge the battery.

- Take care that the positive terminal of a connected battery does not come into contact with vehicle parts.
- Never place metal objects or tools on a battery.
- When connecting and disconnecting the battery, always observe the sequence of battery terminals described.
- During starting assistance, always take care to connect only battery terminals of identical polarity.
- During starting assistance, observe the sequence described for connecting and disconnecting the jump leads.
- Do not connect or disconnect the battery terminals with the engine running.

WARNING
Risk of explosion due to explosive mixture of gases

An explosive mixture of gases can escape from the battery during charging and starting assistance.

- ► Fire, naked flames, smoking and creating sparks must be avoided.
- ► Make sure there is adequate ventilation.
- ► Do not stand over the battery.

WARNING
Risk of explosion from a frozen battery

A discharged battery may freeze at temperatures slightly above or below freezing point.

During starting assistance or battery charging, battery gas can be released.

- ► Always allow a battery to thaw before charging it or performing starting assistance.

If the indicator/warning lamps in the driver display do not light up at low temperatures, the discharged battery is very likely frozen. In this case you may neither jump-start the vehicle nor charge the battery.

The service life of a defrosted battery may be drastically shortened. The starting behaviour may deteriorate, in particular at low temperatures.

It is recommended to have a defrosted battery checked at a qualified specialist workshop.

ALL VEHICLES

NOTE
Damage caused by numerous or extended attempts to start the engine

Numerous or extended attempts to start the engine may damage the catalytic converter due to non-combusted fuel.

- ► Avoid numerous and extended attempts to start the engine.

OBSERVE THE FOLLOWING POINTS DURING STARTING ASSISTANCE AND WHEN CHARGING THE BATTERY:

- Only use undamaged jump leads/charging cables with a sufficient cross-section and insulated terminal clamps.
- Uninsulated parts of the terminal clamps must not come into contact with other metal parts as long as the jump leads/charging cables are connected to the battery/the jump-start connection point.
- The jump leads/charging cables must not touch any parts which may move when the engine is running.
- Make sure that neither you nor the battery are electrostatically charged.
- Keep away from fire and naked flames.
- Do not stand over the battery.

ALSO OBSERVE THE FOLLOWING POINTS WHEN CHARGING THE BATTERY:

- Only use chargers tested and approved for Mercedes-Benz.
- Read the operating instructions for the charger, then charge the battery.

ALSO NOTE THE FOLLOWING POINTS DURING STARTING ASSISTANCE:

- Starting assistance may only be provided using vehicles, batteries or other jump start devices with a nominal voltage of 12 V.
- The vehicles must not touch each other.

Starting assistance and charging the 12-V-battery

- ▶ Only have starting assistance provided by a qualified specialist workshop, e.g. a Mercedes-Benz Service Centre.
- ▶ Only have the battery charged at a qualified specialist workshop, e.g. a Mercedes-Benz Service Centre.

Replacing the 12-V-battery

- ▶ Only have the battery replaced at a qualified specialist workshop, e.g. at a Mercedes-Benz Service Centre.

Tow-starting or towing away

Overview of the permitted towing methods

NOTE
Damage from automatic braking

THE VEHICLE WILL BRAKE AUTONOMOUSLY IN CERTAIN SITUATIONS IF THE FOLLOWING FUNCTIONS ARE SWITCHED ON:

- Active Brake Assist
- Active Distance Assist DISTRONIC
- HOLD function
- Active Parking Assist

To avoid damage to the vehicle, switch these systems off e.g. before towing it or in a car wash.

Mercedes-Benz recommends transporting your vehicle in the case of a breakdown, rather than towing it.

For towing with both axles on the ground, use a tow rope or tow bar. Do not use tow bar systems.

If you notice that the vehicle has lost coolant, do not have it towed. Have the vehicle transported instead.

NOTE
Damage to the vehicle due to towing away incorrectly

► Observe the instructions and notes on towing away.

VEHICLES WITH FRONT WHEEL DRIVE

Permitted towing methods	
Both axles on the ground	Yes, for a maximum of 50 km at 50 km/h*, only forwards with the driver in the cockpit
Front axle raised	Yes, for a maximum of 50 km at 50 km/h
Rear axle raised	No

*The towing range can be significantly lower depending on the active auxiliary consumers and environmental conditions (⟶ page 61).

4MATIC VEHICLES

Permitted towing methods	
Both axles on the ground	Yes, for a maximum of 50 km at 50 km/h*, only forwards with the driver in the cockpit
Front axle raised	No
Rear axle raised	No

*The towing range can be significantly lower depending on the active auxiliary consumers and environmental conditions (⟶ page 61).

Towing the vehicle with both axles on the ground

► Observe the notes on the permitted towing methods (⟶ page 639).

► Make sure that the 12 V battery is connected and charged.

OBSERVE THE FOLLOWING POINTS WHEN THE 12 V BATTERY IS DISCONNECTED OR DISCHARGED:

- The drive system cannot be started.
- The electric parking brake cannot be released or applied.
- The selector lever cannot be put into position N or P.

IF AT LEAST ONE OF THE FOLLOWING CONDITIONS APPLIES, TRANSPORTING THE VEHICLE IS THE ONLY POSSIBLE OPTION:

- If the high-voltage battery is discharged.
- If the selector lever cannot be put into position N.
- If the 12 V battery is disconnected or discharged.
- If the driver display has failed.
- If the Towing not permitted See Owner's Manual display message is shown.

  Exception: if the vehicle is located in a danger zone, it can be recovered from the danger zone despite the display message.

  It must not be towed further than 100 m with both axles on the ground. A towing speed of 10 km/h must not be exceeded. Beyond these limits, only transporting is permitted.

- If the Top up coolant See Owner's Manual display message is shown.
- If the Stop Switch off the vehicle display message is shown.

► In such cases, transport the vehicle (⟶ page 642).

NOTE

Damage due to towing away at excessively high speeds or over long distances

The drivetrain could be damaged when towing at excessively high speeds or over long distances.

► A towing speed of 50 km/h must not be exceeded.

► A towing distance of 50 km must not be exceeded.

WARNING
Risk of accident when towing a vehicle with too much weight

IF THE VEHICLE TO BE TOWED IS HEAVIER THAN THE PERMISSIBLE GROSS MASS OF YOUR VEHICLE, THE FOLLOWING SITUATIONS CAN ARISE:

- The towing eye breaks off.
- The combination oscillates and can capsize.

► Before towing, check whether the vehicle to be towed exceeds the permissible gross mass.

If a vehicle is to be towed away, its permissible gross mass must not exceed the permissible gross mass of the towing vehicle.

► Information on the permissible gross mass of the vehicle can be found on the vehicle identification plate (⟶ page 737).

TOWING THE VEHICLE

► Fit the towing eye (⟶ page 643).

► Fasten the towing device.

NOTE
Damage due to incorrect connection of the tow bar

► Only connect the tow rope or tow bar to the towing eyes.

► Deactivate the automatic locking mechanism (⟶ page 177).

► Do not activate the HOLD function (⟶ page 354).

► Deactivate tow-away protection (⟶ page 200).

► Deactivate Active Brake Assist (⟶ page 378).

► Put the selector lever into position N.

► Release the electric parking brake.

► Remain in the cockpit during towing and observe the display messages.

► Do not switch off the vehicle while it is being towed.

► Do not open the driver's door or front passenger door, because otherwise the selector lever automatically switches to position P.

WARNING
Risk of accident due to limited safety-related functions during the towing process

SAFETY-RELATED FUNCTIONS ARE LIMITED OR NO LONGER AVAILABLE IN THE FOLLOWING SITUATIONS:

- the vehicle is switched off.
- the brake system or power steering system is malfunctioning.
- the energy supply or the on-board electrical system is malfunctioning.

► In such cases, do not tow the vehicle.

► Transport the vehicle (⟶ page 642).

NOTE
Damage to the drive system due to incorrect towing

THE VEHICLE MUST NOT BE TOWED IN THE FOLLOWING SITUATIONS:

- The vehicle is switched off.
- The brake system or the power steering is faulty.
- The power supply or the on-board electrical system is faulty.

► Do not tow the vehicle in these situations.

NOTE
Damage due to excessive tractive power

If you pull away sharply, the tractive power may be too high and the vehicles could be damaged.

► Pull away slowly and smoothly.

Loading up the vehicle for transport

► Observe the notes on towing away (⟶ page 61).

► Connect the towing device to the towing eye in order to load up the vehicle.

► Shift the transmission to position N.

The transmission may be locked in position P in the event of damage to the electrics. To shift to N, supply power to the on-board electrical system (⟶ page 58).

► Load the vehicle correctly onto the transporter.
- Ensure that all wheels are on the transportation surface.
- Ensure that the vehicle is positioned parallel with the direction of travel.

► Put the selector lever into position P.

► Use the electric parking brake to secure the vehicle against rolling away.

► Stop the vehicle and switch off the power supply.

► Only secure the vehicle by the wheels.

VEHICLES WITH ADAPTIVE DAMPING SYSTEM

WARNING
Risk of an accident when transporting vehicles with adaptive damping adjustment

When transporting vehicles with adaptive damping adjustment, the vehicle/trailer combination may begin to rock and start to skid.

► Load the vehicle correctly onto the transporter.

► Secure the vehicle on all four wheels with suitable tensioning straps.

NOTE
Vehicle damage due to incorrect lashing

- Secure the vehicle at all four wheels after loading it up. Otherwise, the vehicle could be damaged.
- Keep a minimum distance of 20 cm above and 10 cm below the transport platform.

- Load the vehicle correctly onto the transporter.
  - Ensure that all wheels are on the transportation surface.
  - Ensure that the vehicle is positioned parallel with the direction of travel.
- Put the selector lever into position P.
- Use the electric parking brake to secure the vehicle against rolling away.
- Stop the vehicle and switch off the power supply.
- Secure the vehicle at all four wheels.

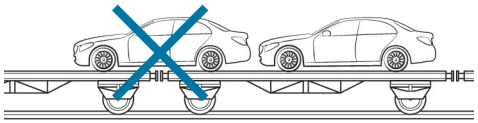

- Make sure that the front and rear axles come to rest on the same transport vehicle.

NOTE
Damage to the drive train due to incorrect positioning of the vehicle

- Do not position the vehicle above the connection point of the transport vehicle.

Towing eye storage location

The towing eye is under the load compartment floor.

Fitting and removing the towing eye

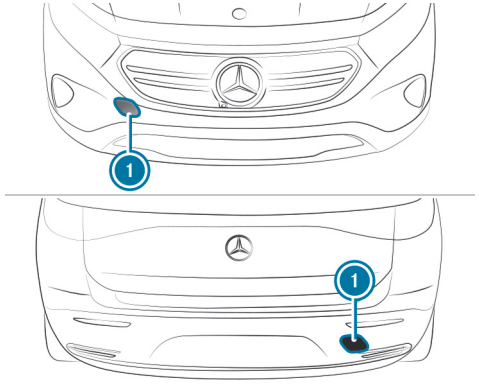

- Press the cover (1) inwards at the marking and remove.
- Screw in the towing eye in a clockwise direction as far as it will go and tighten.

Vehicles with trailer hitch: vehicles with trailer hitch do not feature a holding fixture at the back for the towing eye. Affix the towing device to the trailer hitch.

- After removing the towing eye, reattach the cover (1) in the bumper.

NOTE
Damage to the vehicle as a result of incorrect use of the towing eye or trailer hitch

The vehicle could sustain damage if the towing eye or trailer hitch is used to haul the vehicle out of a ditch during recovery situations.

- The towing eye and trailer hitch should only be used to tow the vehicle.
- Do not use the towing eye or trailer hitch to haul the vehicle out of a ditch during recovery situations.

Tow-starting the vehicle

- If the drive system does not start, have the vehicle transported to a qualified specialist workshop, e.g. a Mercedes-Benz Service Centre.
- The drive system is not started by tow-starting the vehicle. Do not make any attempts to tow-start the vehicle.

Electrical fuses

Notes on electrical fuses

WARNING
Risk of accident and injury due to overloaded lines

If you manipulate or bridge a faulty fuse or if you replace it with a fuse with a higher amperage, the electric line could be overloaded.

This could result in a fire.

- Always replace faulty fuses with specified new fuses containing the correct amperage.

NOTE
Damage due to incorrect fuses

Using incorrect fuses can result in damage to electrical components or systems or their functions being considerably restricted.

- Use only fuses approved for Mercedes-Benz with the respective specified fuse rating.

Replace blown fuses with equivalent fuses, identifiable by their colour and label. The fuse ratings and further information to be observed can be found in the fuse assignment diagram.

Fuse assignment diagram: on the fuse box in the engine compartment (→ page 646).

NOTE
Damage or malfunctions caused by moisture

Moisture may cause damage to the electrical system or cause it to malfunction.

- When the fuse box is open, make sure that no moisture can enter the fuse box.
- When closing the fuse box, make sure that the seal of the lid is positioned correctly on the fuse box.

If the newly inserted fuse also blows, have the cause determined and rectified at a qualified specialist workshop.

ENSURE THE FOLLOWING BEFORE REPLACING A FUSE:

- The vehicle is secured against rolling away.
- All electrical consumers are switched off.
- The vehicle is switched off.

THE ELECTRICAL FUSES ARE LOCATED IN VARIOUS FUSE BOXES:

- Fuse box in the engine compartment on the left-hand side of the vehicle, when viewed in the direction of travel (→ page 646)

- Fuse box in the front passenger footwell (⟶ page 647)
- Fuse box in the centre of the load compartment (⟶ page 648)

Opening and closing the fuse box in the engine compartment

Requirements:

- A dry cloth and a screwdriver are available.

Observe the notes on electrical fuses (⟶ page 58).

OPEN

WARNING
Risk of injury from using the windscreen wipers when the bonnet is open

If the windscreen wipers start moving when the bonnet is open, you could be trapped by the wiper linkage.

► Always switch off the windscreen wipers and vehicle before opening the engine bonnet.

► Open the bonnet.

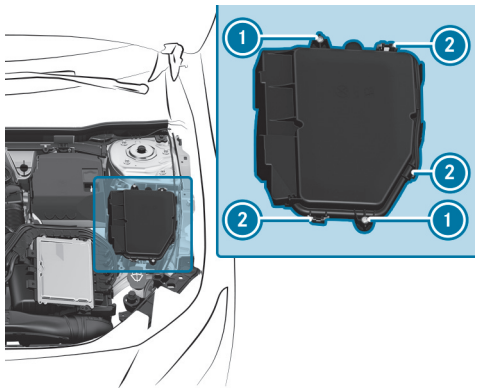

► Remove any existing moisture from the fuse box using a dry cloth.

► Loosen screws (1).

► Press clamps (2) and lift the fuse box lid up and out.

The fuse assignment diagram is in a recess on the side of the fuse box.

CLOSING

► Check whether the seal is positioned correctly in the lid.

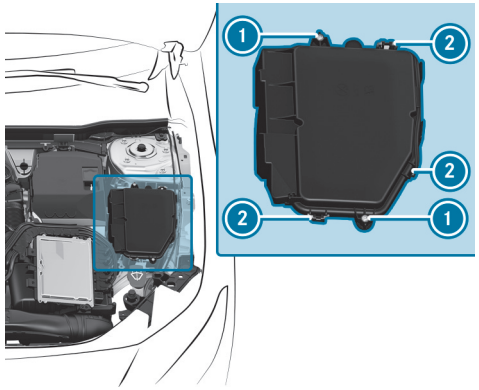

- Place the lid on the fuse box.
- Make sure that clamps (2) engage.
- Tighten screws (1).
- Close the bonnet.

Opening and closing the fuse box in the front passenger footwell

Requirements

Observe the notes on electrical fuses (⟶ page 58).

OPENING

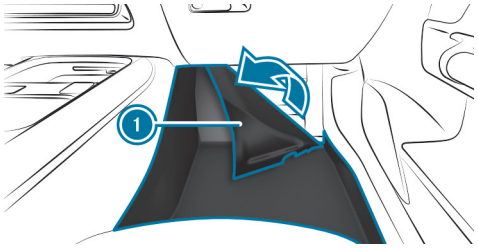

- Lift carpet (1) in the direction of the arrow.

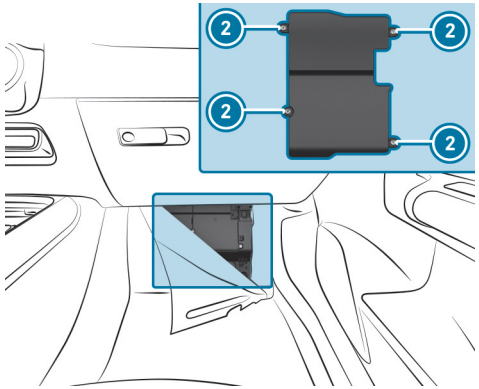

- Loosen screws (2) and remove the fuse box lid from the top.

CLOSING

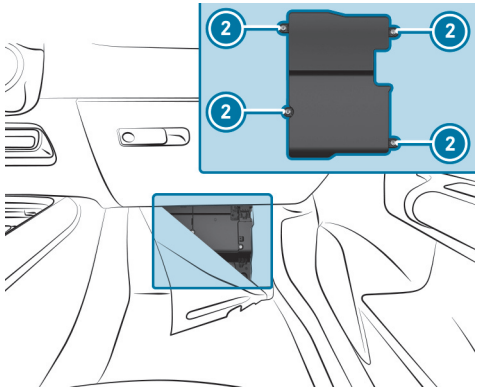

- Place the lid on the fuse box.
- Tighten screws (2).
- Fold back the carpet.

Opening and closing the fuse box in the load compartment

Requirements

Observe the notes on electrical fuses (⟶ page 58).

► Open the load compartment floor.

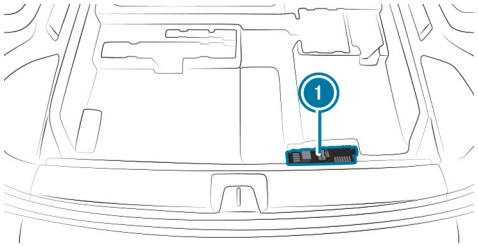

Fuse box (1) is located underneath the load compartment floor.

Back to Contents

Wheels and tyres

This interactive PDF works like a website – tap or click a button to jump straight to where you want to go.
You can return here at any time via the navigation bar at the top left.

Notes on noise or unusual handling characteristics
Notes on regularly inspecting wheels and tyres
Notes on snow chains
Tyre pressure
Wheel change
Emergency spare wheel

Notes on noise or unusual handling characteristics

Make sure there are no vibrations, noises or unusual handling characteristics when the vehicle is in motion. This may indicate that the wheels or tyres are damaged. Hidden tyre damage could also be causing the unusual handling characteristics.

If you suspect that a tyre is defective, reduce your speed immediately and have the tyres and wheels checked at a qualified specialist workshop.

Notes on regularly inspecting wheels and tyres

WARNING
Risk of injury due to damaged tyres

Damaged tyres can cause tyre pressure loss.

► Check the tyres regularly for signs of damage and replace any damaged tyres immediately.

WARNING
Risk of aquaplaning due to insufficient tyre tread

Insufficient tyre tread will result in reduced tyre grip. There is a risk of an accident.

On a wet road surface the risk of aquaplaning is increased, in particular where speed is not adapted to suit the conditions.

► Check the tread depth and the condition of the tyre contact surface across the entire width of all tyres on a regular basis.

MINIMUM TREAD DEPTH FOR

- Summer tyres: 3 mm
- M+S tyres: 4 mm

► For safety reasons, replace the tyres before the legally-prescribed limit for the minimum tread depth is reached.

► Replace the tyres immediately if the legally-prescribed limit for the minimum tread depth is reached.

CARRY OUT THE FOLLOWING CHECKS ON ALL WHEELS REGULARLY, AT LEAST ONCE A MONTH OR AS REQUIRED, FOR EXAMPLE, PRIOR TO A LONG JOURNEY OR DRIVING OFF-ROAD:

- Check the tyre pressure (⟶ page 654).

- Visually inspect wheels and tyres for damage.
- Check the valve caps.
- Visual check of the tyre tread depth and the tyre contact surface across the entire width.

  The minimum tread depth for summer tyres is 3 mm and for winter tyres 4 mm.

Notes on snow chains

WARNING
Risk of accident due to incorrectly fitted snow chains

If you have fitted snow chains to the rear wheels, they may drag against the vehicle body or chassis components.

- ► Never fit snow chains on the rear wheels.
- ► Only fit snow chains on the front wheels in pairs.

NOTE
Damage to vehicle body or suspension components caused by fitted snow chains

On 4MATIC vehicles, if you fit snow chains on the rear wheels, you can damage vehicle body or suspension components.

- ► On 4MATIC vehicles, only fit snow chains on the front wheels.

OBSERVE THE FOLLOWING NOTES WHEN USING SNOW CHAINS:

- Snow chains are only permissible for certain wheel/tyre combinations. You can obtain information about this from a Mercedes-Benz Service Centre.
- For safety reasons, only use snow chains that have been specifically approved for your vehicle by Mercedes-Benz, or snow chains of the same quality standard.
- If snow chains are fitted, the maximum permissible speed is 50 km/h.
- **Vehicles with Active Parking Assist:** Do not use Active Parking Assist when snow chains are fitted.

ⓘ You can permanently limit the speed for driving with winter tyres (⟶ page 360).

ⓘ You can deactivate ESP® to start off (⟶ page 353). This allows the wheels to spin, achieving increased tractive power.

Tyre pressure

Notes on tyre pressure

WARNING
Risk of an accident due to tyre pressure that is insufficient or too high

TYRES WITH A PRESSURE THAT IS INSUFFICIENT OR TOO HIGH POSE THE FOLLOWING DANGERS IN PARTICULAR:

- The tyres can burst.
- The tyres can wear excessively and/or unevenly.
- The driving characteristics as well as the steering- and braking may be greatly impaired.

► Observe the recommended tyre pressures and check the tyre pressure of all tyres including the spare wheel:

- monthly
- when the load changes
- before embarking on a longer journey
- when the operating conditions change, e.g. off-road driving
- when driving at over 250 km/h

► Adjust the tyre pressure, if necessary.

HIGH OR LOW TYRE PRESSURE CAN:

- Shorten the service life of the tyres.
- Cause increased tyre damage.
- Adversely affect driving characteristics and thus driving safety, e.g. due to aquaplaning.

WARNING
Risk of accident due to repeated pressure drop in the tyres

The wheels, valves or tyres could be damaged.

Too low a tyre pressure can lead to the tyres bursting.

► Examine the tyres for foreign objects.

► Check whether the tyre has a puncture or the valve has a leak.

► If you are unable to rectify the damage, contact a qualified specialist workshop.

Information on the recommended tyre pressure for the vehicle's factory-fitted tyres can be found on the tyre pressure table on the inside of the socket flap (⟶ page 655).

Use a suitable pressure gauge to check the tyre pressure. The outer appearance of a tyre does not permit any reliable conclusion about the tyre pressure.

ONLY CORRECT TYRE PRESSURES WHEN THE TYRES ARE COLD. CONDITIONS FOR COLD TYRES:

- The vehicle has been parked with the tyres out of direct sunlight for at least three hours.
- The vehicle has travelled less than 1.6 km.

The vehicle's tyres heat up when driving. As the temperature of the tyres increases, so too does the tyre pressure.

Vehicles with a tyre pressure monitoring system: you can also see the tyre pressure in the driver display (⟶ page 656).

NOTES ON TRAILER OPERATION
Always inflate the rear axle tyres to the recommended tyre pressures on the tyre pressure table for increased load.

Tyre pressure table

The tyre pressure table is on the inside of the socket flap.

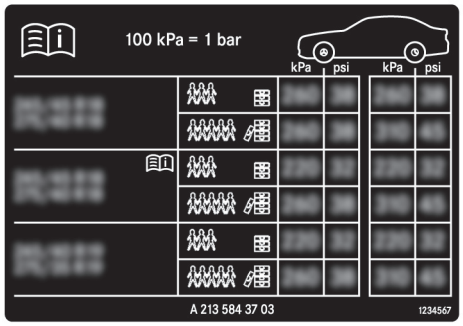

The tyre pressure table shows the recommended tyre pressure for all tyres approved for this vehicle. The recommended tyre pressures apply for cold tyres under various operating conditions, i.e. load and/or speed of the vehicle.

If one or more tyre sizes precede a tyre pressure, the tyre pressure information following is only valid for those tyre sizes.

If the preceding tyre sizes are complemented by the symbol, the tyre pressure information following shows alternative tyre pressures. These tyre pressures may improve your vehicle's ride comfort. Energy consumption may then increase slightly.

The load conditions "partially laden" and "fully laden" are defined in the table for different numbers of passengers and amounts of luggage. The actual number of seats may differ from this.

BE SURE TO ALSO OBSERVE THE FOLLOWING FURTHER RELATED TOPICS:

- Notes on tyre pressure (⟶ page 654)

Tyre pressure monitoring system

FUNCTION OF THE TYRE PRESSURE MONITORING SYSTEM
The system checks the tyre pressure and the temperature of the tyres fitted to the vehicle by means of a tyre pressure sensor.

The tyre pressure and the tyre temperature are displayed on the driver display.

In the event of significant pressure loss or excessive temperature of the tyres, you will be warned by display messages (⟶ page 801) or the warning light on the driver display (⟶ page 816).

The tyre pressure monitoring system serves solely as an aid. It is the driver's responsibility to set the tyre pressure to the recommended cold tyre pressure suitable for the operating situation.

In most cases, the tyre pressure monitoring system will automatically update the new reference values after you have changed the tyre pressure. You can, however, also update the reference values by restarting the tyre pressure monitoring system manually (⟶ page 656).

SYSTEM LIMITS

THE SYSTEM MAY BE IMPAIRED OR INOPERATIVE IN THE FOLLOWING SITUATIONS IN PARTICULAR:

- Incorrect reference values were taught in.
- Sudden pressure loss caused, e.g. by a foreign object penetrating the tyre.
- There is a malfunction caused by another radio signal source.

CHECKING THE TYRE PRESSURE WITH THE TYRE PRESSURE MONITORING SYSTEM

Requirements:

- The vehicle is switched on.

Driver display:

→ ⌂ » Service

► Press OK to confirm.

ONE OF THE FOLLOWING MESSAGES APPEARS:

- Current tyre pressure of each wheel:



- Tyre pressures will be displayed after a few minutes of driving: Current values are not yet known to the system. The pressure/temperature values of each tyre are displayed as soon as they are known to the system.
- Tyre pressure monitor active: the teach-in process of the system is not yet complete. The tyre pressures are already being monitored.

► Compare the current tyre pressure with the recommended tyre pressure for the current operating status (⟶ page 655). Additionally, observe the notes on cold tyres (⟶ page 654).

ⓘ The values displayed on the driver display may deviate from those of the tyre pressure gauge as they relate to sea level. At high elevations, the tyre pressure values indicated by a pressure gauge are higher than those shown on the driver display.

RESTARTING THE TYRE PRESSURE MONITORING SYSTEM

Requirements:

- The recommended tyre pressure is correctly set for the respective operating condition on each of the four wheels (⟶ page 654).

RESTART THE TYRE PRESSURE MONITORING SYSTEM IN THE FOLLOWING SITUATIONS:

- The tyre pressure has changed.
- The wheels or tyres have been changed or newly fitted.

Driver display:

→ Service

▶ Show tyre pressure: press OK.

▶ Show options: press OK again.

▶ Select Tyre pressure and confirm with OK.

The driver display shows the message Use current tyre pressures as new reference values?.

▶ Select Yes and confirm the restart with OK.

The driver display shows the message Tyre pressure monitor restarted.

Current warning messages are deleted and the yellow warning lamp goes out.

After you have driven for a few minutes, the system checks whether the current tyre pressures are within the specified range. The current tyre pressures are then accepted as reference values and monitored.

If the tyre pressure values are not within the prescribed range, the message Please correct tyre pressure appears.

Wheel change

Notes on selecting, fitting and replacing tyres

WARNING
Risk of accident due to incorrect wheel and tyre dimensions

If wheels and tyres of the wrong size are fitted, the service brakes or components in the brake system and in the wheel suspension may be damaged.

- ► Always replace wheels and tyres with those that fulfil the specifications of the original part.

FOR WHEELS, PAY ATTENTION TO THE FOLLOWING:

- Designation
- Type

FOR TYRES, PAY ATTENTION TO THE FOLLOWING:

- Designation
- Manufacturer
- Type

WARNING
Risk of injury through exceeding the specified tyre load-bearing capacity or the permissible speed rating

Exceeding the load-bearing capacity of the tyres can lead to tyre damage and could cause the tyres to explode.

- ► Therefore, only use tyre types and sizes approved for your vehicle model.
- ► Observe the tyre load-bearing capacity rating and speed rating required for your vehicle.

NOTE
Vehicle and tyre damage caused by non-approved tyre types and sizes

For safety reasons, only use tyres, wheels and accessories which have been specially approved by Mercedes-Benz for your vehicle.

THESE TYRES ARE SPECIFICALLY CONFIGURED FOR ACTIVE SAFETY SYSTEMS, E.G. ABS, ESP® AND 4MATIC, AND ARE MARKED AS FOLLOWS:

- MO = Mercedes-Benz Original
- MOE = Mercedes-Benz Original Extended (tyres with run-flat characteristics, only for certain wheels)
- MO1 = Mercedes-Benz Original (only certain AMG tyres)

Otherwise certain properties, e.g. driving characteristics, noise emissions, consumption, etc., could be adversely affected. Furthermore, other tyre sizes could result in the tyres rubbing against the body and axle components when loaded. This could result in damage to the tyre or the vehicle.

Only use tyres, wheels and accessories that have been checked and recommended by Mercedes-Benz.

NOTE
Risk to driving safety from retreaded tyres

Retreaded tyres are neither tested nor recommended by Mercedes-Benz, since previous damage cannot always be detected on retreaded tyres.

For this reason driving safety cannot be guaranteed.

► Do not use used tyres if you have no information about their previous usage.

NOTE
Possible wheel and tyre damage when driving over obstacles

Large wheels have a smaller section width. As the section width decreases, the risk of wheels and tyres being damaged when driving over obstacles increases.

► Avoid obstacles or drive especially carefully.

► Reduce your speed when driving over kerbs, speed bumps, manhole covers and potholes.

► Avoid particularly high kerbs.

NOTE
Possible wheel and tyre damage when parking on kerbs or in potholes

Parking on kerbs or in potholes can damage the wheels and tyres.

- ► Only park on level surfaces if possible.
- ► Avoid kerbs and potholes when parking.

NOTE
Damage to electronic component parts due to the use of tyre-fitting tools

Vehicles with tyre pressure monitoring system: there are electronic components in the wheel.

Positioning tyre-fitting tools in the area of the valve may damage the electronic components.

- ► Tyre-fitting tools should not be applied in the area of the valve.
- ► Always have tyres changed at a qualified specialist workshop.

NOTE
Damage to summer tyres at low ambient temperatures

At low ambient temperatures, tears could form when driving with summer tyres, causing permanent damage to the tyre.

- ► At temperatures below 7 °C use M+S tyres.

Accessory parts which are not approved for your vehicle by Mercedes-Benz, or which are not used correctly, can impair driving safety.

BEFORE PURCHASING AND USING NON-APPROVED ACCESSORIES, VISIT A QUALIFIED SPECIALIST WORKSHOP AND ENQUIRE ABOUT:

- Suitability
- Legal provisions
- Factory recommendations

WARNING
Risk of accident with sport tyres

The special tyre tread in combination with the optimised tyre compound means that the risk of skidding or aquaplaning on wet roads is increased.

In addition, the tyre grip is greatly reduced at a low outside temperature and tyre running temperature.

- ► Switch on the ESP® and adapt your driving style accordingly.
- ► Use M+S tyres at outside temperatures of less than 7 °C.
- ► Only use tyres suitable for the intended use.

OBSERVE THE FOLLOWING WHEN SELECTING, FITTING AND REPLACING TYRES:

- Country-specific requirements for tyre approval that define a specific tyre type for your vehicle.
- The use of certain tyre types in certain regions and areas of operation can be advisable.

- Only use tyres and wheels of the same type (summer tyres, winter tyres, MOExtended tyres) and the same make.
- Only fit wheels of the same size on one axle (left and right).

  Only fit a different size of wheel in the event of a flat tyre, to enable you to drive to a specialist workshop.
- Do not make any modifications to the brake system, the wheels or the tyres.

  The use of shims or brake dust shields is not permitted and may invalidate the vehicle's general operating permit.
- **Vehicles with a tyre pressure monitoring system:** All fitted wheels must be equipped with functioning sensors for the tyre pressure monitoring system.
- At temperatures below 7 °C, use winter tyres or all-season tyres marked M+S on all wheels.

  Winter tyres provide the best possible grip in wintry road conditions.
- For M+S tyres, only use tyres with the same tread.
- Observe the maximum permissible speed for the M+S tyres fitted.

  If the tyre's maximum speed is below that of the vehicle, this must be indicated by an appropriate label in the driver's field of vision.
- Drive the vehicle with new tyres at moderate speeds for the first 100 km.
- Replace the tyres after six years at the latest, regardless of wear.
- **When replacing with tyres that do not feature run-flat characteristics:** vehicles with MOExtended tyres are not supplied with a TIREFIT kit ex factory. Equip the vehicle with a TIREFIT kit after replacing with tyres that do not feature run-flat characteristics, e.g. winter tyres.

ⓘ You can permanently limit the speed for driving with winter tyres (⟶ page 360).

For more information on wheels and tyres, contact a qualified specialist workshop.

Notes on changing wheels

⚠ **WARNING**
Risk of injury through different wheel sizes

Interchanging the front and rear wheels can severely impair the driving characteristics.

The disk brakes or wheel suspension components may also be damaged.

► Only interchange the front and rear wheels if the wheels and tyres have the same dimensions.

Interchanging the front and rear wheels if the wheels or tyres have different dimensions can render the general operating permit invalid.
Observe the instructions and safety notes on "Changing a wheel" (⟶ page 658).

THE WEAR PATTERNS ON THE FRONT AND REAR WHEELS DIFFER:

- front wheels wear more on the tyre shoulder
- rear wheels wear more in the centre of the tyre

Do not drive with tyres that have too little tread depth. This significantly reduces traction on wet roads (aquaplaning).

On vehicles with the same front and rear wheel size, you can interchange the wheels every 5000 to 10,000 km, depending on the wear. Ensure the direction of rotation is maintained for the wheels.

Notes on storing wheels

WHEN STORING WHEELS, OBSERVE THE FOLLOWING NOTES:

- After removing wheels, store them in a cool, dry and preferably dark place.
- Protect the tyres from contact with oil, grease or fuel.

Overview of the tyre-change tool kit

With the exception of some country-specific variants, vehicles are not equipped with a tyre-change tool kit. For more information on which tyre-changing tools are required and approved for performing a wheel change on your vehicle, consult a qualified specialist workshop.

YOU REQUIRE THE FOLLOWING TOOLS, FOREXAMPLE, TO CHANGE A WHEEL:

- Jack
- Chock
- Wheel wrench
- Centring pin

The jack weighs approximately 3.4 kg.
The maximum load capacity of the jack can be found on the sticker affixed to the jack.
The jack is maintenance-free. In the event of a malfunction, please contact a qualified specialist workshop.

The tyre-change tool kit is located in the tool bag (1) in the load compartment.

When stowing the tool bag, ensure that it is adequately secured.

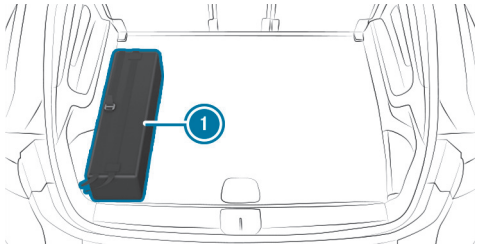

Vehicles with two seat rows

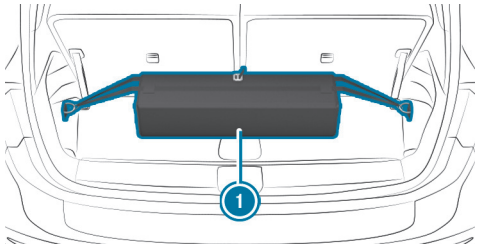

Vehicles with three seat rows

THE TOOL BAG CONTAINS:

- Jack
- Gloves
- Wheel wrench
- Centring pin
- Folding chock
- Ratchet wrench for jack

Preparing the vehicle for a wheel change

Requirements:

- The vehicle is not on a slope.
- The vehicle is on solid, non-slippery and level ground.
- The required tyre-change tool kit is available.

ⓘ If your vehicle is not equipped with the tyre-change tool kit, consult a qualified specialist workshop to find out about suitable tools.

- ▶ Apply the electric parking brake manually.
- ▶ Move the front wheels to the straight-ahead position.
- ▶ Shift the transmission to position P.
- ▶ Switch off the vehicle.
- ▶ Make sure that the vehicle cannot be started.
- ▶ Place wedges or other suitable items under the front and rear of the wheel that is diagonally opposite the wheel you wish to change.
- ▶ Unload the vehicle.

Raising the vehicle for a wheel change

Requirements:

- There are no persons in the vehicle.
- The vehicle has been prepared for a wheel change (⟶ page 663).

IMPORTANT NOTES ON USING THE JACK:

- Use only a vehicle-specific jack that has been approved for Mercedes-Benz to raise the vehicle.
- The jack is only designed for raising and holding the vehicle for a short time while a wheel is being changed and not for maintenance work under the vehicle.
- The jack must be placed on a firm, level and non-slip surface. If necessary, use a large, flat, load-bearing, non-slip underlay.
- The foot of the jack must be positioned vertically under the jack support point.

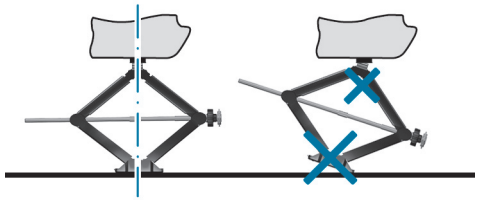

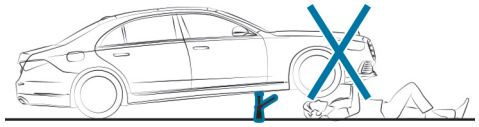

RULES OF CONDUCT WHEN THE VEHICLE IS RAISED:

- Do not put your hands or feet under the vehicle.

- Do not lie under the vehicle.
- Do not start the vehicle and do not release the electric parking brake.
- Do not open or close any doors or the tailgate.

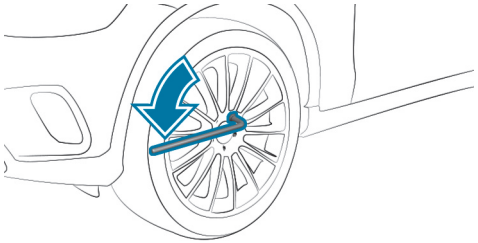

► Using the wheel spanner, loosen the wheel bolts on the wheel you wish to change by about one full turn. Do not unscrew the screws completely.

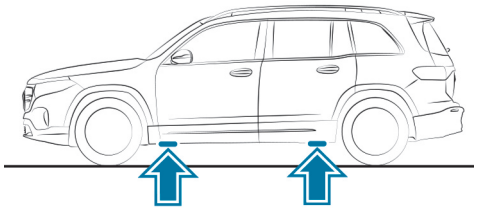

Position of the jack support points

WARNING
Risk of injury from incorrect positioning of the jack

If you do not position the jack correctly at the appropriate jacking point of the vehicle, the jack could tip with the vehicle raised.

► Only position the jack at the appropriate jacking point of the vehicle. The base of the jack must be positioned vertically under the jacking point of the vehicle.

NOTE
Damage to the vehicle due to using an unsuitable jack

If a jack is used which was not designed for the vehicle's jack support points, the vehicle and especially the high-voltage battery may suffer damage.

► Only use jacks that are specifically designed for the jack support points, or use a suitable adapter.

NOTE
Risk of damage to the vehicle due to incorrect positioning of the jack

If the vehicle jack has not been positioned at the prescribed jack support points, the vehicle and especially the high-voltage battery may suffer damage.

► Only position the jack at the designated jack support points.

- Take the ratchet wrench out of the tyre-change tool kit and place it on the hexagon nut of the jack in such a way that the lettering "AUF" is visible.

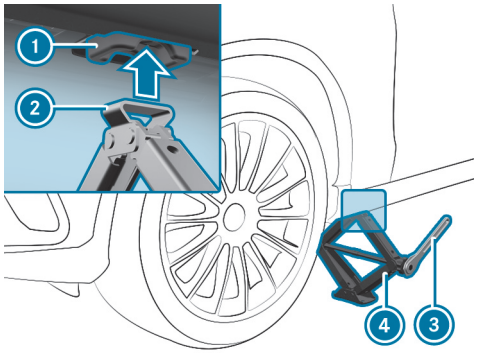

- Position support plate (2) of jack (4) in line with jack support point (1).
- Turn ratchet wrench (3) clockwise until support (2) sits completely on jack support point (1) and the base of the jack lies evenly on the ground.
- Turn ratchet wrench (3) until the tyre is raised a maximum of 3 cm from the ground.
- Loosen and remove the wheel (⟶ page 665).

Removing a wheel

Requirements:

- The vehicle is raised (⟶ page 663).

During wheel change, avoid applying any force to the brake discs, since this could impair the level of comfort when braking.

NOTE
Damage to threading from dirt on wheel bolts

- Do not place wheel bolts in sand or on a dirty surface.

- Unscrew the uppermost wheel bolt completely.

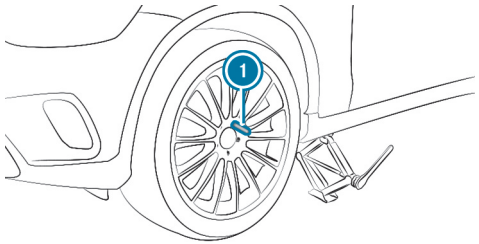

- Screw centring pin (1) into the thread instead of the wheel bolt.
- Unscrew the remaining wheel bolts completely.
- Remove the wheel.

Fitting a new wheel

Requirements:

- The wheel to be changed is removed and the centring pin is screwed in (⟶ page 665).

WARNING
Risk of accident from losing a wheel

Oiled or greased wheel bolts can cause the wheel bolts to come loose, as too can damaged wheel bolts or wheel hub threads.

- Never oil or grease the threads.
- In the event of damage to the threads, contact a qualified specialist workshop immediately.
- Have the damaged wheel bolts or damaged hub threads replaced.
- Do not continue driving.

- Observe the information on the choice of tyres (⟶ page 658).

For tyres with a specified running direction, an arrow on the side wall of the tyre indicates the correct running direction. Observe the direction of rotation when assembling.

NOTE
Damage to the wheels' plastic elements when changing a wheel

Plastic elements on wheels may be damaged when removing and repositioning the wheel.

- Do not raise the wheels by the plastic elements when removing and repositioning.

- Slide the wheel to be mounted onto the centring pin and push it on.

WARNING
Risk of injury from tightening wheel bolts and nuts

If you tighten the wheel bolts or wheel nuts when the vehicle is raised, the jack could tip.

- Only tighten wheel bolts or wheel nuts when the vehicle is on the ground.

- Observe the instructions and safety notes on "Wheel change" (⟶ page 658).
- For safety reasons, only use wheel bolts which have been approved for Mercedes-Benz and for the wheel in question.
- Tighten the wheel bolts evenly in a diagonal pattern in the order indicated until they are hand-tight.

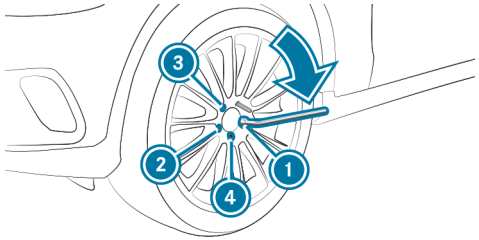

- Unscrew and remove the centring pin.
- Tighten the last wheel bolt until it is hand-tight.
- Lower the vehicle and tighten wheel bolts with the prescribed tightening torque (⟶ page 667).

Lowering the vehicle after a wheel change

Requirements:

- The new wheel has been fitted (⟶ page 665).

► **To lower the vehicle:** place the ratchet wrench onto the hexagon nut of the jack in such a way that the lettering "AB" is visible and turn it anti-clockwise.

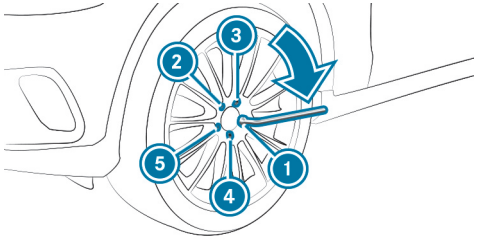

► Tighten the wheel bolts evenly in a diagonal pattern in the order indicated (1) to (5) with an initial maximum force of 80 Nm.

► Tighten the wheel bolts evenly in a diagonal pattern in the indicated order (1) to (5) with the specified tightening torque of 150 Nm.

⚠ WARNING
Risk of accident due to incorrect tightening torque

The wheels could come loose if the wheel bolts or wheel nuts are not tightened to the prescribed torque.

► Ensure that the wheel bolts or wheel nuts are tightened to the prescribed tightening torque.

► If you are not sure, do not move the vehicle. Contact a qualified specialist workshop and have the tightening torque checked immediately.

► Check the tyre pressure of the newly fitted wheel and adjust it if necessary.

ⓘ The following does not apply if the new wheel is an emergency spare wheel:

► **Vehicles with a tyre pressure monitoring system:** Restart the tyre pressure monitoring system (⟶ page 656).

Emergency spare wheel

Notes on the emergency spare wheel

WARNING
Risk of accident caused by incorrect wheel and tyre dimensions

The wheel or tyre size and the tyre type of the emergency spare wheel or spare wheel and the wheel to be replaced may differ. The emergency spare wheel or spare wheel can significantly impair driving characteristics of the vehicle.

To prevent hazardous situations:

- ► Drive carefully.
- ► Never fit more than one emergency spare wheel or spare wheel that differs in size.
- ► Only use an emergency spare wheel or spare wheel briefly.
- ► Do not deactivate ESP®.
- ► Have the emergency spare wheel or spare wheel of a different size replaced at the nearest qualified specialist workshop. The new wheel must have the correct dimensions.

FOLLOWING NOTES ON FITTING AN EMERGENCY SPARE WHEEL:

- The maximum permissible speed with an emergency spare wheel fitted is 80 km/h.
- Do not fit the emergency spare wheel with snow chains.
- Replace the emergency spare wheel after six years at the latest, regardless of wear.
- Use the included wheel bolts for the emergency spare wheel.
- Check the tyre pressure of the fitted emergency spare wheel and adjust it as necessary.

ⓘ The specified tyre pressure is stated on the label of the emergency spare wheel.

ⓘ **Vehicles with a tyre pressure monitoring system:** if an emergency spare wheel is fitted, the tyre pressure monitoring system cannot function reliably. For a few minutes after an emergency spare wheel is fitted, the system may still display the tyre pressure of the removed wheel. Only restart the system when the emergency spare wheel has been replaced with a new wheel.

ALSO TAKE NOTE OF THE FOLLOWING TOPICS:

- Notes on tyre pressure (⟶ page 654)
- Tyre pressure table (⟶ page 655)
- Notes on fitting tyres (⟶ page 658)
- Fitting an emergency spare wheel (⟶ page 663)

Back to Contents

Technical data

This interactive PDF works like a website – tap or click a button to jump straight to where you want to go.
You can return here at any time via the navigation bar at the top left.

Notes on technical data
On-board electronics
Regulatory radio information
Vehicle identification plate, VIN and motor number overview
Operating fluids
Vehicle data
Trailer hitch

Notes on technical data

The technical data was determined in accordance with EU Directives. The data stated only applies to vehicles with standard equipment. You can obtain further information from a Mercedes-Benz Service Centre.

Only for certain countries: you can find vehicle-specific vehicle data in the COC documents (CERTIFICATE OF CONFORMITY). These documents are supplied upon delivery of the vehicle.

On-board electronics

Notes on tampering with the drive system

NOTE
Premature wear due to improper maintenance

Improper maintenance can cause vehicle parts to wear out more quickly and can invalidate the vehicle operating permit.

► Only have the drive system and associated parts serviced at a qualified specialist workshop.

Two-way radios

NOTES ON INSTALLING TWO-WAY RADIOS

WARNING
Risk of accident due to improper work on two-way radios

If two-way radios are manipulated or retrofitted incorrectly, the electromagnetic radiation from the two-way radios can interfere with the vehicle electronics and jeopardise the operating safety of the vehicle.

► You should have all work on electrical and electronic components carried out at a qualified specialist workshop.

WARNING
Risk of accident due to improper operation of two-way radios

If you use two-way radios in the vehicle improperly, their electromagnetic radiation can disrupt the vehicle's electronics. This is the case in the following situations, in particular:

- The two-way radio is not connected to an exterior aerial.
- The exterior aerial is fitted incorrectly or is not a low-reflection aerial.

This could jeopardise the operating safety of the vehicle.

► Have the low-reflection exterior aerial fitted at a qualified specialist workshop.

► When operating two-way radios in the vehicle, always connect them to the low-reflection exterior aerial.

NOTE
Invalidation of the operating permit due to failure to comply with the instructions for installation and use

The operating permit may be invalidated if the instructions for installation and use of two-way radios are not observed.

- Only use approved frequency bands.
- Observe the maximum permissible output power in these frequency bands.
- Only use approved aerial positions.

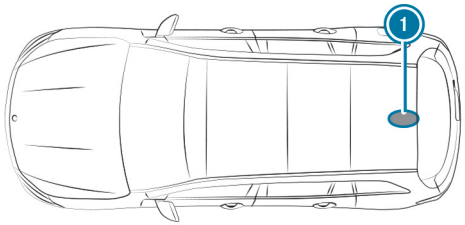

(1) Rear roof area

Fitting a roof aerial to vehicles with a panoramic sliding sunroof is not permitted.

Use Technical Specification ISO/TS 21609 (Road Vehicles – "EMCs for installation of aftermarket radio frequency transmitting equipment") when retrofitting two-way radios. Comply with the legal requirements for detachable parts.

If your vehicle is equipped with the pre-installation for a two-way radio, use the power supply and aerial connectors provided in the pre-installation. Observe the manufacturer's supplements when fitting.

MOBILE PHONE TRANSMISSION OUTPUT

The maximum transmission output (PEAK) at the base of the aerial must not exceed the values in the following table.

FREQUENCY BAND AND MAXIMUM TRANSMISSION OUTPUT

Frequency band	Maximum transmission output
2-m- frequency band 144 - 174 MHz	50 W
Terrestrial Trunked Radio (TETRA) 380 - 460 MHz	10 W
Mobile phone 2G	2 W
Mobile phone 3G/4G/5G	0.5 W

THE FOLLOWING CAN BE USED IN THE VEHICLE WITHOUT RESTRICTIONS:

- two-way radios with a maximum transmission output of up to 100 mW
- two-way radios with transmitter frequencies in the 380 -410 MHz frequency band and a maximum transmission output of up to 2 W (TETRA)
- mobile phones (2G/3G/4G/5G)

THERE ARE NO RESTRICTIONS WHEN POSITIONING THE AERIAL ON THE OUTSIDE OF THE VEHICLE FOR THE FOLLOWING FREQUENCY BANDS:

- Terrestrial Trunked Radio (TETRA)
- 2G/3G/4G/5G

Regulatory radio information

Specific information on wireless applications in accordance with 2014/53/EU

Besides the typical frequencies for mobile communication cars by Mercedes-Benz make use of the following automotive radio applications.

TYPE OF WIRELESS APPLICATIONS AND SPECIFICATIONS IN ACCORDANCE WITH 2014/53/EU

Technology	Frequency range	Transmission output/magnetic field strength
Remote Keyless Entry	20 kHz (9 – 90 kHz)	≤ 72 dBµA/m at 10m
Wireless Power Transmission	105 kHz (90 – 119 kHz)	≤ 42 dBµA/m at 10m
Remote Keyless Entry	120 kHz (119 – 135 kHz)	≤ 42 dBµA/m at 10m
Wireless Power Transmission	127 kHz (119 – 135 kHz)	≤ 66 dBµA/m at 10m with the magnetic field strength level decreasing 3dB/octave above 119 kHz
Near-field communication	13.553 – 13.567 MHz	≤ 42 dBµA/m at 10m
Remote Keyless Entry, Garage Door Opener, Tire Pressure Monitoring	433 MHz (433.05 – 434.79 MHz)	≤ 10 mW ERP
Block Heater Remote Control, Garage Door Opener	868 MHz (868.0 – 868.6 MHz)	≤ 25 mW ERP
Block Heater Remote Control, Garage Door Opener	869 MHz (868.7 – 869.2 MHz)	≤ 25 mW ERP
Bluetooth, Kleer, RLAN, wireless Headphones	2.4 GHz ISM band (2400 – 2483.5 MHz)	≤ 100 mW EIRP
RLAN	5.1 GHz UNII-1 (5150 – 5250 MHz)	≤ 40 mW EIRP

Technology	Frequency range	Transmission output/magnetic field strength
Interior Monitoring Radar, RLAN	5.8 GHz UNII-3 (5725 – 5875 MHz)	≤ 40 mW EIRP
Remote Keyless Entry	7.25 GHz UWB (6.0–8.5 GHz)	≤ -41.3 dBm/MHz EIRP mean ≤ 0 dBm/MHz EIRP peak
24 GHz radar	24 GHz ISM band (24.15 – 24.25 GHz)	≤ 100 mW EIRP
76 GHz radar	76 – 77 GHz	≤ 55 dBm peak EIRP
79 GHz radar	77 – 79 GHz	≤ 55 dBm peak EIRP
Compensator ECE DE003 and ECE DE004	GSM (E-GSM 900) GSM (E-GSM 1800)	< +33 dBm < +30 dBm
	UMTS (I, III, VIII)	< +23 dBm
	LTE (B1, B3, B7, B8, B20)	< +23 dBm
HERMES (Hardware for Enhanced Remote, Mobility & Emergency Services)	WLAN (2400-2483.5 MHz) WLAN (5736-5833 MHz)	< 20 dBm < 14 dBm
	GSM (E-GSM 900, Class 4) GSM (E-GSM 1800, Class 1) GSM (E-GSM 900 8-PSK, Class E2) GSM (E-GSM 1800 8-PSK, Class E2)	< +33 dBm (±2 dB) < +30 dBm (±2 dB) < +27 dBm (±3 dB) < +26 dBm (± 3 dB/-4 dB)
	UMTS (2100 WCDMA FDD B1, Class 3)	< +24 dBm (±1 dB/-3 dB)
	LTE (FDD B I, B III, B38, B39, B40, B41, Class 3)	< +23 dBm (±2 dB)
	GPS (1575.42 MHz +/- 2 MHz)	Receiving only
RAMSES (Router And Mobile SErviceS)	GSM (E-GSM 850 / E-GSM 900, Class 4) GSM (E-GSM 1800 / E-GSM 1900, Class 4)	< +32.5 dBm (±1 dB) < +29.5 dBm (±1 dB)
	UMTS (WCDMA FDD I, II, III, IV, V, VIII, XIX, Class 3)	< +23.5 dBm (±1 dB)

Technology	Frequency range	Transmission output/magnetic field strength
	LTE (FDD B1, B2, B3, B4, B5, B7, B8, B9, B18, B19, B21, B28, Class 3)	< +23 dBm (±1 dB)
	LTE (TDD B38, B40, B41, Class 3)	< +23 dBm (±1 dB)
	GNSS (1559 - 1610 MHz)	Receiving only

Further information and updates are available at the following web address:

https://regulatoryradioinformation.corpinter.net/en

Regulatory radio identifiers/specific notes

The tables and sections contain the following regulatory radio information:

- Manufacturer information
- Required regulatory radio identifiers, listed by country/region:
  - Manufacturer's specifications
  - Model designations
  - Radio equipment approval numbers
- Specific information on radio-based vehicle components

Further information and updates are available at the following website:

https://regulatoryradioinformation.corpinter.net/en

OVERVIEW OF MANUFACTURERS

Manufacturer	Manufacturer information
Continental ADC	Continental ADC Automotive Distance Control Systems GmbH, Peter-Dornier-Straße 10, 88131 Lindau, Germany
Bosch	Robert Bosch GmbH, Daimlerstraße 6, 71229 Leonberg, Germany
Bury	BURY SP. Z O.O., UL. WOJSKA POLSKIEGO 4, 39-300 Mielec, Poland
Continental Antenna	Continental Advanced Antenna GmbH, Römerring 1, 31137 Hildesheim, Germany
Continental Automotive	Continental Automotive GmbH, Siemensstraße 12, 93055 Regensburg, Germany
Continental Automotive France	Continental Automotive France SAS, 1 Avenue Paul Ourliac, 31100 Toulouse 1, France
Continental Automotive Hungary	Continental Automotive Hungary Kft., H-1106 Budapest, Napmátka u. 6., Hungary

Manufacturer	Manufacturer information
Continental Automotive Technologies	Continental Automotive Technologies GmbH, VDO-Straße 1, 64832 Babenhausen, Germany
Gentex	Gentex Corporation, 600 North Centennial Street, Zeeland MI 49464, USA
Harman Becker	Harman Becker Automotive Systems GmbH, Becker-Goehring-Straße 18, 76307 Karlsbad, Germany
HELLA	HELLA KGaA Hueck & Co., Rixbecker Straße 75, 59552 Lippstadt, Germany
Hirschmann	Hirschmann Car Communication GmbH, Stuttgarter Straße 45-51, 72654 Neckartenzlingen, Germany
Huf Baolong	Huf Baolong Electronics Bretten GmbH, Gewerbestraße 40, 75015 Bretten, Germany
HUF	HUF Hülsbeck & Fürst GmbH & Co. KG, Steeger Straße 17, 42551 Velbert, Germany
MARQUARDT	MARQUARDT GmbH, Schloßstraße 16, 78604 Rietheim-Weilheim, Germany
Meta System	Meta System S.P.A., Via T. Galimberti 5, 42124 Reggio Emilia, Italy
Molex	Molex CVS Dabendorf GmbH, Märkische Straße 72, 15806 Zossen, Germany
Molex Technologies	Molex Technologies GmbH, Mizarstraße 3, 12529 Schönefeld, Germany
Panasonic	Panasonic Automotive Systems Europe GmbH, Robert-Bosch-Straße 27, 63225 Langen, Germany
Schrader	Schrader Electronics Ltd., 11 Technology Park, Belfast Road, Antrim BT41 1QS, Northern Ireland, United Kingdom
Sennheiser	Sennheiser electronic GmbH & Co. KG, Am Labor 1, 30900 Wedemark, Germany
Valeo	Valeo Telematik und Akustik GmbH, Max-Planck-Straße 28-32, 61381 Friedrichsdorf Germany
Veoneer	Veoneer Sweden AB, Wallentinsvägen 22, 44737 Vårgårda, Sweden
Vitesco	Vitesco Technologies GmbH, Siemensstrasse 12, 93055 Regensburg Germany
WITTE-Velbert	WITTE-Velbert GmbH & Co. KG, Hoeferstr. 3-15, 42551 Velbert, Germany

ALGERIA

Agréé par l'ANF
Référence du Certificat de conformité

Homologué par l'ARPCE
Référence du Certificat de conformité

REGULATORY RADIO IDENTIFIERS

Manufacturer	Model designation	Radio equipment approval number
Continental Antenna	RKE223GNS (locking system)	71/H/ANF/2021
Continental Automotive	CMKG1 (locking system)	122/H/ANF/2021
Continental Automotive	CMKG2 (locking system)	136/H/ANF/2023
Continental Automotive	MARS Keyless (locking system)	168/H/ANF/2024
HELLA	DM4 (locking system)	123/H/ANF/2021
Hirschmann	920287A (locking system)	106/H/ANF/2020
Hirschmann	920287B (locking system)	107/H/ANF/2020
Hirschmann	920702A (locking system)	133/H/ANF/2022
Huf Baolong	TSSRE4A (tyre pressure sensor)	198/H/ANF/2021
HUF	HUF13145 (locking system)	105/H/ANF/2022
MARQUARDT	DC12A (locking system)	188/H/ANF/2021
MARQUARDT	DC12B (locking system)	189/H/ANF/2021
MARQUARDT	DC12K (locking system)	190/H/ANF/2021
MARQUARDT	MS5 (locking system)	195/H/ANF/2021
MARQUARDT	MS7 (locking system)	146/H/ANF/2024
MARQUARDT	MK1 (locking system)	193/H/ANF/2021
MARQUARDT	MK2 (locking system)	194/H/ANF/2021
MARQUARDT	MK3 (locking system)	300/H/ANF/2024
MARQUARDT	3350.38 (locking system)	186/H/ANF/2021
Schrader	AG5SP4 (tyre pressure sensor)	3681/1-73.OA 1639/DT/DG/ARPT/15
Schrader	AG3PF4 (tyre pressure sensor)	652/1/DT/DG/ARPCE/2020
Schrader	BG3FP4 (tyre pressure sensor)	56/H/ANF/2021
Schrader	GG4T (tyre pressure sensor)	3994/1.69-DA/2098/DT/DG/ARPT/17
Schrader	DG6W2D4 (tyre pressure sensor)	2695/1-NO.431396/DT/DG/ARPT/17
WITTE-Velbert	SDHTAG3NFC (locking system)	32/H/ANF/2021

ARGENTINA

REGULATORY RADIO IDENTIFIERS

Manufacturer	Model designation	Radio equipment approval number
Continental ADC	ARS4-A (radar sensor)	C-18005
Continental ADC	ARS6-A (radar sensor)	H-28818
Continental ADC	ARS441DP10 (radar sensor)	C-2377
Continental Antenna	RKE213E1 (aerial amplifier)	H-26206
Continental Antenna	RKE223E1 (aerial amplifier)	H-24637
Continental Automotive	CMKG1 (locking system)	H-24376
Continental Automotive	CMKG2 (locking system)	H-28998
Continental Automotive	MARS Keyless (locking system)	H-17929
Continental Automotive	D-WMI2020A (control unit)	H-23974
Continental Automotive Technologies	NTG7Q MID LF2 (head unit)	C-29127
Continental Automotive Technologies	NTG7Q HIGH LF2 (head unit)	C-29126
Continental Automotive Technologies	NTG7Q PREMIUM LF2 (head unit)	C-29128
Continental Automotive Technologies	NTG7Q PREMIUMPLUS LF2 (head unit)	C-29930
HELLA	DM4 (locking system)	H-17845
Hirschmann	920287A (locking system)	H-15694
Hirschmann	920287B (locking system)	H-15695
Hirschmann	920702A (locking system)	H-28310
Huf Baolong	TSSRE4A (tyre pressure sensor)	H-27592
HUF	HUF13482 (locking system)	H-31125
HUF	HUF13145 (locking system)	H-28067
HUF	HUF14632 (locking system)	H-15541
HUF	HUF4761 (locking system)	H-11545
MARQUARDT	DC12A (locking system)	H-17689
MARQUARDT	DC12B (locking system)	H-21034
MARQUARDT	DC12K (locking system)	H-21035
MARQUARDT	MS2 (locking system)	H-17598
MARQUARDT	MS4 (locking system)	H-23101
MARQUARDT	MS5 (locking system)	H-24933
MARQUARDT	MS6 (locking system)	H-30441
MARQUARDT	MS7 (locking system)	H-29810
MARQUARDT	MK1 (locking system)	H-17213

Manufacturer	Model designation	Radio equipment approval number
MARQUARDT	MK2 (locking system)	H-17212
MARQUARDT	MK3 (locking system)	H-30378
MARQUARDT	3350.38 (locking system)	H-23166
MARQUARDT	MU3 (locking system)	H-30159
MARQUARDT	MUB1 (locking system)	H-30622
Schrader	AG5SP4 (tyre pressure sensor)	H-4788
Schrader	AG3PF4 (tyre pressure sensor)	H-23292
Schrader	BG3FP4 (tyre pressure sensor)	H-25586
Schrader	GG4T (tyre pressure sensor)	H-20495
Schrader	DG6W2D4 (tyre pressure sensor)	H-20959
Vitesco	HFA30 (Handsfree-Access)	H-30148
WITTE-Velbert	SDHTAG3NFC (locking system)	H-24664

AUSTRALIA

REGULATORY RADIO IDENTIFIERS

Manufacturer	Model designation
Continental ADC	ARS4-A (radar sensor)
Continental ADC	ARS6-A (radar sensor)
Continental ADC	ARS4-C (radar sensor)
Continental ADC	ARS441DP10 (radar sensor)
Bosch	MRR1Rear (radar sensor)
Bosch	MRRe14FCR (radar sensor)
Bosch	F5CP12 (radar sensor)
Continental Antenna	RKE213E1 (aerial amplifier)
Continental Antenna	RKE223E1 (aerial amplifier)
Continental Automotive	CMKG1 (locking system)
Continental Automotive	CMKG2 (locking system)
Continental Automotive	MARS Keyless (locking system)
Continental Automotive Technologies	NTG7Q MID LF2 (head unit)
Continental Automotive Technologies	NTG7Q HIGH LF2 (head unit)
Continental Automotive Technologies	NTG7Q PREMIUM LF2 (head unit)
Hirschmann	920287A (locking system)
Hirschmann	920287B (locking system)

Manufacturer	Model designation
Hirschmann	920702A (locking system)
Huf Baolong	TSSRE4A (tyre pressure sensor)
HUF	HUF13145 (locking system)
MARQUARDT	MS6 (locking system)
MARQUARDT	MS7 (locking system)
MARQUARDT	MK1 (locking system)
MARQUARDT	MK2 (locking system)
MARQUARDT	MK3 (locking system)
MARQUARDT	3350.38 (locking system)
MARQUARDT	MU3 (locking system)
MARQUARDT	MUB1 (locking system)
Schrader	AG5SP4 (tyre pressure sensor)
Schrader	AG3PF4 (tyre pressure sensor)
Schrader	BG3FP4 (tyre pressure sensor)
Schrader	GG4T (tyre pressure sensor)
Schrader	DG6W2D4 (tyre pressure sensor)
Veoneer	77V12BSM (radar sensor)
Veoneer	77V12CRN (radar sensor)

Manufacturer	Model designation
Veoneer	77V125CRN (radar sensor)
Veoneer	MMRV1 (radar sensor)

BAHAMAS

REGULATORY RADIO IDENTIFIERS

Manufacturer	Model designation	Radio equipment approval number
Continental ADC	ARS4-A (radar sensor)	URCA_TA_2014_082
Continental ADC	ARS6-A (radar sensor)	URCA_TA_2023_211
Continental ADC	ARS4-C (radar sensor)	URCA_TA_2019_167
Bosch	MRR1Rear (radar sensor)	URCA_TA/2017_184
Bosch	MRRe14FCR (radar sensor)	URCA_TA/2017_157
Bosch	FR5CPCCF (radar sensor)	URCA_TA_2019_195
Bosch	F5CP12 (radar sensor)	URCA_TA_2022_077
Continental Automotive	CMKG1 (locking system)	URCA_TA/2020_068
Continental Automotive	CMKG2 (locking system)	URCA_TA/2023_028
Continental Automotive	MARS Keyless (locking system)	URCA_TA/2017_119
Continental Antenna	RKE213E1 (aerial amplifier)	UCRA_TA/2016_009
Continental Antenna	RKE223E1GNS (aerial amplifier)	UCRA_TA/2020_032

Manufacturer	Model designation	Radio equipment approval number
HELLA	DM4 (locking system)	URCA_TA/2017_078
HELLA	RS6 (locking system)	URCA_TA_2023_174
Hirschmann	920287A (locking system)	URCA_TA/2019_053
Hirschmann	920287B (locking system)	URCA_TA/2019_052
Hirschmann	920702A (locking system)	URCA_TA/2022_043
HUF	HUF13145 (locking system)	URCA_TA_2022_057
HUF	HUF14632 (locking system)	URCA_TA/2015_087
HUF	HUF4761 (locking system)	URCA_TA/2015_087
Huf Baolong	TSSRE4A (tyre pressure sensor)	URCA_TA/2017_094
MARQUARDT	DC12A (locking system)	URCA_TA_2017_042
MARQUARDT	DC12B (locking system)	URCA_TA_2019_128
MARQUARDT	DC12K (locking system)	URCA_TA_2019_129
MARQUARDT	MS2 (locking system)	URCA_TA/2017_021
MARQUARDT	MS4 (locking system)	URCA_TA_2019_141
MARQUARDT	MS5 (locking system)	URCA_TA_2020_141
MARQUARDT	MS6 (locking system)	URCA_TA_2024-035
MARQUARDT	MS7 (locking system)	URCA_TA_2024-066
MARQUARDT	MK1 (locking system)	URCA_TA/2015_031
MARQUARDT	MK2 (locking system)	URCA_TA/2015_033
MARQUARDT	MK3 (locking system)	URCA_TA_2024_025
MARQUARDT	3350.38 (locking system)	URCA_TA/2019_250
MARQUARDT	MU3 (locking system)	URCA_TA/2023_245
MARQUARDT	MUB1 (locking system)	URCA_TA/2024_060
Schrader	AG5SP4 (tyre pressure sensor)	URCA_TA_TA/2015_009
Schrader	AG3PF4 (tyre pressure sensor)	URCA_TA_2019_101
Schrader	BG3FP4 (tyre pressure sensor)	URCA_TA_2021_001
Schrader	GG4T (tyre pressure sensor)	URCA_TA_2020_046
Schrader	DG6W2D4 (tyre pressure sensor)	URCA_TA_2019_247
Valeo	ARTEMIS-SUB-01 (locking system)	URCA_TA_2024_056
Veoneer	77V12BSM (radar sensor)	URCA_TA_2019_169
Veoneer	77V12CRN (radar sensor)	URCA_TA_2019_168
Veoneer	77V125CRN (radar sensor)	URCA_TA_2021_027
Veoneer	MMRV1 (radar sensor)	URCA_TA/2015_063
Vitesco Technologies	HFA30 (Handsfree-Access)	URCA_TA_2023_247
WITTE-Velbert	SDHTAG3NFC (locking system)	URCA_TA_2020_056

BELARUS

REGULATORY RADIO IDENTIFIERS

Manufacturer	Model designation
Continental ADC	ARS4-A (radar sensor)
Continental ADC	ARS4-C (radar sensor)
Bosch	MRR1Rear (radar sensor)
Bosch	MRRe14FCR (radar sensor)
Bosch	FR5CPCCF (radar sensor)
Bosch	F5CP12 (radar sensor)
Continental Antenna	RKE213E1 (aerial amplifier)
Continental Antenna	RKE223E1GNS (aerial amplifier)
Continental Automotive	CMKG1 (locking system)
Continental Automotive	CMKG2 (locking system)
Continental Automotive	MARS Keyless (locking system)
Harman Becker	HERMES 3.0 (communication module)
HELLA	DM4 (locking system)
HUF	HUF13145 (locking system)
MARQUARDT	DC12A (locking system)
MARQUARDT	DC12B (locking system)
MARQUARDT	DC12K (locking system)

Manufacturer	Model designation
MARQUARDT	MS2 (locking system)
MARQUARDT	MS4 (locking system)
MARQUARDT	MS5 (locking system)
MARQUARDT	MS7 (locking system)
MARQUARDT	MK1 (locking system)
MARQUARDT	MK2 (locking system)
MARQUARDT	MK3 (locking system)
MARQUARDT	3350.38 (locking system)
MARQUARDT	MU3 (locking system)
MARQUARDT	MUB1 (locking system)
Veoneer	77V12BSM (radar sensor)
Veoneer	77V12CRN (radar sensor)
Veoneer	77V125CRN (radar sensor)
Veoneer	MMRV1 (radar sensor)
WITTE-Velbert	SDHTAG3NFC (locking system)

BOTSWANA

REGULATORY RADIO IDENTIFIERS

Manufacturer	Model designation	Radio equipment approval number
Continental ADC	ARS4-A (radar sensor)	BOCRA/TA/2018/2026
Continental ADC	ARS6-A (radar sensor)	BOCRA/TA/2022/7599
Continental ADC	ARS4-C (radar sensor)	BOCRA/TA/2020/5186
Bosch	MRRe14FCR (radar sensor)	BOCRA/TA/2019/4674
Bosch	FR5CPCCF (radar sensor)	BOCRA/TA/2019/4975
Bosch	MRR1Rear (radar sensor)	BOCRA/TA/2017/3788
Bosch	F5CP12 (radar sensor)	BOCRA/TA/2022/7110
Continental Antenna	RKE213E1 (aerial amplifier)	BOCRA/TA/2019/4387
Continental Antenna	RKE223E1GNS (aerial amplifier)	BOCRA/TA/2019/5050
Continental Automotive	CMKG1 (locking system)	BOCRA/TA/2019/5075
Continental Automotive	CMKG2 (locking system)	BOCRA/TA/2023/8144
Continental Automotive	MARS Keyless (locking system)	BOCRA/TA/2019/4661
HELLA	DM4 (locking system)	BOCRA/TA/2019/4662
HELLA	RS6 (locking system)	BOCRA/TA/2023/8610
Hirschmann	920287A (locking system)	BOCRA/TA/2019/4724
Hirschmann	920287B (locking system)	BOCRA/TA/2019/4723
Hirschmann	920702A (locking system)	BOCRA/TA/2022/7099
HUF	HUF13145 (locking system)	HUF13145
HUF	HUF4761 (locking system)	BOCRA/TA/2019/4664
MARQUARDT	DC12A (locking system)	BOCRA/TA/2019/4389
MARQUARDT	DC12B (locking system)	BOCRA/TA/2019/4388
MARQUARDT	DC12K (locking system)	BOCRA/TA/2019/4390
MARQUARDT	MS2 (locking system)	BOCRA/TA/2019/5135
MARQUARDT	MS4 (locking system)	BOCRA/TA/2019/4758
MARQUARDT	MS5 (locking system)	BOCRA/TA/2020/5473
MARQUARDT	MS6 (locking system)	BOCRA/TA/2024/259
MARQUARDT	MS7 (locking system)	BOCRA/TA/2024/374
MARQUARDT	MK1 (locking system)	BOCRA/TA/2019/4359
MARQUARDT	MK2 (locking system)	BOCRA/TA/2019/4360
MARQUARDT	MK3 (locking system)	BOCRA/TA/2024/373
MARQUARDT	3350.38 (locking system)	BOCRA/TA/2019/4687
MARQUARDT	MU3 (locking system)	BOCRA/TA/2023/8771
MARQUARDT	MUB1 (locking system)	BOCRA/TA/2024/386
Veoneer	77V12BSM (radar sensor)	BOCRA/TA/2019/4975
Veoneer	77V12CRN (radar sensor)	BOCRA/TA/2019/4980

Manufacturer	Model designation	Radio equipment approval number
Veoneer	77V125CRN (radar sensor)	BOCRA/TA/2021/6191
WITTE-Velbert	SDHTAG3NFC (locking system)	BOCRA/TA/2020/5342

BRAZIL

Information on two-way radio systems in the vehicle:

These systems are not protected against harmful interference and must not cause interference in properly approved systems.

REGULATORY RADIO IDENTIFIERS

Manufacturer	Model designation	Radio equipment approval number
Continental ADC	ARS4-A (radar sensor)	02217-14-06068
Continental ADC	ARS441DP10 (radar sensor)	06783-19-02496
Bury	A167 820 19 03 /A247 820 84 02 (mobile phone charger)	20280-23-04457
Bury	A247 820 86 02 (mobile phone charger)	20288-23-04457
Bury	A174 820 42 00 (USB-C charger)	07785-24-04457
Continental Antenna	RKE223E1 (aerial amplifier)	03691-15-05298
Continental Antenna	RKE213E1 (aerial amplifier)	07359-21-12817
Continental Antenna	RKE213E1 (aerial amplifier)	3691-15-5298

Manufacturer	Model designation	Radio equipment approval number
Continental Automotive	CMKG1 (locking system)	00325-20-02149
Continental Automotive	CMKG2 (locking system)	01334-23-02149
Continental Automotive	MARS Keyless (locking system)	03189-17-02856
Continental Automotive Technologies	NTG7Q MID LF2 (head unit)	12520-23-06353
Continental Automotive Technologies	NTG7Q HIGH LF2 (head unit)	12525-23-06353
Continental Automotive Technologies	NTG7Q PREMIUM LF2 (head unit)	12522-23-06353
Continental Automotive Technologies	NTG7Q PREMIUMPLUS LF2 (head unit)	17830-23-06353
HELLA	DM4 (locking system)	04689-17-05364
Hirschmann	920287A (locking system)	1855-12-5762
Hirschmann	920287B (locking system)	1787-12-8058
Huf Baolong	TSSRE4A (tyre pressure sensor)	08539-19-03616
HUF	HUF13482 (locking system)	07889-24-06643
HUF	HUF13145 (locking system)	HUF13145
HUF	HUF14632 (locking system)	03627-15-06643
HUF	HUF4761 (locking system)	00053-13-06643

Manufacturer	Model designation	Radio equipment approval number
MARQUARDT	DC12A (locking system)	01333-17-02930
MARQUARDT	DC12B (locking system)	01395-11-02930
MARQUARDT	DC12K (locking system)	01392-11-02930
MARQUARDT	MS2 (locking system)	00616-17-02930
MARQUARDT	MS4 (locking system)	06218-19-02930
MARQUARDT	MS5 (locking system)	11149-20-02930
MARQUARDT	MS6 (locking system)	02565-24-02930
MARQUARDT	MS7 (locking system)	05883-24-02930
MARQUARDT	3350.38 (locking system)	03149-19-02930
MARQUARDT	MK1 (locking system)	03756-15-02930
MARQUARDT	MK2 (locking system)	03757-15-02930
MARQUARDT	MK3 (locking system)	06050-24-02930
MARQUARDT	MU3 (locking system)	05884-24-02930
MARQUARDT	MUB1 (locking system)	05886-24-02930
Molex Technologies	HUB-8 (mobile phone charger)	19286-23-12116
Molex Technologies	HUB-9d / HUB-9e (mobile phone charger)	19287-23-12116
Vitesco Technologies	HFA30 (Handsfree-Access)	18924-23-15869
WITTE-Velbert	SDHTAG3NFC (locking system)	03034-20-07018

Additional specific information

Rear Seat Entertainment System:

This system is not protected against harmful interference and must not cause interference in properly approved systems.

This product is approved by ANATEL in accordance with the procedures set out in Resolution 242/2000 and complies with the relevant technical requirements. You will find additional information on the ANATEL website https://www.anatel.gov.br

Charging unit for the wireless charging of mobile communication devices (WMI):

This device operates in secondary mode, which means it has no protection against harmful interference, not even from stations of the same type, and must not cause interference with systems operating on a primary basis.

This product is approved in accordance with the procedures defined in Directive 242/2000 by the Brazilian telecommunications agency ANATEL and complies with the applicable technical requirements.

Additional information can be found on the ANATEL website www.anatel.gov.br.

Telecommunications products:

This product has been approved by Anatel in accordance with the procedures stipulated in Resolution No. 715/2020, and satisfies all applied technical requirements.

Additional information can be found on the ANATEL website www.anatel.gov.br.

BRUNEI DARUSSALAM

REGULATORY RADIO IDENTIFIERS

Manufacturer	Model designation	Radio equipment approval number
Continental ADC	ARS4-C (radar sensor)	DTA-004005
Continental ADC	ARS6-A (radar sensor)	DTA-020359
Bosch	FR5CPCCF (radar sensor)	DTA-004222
Bosch	LRR3 (radar sensor)	DTA-011039
Bosch	MRR1Rear (radar sensor)	DTA-006601
Bosch	MRRe14FCR (radar sensor)	DTA-006678
Bosch	F5CP12 (radar sensor)	DTA-018042
Continental Antenna	RKE213E1 (aerial amplifier)	DTA-006665
Continental Antenna	RKE223E1GNS (aerial amplifier)	DTA-004998
Continental Automotive	CMKG1 (locking system)	DTA-005043
Continental Automotive	CMKG2 (locking system)	DTA-023993
Continental Automotive	MARS Keyless (locking system)	DTA-017264
HELLA	DM4 (locking system)	DTA-020187
HELLA	RS6 (locking system)	AA-000081
Hirschmann	920287A (locking system)	DTA-001661
Hirschmann	920287B (locking system)	DTA-000794
Hirschmann	920702A (locking system)	DTA-018051
Huf Baolong	TSSRE4A (tyre pressure sensor)	DTA-011045
Huf Baolong	TSSSG4G6b (tyre pressure monitoring system control unit)	DTA-003757
HUF	HUF13145 (locking system)	DTA-017926
HUF	HUF14632 (locking system)	DTA-006138
HUF	HUF4761 (locking system)	DTA-000615
MARQUARDT	DC12A (locking system)	DTA-019403
MARQUARDT	DC12B (locking system)	DTA-000068
MARQUARDT	DC12K (locking system)	DTA-000066
MARQUARDT	MS2 (locking system)	LPD-38890
MARQUARDT	MS4 (locking system)	DTA-003525

Manufacturer	Model designation	Radio equipment approval number
MARQUARDT	MS5 (locking system)	DTA-005850
MARQUARDT	MS7 (locking system)	DTA-032943
MARQUARDT	MK1 (locking system)	DTA-011312
MARQUARDT	MK2 (locking system)	DTA-011313
MARQUARDT	MK3 (locking system)	DTA-031059
MARQUARDT	3350.38 (locking system)	DTA-032673
MARQUARDT	MU3 (locking system)	DTA-029861
MARQUARDT	MUB1 (locking system)	DTA-032674
Schrader	AG5SP4 (tyre pressure sensor)	DTA-005291
Schrader	AG3PF4 (tyre pressure sensor)	DTA-003581
Schrader	BG3FP4 (tyre pressure sensor)	DRQ-D-JATI-07-2000-109000
Schrader	DG6W2D4 (tyre pressure sensor)	DTA-025258
Schrader	GG4T (tyre pressure sensor)	DTA-025258
Schrader	BG3FP4 (tyre pressure sensor)	DTA-025258
Schrader	MFR (tyre pressure monitoring system control unit)	DTA-003893
Schrader	MFR3 (tyre pressure monitoring system control unit)	DRQ-D-MAJU-02-2011-111083

Manufacturer	Model designation	Radio equipment approval number
Valeo	ARTEMIS-SUB-01 (locking system)	DTA-031587
Veoneer	77V12BSM (radar sensor)	DTA-004000
Veoneer	77V12CRN (radar sensor)	DTA-003999
Veoneer	77V125CRN (radar sensor)	DTA-010423
Veoneer	77GHz MMRV1 (radar sensor)	DTA-006216
Vitesco Technologies	HFA30 (Handsfree-Access)	DTA-030296
WITTE-Velbert	SDHTAG3NFC (locking system)	DTA-005628

EURASIAN ECONOMIC UNION

REGULATORY RADIO IDENTIFIERS

Manufacturer	Model designation
Continental ADC	ARS4-A (radar sensor)
Continental ADC	ARS4-C (radar sensor)
Continental ADC	ARS6-A (radar sensor)
Continental ADC	ARS441DP10 (radar sensor)
Bosch	FR5CPCCF (radar sensor)
Bosch	LRR3 (radar sensor)

Manufacturer	Model designation
Bosch	MRR1Rear (radar sensor)
Bosch	MRRe14FCR (radar sensor)
Bosch	F5CP12 (radar sensor)
Continental Antenna	RKE213E1 (aerial amplifier)
Continental Antenna	RKE223E1GNS (aerial amplifier)
Continental Automotive	MARS Keyless (locking system)
Continental Automotive	CMKG1 (locking system)
Continental Automotive	CMKG2 (locking system)
HELLA	DM4 (locking system)
Hirschmann	920287A (locking system)
Hirschmann	920287B (locking system)
Hirschmann	920702A (locking system)
Huf Baolong	TSSRE4A (tyre pressure sensor)
HUF	HUF13145 (locking system)
HUF	HUF4761 (locking system)
HUF	HUF14632 (locking system)
HUF	HUF13482 (locking system)
MARQUARDT	DC12A (locking system)

Manufacturer	Model designation
MARQUARDT	DC12B (locking system)
MARQUARDT	DC12K (locking system)
MARQUARDT	MS2 (locking system)
MARQUARDT	MS4 (locking system)
MARQUARDT	MS5 (locking system)
MARQUARDT	MS6 (locking system)
MARQUARDT	MS7 (locking system)
MARQUARDT	MK1 (locking system)
MARQUARDT	MK2 (locking system)
MARQUARDT	MK3 (locking system)
MARQUARDT	3350.38 (locking system)
MARQUARDT	MU3 (locking system)
MARQUARDT	MUB1 (locking system)
Schrader	AG5SP4 (tyre pressure sensor)
Schrader	AG3PF4 (tyre pressure sensor)
Schrader	BG3FP4 (tyre pressure sensor)
Schrader	GG4T (tyre pressure sensor)
Schrader	DG6W2D4 (tyre pressure sensor)

EAC	EAC
Manufacturer	**Model designation**
Valeo	ARTEMIS-SUB-01 (locking system)
Veoneer	77GHz MMRV1 (radar sensor)
Veoneer	77V12BSM (radar sensor)
Veoneer	77V12CRN (radar sensor)
Veoneer	77V125CRN (radar sensor)
WITTE-Velbert	SDHTAG3NFC (locking system)

GHANA

REGULATORY RADIO IDENTIFIERS

Manufacturer	Model designation	Radio equipment approval number
		NCA APPROVED
Continental ADC	ARS4-C (radar sensor)	ZRO-1H-7E3-152
Continental ADC	ARS6-A (radar sensor)	7E6-M1-16C-SRD
Continental ADC	ARS441DP10 (radar sensor)	ZRO-1H-7E3-152
Bosch	FR5CPCCF (radar sensor)	ZRO-M8-7E3-230
Bosch	F5CP12 (radar sensor)	7E6-M1-X9B-SRD
Continental Antenna	RKE213E1 (aerial amplifier)	ZRO-M8-7E3-X53
Continental Antenna	RKE223E1GNS (aerial amplifier)	ZRO-M8-7E3-225
Continental Automotive	CMKG1 (locking system)	ZRO-M8-7E3-277
Continental Automotive	CMKG2 (locking system)	7M-7E7-X25-DSR
Continental Automotive	MARS Keyless (locking system)	BR3-1M-GE2-16A
Continental Automotive Technologies	NTG7Q MID LF2 (head unit)	7M-7E7-X09-DSR
Continental Automotive Technologies	NTG7Q HIGH LF2 (head unit)	7M-7E7-X05-DSR
Continental Automotive Technologies	NTG7Q PREMIUM LF2 (head unit)	7M-7E7-X03-DSR
HELLA	DM4 (locking system)	BR3-1M-GE2-157
Hirschmann	920287A (locking system)	ZRO-M8-7E3-X45
Hirschmann	920287B (locking system)	ZRO-M8-7E3-X47
HUF	HUF13145 (locking system)	7E6-M1-X14-SRD
HUF	HUF4761 (locking system)	EX6-6M-GE2-16C
MARQUARDT	DC12A (locking system)	ZRO-M8-7E3-X50
MARQUARDT	DC12B (locking system)	ZRO-M8-7E3-X51
MARQUARDT	DC12K (locking system)	ZRO-M8-7E3-X52
MARQUARDT	MS2 (locking system)	BR3-1M-GE-129
MARQUARDT	MS4 (locking system)	ZRO-1H-7E3-26E
MARQUARDT	MS5 (locking system)	SRO-1M-7E4-11B

Manufacturer	Model designation	Radio equipment approval number
MARQUARDT	MS6 (locking system)	M1-7E8-X42-SRH
MARQUARDT	MS7 (locking system)	M1-7E8-X9F-SRH
MARQUARDT	MK1 (locking system)	ZRO-M8-7E3-X4A
MARQUARDT	MK2 (locking system)	ZRO-M8-7E3-X4C
MARQUARDT	MK3 (locking system)	HS-7E7-262-DSR
MARQUARDT	MU3 (locking system)	HS-7E7-XE5-DSR
MARQUARDT	MUB1 (locking system)	M1-7E8-X9D-SRH
MARQUARDT	3350.38 (locking system)	ZRO-M8-7E3-X3C
MARQUARDT	MU3 (locking system)	HS-7E7-XE5-DSR
Valeo	ARTEMIS-SUB-01 (locking system)	7M-7E7-272-DSR
Veoneer	77V12BSM (radar sensor)	ZRO-1H-7E3-142
Veoneer	77V12CRN (radar sensor)	ZRO-M8-7E3-230
Veoneer	77V125CRN (radar sensor)	7E5-7M-X72-RDR
Vitesco Technologies	HFA30 (Handsfree-Access)	7M-7E7-134-DSR
WITTE-Velbert	SDHTAG3NFC (locking system)	SRO-1M-7E4-X59

INDONESIA

⚠ Dilarang melakukan perubahan spesifikasi yang dapat menimbulkan gangguan fisik dan/atau elektromagnetik terhadap lingkungan sekitarnya

REGULATORY RADIO IDENTIFIERS

Manufacturer	Model designation	Radio equipment approval number
Bury	MB-WMI2024 (control unit)	100200/SDPPI/2024 7163
Continental ADC	ARS3-A (radar sensor)	97128/SDPPI/2024 7163
Continental ADC	ARS3-B (radar sensor)	97129/SDPPI/2024 7163
Continental ADC	ARS4-B (radar sensor)	97127/ SDPPI/ 2024 7163
Continental ADC	ARS4-C (radar sensor)	68676/SDPPI/2020 7163
Continental ADC	ARS4-A (radar sensor)	90362/SDPPI/2023 7163
Continental ADC	ARS6-A (radar sensor)	84770/SDPPI/2022 7163

Manufacturer	Model designation	Radio equipment approval number
Continental ADC	ARS441DP10 (radar sensor)	89748/SDPPI/2023 7163
Bosch	LRR3 (radar sensor)	74264/SDPPI/2021 7163
Bosch	MRR1Rear (radar sensor)	74267/SDPPI/2021 7163
Bosch	MRRevo14F (radar sensor)	74265/SDPPI/2021 7163
Bosch	MRRe14FCR (radar sensor)	74266/SDPPI/2021 7163
Bosch	FR5CPCCF (radar sensor)	67882/SDPPI/2020 7163
Bosch	F5CP12 (radar sensor)	86858/SDPPI/2022 84754

Manufacturer	Model designation	Radio equipment approval number
Continental Antenna	RKE213E1 (aerial amplifier)	103697/SDPPI/2024 7163
Continental Antenna	RKE223E1GNS (aerial amplifier)	86957/ SDPPI/ 2022 10325
Continental Automotive	CMKG1 (locking system)	87836/SDPPI/2023 7163
Continental Automotive	CMKG2 (locking system)	88721/SDPPI/2023 7163
Continental Automotive	MARS Keyless (locking system)	69379/SDPPI/2020 7163
Continental Automotive	CORTIS08 (tyre pressure monitoring system control unit)	97476//SDPPI/2024 7163
Continental Automotive	D-WMI2020A (control unit)	66678/SDPPI/2020 7163
Continental Automotive	NTG7 MID (Headunit) Production: Hungary	92192/SDPPI/2023 7163

Manufacturer	Model designation	Radio equipment approval number
Continental Automotive	NTG7 HIGH (Headunit) Production: Hungary	92190/SDPPI/2023 7163
Continental Automotive	NTG7 PREMIUM (Headunit) Production: Hungary	92188/SDPPI/2023 7163
Continental Automotive	NTG7 PREMIUM PLUS (Headunit) Production: Hungary	92195/SDPPI/2023 7163
Continental Automotive France	CORTIS08 (tyre pressure monitoring system control unit)	97476/SDPPI/2024 7163
Continental Automotive Technologies	NTG7Q MID LF2 (head unit)	88477/SDPPI/2023 7163
Continental Automotive Technologies	NTG7Q HIGH LF2 (head unit)	88579/SDPPI/2023 7163
Continental Automotive Technologies	NTG7Q PREMIUM LF2 (head unit)	88478/SDPPI/2023 7163
Harman Becker	NTG6N ENTRY/MID (Headunit) Production: Germany	64019/SDPPI/2019 7163
Harman Becker	NTG6N HIGH (Headunit) Production: Germany	64018/SDPPI/2019 7163
Harman Becker	NTG6N ENTRY/MID (Headunit) Production: Hungary	63775/SDPPI/2019 7163
Harman Becker	NTG6N HIGH (Headunit) Production: Hungary	63774/SDPPI/2019 7163
Harman Becker	NTG7 MID (Headunit)	65544/SDPPI/2020 7163
Harman Becker	NTG7 HIGH (Headunit)	70513/SDPPI/2020 7163
Harman Becker	NTG7 PREMIUM (Headunit)	65543/SDPPI/2020 7163
Harman Becker	NTG7 PREMIUM PLUS (Headunit)	70512/SDPPI/2020 7163
Harman Becker	NTG7 RSU (control unit)	66387/SDPPI/2020 7163
HELLA	DM4 (locking system)	69378/SDPPI/2020 7163
Huf Baolong	TSSRE4A (tyre pressure sensor)	72438/SDPPI/2021 7163

Manufacturer	Model designation	Radio equipment approval number
Hirschmann	920287A (locking system)	71369 /SDPPI/2020 7163
Hirschmann	920287B (locking system)	72974 /SDPPI/2021 7163
Hirschmann	920702A (locking system)	82675/SDPPI/2022 7163
HUF	HUF13482 (locking system)	104103/SDPPI/2024 7163
HUF	HUF14632 (locking system)	78368/SDPPI/2021 7163
HUF	HUF4761 (locking system)	26742/SDPPI/2015 3533
HUF	HUF13145 (NFC reader)	83988/SDPPI/2022

Manufacturer	Model designation	Radio equipment approval number
MARQUARDT	DC12A (locking system)	67373/SDPPI/2020 7163
MARQUARDT	DC12B (locking system)	80676/SDPPI/2022 7163
MARQUARDT	DC12K (locking system)	80621/SDPPI/2022 7163
MARQUARDT	MS2 (locking system)	67372/SDPPI/2020 7163
MARQUARDT	MS4 (locking system)	64126/SDPPI/2019 7163
MARQUARDT	MS5 (locking system)	90695/SDPPI/2023 7163 7163
MARQUARDT	MS6 (locking system)	102883/SDPPI/2024 7163 7163

Manufacturer	Model designation	Radio equipment approval number
MARQUARDT	MS7 (locking system)	102735/SDPPI/2024 7163 7163
MARQUARDT	MK1 (locking system)	100207/ SDPPI/ 2024 7163
MARQUARDT	MK2 (locking system)	100209/ SDPPI/ 2024 7163
MARQUARDT	MK3 (locking system)	102736/ SDPPI/ 2024 7163
MARQUARDT	3350.38 (locking system)	82980/SDPPI/2022 7163
Molex	WCH-302b (control unit)	71668/SDPPI/2020 7163
Molex	WCH-302d (control unit)	71220/SDPPI/2020 7163
Molex	WCH-302e (control unit)	71669/SDPPI/2020 7163

Manufacturer	Model designation	Radio equipment approval number
Panasonic	DAIRSE (control unit)	63550/SDPPI/2019
Schrader	GG4T (tyre pressure sensor)	72023/SDPPI/2020 9338
Schrader	AG5SP4 (tyre pressure sensor)	75465/SDPPI/2021 7163
Schrader	BG3FP4 (tyre pressure sensor)	72765/SDPP/2021 7163
Schrader	DG6W2D4 (tyre pressure sensor)	57058/SDPPI/2018 3612
Schrader	MC34MA4 (tyre pressure monitoring system control unit)	25626/SDPPI/2015 3612
Schrader	AG3PF4 (tyre pressure sensor)	62396/SDPPI/2020 7163
Schrader	GG4T (tyre pressure sensor)	72023/SDPPI/2020 7163

Manufacturer	Model designation	Radio equipment approval number
Veoneer	77GHz MMRV1 (radar sensor)	74749/SDPPI/2021 7163
Veoneer	77V12CRN (radar sensor)	66830/SDPPI/2020 7163
Veoneer	77V125CRN (radar sensor)	78366/SDPPI/2021 7163
Veoneer	77V12BSM (radar sensor)	66792/SDPPI/2020 7163
WITTE-Velbert	SDHTAG3NFC (locking system)	67233/SDPPI/2020 10325

ISRAEL

REGULATORY RADIO IDENTIFIERS

Manufacturer	Model designation	Radio equipment approval number
		Approval number of the Ministry of Communications:
Continental ADC	ARS4-A (radar sensor)	55-09697
Continental ADC	ARS6-A (radar sensor)	55-14225
Continental ADC	ARS4-C (radar sensor)	55-07525
Bosch	FR5CPCCF (radar sensor)	55-08783
Bosch	LRR3 (radar sensor)	55-08334
Bosch	MRR1Rear (radar sensor)	55-08333
Bosch	MRRe14FCR (radar sensor)	55-08395
Bosch	F5CP12 (radar sensor)	55-12854
Bosch	MBCI2LS3PR1 (head unit)	51-91228
Bosch	MBCI2LS4PR1 (head unit)	51-91226
Continental Antenna	RKE213E1 (aerial amplifier)	55-13929
Continental Antenna	RKE223E1GNS (aerial amplifier)	51-97825
Continental Automotive	D-WMI2017B (control unit)	51-75654
Continental Automotive	D-WMI2017A (control unit)	51-75367
Continental Automotive	D-WMI2016A (control unit)	55-08177
Continental Automotive	D-WMI2020A (control unit)	55-08179
Continental Automotive	RKE213E1 (Antennenverstärker)	55-13929
Continental Automotive	RKE223E1GNS (Antennenverstärker)	51-97825
Continental Automotive	CMKG1 (Schließsystem)	51-87871

Manufacturer	Model designation	Radio equipment approval number
Continental Automotive	CMKG2 (Schließsystem)	51-92059
Continental Automotive	MARS Keyless (Schließsystem)	56-04831
Continental Automotive Technologies	NTG7Q MID LF2 (head unit)	51-90718
Continental Automotive Technologies	NTG7Q HIGH LF2 (head unit)	51-90717
Continental Automotive Technologies	NTG7Q PREMIUM LF2 (head unit)	51-90719
Harman Becker	NTG7 HIGH-IL (Headunit)	51-89476
Harman Becker	NTG7 PREMIUMPLUS-IL (Headunit)	51-89475
HELLA	DM4 (locking system)	55-14271
HELLA	RS6 (locking system)	51-98663
Hirschmann	920287A (locking system)	51-62759
Hirschmann	920287B (locking system)	51-49357
Hirschmann	920702A (locking system)	56-03806
Huf Baolong	TSSRE4A (tyre pressure sensor)	63-63571
Huf Baolong	TSSSG4G6b (tyre pressure monitoring system control unit)	63-66757

Manufacturer	Model designation	Radio equipment approval number
HUF	HUF13145 (locking system)	55-14153
MARQUARDT	DC12A (locking system)	55-13847
MARQUARDT	DC12B (locking system)	55-12215
MARQUARDT	DC12K (locking system)	55-12214
MARQUARDT	MS2 (locking system)	51-85192
MARQUARDT	MS5 (locking system)	51-86840
MARQUARDT	MS6 (locking system)	56-03065
MARQUARDT	MS7 (locking system)	56-07888
MARQUARDT	3350.38 (locking system)	55-14331
MARQUARDT	MK1 (locking system)	51-94449
MARQUARDT	MK2 (locking system)	51-94450
MARQUARDT	MK3 (locking system)	56-03260
MARQUARDT	MU3 (locking system)	51-97974
MARQUARDT	MUB1 (locking system)	56-07889
Schrader	AG3PF4 (tyre pressure sensor)	51-78338
Schrader	AG5SP4 (tyre pressure sensor)	51-73152
Schrader	BG3FP4 (tyre pressure sensor)	51-77898
Schrader	DG6W2D4 (tyre pressure sensor)	51-64111

Manufacturer	Model designation	Radio equipment approval number
Schrader	GG4T (tyre pressure sensor)	55-09441
Schrader	MC34MA4 (tyre pressure monitoring system control unit)	51-29611
Schrader	MFR (tyre pressure monitoring system control unit)	55-06040
Schrader	MFR3 (tyre pressure monitoring system control unit)	51-79817
Veoneer	77V12BSM (radar sensor)	55-08176
Veoneer	77V12CRN (radar sensor)	55-08301
WITTE-Velbert	SDHTAG3NFC (locking system)	55-12216
Vitesco	HFA30 (Handsfree-Access)	56-01011

JAMAICA

REGULATORY RADIO IDENTIFIERS

Manufacturer	Model designation
	This product has been Type Approved by Jamaica:
Continental Automotive	CMKG1 (locking system)
Continental Automotive	CMKG2 (locking system) SMA – CMKG2
Continental Automotive	RKE213E1 (aerial amplifier)
Continental Automotive	RKE223E1GNS (aerial amplifier)

Manufacturer	Model designation
Continental Automotive	MARS Keyless (locking system)
Hirschmann	920287A (locking system)
Hirschmann	920287B (locking system)
Hirschmann	920702A (locking system)
HELLA	DM4 (locking system)
HUF	HUF13145 (locking system)
MARQUARDT	DC12A (locking system)
MARQUARDT	DC12B (locking system)
MARQUARDT	DC12K (locking system)
MARQUARDT	MS2 (locking system)
MARQUARDT	MS4 (locking system)
MARQUARDT	MS5 (locking system)
MARQUARDT	MS6 (locking system) SMA – MS6
MARQUARDT	MS7 (locking system) SMA – MS7
MARQUARDT	MK1 (locking system)
MARQUARDT	MK2 (locking system)
MARQUARDT	MK3 (locking system) SMA – MK3

Manufacturer	Model designation
MARQUARDT	MU3 (locking system) SMA – MU3
MARQUARDT	MUB1 (locking system) SMA – MUB1
MARQUARDT	3350.38 (locking system)
WITTE-Velbert	SDHTAG3NFC (locking system)
Valeo	ARTEMIS-SUB-01 (locking system) SMA – ARTEMIS-SUB-01
Vitesco	HFA30 (Handsfree-Access)

JAPAN

REGULATORY RADIO IDENTIFIERS

Manufacturer	Model designation	Radio equipment approval number
Continental Automotive	CMKG2 (locking system)	TMWK2211004648KR
Continental Automotive Technologies	NTG7Q HIGH LF2 (head unit)	003-230113
Continental Automotive Technologies	NTG7Q PREMIUM LF2 (head unit)	003-230112
MARQUARDT	MS6 (locking system)	204-A00043
Sennheiser	M3IETW2R (Earbud)	201-190814 (R)
Sennheiser	M3IETW2L (Earbud)	201-190815 (L)
Sennheiser	BTT100 (Bluetooth Audio Transmitter)	020-180077
Vitesco	HFA30 (Handsfree-Access)	209-J00495

Additional specific information

ARTEMIS and MB - 4G eCall Box:

This device has been approved in accordance with Japanese Radio Law and with Japanese Telecommunications Business Law.

This device may not undergo any modifications, otherwise the designation number assigned to this product will be rendered null and void.

JORDAN

REGULATORY RADIO IDENTIFIERS

Manufacturer	Model designation	Radio equipment approval number
Continental Antenna	RKE213E1 (aerial amplifier)	TRC/34/7421/2023
Continental Antenna	RKE223E1GNS (aerial amplifier)	TRC/36/7494/2020
Continental Automotive	CMKG1 (Schließsystem)	T/4/11/11/6775
Continental Automotive	CMKG2 (Schließsystem)	TRC/19/11374/2023

Manufacturer	Model designation	Radio equipment approval number
Continental Automotive	MARS Keyless (Schließsystem)	TRC/34/11448/2023
Gentex	MUAHL5 (convenience system)	T/4/11/11/8462
HELLA	DM4 (locking system)	T/4/11/11/5472
Hirschmann	920287A (locking system)	T/4/11/11/10883
Hirschmann	920287B (locking system)	T/4/11/11/10332
Hirschmann	920702A (locking system)	TRC/34/9770/2022
HUF	HUF13145 (locking system)	T/4/11/11/2242
HUF	HUF14632 (locking system)	T/4/11/11/4355
MARQUARDT	DC12A (locking system)	T/4/11/11/933
MARQUARDT	DC12B (locking system)	T/4/11/11/9429
MARQUARDT	DC12K (locking system)	T/4/11/11/9430
MARQUARDT	MS2 (locking system)	T/4/11/11/6493
MARQUARDT	MS4 (locking system)	T/4/11/11/6493
MARQUARDT	MS5 (locking system)	T/4/11/11/3509
MARQUARDT	MS7 (locking system)	TRC/34/14099/2024
MARQUARDT	3350.38 (locking system)	TRC/34/12899/2023
MARQUARDT	MK1 (locking system)	TRC/34/7629/2020
MARQUARDT	MK2 (locking system)	TRC/34/7630/2020
MARQUARDT	MK3 (locking system)	TRC/34/13651/2024
MARQUARDT	MU3 (locking system)	TRC/34/12770/2023
MARQUARDT	MUB1 (locking system)	TRC/34/14013/2024
Valeo	ARTEMIS-SUB-01 (locking system)	TRC/34/13621/2023
WITTE-Velbert	SDHTAG3NFC (locking system)	T/4/11/11/2635

CANADA

REGULATORY RADIO IDENTIFIERS

Manufacturer	Model designation	Radio equipment approval number
Continental Automotive	CMKG2 (locking system)	IC: 7812D-CMKG2
Continental Automotive Technologies	NTG7Q MID LF2 (head unit)	IC: NTG7QMIDLF2
Continental Automotive Technologies	NTG7Q HIGH LF2 (head unit)	IC: NTG7QHIGLF2
Continental Automotive Technologies	NTG7Q PREMIUM LF2 (head unit)	IC: NTG7QPREF2
MARQUARDT	MS6 (locking system)	IC: 2701A-MS6
Sennheiser	M3IETW2R (Earbud)	IC:2099A-M3IETW2R
Sennheiser	M3IETW2L (Earbud)	IC:2099A-M3IETW2L
Sennheiser	BTT100 (Bluetooth Audio Transmitter)	IC:2099A-BTT100

Manufacturer	Model designation	Radio equipment approval number
Sennheiser	M3IETW2 C (Charging Case)	CAN ICS-3(B)/NMB-3(B)
Vitesco	HFA30 (Handsfree-Access)	28616-HFA30

KUWAIT

REGULATORY RADIO IDENTIFIERS

Manufacturer	Model designation	Radio equipment approval number
HUF	HUF13145 (locking system)	Ref. 5873
Continental Automotive	CMKG2 (locking system)	Ref. 6716
Sennheiser	M3IETW2 (Momentum True Wireless 2)	Ref. 4870
Sennheiser	BTT100 (Bluetooth Audio Transmitter)	Ref. 4871
Vitesco	HFA30 (Handsfree-Access)	Ref. 7272

MALAYSIA

REGULATORY RADIO IDENTIFIERS

Manufacturer	Model designation	Radio equipment approval number
Continental ADC	ARS6-A (radar sensor)	HIDF15000153
Continental ADC	ARS4-C (radar sensor)	HIDF15000153
Bosch	FR5CPCCF (radar sensor)	CIDF15000490
Bosch	LRR3 (radar sensor)	CIDF15000490
Bosch	MRR1Rear (radar sensor)	CIDF15000490
Bosch	MRRe14FCR (radar sensor)	CIDF15000490
Bosch	MRRevo14F (radar sensor)	CIDF15000490
Bosch	F5CP12 (radar sensor)	RGLN/30A/0522/S(22-2490)
Continental Antenna	RKE213E1 (aerial amplifier)	HIDF15000153
Continental Antenna	RKE223E1GNS (aerial amplifier)	HIDF16000136
Continental Automotive	CMKG1 (locking system)	HIDF15000153
Continental Automotive	CMKG2 (locking system)	HIDF15000153
Continental Automotive	MARS Keyless (locking system)	CIDF15000578
Continental Automotive	UWBTRX1 (locking system)	HIDF15000153
Continental Automotive	D-WMI2020A (control unit)	RGEZ/12A/1019/S(19-4128)
Continental Automotive Technologies	NTG7Q MID LF2 (head unit)	RCCT/92G/0423/S(23-0350)
Continental Automotive Technologies	NTG7Q HIGH LF2 (head unit)	CCT/91G/0323/S(23-1291)
Continental Automotive Technologies	NTG7Q PREMIUM LF2 (head unit)	RGQB/05A/0323/S(23-1293)

Manufacturer	Model designation	Radio equipment approval number
HELLA	DM4 (locking system)	RDDK/41A/0717/S(17-2269)
HELLA	RS6 (locking system)	CIDF15000578
Hirschmann	920287A (locking system)	RAUU/63A/0311/S(11-0432)
Hirschmann	920287B (locking system)	RAUU/22C/0615/S(15-1864)
Hirschmann	920702A (locking system)	HIDF15000153
Huf Baolong	TSSRE4A (tyre pressure sensor)	HIDF15000153
HUF	HUF13482 (locking system)	HIDF15000153
HUF	HUF13145 (locking system)	RFBY/09A/0422/S(22-1843)
HUF	HUF14632 (locking system)	RAYN/25A/0715/S(15-2385)
HUF	HUF4761 (locking system)	RAAU/16B/1112/S(12-2053)
MARQUARDT	DC12A (locking system)	RDDK/33A/0317/S(17-0669)
MARQUARDT	DC12B (locking system)	RAUU/62A/0311/S(11-0263)
MARQUARDT	DC12K (locking system)	RAUU/62A/0311/S(11-0264)
MARQUARDT	MS2 (locking system)	RDDK/31A/0217/S(17-0405)
MARQUARDT	MS4 (locking system)	RDDK/25B/1019/S(19-0943)
MARQUARDT	MS5 (locking system)	RGLO/02A/0720/S(20-2580)
MARQUARDT	MS6 (locking system)	CIDF19000029

Manufacturer	Model designation	Radio equipment approval number
MARQUARDT	MS7 (locking system)	CIDF19000029
MARQUARDT	MK1 (locking system)	CIDF19000029
MARQUARDT	MK2 (locking system)	CIDF19000029
MARQUARDT	MK3 (locking system)	CIDF19000029
MARQUARDT	MU3 (locking system)	CIDF19000029
MARQUARDT	MUB1 (locking system)	CIDF19000029
MARQUARDT	3350.38 (locking system)	CIDF19000029
Meta System	ITS/TPS (interior protection)	RAVG/18Q/0212/S(11-2068)
Meta System	MUW II (interior protection)	RAVG/17Q/0212/S(11-2067)
Schrader	AG5SP4 (tyre pressure sensor)	RCDD/03A/0615/S(19-2094)
Schrader	AG3PF4 (tyre pressure sensor)	RBEF/28A/0419/S/(19-1542)
Schrader	BG3FP4 (tyre pressure sensor)	RBEF/51A/0121/S/(20-5642)
Schrader	GG4T (tyre pressure sensor)	RBEF/09A/1017/S(17-3183)
Schrader	DG6W2D4 (tyre pressure sensor)	RBEF/09A/1017/S(17-3183)
Schrader	MFR (tyre pressure monitoring system control unit)	RAQP/62A/0419/S(19-1694)
Schrader	MFR3 (tyre pressure monitoring system control unit)	RAQP/62A/0419/S(19-1694)

Manufacturer	Model designation	Radio equipment approval number
Veoneer	77GHz MMRV1 (radar sensor)	HIDF15000153
Veoneer	77V12BSM (radar sensor)	HIDF15000153
Veoneer	77V12CRN (radar sensor)	HIDF15000153
Veoneer	77V125CRN (radar sensor)	HIDF15000153
WITTE-Velbert	SDHTAG3NFC (locking system)	RDDK/43B/0420/S(20-1749)
Vitesco	HFA30 (Handsfree-Access)	RGZK/03A/1223/S(23-5530)

MOROCCO

REGULATORY RADIO IDENTIFIERS

Manufacturer	Model designation	Radio equipment approval number
		AGREE PAR L'ANRT MAROC
Continental ADC	ARS4-A (radar sensor)	MR 9490 ANTR 2014-07-23
Continental ADC	ARS6-A (radar sensor)	MR 00033936 ANRT 2022-08-03
Continental ADC	ARS4-C (radar sensor)	MR 20231 ANRT 2019-06-27
Continental ADC	ARS441DP10 (radar sensor)	MR 20231 ANRT 2019-06-27
Bosch	FR5CPCCF (radar sensor)	MR 20575 ANRT 2019-07-29
Bosch	LRR3 (radar sensor)	MR 5371 ANRT 2010 2019-12-05
Bosch	MRR1Rear (radar sensor)	MR 9186 ANTR 2014-04-22
Bosch	MRRe14FCR (radar sensor)	MR 13900 ANTR 2017-05-04
Bosch	F5CP12 (radar sensor)	MR00032137ANRT2022
Continental Antenna	RKE213E1 (aerial amplifier)	MR 10631 ANTR 2015-07-16
Continental Antenna	RKE223E1GNS (aerial amplifier)	MR 21174 ANTR 2019-10-14
Continental Automotive	CMKG1 (locking system)	MR 21701 ANTR 2019-12-05
Continental Automotive	CMKG2 (locking system)	MR 36542 ANRT 2023-02-01
Continental Automotive	MARS Keyless (locking system)	MR 13681 ANTR 2017-04-04
Continental Automotive	UWBTRX1 (locking system)	MR 623 ANTR 2024-02-14
HELLA	DM4 (locking system)	MR 14426 ANTR 2017-07-28
Hirschmann	920287A (locking system)	MR 6700 ANTR 2011-11-16
Hirschmann	920287B (locking system)	MR 7260 ANTR 2012-06-13
Hirschmann	920702A (locking system)	MR 32214 ANTR 2022-03-08
Huf Baolong	TSSRE4A (tyre pressure monitoring system control unit)	MR 14320 ANTR 2017-07-07
Huf Baolong	TSSSG4G6b (tyre pressure monitoring system control unit)	MR 19561 ANTR 2019-04-26
HUF	HUF13482 (locking system)	MR 3374 ANRT 2024-07-31
HUF	HUF13145 (locking system)	MR 32395 ANRT 2022-03-24

Manufacturer	Model designation	Radio equipment approval number
HUF	HUF14632 (locking system)	MR 10506 ANTR 2015-06-22
HUF	HUF4761 (locking system)	MR 7829 ANTR 2013-02-14
MARQUARDT	DC12A (locking system)	MR 13429 ANTR 2017-03-03
MARQUARDT	DC12B (locking system)	MR 6698 ANTR 2021-11-04
MARQUARDT	DC12K (locking system)	MR 6699 ANTR 2021-11-04
MARQUARDT	MS2 (locking system)	MR 13300 ANTR 2017-02-15
MARQUARDT	MS4 (locking system)	MR 19199 ANTR 2019-03-25
MARQUARDT	MS5 (locking system)	MR 23805 ANRT 2020-04-22
MARQUARDT	MS6 (locking system)	MR 00000358 ANRT 2024-01-30
MARQUARDT	MS7 (locking system)	MR 00001197 ANTR 2024-03-25
MARQUARDT	MK1 (locking system)	MR 10645 ANTR 2015-07-21
MARQUARDT	MK2 (locking system)	MR 10987 ANTR 2015-10-22
MARQUARDT	MK3 (locking system)	MR 00041098 ANTR 2023-12-25
MARQUARDT	MU3 (locking system)	MR 00039580 ANTR 2023-08-08
MARQUARDT	3350.38 (locking system)	MR 18817 ANTR 2019-02-12
MARQUARDT	MUB1 (locking system)	MR 00000864 ANTR 2024-02-29

Manufacturer	Model designation	Radio equipment approval number
Schrader	AG5SP4 (tyre pressure monitoring system control unit)	MR 10216 ANRT 2015
Schrader	AG3PF4 (tyre pressure sensor)	MR 19241 ANRT 2019
Schrader	BG3FP4 (tyre pressure sensor)	MR00026829ANRT2020
Schrader	MFR (tyre pressure monitoring system control unit)	MR 10927 ANRT 2015
Schrader	MFR3 (tyre pressure monitoring system control unit)	MR 19527 ANRT 2019
Schrader	GG4T (tyre pressure sensor)	MR 14777 ANRT 2017-09-20
Schrader	DG6W2D4 (tyre pressure sensor)	MR 16355 ANRT 2018-04-19
Schrader	MC34MA4 (tyre pressure monitoring system control unit)	MR 6706 ANRT 2011-11-17
Veoneer	77GHz MMRV1 (radar sensor)	MR 10436 ANRT 2015-05-25
Veoneer	77V12BSM (radar sensor)	MR 20097 ANRT 2019-06-14
Veoneer	77V12CRN (radar sensor)	MR 20149 ANRT 2019-06-19
Veoneer	77V125CRN (radar sensor)	MR 27966 ANRT 2021-03-29
Valeo	ARTEMIS-SUB-01 (locking system)	MR 00000073 ANRT 2024-01-05
WITTE-Velbert	SDHTAG3NFC (locking system)	MR 23310 ANRT 2020-03-10

MEXICO

REGULATORY RADIO IDENTIFIERS

Manufacturer	Model designation	Radio equipment approval number
Continental ADC	ARS4-A (radar sensor)	IFETEL: RCPCOAR14-1191
Continental ADC	ARS6-A (radar sensor)	IFETEL: SYCOAR22-17289
Continental ADC	ARS4-C (radar sensor)	IFETEL: RLVCOR19-1062
Continental ADC	ARS441DP10 (radar sensor)	IFETEL: RLVCOR19-1062
Bosch	LRR3 (radar sensor)	IFETEL: RCPBOLR09-0828
Bosch	MRR1Rear (radar sensor)	IFETEL: RCPBOMR14-0922
Bosch	MRRe14FCR (radar sensor)	IFETEL: RCPBOMR17-0598
Continental Antenna	RKE213E1 (aerial amplifier)	IFETEL: RLVKARK15-1741
Continental Antenna	RKE223E1 (aerial amplifier)	IFETEL: RLVCORK19-2174
Continental Automotive	CMKG1 (locking system)	IFETEL: RCPCOCM19-2315
Continental Automotive	CMKG2 (locking system)	IFETEL: COCOCM22-31003
Continental Automotive	MARS Keyless (locking system)	IFETEL: RLVDAMA18-1827
Continental Automotive	UWBTRX1 (locking system)	IFETEL: MECOCM22-17609
Continental Automotive Hungary	HNA15_01 (Ramses 1.5) (communication module)	IFETEL: MECOHN24 - 29722
Continental Automotive Hungary	HNA15_02 (Ramses 1.5) (communication module)	IFETEL: MECOHN24 - 29725
Continental Automotive Technologies	NTG7Q MID LF2 (head unit)	IFETEL: MEMENT23 - 12200
Continental Automotive Technologies	NTG7Q HIGH LF2 (head unit)	IFETEL: MEMENT23 - 11923
Continental Automotive Technologies	NTG7Q PREMIUM LF2 (head unit)	IFETEL: MEMENT23 - 12204
Gentex	MUAHL5 (convenience system)	IFETEL: RCPGEMU15-0448
HELLA	DM4 (locking system)	IFETEL: RLVHEDM17-10
Hirschmann	920287A (locking system)	IFETEL: RLVHI9211-0472
Hirschmann	920287B (locking system)	IFETEL: RLVHI9212-0608
Hirschmann	920702A (locking system)	IFETEL: RLVHI9222-2674
Huf Baolong	TSSRE4A (tyre pressure sensor)	IFETEL: RLVHUTS17-0806
HUF	HUF13145 (locking system)	IFETEL: RCPHUHU22-2505
HUF	HUF14632 (locking system)	IFETEL: RLVHUHU15-1204
HUF	HUF4761 (locking system)	IFETEL: RLVHUHU12-1587
MARQUARDT	DC12A (locking system)	IFETEL: RLVMEDC17-0348

Manufacturer	Model designation	Radio equipment approval number
MARQUARDT	DC12B (locking system)	IFETEL: RLVMContinental ADC11-0446
MARQUARDT	DC12K (interior protection)	IFETEL: RLVMContinental ADC11-0446
MARQUARDT	MS2 (locking system)	IFETEL: RLVMAMS17-0222
MARQUARDT	MS4 (locking system)	IFETEL: RLVMAMS19-0449
MARQUARDT	MS5 (locking system)	IFETEL: RLVMEMS20-0957
MARQUARDT	MS6 (locking system)	IFETEL: MEMAMS24-03199
MARQUARDT	MS7 (locking system)	IFT MEMAMS24-22544
MARQUARDT	MK1 (locking system)	IFETEL: RLVMAMK15-1042
MARQUARDT	MK2 (locking system)	IFETEL: RLVMAMK15-1043
MARQUARDT	MK3 (locking system)	IFT MEMAMK24-22883
MARQUARDT	MU3 (locking system)	IFT MEMAMU25-22726
MARQUARDT	3350.38 (locking system)	IFETEL: RCPMA3319-0530
Schrader	AG5SP4 (tyre pressure sensor)	IFETEL: RCPSCAG15-0627
Schrader	AG3PF4 (tyre pressure sensor)	IFETEL: RLVSCAG19-0705
Schrader	BG3FP4 (tyre pressure sensor)	IFETEL: RLVSCBG21-0750

Manufacturer	Model designation	Radio equipment approval number
Schrader	MFR (tyre pressure monitoring system control unit)	IFETEL: RLVSCMF15-0959
Schrader	MFR3 (tyre pressure monitoring system control unit)	IFETEL: RLVSCMF19-0777
Schrader	GG4T (tyre pressure sensor)	IFETEL: RLVSCGG17-1665
Schrader	DG6W2D4 (tyre pressure sensor)	IFETEL: RLVSCDG18-04
Schrader	MC34MA4 (tyre pressure monitoring system control unit)	IFETEL: RCPSCMR14-062
Sennheiser	M3IETW2R (Earbud)	IFETEL: RCPSEM320-0435-A1
Sennheiser	M3IETW2L (Earbud)	IFETEL: RCPSEM320-0435
Sennheiser	BTT100 (Bluetooth Audio Transmitter)	IFETEL: RCPSEBT18-1407
WITTE-Velbert	SDHTAG3NFC (locking system)	IFETEL: RCPWISD20-0943
Vitesco	HFA30 (Handsfree-Access)	IFETEL: ROVIHF24-02919

MONGOLIA

REGULATORY RADIO IDENTIFIERS

Manufacturer	Model designation	Radio equipment approval number
Continental Automotive	CMKG1 (locking system)	A19000633
Continental Automotive	CMKG2 (locking system)	A23000900
Continental Automotive	MARS Keyless (locking system)	A18000328
HELLA	DM4 (locking system)	A18000329
Hirschmann	920702A (locking system)	A22000649
HUF	HUF13145 (locking system)	A22000674
MARQUARDT	DC12A (locking system)	A19000400
MARQUARDT	DC12B (locking system)	A19000371
MARQUARDT	DC12K (locking system)	A19000372
MARQUARDT	MS2 (locking system)	A18000289
MARQUARDT	MS4 (locking system)	A19000516
MARQUARDT	MS5 (locking system)	A20000085
MARQUARDT	MS6 (locking system)	A24001213
MARQUARDT	MS7 (locking system)	A24001253
MARQUARDT	MK1 (locking system)	A19000374
MARQUARDT	MK2 (locking system)	A19000374
MARQUARDT	MK3 (locking system)	A24001205
MARQUARDT	MU3 (locking system)	A23001102
MARQUARDT	MUB1 (locking system)	A24001254
MARQUARDT	3350.38 (locking system)	A19000401
WITTE-Velbert	SDHTAG3NFC (locking system)	A20000067
Valeo	ARTEMIS-SUB-01 (locking system)	A24001183
Vitesco	HFA30 (Handsfree-Access)	A23001126

NIGER

REGULATORY RADIO IDENTIFIERS

Manufacturer	Model designation	Radio equipment approval number
Continental Antenna	RKE213E1 (aerial amplifier)	029/ARCEP/DG/19
Continental Automotive	MARS Keyless (locking system)	083/ARCEP/DG/19
HELLA	DM4 (locking system)	082/ARCEP/DG/19
Hirschmann	920287A (locking system)	097/ARCEP/DG/19
Hirschmann	920287B (locking system)	098/ARCEP/DG/19
HUF	HUF4761 (locking system)	053/ARCEP/DG/19

Manufacturer	Model designation	Radio equipment approval number
MARQUARDT	DC12A (locking system)	010/ARCEP/DG/19
MARQUARDT	DC12B (locking system)	008/ARCEP/DG/19
MARQUARDT	DC12K (locking system)	009/ARCEP/DG/19
MARQUARDT	MS2 (locking system)	014/ARCEP/DG/19
MARQUARDT	MS4 (locking system)	HOMO-0096/ARCEP/DG/2019
MARQUARDT	MK1 (locking system)	034/ARCEP/DG/19
MARQUARDT	MK2 (locking system)	035/ARCEP/DG/19
MARQUARDT	3350.38 (locking system)	015/ARCEP/DG/19
MARQUARDT	MU1 (locking system)	HOMO-0095/ARCEP/DG/2019

NIGERIA

REGULATORY RADIO IDENTIFIERS

Manufacturer	Model designation
Continental ADC	ARS4-A (radar sensor)
Continental ADC	ARS6-A (radar sensor)
Continental ADC	ARS4-C (radar sensor)
Bosch	FR5CPCCF (radar sensor)
Bosch	MRR1Rear (radar sensor)
Bosch	MRRe14FCR (radar sensor)
Bosch	F5CP12 (radar sensor)

Manufacturer	Model designation
Continental Antenna	RKE213E1 (aerial amplifier)
Continental Antenna	RKE223E1GNS (aerial amplifier)
Continental Automotive	CMKG1 (locking system)
Continental Automotive	CMKG2 (locking system)
Continental Automotive	MARS Keyless (locking system)
HELLA	DM4 (locking system)
Hirschmann	920287A (locking system)
Hirschmann	920287B (locking system)
Hirschmann	920702A (locking system)
HUF	HUF13145 (locking system)
HUF	HUF14632 (locking system)
HUF	HUF4761 (locking system)
MARQUARDT	DC12A (locking system)
MARQUARDT	DC12B (locking system)
MARQUARDT	DC12K (locking system)
MARQUARDT	MS2 (locking system)
MARQUARDT	MS4 (locking system)
MARQUARDT	MS5 (locking system)
MARQUARDT	MS6 (locking system)

Manufacturer	Model designation
MARQUARDT	MS7 (locking system)
MARQUARDT	MK1 (locking system)
MARQUARDT	MK2 (locking system)
MARQUARDT	MK3 (locking system)
MARQUARDT	MU3 (locking system)
MARQUARDT	MUB1 (locking system)
MARQUARDT	3350.38 (locking system)
Schrader	AG3PF4 (tyre pressure sensor)
Schrader	BG3FP4 (tyre pressure sensor)
Schrader	MFR3 (tyre pressure monitoring system control unit)
Valeo	ARTEMIS-SUB-01 (locking system)
Veoneer	77V12BSM (radar sensor)
Veoneer	77V12CRN (radar sensor)
Veoneer	77V125CRN (radar sensor)
WITTE-Velbert	SDHTAG3NFC (locking system)
Vitesco	HFA30 (Handsfree-Access)

OMAN

REGULATORY RADIO IDENTIFIERS

Manufacturer	Model designation	Radio equipment approval number
Continental ADC	ARS4-A (radar sensor)	TRA/TA-R/2016/14 D080134
Continental ADC	ARS6-A (radar sensor)	TRA/TA-R/14181/22 D172338
Continental ADC	ARS4-C (radar sensor)	TRA/TA-R/7769/19 D172338
Bosch	FR5CPCCF (radar sensor)	TRA/TA-R/7983/19 D172338
Bosch	LRR3 (radar sensor)	TRA/TA-R/1049/09
Bosch	MRR1Rear (radar sensor)	TRA/TA-R/1849/14
Bosch	MRRe14FCR (radar sensor)	TRA/TA-R/4353/17
Bosch	F5CP12 (radar sensor)	TRA/TA-R/13339/22
Continental Antenna	RKE213E1 (aerial amplifier)	TRA/TA-R/2715/15 D090258
Continental Antenna	RKE223E1GNS (aerial amplifier)	TRA/TA-R/8337/19 D172338
Continental Automotive	CMKG1 (locking system)	TRA/TA-R/8642/19 D172338
Continental Automotive	CMKG2 (locking system)	TRA/TA-R/15164/23 D100428

Manufacturer	Model designation	Radio equipment approval number
Continental Automotive	MARS Keyless (locking system)	TRA/TA-R/4158/17 D080134
HELLA	DM4 (locking system)	TRA/TA-R/4548/17 D080134
Hirschmann	920287A (locking system)	TRA/TA-R/0210/11 D080353
Hirschmann	920287B (locking system)	TRA/TA-R/0655/12 D080353
Hirschmann	920702A (locking system)	TRA/TA-R/13300/22 D172338
Huf Baolong	TSSRE4A (tyre pressure sensor)	TRA/TA-R/4516/17 D100428
Huf Baolong	TSSSG4G6b (tyre pressure sensor)	TRA/TA-R/7506/19
HUF	HUF13482 (locking system)	TRA/TA-R/18930/24
HUF	HUF13145 (locking system)	TRA/TA-R/13465/22
HUF	HUF14632 (locking system)	TRA/TA-R/2665/15
HUF	HUF4761 (locking system)	TRA/TA-R/0920/12
MARQUARDT	DC12A (locking system)	TRA/TA-RD/4056/17 D100428
MARQUARDT	DC12B (locking system)	TRA/TA-R/0227/11 D080353

Manufacturer	Model designation	Radio equipment approval number
MARQUARDT	DC12K (locking system)	TRA/TA-R/0228/11 D080353
MARQUARDT	MS2 (locking system)	TRA/TA-R/4136/17 D080134
MARQUARDT	MS4 (locking system)	TRA/TA-R/7316/19 D172249
MARQUARDT	MS5 (locking system)	TRA/TA-R/17887/24 D172338
MARQUARDT	MS6 (locking system)	TRA/TA-R/17509/24 D172338
MARQUARDT	MK1 (locking system)	TRA/TA-R/2848/15 D080353
MARQUARDT	MK2 (locking system)	TRA/TA-R/2900/15 D080353
MARQUARDT	MK3 (locking system)	TRA/TA-R/17223/23 D080354
MARQUARDT	MU3 (locking system)	TRA/TA-R/16494/23 D172338
MARQUARDT	3350.38 (locking system)	TRA/TA-R/7051/19 D172249
MARQUARDT	MUB1 (locking system)	TRA/TA-R/17721/24 D172338
Schrader	AG5SP4 (tyre pressure sensor)	TRA R/2380/15 D080134

Manufacturer	Model designation	Radio equipment approval number
Schrader	AG3PF4 (tyre pressure sensor)	TRA R/7287/19 D172338
Schrader	BG3FP4 (tyre pressure sensor)	TRA/TA-R/10694/20 D172338
Schrader	MFR (tyre pressure monitoring system control unit)	TRA/TA-R/7464/19 D090258
Schrader	MFR3 (tyre pressure monitoring system control unit)	TRA/TA-R/7467/19 D090258
Schrader	GG4T (tyre pressure sensor)	TRA/TA-R/4686/17 D080134
Schrader	DG6W2D4 (tyre pressure sensor)	TRA/TA-R/5511/18 D172249
Sennheiser	M3IETW2R (Earbud)	TRA/TA-R/10988/21
Sennheiser	BTT100 (Bluetooth Audio Transmitter)	TRA/TA-R/10976/21
Veoneer	77GHz MMRV1 (radar sensor)	TRA/TA-R/2706/15
Veoneer	77V12BSM (radar sensor)	TRA/TA-R/7706/19 D172338
Veoneer	77V12CRN (radar sensor)	TRA/TA-R/7707/19 D172338
Veoneer	77V125CRN (radar sensor)	TRA/TA-R/11335/21 D172338
WITTE-Velbert	SDHTAG3NFC (locking system)	TRA/TA-R/9150/20
Valeo	ARTEMIS-SUB-01 (locking system)	TRA/TA-R/17293/23 D172338
Vitesco	HFA30 (Handsfree-Access)	TRA/TA-R/17028/23 172338D

PAKISTAN

REGULATORY RADIO IDENTIFIERS

Manufacturer	Model designation	Radio equipment approval number
Continental ADC	ARS4-A (radar sensor)	TAC NO: 9.9014/2019
Continental ADC	ARS4-C (radar sensor)	TAC NO: 9.9389/2019
Continental ADC	ARS6-A (radar sensor)	TAC NO: 9.666/2024
Bosch	FR5CPCCF (radar sensor)	TAC NO: 9.198/2020
Bosch	F5CP12 (radar sensor)	TAC NO: 9.243/2023
Continental Antenna	RKE213E1 (aerial amplifier)	TAC NO: 9.142/2016
Continental Antenna	RKE223E1GNS (aerial amplifier)	TAC NO: 9.100169/2019
Continental Automotive	CMKG1 (locking system)	TAC NO:9.100175/2019
Continental Automotive	CMKG2 (locking system)	TAC NO: 9.153/2023
Continental Automotive	MARS Keyless (locking system)	TAC NO: 9.213/2017

Manufacturer	Model designation	Radio equipment approval number
Continental Automotive	D-WMI2020A (control unit)	TAC NO: 9.9836/2019
HELLA	DM4 (locking system)	TAC NO: 9.409/2017
Hirschmann	920287A (locking system)	TAC NO: 9.845/2013
Hirschmann	920287B (locking system)	TAC NO: 9.846/2013
Hirschmann	920702A (locking system)	TAC NO. 9.412/2022
HUF Baolong	TSSRE4A (tyre pressure sensor)	TAC NO: 9.620/2017
HUF Baolong	TSSSRG4G6B (tyre pressure monitoring system control unit)	TAC NO: 9.9345/2019
HUF	HUF14632 (locking system)	TAC NO: 9.598/2015
HUF	HUF4761 (locking system)	TAC NO: 9.790/2013
MARQUARDT	DC12A (locking system)	TAC NO: 9.131/2017
MARQUARDT	DC12B (locking system)	TAC NO: 9.829/2013
MARQUARDT	DC12K (locking system)	TAC NO: 9.830/2013
MARQUARDT	MS2 (locking system)	TAC NO: 9.133/2017
MARQUARDT	MS4 (locking system)	TAC NO: 9.100171/2019
MARQUARDT	MS5 (locking system)	TAC.NO: 9.322/2020
MARQUARDT	MS6 (locking system)	TAC.NO: 9.94/2024

Manufacturer	Model designation	Radio equipment approval number
MARQUARDT	MS7 (locking system)	TAC.NO: 9.322/2024
MARQUARDT	MK1 (locking system)	TAC NO: 9.486/2015
MARQUARDT	MK2 (locking system)	TAC NO: 9.497/2015
MARQUARDT	MK3 (locking system)	TAC NO: 9.1175/2023
MARQUARDT	MU3 (locking system)	TAC NO: 9.1168/2023
MARQUARDT	MUB1 (locking system)	TAC NO: 9.269/2024
Schrader	AG3PF4 (tyre pressure sensor)	TAC NO:9.039/2016
Schrader	AG5SP4 (tyre pressure sensor)	TAC NO:9.9167/2019
Schrader	BG3FP4 (tyre pressure sensor)	TAC NO:9.68/2021
Schrader	GG4T (tyre pressure sensor)	TAC NO:9.538/2017
Schrader	DG6W2D4 (tyre pressure sensor)	TAC NO: 9.789/2018
Valeo	ARTEMIS-SUB-01 (locking system)	TAC NO: 9.746/2024
Veoneer	77GHz MMRV1 (radar sensor)	TAC NO: 9.9284/2019
Veoneer	77V12BSM (radar sensor)	TAC NO: 9.9391/2019
Veoneer	77V12CRN (radar sensor)	TAC NO: 9.9391/2019
Veoneer	77V125CRN (radar sensor)	TAC NO: 9.477/2021

Manufacturer	Model designation	Radio equipment approval number
WITTE-Velbert	SDHTAG3NFC (locking system)	TAC NO: 9.527/2020
Vitesco	HFA30 (Handsfree-Access)	TAC NO: 9.1058/2023

PARAGUAY

REGULATORY RADIO IDENTIFIERS

Manufacturer	Model designation	Radio equipment approval number
Continental ADC	ARS4-A (radar sensor)	2019-05-I-0271
Continental ADC	ARS6-A (radar sensor)	2022-08-I-0513
Continental ADC	ARS4-C (radar sensor)	2019-11-I-0602
Bosch	FR5CPCCF (radar sensor)	2019-09-I-0508
Bosch	MRRe14FCR (radar sensor)	2017-06-I-0000162
Bosch	MRR1Rear (radar sensor)	2019-05-I-000236
Bosch	F5CP12 (radar sensor)	2022-05-I-0329
Continental Antenna	RKE213E1 (aerial amplifier)	2021-02-I-00101 y 2016-02-I-0000038
Continental Antenna	RKE223E1GNS (aerial amplifier)	2019-12-I-0656
Continental Automotive	CMKG1 (locking system)	2020-02-I-0110
Continental Automotive	CMKG2 (locking system)	2023-03-I-0153
Continental Automotive	MARS Keyless (locking system)	2017-05-I-0000136
Continental Automotive	D-WMI2016A	2019-03-I-0170
Continental Automotive	D-WMI2017A	2019-03-I-000171
Continental Automotive	D-WMI2017B	2019-03-I-000172
Continental Automotive	D-WMI2020A	2019-11-I-0600

Manufacturer	Model designation	Radio equipment approval number
HELLA	DM4 (locking system)	2022-06-I-0388 y 2017-08-I-0000261
Hirschmann	920287A (locking system)	2016-5-I-000134 y 2011-06-I-0059
Hirschmann	920287B (locking system)	2017-04-I-0000119 y 2012-05-I-0096
Hirschmann	920702A (locking system)	2022-03-I-0149
Huf Baolong	TSSRE4A (tyre pressure sensor)	2022-08-I-0528
HUF	HUF13482 (locking system)	2024-08-I-0727
HUF	HUF13145 (locking system)	2022-04-I-0235
HUF	HUF14632 (locking system)	2020-06-I-0284 y 2015-08-I-0000226
HUF	HUF4761 (locking system)	2017-12-I-0000409 y 2012-10-I-0178

Manufacturer	Model designation	Radio equipment approval number
MARQUARDT	DC12A (locking system)	2020-12-I-0898 y 2015-06-I-0000181
MARQUARDT	DC12B (locking system)	2021-05-I-0304; 2016-5-I-000144 y 2011-06-I-0067
MARQUARDT	DC12K (locking system)	2021-05-I-0305; 2016-5-I-000143 y 2011-06-I-0068
MARQUARDT	MS2 (locking system)	2017-04-I-0000101
MARQUARDT	MS4 (locking system)	2019-10-I-0581
MARQUARDT	MS5 (locking system)	2020-08-I-0604
MARQUARDT	MS6 (locking system)	2024-02-I-0164
MARQUARDT	MS7 (locking system)	2024-05-I-0400
MARQUARDT	MK1 (locking system)	2020-07-I-0390 y 2015-07-I-0000200

Manufacturer	Model designation	Radio equipment approval number
MARQUARDT	MK2 (locking system)	2020-07-I-0391 y 2015-07-I-0000201
MARQUARDT	MK3 (locking system)	2024-03-I-0256
MARQUARDT	MU3 (locking system)	2023-08-I-0590
MARQUARDT	MUB1 (locking system)	2024-05-I-0401
MARQUARDT	3350.38 (locking system)	2024-02-I-0190 y 2019-04-I-000216
Schrader	AG5SP4 (tyre pressure sensor)	2015-04-I-0000150
Schrader	AG3PF4 (tyre pressure sensor)	2019-05-1-000261
Schrader	BG3FP4 (tyre pressure sensor)	2021-02-I-0063
Schrader	GG4T (tyre pressure sensor)	2020-02-1-0044
Schrader	DG6W2D4 (tyre pressure sensor)	2019-11-1-0632
Veoneer	77GHz MMRV1 (radar sensor)	2020-07-I-0510
Veoneer	77V12BSM (radar sensor)	2019-07-I-0399
Veoneer	77V12CRN (radar sensor)	2019-07-I-0398
Veoneer	77V125CRN (radar sensor)	2021-04-I-0188
Vitesco	HFA30 (Handsfree-Access)	2023-11-I-0808
Valeo	ARTEMIS-SUB-01 (locking system)	2024-01-I-0074
WITTE-Velbert	SDHTAG3NFC (locking system)	2020-06-I-0326

Additional specific information

Charging unit for the wireless charging of mobile communication devices (WMI):

D-WMI2020A:

This vehicle is equipped with the following radio frequency component approved by CONATEL – Paraguay: wireless interface for mobile devices, Continental brand, model D-WMI2020A, manufactured by Continental Automotive GmbH.

Radio equipment approval number: 2019-11-I-0600

Rear Seat Entertainment System:

DAIRSE:

Importer: Condor S.A.C.I Casa Central, J.B. Gorostiaga 315 y Guaraníes, Asunción, Paraguay, (595 21) 569 7000, sac@condor.com.py

PHILIPPINES

REGULATORY RADIO IDENTIFIERS

Manufacturer	Model designation	Radio equipment approval number
Continental ADC	ARS4-A (radar sensor)	ESD-1409466C
Continental ADC	ARS4-C (radar sensor)	ESD-1920226C
Bosch	FR5CPCCF (radar sensor)	ESD-1920531C
Bosch	MRR1Rear (radar sensor)	ESD-1408917C
Bosch	MRRe14FCR (radar sensor)	ESD-1716172C
Bosch	F5CP12 (radar sensor)	ESD-RCE-2229495
Continental Antenna	RKE213E1 (aerial amplifier)	ESD-1511856C
Continental Antenna	RKE223E1GNS (aerial amplifier)	ESD-1921015C
Continental Automotive	CMKG1 (locking system)	ESD-2021556C
Continental Automotive	CMKG2 (locking system)	ESD-RCE-2332806
Continental Automotive	MARS Keyless (locking system)	ESD-1714865C
HELLA	DM4 (locking system)	ESD-1715539C
Hirschmann	920287A (locking system)	ESD-1105246C
Hirschmann	920287B (locking system)	ESD-1206044C
Hirschmann	920702A (locking system)	ESD-RCE-2229632
Huf Baolong	TSSRE4A (tyre pressure sensor)	ESD-1715393C
HUF	HUF13145 (locking system)	ESD-RCE-2229722
HUF	HUF14632 (locking system)	ESD-1511236C
HUF	HUF4761 (locking system)	ESD-1206521C
MARQUARDT	DC12A (locking system)	ESD-1714489C
MARQUARDT	DC12B (locking system)	ESD-1105216C
MARQUARDT	DC12K (locking system)	ESD-1105215C
MARQUARDT	MS2 (locking system)	ESD-1715652C
MARQUARDT	MS4 (locking system)	ESD-1919133C
MARQUARDT	MS5 (locking system)	ESD-REC-20437299

Manufacturer	Model designation	Radio equipment approval number
MARQUARDT	MS7 (locking system)	ESD-2022426C
MARQUARDT	MK1 (locking system)	ESD-1510644C
MARQUARDT	MK2 (locking system)	ESD-1510645C
MARQUARDT	MK3 (locking system)	ESD-REC-2436842
MARQUARDT	MU3 (locking system)	ESD-REC-2436843
MARQUARDT	3350.38 (locking system)	ESD-1919198C
MARQUARDT	MUB1 (locking system)	ESD-REC-2436916
Schrader	AG5SP4 (tyre pressure sensor)	ESD-1715393C
Schrader	AG3PF4 (tyre pressure sensor)	ESD-1919585C
Schrader	BG3FP4 (tyre pressure sensor)	ESD-RCE-2124846
Schrader	GG4T (tyre pressure sensor)	ESD-1715977C
Schrader	DG6W2D4 (tyre pressure sensor)	ESD-1817081C
Veoneer	77GHz MMRV1 (radar sensor)	ESD-1510921C
Vitesco	HFA30 (Handsfree-Access)	ESD-RCE-2335375
Valeo	ARTEMIS-SUB-01 (locking system)	ESD-RCE-2436285
WITTE-Velbert	SDHTAG3NFC (locking system)	ESD-2022599C

ZAMBIA

REGULATORY RADIO IDENTIFIERS

Manufacturer	Model designation	Radio equipment approval number
Continental Antenna	RKE223E1 (aerial amplifier)	ZMB/ZICTA/TA/2019/3/11
Continental Automotive	MARS Keyless (locking system)	ZMB/ZICTA/TA/2019/3/3
HELLA	DM4 (locking system)	ZMB/ZICTA/TA/2019/3/4
Hirschmann	920287A (locking system)	ZMB/ZICTA/TA/2019/7/12
Hirschmann	920287B (locking system)	ZMB/ZICTA/TA/2019/7/11
HUF	HUF4761 (locking system)	ZMB/ZICTA/TA/2018/12/18
MARQUARDT	DC12A (locking system)	ZMB/ZICTA/TA/2019/5/16
MARQUARDT	DC12B (locking system)	ZMB/ZICTA/TA/2019/5/17
MARQUARDT	DC12K (locking system)	ZMB/ZICTA/TA/2019/5/18
MARQUARDT	MS2 (locking system)	ZMB/ZICTA/TA/2018/9/30
MARQUARDT	MS4 (locking system)	ZMB/ZICTA/TA/2019/7/123
MARQUARDT	MK1 (locking system)	ZMB/ZICTA/TA/2019/3/20
MARQUARDT	MK2 (locking system)	ZMB/ZICTA/TA/2019/3/21
MARQUARDT	3350.38 (locking system)	ZMB/ZICTA/TA/2019/3/6

Manufacturer	Model designation	Radio equipment approval number
MARQUARDT	MU1 (locking system)	ZMB/ZICTA/TA/2019/7/124
Valeo	ARTEMIS-SUB-01 (locking system)	ZMB/ZICTA/TA/2024/1/08

SENEGAL

AGREE PAR ARTP SENEGAL

Numéro d'agrément : XXXXXX/AG/ER

REGULATORY RADIO IDENTIFIERS

Manufacturer	Model designation	Radio equipment approval number
Continental Automotive	CMKG2 (locking system)	072504/AG/ER
Continental Automotive Technologies	NTG7Q MID LF2 (head unit)	072486/AG/ER
Continental Automotive Technologies	NTG7Q HIGH LF2 (head unit)	072487/AG/ER
Continental Automotive Technologies	NTG7Q PREMIUM LF2 (head unit)	072488/AG/ER
Continental Automotive Technologies	NTG7Q PREMIUMPLUS LF2 (head unit)	072689/AG/ER
HUF	HUF13482 (locking system)	072954/AG/ER
MARQUARDT	MK3 (locking system)	072784/AG/ER
MARQUARDT	MU3 (locking system)	072676/AG/ER
MARQUARDT	MS7 (locking system)	072845/AG/ER
MARQUARDT	MUB1 (locking system)	072819/AG/ER
Valeo	ARTEMIS-SUB-01 (locking system)	072776/AG/ER

SERBIA

REGULATORY RADIO IDENTIFIERS

Manufacturer	Model designation	Radio equipment approval number
Continental ADC	ARS4-A (radar sensor)	011 20
Continental ADC	ARS6-A (radar sensor)	038 22
Continental ADC	ARS4-C (radar sensor)	011 19
Bosch	FR5CPCCF (radar sensor)	011 19
Bosch	LRR3 (radar sensor)	011 19
Bosch	MRR1Rear (radar sensor)	011 17
Bosch	MRRe14FCR (radar sensor)	005 17
Continental Antenna	RKE213E1 (aerial amplifier)	005 24

Manufacturer	Model designation	Radio equipment approval number
Continental Antenna	RKE223E1GNS (aerial amplifier)	005 22
Continental Automotive	CMKG1 (locking system)	005 20
Continental Automotive	CMKG2 (locking system)	005 23
Continental Automotive	MARS Keyless (locking system)	005 20
Continental Automotive	NTG7 MID	005 23
Continental Automotive	NTG7 HIGH	005 23
Continental Automotive	NTG7 PREMIUM	005 23
Continental Automotive	NTG7 PREMIUM PLUS	005 23
Continental Automotive Technologies	NTG7Q MID LF2 (head unit)	005 23
Continental Automotive Technologies	NTG7Q HIGH LF2 (head unit)	005 23
Continental Automotive Technologies	NTG7Q PREMIUM LF2 (head unit)	005 23
HELLA	DM4 (locking system)	005 20
Hirschmann	920287A (locking system)	005 18
Hirschmann	920287B (locking system)	005 18
Hirschmann	920702A (locking system)	005 22

Manufacturer	Model designation	Radio equipment approval number
Huf Baolong	TSSRE4A (tyre pressure sensor)	005 20
HUF	HUF13482 (locking system)	005 24
HUF	HUF13145 (locking system)	005 22
HUF	HUF14632 (locking system)	005 21
HUF	HUF4761 (locking system)	005 21
MARQUARDT	DC12A (locking system)	005 20
MARQUARDT	DC12B (locking system)	005 20
MARQUARDT	DC12K (locking system)	005 20
MARQUARDT	MS2 (locking system)	011 17
MARQUARDT	MS4 (locking system)	005 19
MARQUARDT	MS5 (locking system)	005 24
MARQUARDT	MS6 (locking system)	005 24
MARQUARDT	MS7 (locking system)	005 24
MARQUARDT	MK1 (locking system)	005 24
MARQUARDT	MK2 (locking system)	005 24
MARQUARDT	MK3 (locking system)	005 24
MARQUARDT	MU3 (locking system)	005 23

Manufacturer	Model designation	Radio equipment approval number
MARQUARDT	3350.38 (locking system)	005 22
MARQUARDT	MUB1 (locking system)	005 24
Meta System	MUW II (interior protection)	011 19
Schrader	AG5SP4 (tyre pressure sensor)	005 15
Schrader	AG3PF4 (tyre pressure sensor)	005 15
Schrader	BG3FP4 (tyre pressure sensor)	005 20
Schrader	GG4T (tyre pressure sensor)	005 17
Schrader	DG6W2D4 (tyre pressure sensor)	005 18
Schrader	MC34MA4 (tyre pressure monitoring system control unit)	011 11
Valeo	ARTEMIS-SUB-01 (locking system)	011 18
Veoneer	77GHz MMRV1 (radar sensor)	005 24
Veoneer	77V12BSM (radar sensor)	011 19
Veoneer	77V12CRN (radar sensor)	011 19
Veoneer	77V125CRN (radar sensor)	038 21
Vitesco	HFA30 (Handsfree-Access)	011
WITTE-Velbert	SDHTAG3NFC (locking system)	005 20

SINGAPORE

REGULATORY RADIO IDENTIFIERS

Manufacturer	Model designation	Radio equipment approval number
		Complies with IMDA Standards
Continental ADC	ARS4-A (radar sensor)	DA103365
Continental ADC	ARS6-A (radar sensor)	DA103365
Continental ADC	ARS4-C (radar sensor)	DA103365
Bosch	FR5CPCCF (radar sensor)	DA103365
Bosch	LRR3 (radar sensor)	DA103365
Bosch	MRR1Rear (radar sensor)	DA103365
Bosch	MRRe14FCR (radar sensor)	DA103365
Bosch	F5CP12 (radar sensor)	N3827-22
Continental Antenna	RKE213E1 (aerial amplifier)	DA105282
Continental Antenna	RKE223E1GNS (aerial amplifier)	DA107248

Manufacturer	Model designation	Radio equipment approval number
Continental Automotive	CMKG1 (locking system)	DA103365
Continental Automotive	CMKG2 (locking system)	DB106440
Continental Automotive	MARS Keyless (locking system)	DA105282
Continental Automotive	UWBTRX1 (locking system)	DB107091
Continental Automotive	D-WMI2020A (control unit)	DA103365
Continental Automotive Technologies	NTG7Q MID LF2 (head unit)	DA105282
Continental Automotive Technologies	NTG7Q HIGH LF2 (head unit)	DA105282
Continental Automotive Technologies	NTG7Q PREMIUM LF2 (head unit)	DA105282
Harman Becker	HERMES 3.0 (communication module)	DB107091
HELLA	DM4 (locking system)	DA103365 N3308-22
Hirschmann	920287A (locking system)	DA103365
Hirschmann	920287B (locking system)	DA103365
Hirschmann	920702A (locking system)	DA105282
HUF	HUF13482 (locking system)	DB105654
HUF	HUF13145 (locking system)	N2197-22
HUF Baolong	TSSRE4A (tyre pressure sensor)	DA30668
HUF Baolong	TSSSG4G6b (tyre pressure sensor)	DA28467
HUF	HUF14632 (locking system)	DA105282
HUF	HUF4761 (locking system)	DA103365
MARQUARDT	DC12A (locking system)	DA103787
MARQUARDT	DC12B (locking system)	DA103365
MARQUARDT	DC12K (locking system)	DA103365
MARQUARDT	MS2 (locking system)	DA103787
MARQUARDT	MS4 (locking system)	DA103787
MARQUARDT	MS6 (locking system)	DA103787
MARQUARDT	MS7 (locking system)	DB103787
MARQUARDT	MK1 (locking system)	DA103365
MARQUARDT	MK2 (locking system)	DA103365
MARQUARDT	MK3 (locking system)	DA103787
MARQUARDT	MU3 (locking system)	DA103787
MARQUARDT	MBU1 (locking system)	DA103787
MARQUARDT	3350.38 (locking system)	DB107091
Meta System	ITS/TPS (interior protection)	DA103365
Meta System	MUW II (interior protection)	DA103365

Manufacturer	Model designation	Radio equipment approval number
Schrader	AG5SP4 (tyre pressure sensor)	DA103787
Schrader	AG3PF4 (tyre pressure sensor)	DA107968
Schrader	BG3FP4 (tyre pressure sensor)	DA103365
Schrader	GG4T (tyre pressure sensor)	DA105282
Schrader	DG6W2D4 (tyre pressure sensor)	DA105282
Veoneer	77GHz MMRV1 (radar sensor)	DA103365
Veoneer	77V12BSM (radar sensor)	DA103365
Veoneer	77V12CRN (radar sensor)	DA103365
Veoneer	77V125CRN (radar sensor)	DA103365
Visteo	HFA30 (Handsfree-Access)	N4949-23
WITTE-Velbert	SDHTAG3NFC (locking system)	DA107248

SOUTH AFRICA

REGULATORY RADIO IDENTIFIERS

Manufacturer	Model designation	Radio equipment approval number
Continental ADC	ARS4-A (radar sensor)	TA-2014/1637
Continental ADC	ARS6-A (radar sensor)	TA-2022/1837
Continental ADC	ARS4-C (radar sensor)	TA-2019/1595
Bosch	FR5CPCCF (radar sensor)	TA-2019/1200
Bosch	MRR1Rear (radar sensor)	TA-2014/212
Bosch	MRRe14FCR (radar sensor)	TA-2017/2013
Bosch	LRR3 (radar sensor)	TA-2009/464
Bosch	F5CP12 (radar sensor)	TA-2022/0153
Continental Antenna	RKE213E1 (aerial amplifier)	TA-2015/1438
Continental Antenna	RKE223E1 (aerial amplifier)	TA-2020/043
Continental Automotive	CMKG1 (locking system)	TA-2019/5405
Continental Automotive	CMKG2 (locking system)	TA-2022/3611_CMKG2
Continental Automotive	MARS Keyless (locking system)	TA-2016/3500
Continental Automotive	UWBTRX1 (locking system)	TA-2021/3460
Continental Automotive Technologies	NTG7Q MID LF2 (head unit)	TA-2023/0091
Continental Automotive Technologies	NTG7Q HIGH LF2 (head unit)	TA-2023/0111
Continental Automotive Technologies	NTG7Q PREMIUM LF2 (head unit)	TA-2023/0090

Manufacturer	Model designation	Radio equipment approval number
Gentex	MUAHL5 (convenience system)	TA-2015/1386
HELLA	DM4 (locking system)	TA-2017/2518
Hirschmann	920287A (locking system)	TA-2011/374
Hirschmann	920287B (locking system)	TA-2013/1262
Hirschmann	920702A (locking system)	TA-2022/0162
Huf Baolong	TSSRE4A (tyre pressure sensor)	TA-2017/1393
Huf Baolong	TSSSG4G6b (tyre pressure sensor)	TA-2019/1440
HUF	HUF13482 (locking system)	TA-2024/2001
HUF	HUF13145 (locking system)	TA-2022/0375
HUF	HUF14632 (locking system)	TA-2015/1077
HUF	HUF4761 (locking system)	TA-2012/1543
Meta System	ITS Master (interior protection)	TA-2011/1636
Meta System	ITS Sensor (interior protection)	TA-2011/1227
Meta System	MUW II (interior protection)	TA-2019/261
MARQUARDT	DC12A (locking system)	TA-2017/312

Manufacturer	Model designation	Radio equipment approval number
MARQUARDT	DC12B (locking system)	TA-2011/370
MARQUARDT	DC12K (locking system)	TA-2012/1542
MARQUARDT	MS2 (locking system)	TA-2016/3314
MARQUARDT	MS4 (locking system)	TA-2019/843
MARQUARDT	MS5 (locking system)	TA-2020/5765
MARQUARDT	MS6 (locking system)	TA-2023/3673
MARQUARDT	MS7 (locking system)	TA-2024/1232
MARQUARDT	MK1 (locking system)	TA-2015/179
MARQUARDT	MK2 (locking system)	TA-2015/180
MARQUARDT	MK3 (locking system)	TA-2024/0439
MARQUARDT	3350.38 (locking system)	TA-2018/3985
MARQUARDT	MU3 (locking system)	TA-2023/1835
MARQUARDT	MUB1 (locking system)	TA-2024/0505
Schrader	AG5SP4 (tyre pressure sensor)	TA-2015/072
Schrader	AG3PF4 (tyre pressure sensor)	TA-2019-133
Schrader	BG3FP4 (tyre pressure sensor)	TA-2020/7731
Schrader	MFR (tyre pressure monitoring system control unit)	TA-2019/273

Manufacturer	Model designation	Radio equipment approval number
Schrader	MFR3 (tyre pressure monitoring system control unit)	TA-2019-273
Schrader	GG4T (tyre pressure sensor)	TA-2017/3884
Schrader	DG6W2D4 (tyre pressure sensor)	TA-2017/2933
Schrader	MC34MA4 (tyre pressure monitoring system control unit)	TA-2011/1370
Veoneer	77GHz MMRV1 (radar sensor)	TA-2015/2087
Veoneer	77V12BSM (radar sensor)	TA-2019/1380
Veoneer	77V12CRN (radar sensor)	TA-2019/1382
Veoneer	77V125CRN (radar sensor)	TA-2021/0150
Visteo	HFA30 (Handsfree-Access)	TA-2023/2469
WITTE-Velbert	SDHTAG3NFC (locking system)	TA-2020/055

SOUTH KOREA

REGULATORY RADIO IDENTIFIERS

Manufacturer	Model designation	Radio equipment approval number
Continental Antenna	RKE223E1 (aerial amplifier)	R-C-Ca3-RKE223E1
Continental Automotive	CMKG2 (locking system)	R-R-TeH-CMKG2
Continental Automotive Technologies	NTG7Q LF2 (head unit)	R-R-TeH- NTG7QLF2
Huf Baolong	TSSRE4A (tyre pressure sensor)	R-CRM-HHFTSSRE4A
Huf Baolong	TSSSG4G6 (tyre pressure monitoring system control unit)	R-REM-HHFTSSSG4G6
HUF	HUF14632 (locking system)	MSIP-CRM-HHF-HUF-14632
MARQUARDT	MS6 (locking system)	R-C-MQU-MS6
Schrader	MFR (tyre pressure monitoring system control unit)	MSIP-REM-SRD-MFR
Schrader	MFR3 (tyre pressure monitoring system control unit)	KCC R-R-SRD-MFR3A
Schrader	MC34MA4 (tyre pressure monitoring system control unit)	KCC-REM-SRD-MRXMC34MA4
Schrader	AG5SP4 (tyre pressure sensor)	MSIP-CRM-SRD-AG5SP4
Schrader	AG3PF4 (tyre pressure sensor)	R-C-SRD-AG3PF4

Manufacturer	Model designation	Radio equipment approval number
Schrader	BG3FP4 (tyre pressure sensor)	R-C-SRD-BG3FP4
Schrader	GG4T (tyre pressure sensor)	MSIP-CRM-SRD-GG4T
Schrader	DG6W2D4 (tyre pressure sensor)	R-CRM-SRD-DG6W2D4
Visteo	HFA30 (Handsfree-Access)	R-R-vT2-HFA30

TANZANIA

TCRA Approved XXXXXX/XXX/XXXX

REGULATORY RADIO IDENTIFIERS

Manufacturer	Model designation	Radio equipment approval number
Continental Antenna	RKE223E1 (aerial amplifier)	TCRA/TAC/018/2016

THAILAND

REGULATORY RADIO IDENTIFIERS

Manufacturer	Model designation	Radio equipment approval number
Continental Automotive Technologies	NTG7Q PREMIUM LF2 (head unit)	130111-23-0132

ARTEMIS and MB - 4G eCall box:

This radio communication device has an electromagnetic wave that complies with the Safety Standard for the Use of Radiocommunication Equipment on Human Health announced by the National Telecommunications Commission.

TOGO

REGULATORY RADIO IDENTIFIERS

Manufacturer	Model designation	Radio equipment approval number
Continental Antenna	RKE223E1 (aerial amplifier)	No. 024/19
Continental Automotive	MARS Keyless (locking system)	No. 059/24
HELLA	DM4 (locking system)	No. 039/19
Hirschmann	920287A (locking system)	No. 089/19
Hirschmann	920287B (locking system)	No. 088/19
HUF	HUF4761 (locking system)	No. 041/19
MARQUARDT	DC12A (locking system)	No. 055/19
MARQUARDT	DC12B (locking system)	No. 057/19
MARQUARDT	DC12K (locking system)	No. 056/19
MARQUARDT	MS2 (locking system)	No. 008/19
MARQUARDT	MS4 (locking system)	No. 101/19
MARQUARDT	MK1 (locking system)	No. 021/19
MARQUARDT	MK2 (locking system)	No. 022/19
MARQUARDT	3350.38 (locking system)	No. 016/20

UKRAINE

REGULATORY RADIO IDENTIFIERS

Manufacturer	Model designation	Radio equipment approval number
Continental ADC	ARS4-A (radar sensor)	UA RF: 1CONT0004
Continental ADC	ARS6-A (radar sensor)	UA RF: 1CONT0013
Continental Antenna	RKE213E1 (aerial amplifier)	UKR.355-123/19
Continental Antenna	RKE223E1GNS (aerial amplifier)	UA.R.TR.052.682-19
Continental Automotive	CMKG1 (locking system)	UA1.001.021175-20-TE
Continental Automotive	CMKG2 (locking system)	UA.032.CT.0105-23
Continental Automotive	MARS Keyless (locking system)	RTS.UKR.355-34/18
Continental Automotive Technologies	NTG7Q MID LF2 (head unit)	UA.TR.052
Continental Automotive Technologies	NTG7Q HIGH LF2 (head unit)	UA.TR.052
Continental Automotive Technologies	NTG7Q PREMIUM LF2 (head unit)	UA.TR.052
HELLA	DM4 (locking system)	UA.TR.109
Hirschmann	920287A (locking system)	UKR.355-7/20
Hirschmann	920287B (locking system)	UKR.355-8/20
Huf Baolong	TSSRE4A (tyre pressure sensor)	UA 1.001.018568-19-TE
Huf Baolong	TSSSG4G6b (tyre pressure monitoring system control unit)	UA 1.001.019289-19-TE
HUF	HUF13145 (locking system)	UKR.355-113/19
HUF	HUF14632 (locking system)	UKR.355-113/19
HUF	HUF4761 (locking system)	UA1.001.018653-19-TE
MARQUARDT	DC12A (locking system)	UA.R.TR.052.307-19
MARQUARDT	DC12B (locking system)	UA.R.TR.052.308-19
MARQUARDT	DC12K (locking system)	UA.R.TR.052.309-19
MARQUARDT	MS2 (locking system)	UA1.001.019129-19-TE
MARQUARDT	MS4 (locking system)	UA.R.TR.052.528-19
MARQUARDT	MS5 (locking system)	UA.TR.028
MARQUARDT	MS7 (locking system)	UA.TR.001.0355.30.00624-24
MARQUARDT	MK1 (locking system)	UA1.001.019233-19-TE
MARQUARDT	MK2 (locking system)	UA1.001.019234-19-TE
MARQUARDT	MK3 (locking system)	UA.TR.001.0355.30.01316-23
MARQUARDT	MU3 (locking system)	UA.TR.001.0355.30.01276-23

Manufacturer	Model designation	Radio equipment approval number
MARQUARDT	MUB1 (locking system)	UA.TR.001.0355.30.00623-24
MARQUARDT	3350.38 (locking system)	UA1.001.018888-19-TE
Schrader	AG5SP4 (tyre pressure sensor)	UA.TR. 032
Schrader	AG3PF4 (tyre pressure sensor)	UA-TR-001
Schrader	BG3FP4 (tyre pressure sensor)	UA-TR-109
Schrader	GG4T (tyre pressure sensor)	UA.TR. 028
Schrader	DG6W2D4 (tyre pressure sensor)	UA.TR. 028
Valeo	ARTEMIS-SUB-01 (locking system)	UA.R.TR.052.071-24
WITTE-Velbert	SDHTAG3NFC (locking system)	UA.R.TR.052.120-20

UZBEKISTAN

REGULATORY RADIO IDENTIFIERS

Manufacturer	Model designation
Continental Automotive	RKE213E1 (aerial amplifier)
Continental Automotive	RKE223E1GNS (aerial amplifier)
Continental Automotive	CMKG1 (locking system)
Continental Automotive	CMKG2 (locking system)
Continental Automotive	MARS Keyless (locking system)
HELLA	DM4 (locking system)
Hirschmann	920287A (locking system)
Hirschmann	920287B (locking system)
Hirschmann	920702A (locking system)
HUF	HUF13145 (locking system)
MARQUARDT	DC12A (locking system)
MARQUARDT	DC12B (locking system)
MARQUARDT	DC12K (locking system)
MARQUARDT	MS2 (locking system)
MARQUARDT	MS4 (locking system)
MARQUARDT	MS5 (locking system)
MARQUARDT	MS6 (locking system)
MARQUARDT	MS7 (locking system)
MARQUARDT	MK1 (locking system)
MARQUARDT	MK2 (locking system)
MARQUARDT	MK3 (locking system)

Manufacturer	Model designation
MARQUARDT	MU3 (locking system)
MARQUARDT	3350.38 (locking system)
MARQUARDT	MUB1 (locking system)
Visteo	HFA30 (Handsfree-Access)
Valeo	ARTEMIS-SUB-01 (locking system)
WITTE-Velbert	SDHTAG3NFC (locking system)

UNITED ARAB EMIRATES

TDRA هيئة تنظيم الاتصالات والحكومة الرقمية
TELECOMMUNICATIONS AND DIGITAL GOVERNMENT REGULATORY AUTHORITY

REGULATORY RADIO IDENTIFIERS

Manufacturer	Model designation	Radio equipment approval number
Continental ADC	ARS4-A (radar sensor)	TA RTTE: Er558296/17, DA40068/15
Continental ADC	ARS4-C (radar sensor)	TA RTTE: ER77062/19, DA40068/15
Bosch	FR5CPCCF (radar sensor)	TA RTTE: ER74533/19, DA36758/14
Bosch	NRCS2P (radar sensor)	TA RTTE: ER88778/20, DA36758/14
Continental Antenna	RKE213E1 (aerial amplifier)	TRA ER64693/18, DA65993/17
Continental Antenna	RKE223E1GNS (aerial amplifier)	TRA ER76442/19, DA65993/17
Continental Automotive	CMKG1 (locking system)	TRA ER77964/20, DA0018994/09
Continental Automotive	CMKG2 (locking system)	TRA ER17713/23, DA36975/14
Continental Automotive	MARS Keyless (locking system)	TRA ER56005/17, DA44932/15

Manufacturer	Model designation	Radio equipment approval number
Continental Automotive	UWBTRX1 (locking system)	TRA ER11321/22, DA36975/14
Continental Automotive Hungary	Ramses 1.5 (communication module)	ER32722/24
Continental Automotive Technologies	NTG7Q MID LF2 (head unit)	TDRA ER17731/23, DA76163/18
Continental Automotive Technologies	NTG7Q HIGH LF2 (head unit)	TDRA ER17730/23, DA76163/18
Continental Automotive Technologies	NTG7Q PREMIUM LF2 (head unit)	TDRA ER17732/23, DA76163/18
Gentex	MUAHL5 (convenience system)	TRA ER41849/15, DA35176/14
Harman Becker	HERMES 3.0 (communication module)	TRA ER03601/21, DA0028019/10
HELLA	DM4 (locking system)	TRA ER56616/17, DA44932/15
Hirschmann	920287A (locking system)	TRA ER52213/17, DA35219/14
Hirschmann	920287B (locking system)	TRA ER42011/15, DA35219/14

Manufacturer	Model designation	Radio equipment approval number
Hirschmann	920702A (locking system)	TRA ER10723/22, DA35219/14
Huf Baolong	TSSRE4A (tyre pressure sensor)	TRA ER57806/17, DA36976/14
Huf Baolong	TSSSG4G6b (tyre pressure monitoring system control unit)	TRA ER7307/19, DA0086237/12
HUF	HUF13482 (locking system)	TRA ER33320/24
HUF	HUF13145 (locking system)	TRA ER08607/22, DA36976/14
HUF	HUF14632 (locking system)	TRA ER63716/18, DA36976/14
HUF	HUF4761 (locking system)	TRA ER55496/17, DA36976/14
HUF	HUF13145 (locking system)	TRA ER08607/22 DA36976/14
MARQUARDT	DC12A (locking system)	TRA ER53465/17, DA0018994/09
MARQUARDT	DC12B (locking system)	TRA ER0067828/11, DA0018994/09
MARQUARDT	DC12K (locking system)	TRA ER0067829/11, DA0018994/09

Manufacturer	Model designation	Radio equipment approval number
MARQUARDT	MS2 (locking system)	TRA ER52668/17, DA0018994/09
MARQUARDT	MS4 (locking system)	TRA ER71616/19, DA0018994/09
MARQUARDT	MS5 (locking system)	TRA ER80720/20, DA0018994/09
MARQUARDT	MS6 (locking system)	TRA ER28697/24, DA0018994/09
MARQUARDT	MS7 (locking system)	TRA ER29729/24, DA0018994/09
MARQUARDT	MK1 (locking system)	TRA ER64145/18, DA0018994/09
MARQUARDT	MK2 (locking system)	TRA ER64146/18, DA0018994/09
MARQUARDT	MK3 (locking system)	TRA ER26811/23, DA0018994/09
MARQUARDT	3350.38 (locking system)	TRA ER69280/19, DA0018994/09
MARQUARDT	MU3 (locking system)	TRA ER25917/23, DA0018994/09
MARQUARDT	MUB1 (locking system)	TRA ER29344/24, DA0018994/09
Schrader	AG5SP4 (tyre pressure sensor)	TRA ER37156/15, DA0047074/10
Schrader	AG3PF4 (tyre pressure sensor)	TRA ER70533/19, DA0047074/10
Schrader	BG3FP4 (tyre pressure sensor)	TRA ER96175/21, DA0047074/10
Schrader	GG4T (tyre pressure sensor)	TRA ER57985/17, DA0047074/10
Schrader	DG6W2D4 (tyre pressure sensor)	TRA ER960528/18, DA0047074/10
Schrader	MC34MA4 (tyre pressure monitoring system control unit)	TRA ER37066/15, DA0047074/10
Sennheiser	M3IETW2L (Earbud)	ER78231/20
Sennheiser	BTT100 (Bluetooth Audio Transmitter)	ER64728/18
Veoneer	77GHz MMRV1 (radar sensor)	TA RTTE: ER96352/21; 0020858/10
Veoneer	77V12BSM (radar sensor)	TA RTTE: ER72324/19; 0020858/10

Manufacturer	Model designation	Radio equipment approval number
Veoneer	77V12CRN (radar sensor)	TA RTTE: ER72323/19; 0020858/10
Veoneer	77V125CRN (radar sensor)	TA RTTE: ER95775/21; 0020858/10
Visteo	HFA30 (Handsfree-Access)	TRA ER25428/23
WITTE-Velbert	SDHTAG3NFC (locking system)	TRA ER79695/20, DA0018994/09

UNITED KINGDOM
Additional specific information

Charging unit for the wireless charging of mobile communication devices (WMI):

D-WMI2016A, D-WMI2017A, D-WMI2017B:

Restrictions or Requirements in the UK: A separation distance of at least 10 cm between all persons and the device must be provided at all times. The Device must not be co-located or operating in conjunction with any other antenna or transmitter.

D-WMI2020A:

Restrictions or Requirements in the UK: A separation distance of at least 0 cm between all persons and the device must be provided at all times. The Device must not be co-located or operating in conjunction with any other antenna or transmitter.

UNITED STATES

REGULATORY RADIO IDENTIFIERS

Manufacturer	Model designation	Radio equipment approval number
Continental Automotive	CMKG2 (locking system)	FCC ID: KR5CMKG2
Continental Automotive Technologies	NTG7Q MID LF2 (head unit)	FCC ID: NTG7QMIDLF2
Continental Automotive Technologies	NTG7Q HIGH LF2 (head unit)	FCC ID: NTG7QHIGLF2
Continental Automotive Technologies	NTG7Q PREMIUM LF2 (head unit)	FCC ID: NTG7QPRELF2
HUF	HUF13145 (locking system)	FCC ID: YGOHUF13145
MARQUARDT	MS6 (locking system)	FCC ID:IYZMS6
Sennheiser	M3IETW2R (Earbud)	FCC ID: DMOM3IETW2R
Sennheiser	M3IETW2L (Earbud)	FCC ID: DMOM3IETW2L
Sennheiser	BTT100 (Bluetooth Audio Transmitter)	FCC ID: DMOBTT100
Visteo	HFA30 (Handsfree-Access)	FCC ID: 2A6TC-HFA30
WITTE-Velbert	SDHTAG3NFC (locking system)	FCC ID: DMOBTT100

Information on installation clearances

Charging unit for the wireless charging of mobile communication devices (WMI):

The charging unit for wireless charging of mobile devices (WMI) complies with FCC and IC radiation exposure limits established for an uncontrolled environment. This equipment must be installed and operated with a minimum distance of 0 cm (in contact) between the radiation source and your body. This transmitter must not be placed in the same location as, or used at the same time as, another transmitter or aerial.

Rear Seat Entertainment System:

For USA only: "This device complies with part 15 of the FCC Rules and ISED Canada licence-exempt RSS standard(s). Operation is subject to the following two conditions: (1) This device must not cause any harmful interference, and (2) This device must accept any interference received, including interference that may cause undesired operation.

Changes or modifications not expressly approved by the party responsible for compliance could void the user's authority to operate the equipment.

This device must be installed and used at a distance of at least 6 cm from the body."

For Canada only: "This device complies with ISED Canada RSS standards for licence-exempt two-way radios. Operation is subject to the following two conditions: (1) This device must not cause interference, and (2) This device must accept any interference received, including interference that may cause undesired operation of the device.

This equipment complies with ISED radiation exposure limits established for an uncontrolled environment. This equipment must be installed and operated with a minimum distance of 5 cm between the radiation source and your body."

Radar sensors:

ARS4-C (Continental ADC), ARS4-B (Continental ADC), ARS4-A (Continental ADC), FR5CPCCF (Bosch), MRR1REAR (Bosch), MRREVO14F (Bosch), LRR3 (Bosch), 77V12BSM (Veoneer), 77V12CRN (Veoneer), MMRV1 (Veoneer)

USA only: Information on exposure to high-frequency radiation:

This equipment complies with FCC radiation exposure limits established for an uncontrolled environment. This equipment must be installed and operated with a minimum distance of 20 cm between the radiation source and your body.

This transmitter must not be placed in the same location as, or used at the same time as, another aerial or transmitter.

For Canada only: This equipment should be installed and operated with a minimum distance of 20 cm between the radiation source and your body.

BT Audio Transmitter (BTT100):

This equipment complies with FCC and IC radiation exposure limits established for an uncontrolled environment. This equipment should be installed and operated with a minimum distance of 9 cm between the radiation source and your body.

This transmitter must not be placed in the same location as, or used at the same time as, another aerial or transmitter.

Infotainment system head unit (NTG7Q):

For USA only: This equipment complies with FCC and ISED radiation exposure limits established for an uncontrolled environment, the FCC guidelines for RF exposure and RSS Standard 102 of the ISED guidelines for RF exposure. This equipment must be installed and operated with a minimum distance of 20 cm between the radiation source and your body.

For Canada only: This equipment complies with FCC and ISED radiation exposure limits established for an uncontrolled environment, the FCC guidelines for RF exposure and RSS Standard 102 of the ISED guidelines for RF exposure. This equipment must be installed and operated with a minimum distance of 20 cm between the radiation source and your body.

VIETNAM

REGULATORY RADIO IDENTIFIERS

Manufacturer	Model designation	Radio equipment approval number
Continental ADC	ARS4-A (radar sensor)	SUNTECH VN C00082015
Continental ADC	ARS6-A (radar sensor)	SUNTECH VN C00082015
Continental ADC	ARS4-C (radar sensor)	SUNTECH VN C00082015
Bosch	FR5CPCCF (radar sensor)	SUNTECH VN C00082015
Bosch	MRR1Rear (radar sensor)	SUNTECH VN C00082015
Bosch	MRRe14FCR (radar sensor)	SUNTECH VN C00082015
Continental Antenna	RKE213E1 (aerial amplifier)	Suntech Vietnam Technology Company Limited C0274151118AF04A2
Continental Antenna	RKE223E1GNS (aerial amplifier)	CÔNG TY TNHH MERCEDES-BENZ, Mercedes-Benz Vietnam, Company Limited B0676160424AF03A3
Continental Automotive	CMKG1 (locking system)	Suntech Vietnam Technology Company Limited C0001070120AF04A2
Continental Automotive	CMKG2 (locking system)	Mercedes-Benz Vietnam Company Limited C0104060423AF04A3
Continental Automotive	MARS Keyless (locking system)	Mercedes-Benz Vietnam Company Limited B0748240419AF04A2
Continental Automotive	UWBTRX1 (locking system)	Mercedes-Benz Vietnam B00172019
HELLA	DM4 (locking system)	Mercedes-Benz Vietnam Company Limited CO204030321AF04A3
HELLA	RS6 (locking system)	SUNTECH VN C00082015
Hirschmann	920702A (locking system)	Mercedes-Benz Vietnam Company Limited B0424070422AF04A3
Huf Baolong	TSSRE4A (tyre pressure sensor)	C0112200717AF04A2

Manufacturer	Model designation	Radio equipment approval number
HUF	HUF13145 (tyre pressure sensor)	C1071050922AF04A3
MARQUARDT	DC12A (locking system)	Suntech Vietnam Technology Company Limited C0208030321AF04A3
MARQUARDT	DC12B (locking system)	Suntech Vietnam Technology Company Limited C0076210121AF04A3
MARQUARDT	DC12K (locking system)	Suntech Vietnam Technology Company Limited C0077210121AF04A3
MARQUARDT	MS2 (locking system)	Suntech Vietnam Technology Company Limited C0075210121AF04A3
MARQUARDT	MS4 (locking system)	Suntech Vietnam Technology Company Limited C0913110821AF04A3
MARQUARDT	MS5 (locking system)	Suntech Vietnam Technology Company Limited C0141140520AF04A2
MARQUARDT	MS6 (locking system)	CÔNG TY TNHH MERCEDES-BENZ Mercedes-Benz Vietnam Company Limited C0471120824AF04A3

Manufacturer	Model designation	Radio equipment approval number
MARQUARDT	MS7 (locking system)	CÔNG TY TNHH MERCEDES-BENZ Mercedes-Benz Vietnam Company Limited C0225240424AE01A3
MARQUARDT	MK1 (locking system)	Suntech Vietnam Technology Company Limited C0049150121AF04A3
MARQUARDT	MK2 (locking system)	Suntech Vietnam Technology Company Limited C0050150121AF04A3
MARQUARDT	MU3 (locking system)	CÔNG TY TNHH MERCEDES-BENZ Mercedes-Benz Vietnam Company Limited C0547201223AF04A3
MARQUARDT	3350.38 (locking system)	Suntech Vietnam Technology Company Limited C0131030221AF04A3
Schrader	AG5SP4 (tyre pressure sensor)	Suntech Vietnam Technology Company Limited C0002050119AF042A
Schrader	AG3PF4 (tyre pressure sensor)	Suntech Vietnam Technology Company Limited C0120220519AF04A2

Manufacturer	Model designation	Radio equipment approval number
Schrader	GG4T (tyre pressure sensor)	Suntech Vietnam Technology Company Limited C0170191017AF04A2
Schrader	DG6W2D4 (tyre pressure sensor)	Suntech Vietnam Technology Company Limited C0078070518AF04A2
Valeo	ARTEMIS-SUB-01 (locking system)	CÔNG TY TNHH MERCEDES-BENZ Mercedes-Benz Vietnam Company Limited C0931270624AF03A3
Veoneer	77GHz MMRV1 (radar sensor)	Mercedes-Benz Vietnam Company Limited
Veoneer	77V12BSM (radar sensor)	Mercedes-Benz Vietnam Company Limited
Veoneer	77V12CRN (radar sensor)	Mercedes-Benz Vietnam Company Limited
Veoneer	77V125CRN (radar sensor)	Mercedes-Benz Vietnam Company Limited
WITTE-Velbert	SDHTAG3NFC (locking system)	Mercedes-Benz Vietnam Company Limited A0847130820AF04A3

Information on the specific absorption rate (SAR)

INFORMATION ON THE SPECIFIC ABSORPTION RATE

The values have been determined and tested in accordance with the Décret n° 2019-1186 guideline relating to details of the specific absorption rate (SAR) of wireless vehicle components.

Further information and updates are available at the following website:

https://regulatoryradioinformation.corpinter.net/en

INFORMATION ON THE SPECIFIC ABSORPTION RATE

Vehicle components	SAR value in W/kg	Applicable limit value
D-WMI2020A	0.018 W/kg	4 W/kg
Gen20x.i2 LS3+	2.2 W/kg	4 W/kg
Gen20x.i2 LS4+	2.5 W/kg	4 W/kg
ARTEMIS communication module	0.471 W/kg	2 W/kg
HERMES communication module	< 0.4 W/kg	2 W/kg
RAMSES communication module	0.036 W/kg	2 W/kg
ECE DE003 & ECE DE004 compensators	< 0.2 W/kg	2 W/kg
NRCS2P	0.003 W/kg	2 W/kg
NTG6	0.199 W/kg	4 W/kg
NTG7	0.08 W/kg	2 W/kg
NTG7RSU	0.07 W/kg	2 W/kg
SM-T230NZ tablet PC	0.7 W/kg	4 W/kg
Radio data transmission telephone system	0.24 W/kg	2 W/kg

Importer information for regulatory radio components

FOR MOLDOVA ONLY:
Importer

S.C. GRAND PREMIUM S.R.L. Moldova

mun. Chisinau, str. Hîncesti sos., 2/2

FOR TURKEY ONLY:
Importer

Mercedes Benz Otomotiv Ticaret ve Hizmetler A.Ş. Genel Merkez

Akçaburgaz Mah. Süleyman Şah Cad. No: 6/1

34522 Esenyurt/İstanbul

FOR UKRAINE ONLY:
Importer

PJSC “AUTOCAPITAL”

Velyka Vasylkivska str. 15/2

01004 Kyiv

Ukraine

FOR THE UNITED KINGDOM ONLY:
Importer

Mercedes-Benz Cars UK Limited

Delaware Drive, Tongwell

Milton Keynes, MK15 8BA

England

Importer of Mercedes-Benz vans

Mercedes-Benz Vans UK Limited

Delaware Drive, Tongwell

Milton Keynes, MK15 8BA

Importer of Mercedes-Benz spare parts

Mercedes-Benz Parts Logistics

Delaware Drive, Tongwell

Milton Keynes, MK15 8BA

England

Further information and updates are available at the following web address:

https://regulatoryradioinformation.corpinter.net/en



Vehicle identification plate, VIN and motor number overview

VEHICLE IDENTIFICATION PLATE

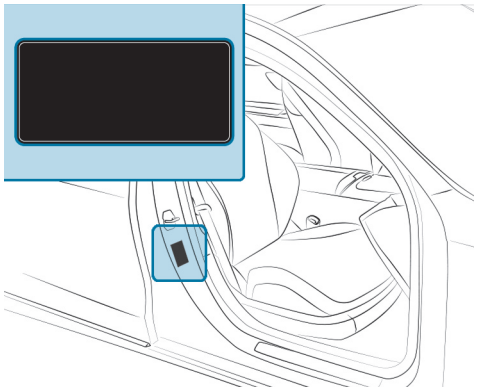

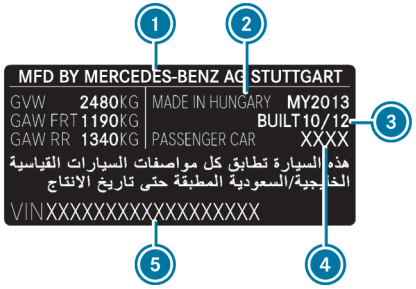

Vehicle identification plate (example: Kuwait)

1. Vehicle manufacturer
2. Place of manufacture
3. Manufacturing date
4. Vehicle model
5. VIN (vehicle identification number)

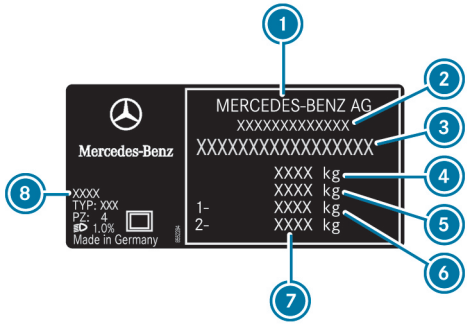

Vehicle identification plate (example: all other countries)

1. Vehicle manufacturer
2. EU general operating permit number (for certain countries only)
3. VIN (vehicle identification number)
4. Permissible gross mass (kg)
5. Permissible gross mass of vehicle combination (kg) (for certain countries only)
6. Maximum permissible front axle load (kg)
7. Maximum permissible rear axle load (kg)
8. Paint code

The data in the illustration is shown as an example.

VIN IN THE ENGINE COMPARTMENT

The VIN can be found on the crossmember in the engine compartment. Further information can be obtained at a qualified specialist workshop.

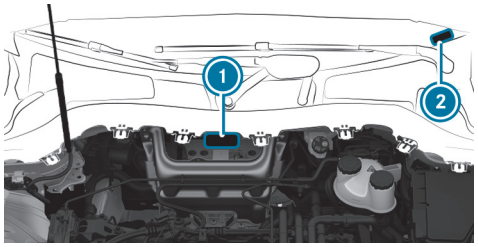

1. Imprinted VIN (vehicle identification number)
2. VIN (vehicle identification number) as a label

MOTOR NUMBER

Further information on motor numbers can be obtained at a qualified specialist workshop.

Operating fluids

Notes on operating fluids

WARNING
Risk of injury due to harmful operating fluids

Operating fluids can be toxic.

- ► When using, storing and disposing of operating fluids, observe the imprints on the respective original containers.
- ► Always keep operating fluids in the sealed original container.
- ► Always keep children away from operating fluids.

ENVIRONMENTAL NOTE
Pollution of the environment due to irresponsible disposal of operating fluids

Incorrect disposal of operating fluids can cause considerable damage to the environment.

- ► Dispose of operating fluids in an environmentally responsible manner.

OPERATING FLUIDS INCLUDE THE FOLLOWING:

- lubricants
- coolant
- brake fluid
- windscreen washer fluid
- climate control system refrigerant

Only use products approved by Mercedes-Benz. Damage to the vehicle caused by the use of products that have not been approved is not covered by the Mercedes-Benz warranty or goodwill gestures.

You can identify operating fluids approved by Mercedes-Benz by the following inscriptions on the container:

- MB-Freigabe (e.g. MB-Freigabe 229.51)
- MB-Approval (e.g. MB-Approval 229.51)

FURTHER INFORMATION ON APPROVED OPERATING FLUIDS IS AVAILABLE AT THE FOLLOWING LOCATIONS:

- in the Mercedes-Benz Specifications for Operating Fluids in accordance with the details on the label
  - at https://operatingfluids.mercedes-benz.com
- at a qualified specialist workshop

Notes on brake fluid

Observe the notes on operating fluids (⟶ page 739).

WARNING
Risk of an accident due to vapour pockets forming in the brake system

The brake fluid constantly absorbs moisture from the air. This lowers the boiling point of the brake fluid. If the boiling point is too low, vapour pockets may form in the brake system when the brakes are applied hard.

This impairs the braking effect.

► Have the brake fluid renewed at the specified intervals.

Have the brake fluid regularly replaced at a qualified specialist workshop. Only use a brake fluid approved by Mercedes-Benz in accordance with MB-Freigabe or MB-Approval 331.0.

Coolant

NOTES ON COOLANT
Observe the notes on operating fluids (⟶ page 739).

WARNING
Risk of fire- and injury from antifreeze

If antifreeze comes into contact with hot component parts in the engine compartment, it may ignite.

► Allow the drive system to cool down before you top up the antifreeze.

► Make sure that no antifreeze spills out next to the filler opening.

► Thoroughly clean the antifreeze from component parts before starting the vehicle.

NOTE
Damage caused by incorrect coolant

► Only use coolant that has been premixed with the required antifreeze protection.

INFORMATION ON COOLANT IS AVAILABLE AT THE FOLLOWING LOCATIONS:

- In the Mercedes-Benz Specification for Operating Fluids 320.1
  - At https://operatingfluids.mercedes-benz.com
- At a qualified specialist workshop

NOTE
Overheating at high outside temperatures

If an inappropriate coolant is used, the cooling system is not sufficiently protected against overheating and corrosion at high outside temperatures.

- ► Only use coolant approved for Mercedes-Benz.
- ► Observe the instructions in the Mercedes-Benz Specifications for Operating Fluids 320.1.

Have the coolant regularly replaced at a qualified specialist workshop.

PROPORTION OF ANTIFREEZE CONCENTRATE IN THE ENGINE COOLING SYSTEM:

- A minimum of 50% (antifreeze protection down to about -37°C)
- A maximum of 55% (antifreeze protection down to -45°C)

Notes on windscreen washer fluid

Observe the notes on operating fluids (⟶ page 739).

WARNING
Risk of fire and injury from windscreen washer concentrate

Windscreen washer concentrate is highly flammable. If it comes into contact with hot components, it may ignite.

- ► Make sure that windscreen washer concentrate is not spilled near to the filler opening.

NOTE
Damage to the exterior lighting due to unsuitable windscreen washer fluid

Unsuitable windscreen washer fluids may damage the plastic surface of the exterior lighting.

- ► Only use windscreen washer fluids which are also suitable for use on plastic surfaces, e.g. MB SummerFit or MB WinterFit.

NOTE
Blocked spray nozzles caused by mixing windscreen washer fluids

- ► Do not mix MB SummerFit and MB WinterFit with other windscreen washer fluids.

Do not use distilled or de-ionised water. Otherwise, the fill level sensor may be triggered erroneously.

RECOMMENDED WINDSCREEN WASHER FLUID:

- above freezing point: e.g. MB SummerFit
- below freezing point: e.g. MB WinterFit

For the correct mixing ratio, refer to the information on the antifreeze container.

Mix washer fluid with windscreen washer fluid all year round.

Refrigerant

NOTES ON REFRIGERANT
The climate control system contains fluorinated greenhouse gases.

Observe the notes on operating fluids (⟶ page 739).

Only for EU and EFTA countries according to EU Directive 573/2024:

> **NOTE**
> Damage due to incorrect refrigerant
>
> If a non-approved refrigerant is used, the climate control system may be damaged.
>
> ► Use only R-1234yf refrigerant.

Work on the climate control system may only be carried out at a qualified specialist workshop. Ensure that all applicable specifications are observed in this regard.

The information label for the climate control system is located inside the bonnet or at the front of the engine compartment.

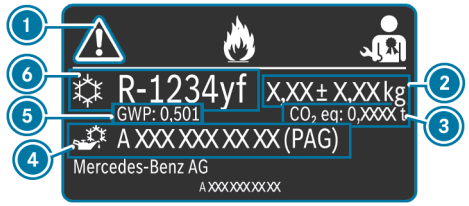

Information label (example - EU countries only)
1 Hazard and service warning symbols
2 Refrigerant filling quantity
3 CO_2 equivalent of the refrigerant used
4 PAG oil part number
5 GWP value (Global Warming Potential) of the refrigerant used
6 Refrigerant type

THE SYMBOLS 1 INDICATE THE FOLLOWING:

- Potential dangers
- Servicing work to be carried out at a qualified specialist workshop

INFORMATION ON REFRIGERANT
Only for EU and EFTA countries according to EU Directive 573/2024:

Refrigerant filling quantity	CO_2 equivalent*
0.5 - 2.0 ± 0.01 kg	0.0003 - 0.0010 t

*The CO_2 equivalent is calculated based on the filling quantity using the following formula: CO_2 equivalent (t) = Refrigerant filling quantity × GWP/1000.

> The filling quantity applicable to the vehicle depends on the respective equipment. The filling quantity for your vehicle can be obtained from the information label for the climate control system on the inside of the bonnet.

Vehicle data

Vehicle dimensions

THE HEIGHTS SPECIFIED MAY VARY AS A RESULT OF THE FOLLOWING FACTORS:

- Tyres
- Load
- Condition of the suspension
- Special equipment

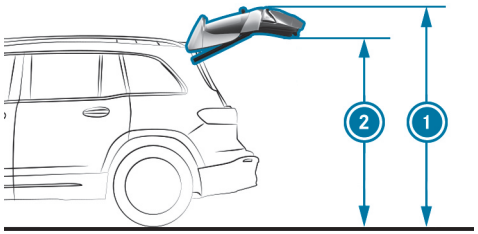

Missing values were not yet available at the time of going to press.

HEIGHT WHEN OPEN AND HEADROOM

Model	Height when open	Headroom
EQB 250+	2095 mm	1923 mm
All other models	2098 mm	1926 mm

VEHICLE DIMENSIONS

All models	
Vehicle length	4684 mm
Vehicle width including outside mirrors	2020 mm
Vehicle width excluding outside mirrors	1834 mm
Wheelbase	2829 mm

VEHICLE HEIGHT

Model	
EQB 250+	1654 mm
All other models	1689 mm

Weights and loads

PLEASE OBSERVE THE FOLLOWING NOTES FOR THE SPECIFIED VEHICLE DATA:

- Items of special equipment increase the kerb weight and reduce the payload.
- Vehicle-specific weight information can be found on the vehicle identification plate (⟶ page 737).

ROOF LOAD

Model	Maximum roof load
All models	75 kg

Maximum design speeds

The maximum design speed can differ from the stated figures in practice. It depends on the operating conditions, the special equipment and the size of the tyres.

Missing values were not available by the editorial deadline.

MAXIMUM DESIGN SPEED

Model
All models

High-voltage battery

NOTES ON THE ENERGY SUPPLY FOR VEHICLES WITH HIGH-VOLTAGE BATTERY

In accordance with European standard EN 17186:2019, vehicle identifiers are located on the vehicle in the following places:

- On the inside of the socket flap
- On the charging cable connector

In addition, charging stations in European countries are equipped with energy supply identifiers. You can recharge your vehicle at charging stations whose charging station identifier corresponds to the vehicle identifier.

For further information on charging the high-voltage battery, refer to the "Charging the high-voltage battery" section (→ page 312).



1. Supply type: AC
   Standard: EN 62196-2
   Design: type 2
   Plug type: charging cable socket and vehicle plug
   Voltage range: 480 V RMS
2. Supply type: DC
   Standard: EN 62196-3
   Design: FF
   Plug type: charging cable socket and vehicle plug
   Voltage range: 50 V to 500 V
3. Supply type: DC
   Standard: EN 62196-3
   Design: FF
   Plug type: charging cable socket and vehicle plug
   Voltage range: 200 V to 920 V

Missing values were not yet available at the time of going to press.

ENERGY CONTENT AND CHARGING TIMES (EQB 300 4MATIC)

EQB 300 4MATIC	
Type	Lithium-ion
Usable energy content	70.5 kWh
Range	
Charging time – mode 4 with a maximum charging capacity of 100 kW	approx. 35 min
Charging time – mode 3 with 11 kW charging capacity (depending on the vehicle's construction state)	approx. 7 h 15 min
Charging time – mode 3 with 7.4 kW charging power (depending on the condition of the vehicle body), single phase	Approx. 10 h 45 min

ENERGY CONTENT AND CHARGING TIMES (ALL OTHER MODELS)

All other models	
Type	Lithium-ion
Usable energy content	70.5 kWh
Range	
Charging time – mode 4 with a maximum charging capacity of 100 kW	approx. 35 min
Charging time – mode 3 with 11 kW charging capacity (depending on the vehicle's construction state)	approx. 7 h 15 min
Charging time – mode 3 with 7 kW charging capacity (depending on the vehicle's construction state)	Approx. 10 h 45 min
Charging time – mode 3 with 7.4 kW charging power (depending on the condition of the vehicle body), single phase	Approx. 10 h 45 min

Mode 3 charging time – applies to AC charging from 0 % to 100 % of the usable energy content. Mode 4 charging time – applies to DC charging from 10 % to 80 % of the usable energy content.

The time it takes to charge the battery depends on the state of health of the battery, the ambient temperature and the charging power of the battery. The charging capacity, in turn, depends on the supply voltage, the current and the type of power supply.

The rated voltage range for your vehicle can be found on the information label in the socket flap (⟶ page 312).

Trailer hitch

General notes on the trailer coupling

Modifications to the cooling system may be necessary, depending on the vehicle model. The retrofitting of a trailer hitch is only permissible if a towing capacity is specified in your vehicle documents.

Further information can be obtained at a qualified specialist workshop.

Mounting dimensions of the trailer hitch

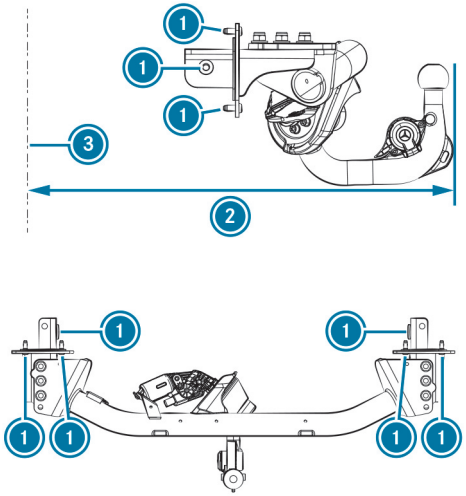

1 Attachment points
2 Overhang dimension
3 Rear axle centre line

The overhang dimension and attachment points are valid for a trailer hitch installed at the factory.

Missing values were not available by the editorial deadline.

OVERHANG DIMENSION, LENGTH

Model	Overhang dimension
All models	

Trailer load

The tongue weight is not included in the trailer load.
The values for the **trailer load, braked** apply with a minimum start-off gradeability of 12 %.

Missing values were not available by the editorial deadline.

TRAILER LOAD, BRAKED

Model
All models

TRAILER LOAD, UNBRAKED

Model
All models

Maximum tongue weight- and load capacity

NOTE
Damage caused by the trailer coming loose

If the tongue weight used is too low, the trailer may come loose.

- The tongue weight must not be below 50 kg.
- Use a tongue weight that is as close as possible to the maximum permissible tongue weight.

NOTE
Damage caused by the bicycle rack coming loose

When using a bicycle rack, both the maximal tongue weight and the maximal load capacity should be observed.

- Do not exceed the permissible load capacity.

Observe the additional notes on the maximum load capacity (⟶ page 418).

Missing values were not available by the editorial deadline.

TONGUE WEIGHT

Model	Maximum tongue weight
All models	

LOAD CAPACITY

All models	Maximum load capacity
When attaching the bicycle rack to the ball head	75 kg

Permissible rear axle load (trailer operation)

Missing values were not yet available at the time of going to press.

TRAILER OPERATION AXLE LOAD

Model	Axle load
All models	

Display messages and warning/indicator lamps

This interactive PDF works like a website – tap or click a button to jump straight to where you want to go.
You can return here at any time via the navigation bar at the top left.

Display messages
Warning and indicator lamps

Display messages

Introduction

INFORMATION ABOUT DISPLAY MESSAGES
Display messages appear on the driver display.

Display messages with graphical symbols are simplified in the Owner's Manual and may differ from the symbols on the driver display. The driver display shows high-priority display messages in red. Certain display messages will be accompanied by a warning tone.

Follow the notifications in the display messages and observe the additional information in this Owner's Manual.

SYMBOLS WILL ALSO BE SHOWN WITH SOME DISPLAY MESSAGES:

- ⓘ Further information
- × Hide display message

You can select the respective symbol by swiping left or right on the left-hand Touch Control. Press ⓘ to display further information on the central display. Press × to hide the display message.

You can hide display messages to be acknowledged by pressing the back button ↩ or with the left-hand Touch Control. The display messages will then be stored in the message memory.

Rectify the cause of a display message as quickly as possible.

High-priority display messages cannot be hidden. The driver display will show these display messages continuously until the cause of the display message has been rectified.

CALLING UP SAVED DISPLAY MESSAGES
Driver display:

→ Service

The Message memory: XXmessage appears on the driver display.

- Scroll through the display messages by swiping upwards or downwards on the left-hand Touch Control.
- **To exit the display:** press the ↩ back button.

Occupant safety

Display messages	Possible causes/consequences and ▶ Solutions
 Restraint system malfunction Consult workshop	* The restraint system is malfunctioning (⟶ page 122).
 Front left malfunction Consult workshop	* The restraint system is malfunctioning (⟶ page 122).

DANGER
Risk of fatal injuries due to restraint system malfunctions

Components in the restraint system may be activated unintentionally or not deploy as planned in an accident. In the event of an accident, the high-voltage on-board electrical system may not be deactivated as intended.

You may suffer an electric shock if you touch the damaged components of the high-voltage on-board electrical system.

- ▶ Have the restraint system checked and repaired immediately at a qualified specialist workshop.
- ▶ After an accident, switch off the vehicle immediately.

DETECTION OF A RESTRAINT SYSTEM FAULT:

- The restraint system warning lamp does not light up when the vehicle is switched on
- The restraint system warning lamp lights up continuously or repeatedly during a journey.

▶ Consult a qualified specialist workshop immediately.

Display messages	Possible causes/consequences and ▶ Solutions

DANGER
Risk of fatal injuries due to restraint system malfunctions

Components in the restraint system may be activated unintentionally or not deploy as planned in an accident. In the event of an accident, the high-voltage on-board electrical system may not be deactivated as intended.

You may suffer an electric shock if you touch the damaged components of the high-voltage on-board electrical system.

- ▶ Have the restraint system checked and repaired immediately at a qualified specialist workshop.
- ▶ After an accident, switch off the vehicle immediately.

DETECTION OF A RESTRAINT SYSTEM FAULT:

- The restraint system warning lamp does not light up when the vehicle is switched on
- The restraint system warning lamp lights up continuously or repeatedly during a journey.

▶ Consult a qualified specialist workshop immediately.



Front right malfunction Consult workshop

* The restraint system is malfunctioning (⟶ page 122).

WARNING
Risk of injury due to malfunctions in the restraint system

Components in the restraint system may be activated unintentionally or not deploy as intended in an accident.

- ▶ Have the restraint system checked and repaired immediately at a qualified specialist workshop.

Display messages	Possible causes/consequences and ▶ Solutions

DANGER
Risk of fatal injuries due to restraint system malfunctions

Components in the restraint system may be activated unintentionally or not deploy as planned in an accident. In the event of an accident, the high-voltage on-board electrical system may not be deactivated as intended.

You may suffer an electric shock if you touch the damaged components of the high-voltage on-board electrical system.

- ▶ Have the restraint system checked and repaired immediately at a qualified specialist workshop.
- ▶ After an accident, switch off the vehicle immediately.

DETECTION OF A RESTRAINT SYSTEM FAULT:

- The restraint system warning lamp does not light up when the vehicle is switched on
- The restraint system warning lamp lights up continuously or repeatedly during a journey.

▶ Consult a qualified specialist workshop immediately.



Second row of seats, left Malfunction
Consult workshop

* The restraint system is malfunctioning (⟶ page 122).

WARNING
Risk of injury due to malfunctions in the restraint system

Components in the restraint system may be activated unintentionally or not deploy as intended in an accident.

- ▶ Have the restraint system checked and repaired immediately at a qualified specialist workshop.

Display messages	Possible causes/consequences and ▶ Solutions

DANGER
Risk of fatal injuries due to restraint system malfunctions

Components in the restraint system may be activated unintentionally or not deploy as planned in an accident. In the event of an accident, the high-voltage on-board electrical system may not be deactivated as intended.

You may suffer an electric shock if you touch the damaged components of the high-voltage on-board electrical system.

- ▶ Have the restraint system checked and repaired immediately at a qualified specialist workshop.
- ▶ After an accident, switch off the vehicle immediately.

DETECTION OF A RESTRAINT SYSTEM FAULT:

- The restraint system warning lamp does not light up when the vehicle is switched on
- The restraint system warning lamp lights up continuously or repeatedly during a journey.

▶ Consult a qualified specialist workshop immediately.



Second row of seats, right Malfunction
Consult workshop

* The restraint system is malfunctioning (⟶ page 122).

WARNING
Risk of injury due to malfunctions in the restraint system

Components in the restraint system may be activated unintentionally or not deploy as intended in an accident.

- ▶ Have the restraint system checked and repaired immediately at a qualified specialist workshop.

Display messages	Possible causes/consequences and ▶ Solutions

DANGER
Risk of fatal injuries due to restraint system malfunctions

Components in the restraint system may be activated unintentionally or not deploy as planned in an accident. In the event of an accident, the high-voltage on-board electrical system may not be deactivated as intended.

You may suffer an electric shock if you touch the damaged components of the high-voltage on-board electrical system.

- ▶ Have the restraint system checked and repaired immediately at a qualified specialist workshop.
- ▶ After an accident, switch off the vehicle immediately.

DETECTION OF A RESTRAINT SYSTEM FAULT:

- The restraint system warning lamp does not light up when the vehicle is switched on
- The restraint system warning lamp lights up continuously or repeatedly during a journey.

▶ Consult a qualified specialist workshop immediately.



Third row of seats, left Malfunction Consult workshop

* The restraint system on the third seat row, left, is malfunctioning (⟶ page 122).

WARNING
Risk of injury due to malfunctions in the restraint system

Components in the restraint system may be activated unintentionally or not deploy as intended in an accident.

- ▶ Have the restraint system checked and repaired immediately at a qualified specialist workshop.

Display messages	Possible causes/consequences and ▶ Solutions

DANGER
Risk of fatal injuries due to restraint system malfunctions

Components in the restraint system may be activated unintentionally or not deploy as planned in an accident. In the event of an accident, the high-voltage on-board electrical system may not be deactivated as intended.

You may suffer an electric shock if you touch the damaged components of the high-voltage on-board electrical system.

- ▶ Have the restraint system checked and repaired immediately at a qualified specialist workshop.
- ▶ After an accident, switch off the vehicle immediately.

DETECTION OF A RESTRAINT SYSTEM FAULT:

- The restraint system warning lamp does not light up when the ignition is switched on
- The restraint system warning lamp lights up continuously or repeatedly during a journey

▶ Consult a qualified specialist workshop immediately.



Third row of seats, right Malfunction Consult workshop

* The restraint system on the third seat row, right, is malfunctioning (⟶ page 122).

WARNING
Risk of injury due to malfunctions in the restraint system

Components in the restraint system may be activated unintentionally or not deploy as intended in an accident.

- ▶ Have the restraint system checked and repaired immediately at a qualified specialist workshop.

Display messages	Possible causes/consequences and ▶ Solutions

DANGER
Risk of fatal injuries due to restraint system malfunctions

Components in the restraint system may be activated unintentionally or not deploy as planned in an accident. In the event of an accident, the high-voltage on-board electrical system may not be deactivated as intended.

You may suffer an electric shock if you touch the damaged components of the high-voltage on-board electrical system.

- ▶ Have the restraint system checked and repaired immediately at a qualified specialist workshop.
- ▶ After an accident, switch off the vehicle immediately.

DETECTION OF A RESTRAINT SYSTEM FAULT:

- The restraint system warning lamp does not light up when the ignition is switched on
- The restraint system warning lamp lights up continuously or repeatedly during a journey

▶ Consult a qualified specialist workshop immediately.



Left window airbag malfunction Consult workshop

* The restraint system is malfunctioning (⟶ page 122).

WARNING
Risk of injury or fatal injury due to a malfunction in the windowbag

The windowbag might be triggered unintentionally or might not be triggered at all in the event of an accident.

- ▶ Have the windowbag checked and repaired immediately at a qualified specialist workshop.

▶ Consult a qualified specialist workshop immediately.

Display messages	Possible causes/consequences and ▶ Solutions
 Right window airbag malfunction Consult workshop	* The restraint system is malfunctioning (⟶ page 122). **WARNING** Risk of injury or fatal injury due to a malfunction in the windowbag The windowbag might be triggered unintentionally or might not be triggered at all in the event of an accident. ► Have the windowbag checked and repaired immediately at a qualified specialist workshop. ► Consult a qualified specialist workshop immediately.
Front passenger airbag disabled See Owner's Manual	* The front passenger airbag has been disabled even though an adult, or an individual of adult build is occupying the front passenger seat. If additional forces are applied to the seat, the weight the system detects may be too low. **WARNING** Risk of injury- or fatalities if the front passenger airbag is deactivated If the front passenger airbag is deactivated, it will not be released in the event of an accident and can not therefore provide the protection for which it is designed. An occupant on the front passenger seat may then collide with parts of the vehicle interior, forexample, in particular if they are sitting too close to the cockpit. ► Ensure correct status of the front passenger airbag both prior to and during the journey. ► Stop the vehicle immediately in accordance with the traffic conditions. ► Ensure that no objects are trapped under the front passenger seat. ► Check the status of automatic front passenger airbag shutoff (⟶ page 124). ► If necessary, consult a qualified specialist workshop immediately.

Display messages	Possible causes/consequences and ▶ Solutions
Front passenger airbag enabled See Owner's Manual	* **THE FRONT PASSENGER AIRBAG WILL BE ENABLED WHILE THE VEHICLE IS IN MOTION IN THE FOLLOWING SITUATIONS:** • Even when a child, a small adult or an object weighing less than the system weight threshold is located on the front passenger seat. • Even when the front passenger seat is not occupied. The system may detect objects or forces that are adding to the weight applied to the seat. **WARNING** Risk of injury or death when using a child restraint system while the front passenger airbag is enabled If you secure a child in a child restraint system on the front passenger seat and the front passenger airbag is enabled, the front passenger airbag can deploy in the event of an accident. The child could be struck by the airbag. ► Ensure, both before and during the journey, that the status of the front passenger airbag is correct. NEVER use a rearward facing child restraint on a seat protected by an ACTIVE AIRBAG in front of it, DEATH or SERIOUS INJURY to the CHILD can occur. ► Stop the vehicle immediately in accordance with the traffic conditions. ► Ensure that no objects are trapped under the front passenger seat. ► Check the status of automatic front passenger airbag shutoff (⟶ page 124). ► If necessary, consult a qualified specialist workshop immediately.
Occupant presence reminder inoperative	* The passive occupant presence reminder is faulty. ► Consult a qualified specialist workshop.

Display messages	Possible causes/consequences and ▶ Solutions
 Do not leave persons or animals in the vehicle	* The passive occupant presence reminder assumes that persons or animals are present in the rear of the vehicle. ▶ Do not leave any persons or animals in the vehicle after exiting the vehicle.

Key

Display messages	Possible causes/consequences and ▶ Solutions
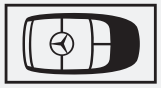 Change key batteries	* The key battery is discharged. ▶ Change the battery (⟶ page 173).
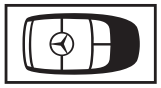 Key not detected (white display message)	* The key is currently undetected. ▶ Change the location of the key in the vehicle. ▶ Try to start the vehicle. ▶ If the key is still not detected, place it in the slot for starting with the key (⟶ page 293). ▶ Start the vehicle.
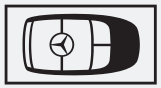 Key not detected (red display message)	* The key can no longer be detected during a journey and may no longer be in the vehicle. **IF THE KEY IS NO LONGER IN THE VEHICLE AND YOU SWITCH OFF THE VEHICLE:** • You will no longer be able to start the vehicle. • You will not be able to lock the vehicle centrally. ▶ Ensure that the key is in the vehicle.

Display messages	Possible causes/consequences and ▶ Solutions
	If the key is in the vehicle and is still not detected: ▶ Stop the vehicle immediately in accordance with the traffic conditions. ▶ Place the key in the marked space for starting the vehicle with the key (⟶ page 293). The key battery is at low capacity or is flat. ▶ Check the battery via the indicator lamp (⟶ page 170). ▶ Replace the key battery as necessary (⟶ page 173).
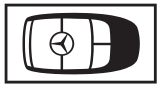 Key being taught in Please wait	* The vehicle is processing in order to teach in the new key. ▶ Wait until processing is complete.
Place the key in the marked space See Owner's Manual	* Key detection is malfunctioning. ▶ Change the location of the key in the vehicle. ▶ Place the key in the marked space for starting the vehicle with the key (⟶ page 293).
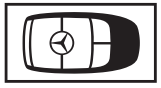 Replace key	* Have the key replaced. ▶ Consult a qualified specialist workshop.

Lights

Display messages	Possible causes/consequences and ▶ Solutions
 Malfunction See Owner's Manual	* The exterior lighting is malfunctioning. ▶ Consult a qualified specialist workshop. * **Vehicles with a trailer hitch:** a fuse may have blown. ▶ Stop the vehicle in accordance with the traffic conditions. ▶ Check the fuses and replace them if necessary (⟶ page 58).
 Automatic driving lights inoperative	* The light sensor for automatic driving lights is malfunctioning. ▶ Consult a qualified specialist workshop.
 Switch on headlamps	* You are driving without low beam headlamps. ▶ Turn the light switch to the ≡D or AUTO position.
 Switch off lights	* You are leaving the vehicle and the lights are still switched on. ▶ Turn the light switch to the AUTO position.
Adaptive Highbeam Assist currently unavailable See Owner's Manual	* Adaptive Highbeam Assist is temporarily unavailable. The system limits have been reached (⟶ page 266). The system will become available again when the cause of the problem is rectified. The Adaptive Highbeam Assist available again display message will appear. ▶ Continue driving. ▶ Operate the main beam manually until Adaptive Highbeam Assist becomes available once again.
Adaptive Highbeam Assist inoperative	* Adaptive Highbeam Assist is malfunctioning.

Display messages	Possible causes/consequences and ▶ Solutions
	▶ Continue driving. or ▶ Stop the vehicle in accordance with the traffic conditions and restart the vehicle. ▶ If the display message does not disappear, consult a qualified specialist workshop. ▶ Until then, operate the high beam manually.
 Front left parking lights	* The front left parking light is malfunctioning. ▶ Consult a qualified specialist workshop.
 Front right parking lights	* The front right parking light is malfunctioning. ▶ Consult a qualified specialist workshop.
 Left low beam	* The left low beam is malfunctioning. ▶ Consult a qualified specialist workshop.
 Right low beam	* The right low beam is malfunctioning. ▶ Consult a qualified specialist workshop.
 Left cornering light	* The left cornering light is malfunctioning. ▶ Consult a qualified specialist workshop.

Display messages	Possible causes/consequences and ▶ Solutions
 Right cornering light	* The right cornering light is malfunctioning. ▶ Consult a qualified specialist workshop.
 Left main beam	* The left high beam is malfunctioning. ▶ Consult a qualified specialist workshop.
 Right main beam	* The right high beam is malfunctioning. ▶ Consult a qualified specialist workshop.
 Left daytime running lights	* The left daytime running lights are malfunctioning. ▶ Consult a qualified specialist workshop.
 Right daytime running lights	* The right-hand daytime running lights are malfunctioning. ▶ Consult a qualified specialist workshop.
 Front left turn signal	* The front left turn signal lamp is malfunctioning. ▶ Consult a qualified specialist workshop.
 Rear left turn signal	* The rear left turn signal lamp is malfunctioning. ▶ Consult a qualified specialist workshop.

Display messages	Possible causes/consequences and ▶ Solutions
 Front right turn signal	* The front right turn signal lamp is malfunctioning. ▶ Consult a qualified specialist workshop.
 Rear right turn signal	* The rear right turn signal lamp is malfunctioning. ▶ Consult a qualified specialist workshop.
 Left mirror turn signal	* The turn signal lamp on the left mirror is malfunctioning. ▶ Consult a qualified specialist workshop.
 Right mirror turn signal	* The turn signal lamp on the right mirror is malfunctioning. ▶ Consult a qualified specialist workshop.
 Left brake lamp	* The left brake light is malfunctioning. ▶ Consult a qualified specialist workshop.
 Right brake lamp	* The right brake light is malfunctioning. ▶ Consult a qualified specialist workshop.
 Third brake lamp	* The third brake light is malfunctioning. ▶ Consult a qualified specialist workshop.

Display messages	Possible causes/consequences and ▶ Solutions
 Reversing light	* The reversing light is malfunctioning. ▶ Consult a qualified specialist workshop.
 Rear fog light	* The rear fog light is malfunctioning. ▶ Consult a qualified specialist workshop.
 Number plate lamp	* The number plate lamp is malfunctioning. ▶ Consult a qualified specialist workshop.
 Trailer left turn signal	* The left turn signal lamp on the trailer is malfunctioning. ▶ Consult a qualified specialist workshop.
 Trailer right turn signal	* The right turn signal lamp on the trailer is malfunctioning. ▶ Consult a qualified specialist workshop.
 Trailer brake lamp	* The brake light on the trailer is malfunctioning. ▶ Consult a qualified specialist workshop.
 Trailer tail light	* A tail light on the trailer is malfunctioning. ▶ Consult a qualified specialist workshop.

Display messages	Possible causes/consequences and ▶ Solutions
Hazard warning lamp system Malfunction	* The hazard warning switch is malfunctioning. ▶ Consult a qualified specialist workshop.
Inoperative indicator lamp in driver display. Consult workshop	* An indicator lamp on the driver display is defective. ▶ Consult a qualified specialist workshop.

Climate control

Display messages	Possible causes/consequences and ▶ Solutions
 Currently unavailable High-voltage battery charging incomplete.	* The high-voltage battery is charging. Pre-entry climate control cannot be switched on. ▶ Wait until the charging process has achieved a minimum state of charge.
 Currently unavailable Charge high-voltage battery	* The charge of the high-voltage battery is too low. Pre-entry climate control cannot be switched on. ▶ Charging the high-voltage battery (⟶ page 312).
 Pre-entry climate control via key available again after starting vehicle	* You have attempted to switch on pre-entry climate control more than three times with the vehicle switched off. ▶ Start the vehicle for ten seconds. Pre-entry climate control is operational again.
 Pre-entry climate control via key currently unavailable. High-voltage battery low	* The charge of the high-voltage battery is too low. Pre-entry climate control cannot be switched on. ▶ Charge the high-voltage battery (⟶ page 312). Pre-entry climate control will become operational again when the high-voltage battery is sufficiently charged.

Drive system

Display messages	Possible causes/consequences and ▶ Solutions
 Cooling system malfunction Stop immediately Switch off the vehicle	* The coolant is too hot. ▶ Stop the vehicle immediately in accordance with the traffic conditions and switch off the drive system. **⚠ WARNING** Risk of injury due to overheated vehicle **IF YOU OPEN THE BONNET IN THE EVENT OF AN OVERHEATED VEHICLE OR FIRE IN THE ENGINE COMPARTMENT, THE FOLLOWING SITUATIONS MAY OCCUR:** • You may come into contact with hot gases. • You may come into contact with other escaping hot operating fluids. ▶ In the event of overheating or fire in the engine compartment, keep the bonnet closed and call the fire service. ▶ Allow the overheated vehicle to cool down first if you need to open the bonnet. ▶ Wait until the drive system has cooled down. ▶ Ensure that the air supply to the vehicle radiator is not obstructed. ▶ Avoiding high loads on the drive system, drive to the nearest qualified specialist workshop.
 Towing not permitted See Owner's Manual	* The drive system is malfunctioning. ▶ Have the vehicle transported using only a transporter or trailer (⟶ page 639).

Display messages	Possible causes/consequences and ▶ Solutions
 Acoustic presence indicator inoperative	* The sound generator (acoustic vehicle alerting system) is malfunctioning. No vehicle noises are being produced. The vehicle may not be heard by other road users. ▶ Drive with utmost caution. ▶ Consult a qualified specialist workshop.
To switch off the vehicle, press the Start/ Stop button for at least 3 seconds or 3 times	* You have pressed the start/stop button while the vehicle is in motion. ▶ To switch off the drive system while the vehicle is in motion (⟶ page 291).
Cannot start vehicle See Owner's Manual	* It is not possible to start the vehicle. A malfunction has occurred in the drive system. ▶ Switch off and lock the vehicle. ▶ After waiting for a short time, unlock the vehicle and start it again. ▶ If the display message appears again and the vehicle does not start, consult a qualified specialist workshop.
 Top up coolant See Owner's Manual	* The coolant level is too low. **NOTE** Damage to the drive system due to insufficient coolant ▶ Avoid long journeys with insufficient coolant. ▶ Have the cooling system of the drive system checked at a qualified specialist workshop.
	* The cooling system has detected a component fault. ▶ Avoiding high loads on the drive system, drive to the nearest qualified specialist workshop.

Display messages	Possible causes/consequences and ▶ Solutions
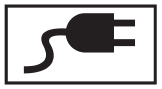 Charger cable connected	* You cannot pull away while the charging cable is connected. ▶ Disconnect the charging cable from the vehicle.
Not possible to unlock charging cable See Owner's Manual	* The charging cable connector cannot be removed from the vehicle socket. ▶ If the charging cable is under strain, relieve the strain on the charging cable connector by carefully pulling on the charging cable. ▶ Press the charging interruption button (⟶ page 326). If the charging cable connector cannot be subsequently removed: ▶ Consult a qualified specialist workshop.
Vehicle not currently being charged Try a different charging station	* A malfunction has occurred in the charging station or the RFID card is not recognised. ▶ Start the charging process at a different charging station. or ▶ Use an alternative authentication method or payment method.
Charging fault Please change charging method See Owner's Manual	* A temporary malfunction has occurred in the charging station. ▶ Wait until the malfunction has passed. or ▶ Start the charging process at a different charging station. or ▶ Use an alternative authentication method or payment method.
AC charging inoperative Consult workshop	* The charging process cannot be started due to a malfunction. ▶ Consult a qualified specialist workshop.

Display messages	Possible causes/consequences and ▶ Solutions
DC charging inoperative Consult workshop	* The charging process cannot be started due to a malfunction. ▶ Consult a qualified specialist workshop.
Login failed Change authentication method or charging station	* Plug-and-Charge is not expected to be available at this charging station. ▶ Use an alternative authentication method or payment method. or ▶ Start the charging process at a different charging station.
Reduced drive power See Owner's Manual	* The drive system is outside the normal operating temperature range (e.g. due to extremely low or high outside temperatures). Drive system power output is reduced. The yellow reduced-power warning lamp is lit. Once the operating temperature of the drive system returns to normal (e.g. after a short trip), maximum output will be available once again. The display message and the yellow reduced-power warning lamp will go out. ▶ Continue driving with caution. * The high-voltage battery is not charged sufficiently. Drive system power output is reduced. The yellow reduced-power warning lamp is lit. ▶ Continue driving with caution. ▶ Charge the high-voltage battery immediately. * If the drive system power output is still reduced, there is a fault in the drive system. ▶ Continue driving with caution. ▶ Consult a qualified specialist workshop.
Charge high-voltage battery if the vehicle will be parked for an extended period at low outside temperatures.	* Due to a possible drop in temperature of the high-voltage battery, the starting ability or the range may drop significantly until the vehicle is restarted. ▶ Charging the high-voltage battery (⟶ page 312).

Display messages	Possible causes/consequences and ▶ Solutions
Please wait in READY status Warming battery See Owner's Manual	* Vehicle traction standby is established READY and transmission position P is engaged. The high-voltage battery is warmed up to the operating temperature. This process can take a few minutes, and possibly longer if demisting of the windscreen MAX is activated. The heating process ends when transmission position D is engaged. However, output will be significantly limited in driving operation until the high-voltage battery has reached its operating temperature.
 Battery capacity too low Stop Charge immediately	* The state of charge for the high-voltage battery is so low that it is no longer possible to drive the vehicle. The drive system can no longer be restarted. When the drive system is restarted, the message Battery capacity too low Stop Charge immediately will appear again. ▶ Stop the vehicle immediately in accordance with the traffic conditions. ▶ Charging the high-voltage battery (⟶ page 312).
 Battery overheated Stop. Everybody exit vehicle! Outdoors if possible	* The high-voltage battery has overheated. There is a risk of fire. ▶ Stop the vehicle immediately in accordance with the traffic conditions. ▶ If possible, stop the vehicle in the open air and ensure that all vehicle occupants exit the vehicle. ⓘ Supporting vehicle functions may activate automatically (e.g. the climate control's air-recirculation mode). ▶ Do not continue driving. ▶ In the event of smoke, leave the danger zone and notify the fire service immediately. ▶ Notify a qualified specialist workshop even if there are no external signs of fire.
 Malfunction	* The drive system is malfunctioning. A warning tone will also sound. ▶ Consult a qualified specialist workshop.

Display messages	Possible causes/consequences and ▶ Solutions
 Malfunction Visit workshop	* The drive system is malfunctioning. ▶ Consult a qualified specialist workshop.
Consult workshop without starting the vehicle again	* It is not possible to restart the drive system due to a malfunction. ▶ Do not switch off the drive system; continue driving to the nearest qualified specialist workshop.
Drive malfunction Achievable speed severely limited See Owner's Manual	* The drive system is malfunctioning. Maximum vehicle speed is restricted. ▶ Consult a qualified specialist workshop.
 Reserve level Charge high-voltage battery	* The state of charge for the high-voltage battery has dropped into the reserve range. ▶ Charging the high-voltage battery (⟶ page 312).
 12 V battery See Owner's Manual	* The drive system is off and the state of charge of the 12 V battery is too low. ▶ Switch off electrical consumers that are not required. ▶ Drive for 30 - 60 mins. or ▶ Charge the vehicle at a charging station (⟶ page 312). If the message appears while the vehicle is switched on, this indicates an on-board electrical system malfunction. ▶ Consult a qualified specialist workshop.
 Malfunction	* The drive system is malfunctioning. The output of your vehicle is restricted. ▶ Consult a qualified specialist workshop.

Display messages	Possible causes/consequences and ▶ Solutions
 Stop Switch off the vehicle	* The drive system is malfunctioning. ▶ Stop the vehicle immediately in accordance with the traffic conditions and switch off the drive system. Do not continue driving as the drive system is automatically deactivated. ▶ Do not tow the vehicle; stop towing if necessary. ▶ Consult a qualified specialist workshop.
 Malfunction Visit workshop	* The drive system is malfunctioning. ▶ Consult a qualified specialist workshop.
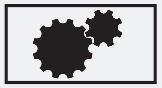 Performance severely limited	* A malfunction has occurred in the high-voltage battery. Output and range will be severely restricted. ▶ Switch off and lock the vehicle. ▶ After waiting for a short time, unlock the vehicle and start it again. If the display message appears again: ▶ Continue driving with caution. ▶ Fully charge the high-voltage battery (⟶ page 312). If the output and range are still reduced, there is a malfunction in the drive system. ▶ Continue driving with caution. ▶ Consult a qualified specialist workshop.
High-voltage battery malfunction. No start in approx. XXX km Consult workshop (yellow display message)	* A malfunction has occurred in the high-voltage battery. It will no longer be possible to start the electric drive system after the distance displayed has been covered.

Display messages	Possible causes/consequences and ▶ Solutions
	▶ Have the necessary maintenance work on the high-voltage battery carried out at a qualified specialist workshop.
High-voltage battery malfunction. No start in approx. XXX km Consult workshop (red display message)	* A malfunction has occurred in the high-voltage battery. It will no longer be possible to start the electric drive system after the distance displayed has been covered. ▶ Have the necessary maintenance work on the high-voltage battery carried out immediately at a qualified specialist workshop.
High-voltage battery malfunction. Consult workshop without starting the vehicle again	* A malfunction has occurred in the high-voltage battery. It will no longer be possible to restart the drive system once it has been switched off. ▶ Do not switch off the drive system; continue driving to the nearest qualified specialist workshop.

Vehicle

Display messages	Possible causes/consequences and ▶ Solutions
Vehicle is ready to drive Shutdown occurs when locked or automatically in a few minutes	* You are exiting the vehicle with vehicle traction standby established. ▶ Exit the vehicle, secure it against rolling away and take the key with you. ▶ If you do not leave the vehicle, switch off the electrical consumers (e.g. the seat heating). Otherwise, the 12-V battery may discharge and starting the engine will then only be possible with the help of a second battery (starting assistance).
 Top up washer fluid	* The washer fluid level in the washer fluid reservoir has dropped below the minimum fill level. ▶ Top up the washer fluid (⟶ page 29).
Wiper Malfunction	* The windscreen wiper is malfunctioning. ▶ Restart the vehicle.

Display messages	Possible causes/consequences and ▶ Solutions
	If the display message does not disappear: ▶ Consult a qualified specialist workshop.
 Trailer coupling Check lock (white display message)	* The trailer hitch is not operational when driving with a trailer. **⚠ WARNING** Risk of an accident if the ball neck is not locked The trailer may become detached. ▶ Stop the vehicle immediately in accordance with the traffic conditions. Do not continue driving. ▶ Uncouple the trailer and secure it against rolling away. ▶ Initiate a new swivelling procedure and do not re-couple the trailer until the display message disappears. ▶ Stop immediately in accordance with the traffic conditions and switch off the vehicle. ▶ Uncouple the trailer and secure it against rolling away. ▶ Initiate a new swivel movement (⟶ page 44). ▶ When the display message disappears, couple up the trailer and continue driving. If the display message does not disappear, the trailer hitch is malfunctioning and the ball neck is not locked. ▶ Do not couple up the trailer. Continue driving without the trailer. Note the reduced ground clearance due to an unlocked ball neck. ▶ Consult a qualified specialist workshop. * When the vehicle is stationary with a coupled trailer, the trailer hitch is not operational. ▶ Uncouple the coupled trailer and secure it against rolling away. ▶ **If the ball neck has been folded in:** unlock the ball neck (⟶ page 44).

Display messages	Possible causes/consequences and ▶ Solutions
	▶ Swivel the ball neck into the end position manually to engage. ▶ **If the ball neck has been folded out:** unlock the ball neck (⟶ page 44). ▶ Swivel the ball neck beneath the bumper manually to engage. If the display message does not disappear, the trailer hitch is malfunctioning and the ball neck is not locked. ▶ Do not couple up the trailer. Continue driving without the trailer. Note the reduced ground clearance due to an unlocked ball neck. ▶ Consult a qualified specialist workshop.
 Trailer coupling Check lock (red display message)	* The trailer hitch is not operational when driving with a trailer. **⚠ WARNING** Risk of an accident if the ball neck is not locked The trailer may become detached. ▶ Stop the vehicle immediately in accordance with the traffic conditions. Do not continue driving. ▶ Uncouple the trailer and secure it against rolling away. ▶ Initiate a new swivelling procedure and do not re-couple the trailer until the display message disappears. ▶ Stop immediately in accordance with the traffic conditions and switch off the vehicle. ▶ Uncouple the trailer and secure it against rolling away. ▶ Initiate a new swivel movement (⟶ page 44). ▶ When the display message disappears, couple up the trailer and continue driving. If the display message does not disappear, the trailer hitch is malfunctioning and the ball neck is not locked.

Display messages	Possible causes/consequences and ▶ Solutions
	▶ Do not couple up the trailer. Continue driving without the trailer. Note the reduced ground clearance due to an unlocked ball neck. ▶ Consult a qualified specialist workshop. * When the vehicle is stationary with a coupled trailer, the trailer hitch is not operational. ▶ Uncouple the coupled trailer and secure it against rolling away. ▶ **If the ball neck has been folded in:** unlock the ball neck (⟶ page 44). ▶ Swivel the ball neck into the end position manually and allow it to engage. ▶ **If the ball neck has been folded out:** unlock the ball neck (⟶ page 44). ▶ Swivel the ball neck beneath the bumper manually and allow it to engage. If the display message does not disappear, the trailer hitch is malfunctioning and the ball neck is not locked. ▶ Do not couple up the trailer. Continue driving without the trailer. Note the reduced ground clearance due to an unlocked ball neck. ▶ Consult a qualified specialist workshop.
Head-up display currently unavailable See Owner's Manual	* **THE HEAD-UP DISPLAY IS TEMPORARILY UNAVAILABLE. POSSIBLE CAUSES:** • Malfunctions in the power supply • Signal interference ▶ Stop in accordance with the traffic conditions and switch the vehicle off and then on again. ▶ If the display message does not disappear, consult a qualified specialist workshop.
Head-up display inoperative	* The head-up display is indicating an internal error. ▶ Consult a qualified specialist workshop.

Display messages	Possible causes/consequences and ▶ Solutions
 Steering malfunction Stop immediately See Owner's Manual	* The steering is malfunctioning. Steering capability is significantly impaired. **WARNING** Risk of accident if steering capability is impaired If the steering does not function as intended, the vehicle's operating safety is jeopardised. ► Pull over and stop the vehicle safely as soon as possible, paying attention to road and traffic conditions. Do not continue driving under any circumstances. ► Consult a qualified specialist workshop. ▶ Stop the vehicle immediately in accordance with the traffic conditions. Do not continue driving. ▶ Consult a qualified specialist workshop.
 Steering malfunction Increased physical effort See Owner's Manual	* The power steering assistance is malfunctioning. **WARNING** Risk of an accident due to altered steering characteristics If the power assistance of the steering fails partially or completely, you will need to use more force to steer. ► If safe steering is possible, drive on carefully. ► Visit or consult a qualified specialist workshop immediately. ▶ If safe steering is possible, continue driving with caution. ▶ Consult or notify a qualified specialist workshop immediately.
Active bonnet malfunction See Owner's Manual	* The active bonnet (pedestrian protection) is malfunctioning or inoperative after having already been triggered. ▶ Consult a qualified specialist workshop.

Display messages	Possible causes/consequences and ▶ Solutions
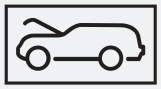	* The bonnet is open. **⚠ WARNING** Risk of accident due to driving with the bonnet unlocked The bonnet may open and block your view. ▶ Never release the bonnet when driving. ▶ Before every trip, ensure that the engine bonnet is locked. ▶ Stop the vehicle immediately in accordance with the traffic conditions. ▶ Close the bonnet.
	* At least one door is open. ▶ Close all doors.
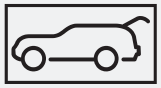	* The tailgate is open. ▶ Close the tailgate.
Anti-theft alarm system Malfunction	* The anti-theft alarm system is malfunctioning. ▶ Consult a qualified specialist workshop.
 2nd seat row, left Not locked	* The left-hand seat or the seat backrest on the second seat row is not engaged. ▶ Fold the corresponding seat backrest back until it engages and/or push the seat row back (⟶ page 215). ▶ Ensure that the seat is engaged (⟶ page 215).

Display messages	Possible causes/consequences and ▶ Solutions
 2nd seat row, right Not locked	* The right-hand seat or the seat backrest on the second seat row is not engaged. ▶ Fold the corresponding seat backrest back until it engages and/or push the seat row back (⟶ page 215). ▶ Ensure that the seat is engaged (⟶ page 215).
 Cannot fold 2nd seat row See Owner's Manual	* The seat backrests on the second seat row cannot be folded forward. ▶ Check the requirements for folding the seat backrests forward on the second seat row (⟶ page 215).
 3rd seat row, left Not locked	* The left-hand seat or the seat backrest on the third seat row is not engaged. ▶ Fold the corresponding seat backrest back until it engages and/or push the seat row back (⟶ page 215). ▶ Ensure that the seat is engaged (⟶ page 215).
 3rd seat row, right Not locked	* The right-hand seat or the seat backrest on the third seat row is not engaged. ▶ Fold the corresponding seat backrest back until it engages and/or push the seat row back (⟶ page 215). ▶ Ensure that the seat is engaged (⟶ page 215).

Transmission

Display messages	Possible causes/consequences and ▶ Solutions
Stop vehicle Leave engine running Wait Transmission cooling	* No drive range can be selected from park position P. The transmission is overheating.

Display messages	Possible causes/consequences and ▶ Solutions
	▶ Wait until the transmission has cooled down. ▶ If it is still not possible to select a drive range, contact a qualified specialist workshop.
Only select P when vehicle is stationary	* It is possible to select the park position [P] only if the vehicle is stationary. ▶ Depress the brake pedal to stop. ▶ Shift the transmission to park position [P] with the vehicle at a standstill.
Apply brake to deselect P position	* You have attempted to shift the transmission out of park position [P] and into another transmission position. ▶ Depress the brake pedal. ▶ Engage transmission position [D], [R] or neutral [N].
Apply brake and start vehicle to shift out of P or N	* You have attempted to shift the transmission out of park position [P] or neutral [N] and into another transmission position. ▶ Depress the brake pedal. ▶ Start the vehicle. ▶ Change the transmission position.
Apply brake to engage D or R	* You have attempted to engage transmission position [D] or [R]. ▶ Depress the brake pedal. ▶ Engage transmission position [D] or [R].
Apply brake to engage R	* You have attempted to select transmission position [R]. ▶ Depress the brake pedal. ▶ Select transmission position [R].
Risk of vehicle rolling away Driver's door open Transmission not in P	* The driver's door is not fully closed and transmission position [D], [R] or neutral [N] is engaged. The vehicle may roll away.

Display messages	Possible causes/consequences and ▶ Solutions
	▶ Engage park position P when parking the vehicle.
N permanently active Risk of vehicle rolling	* Neutral N has been engaged while the vehicle is moving or while you are driving. ▶ Depress the brake pedal to stop. ▶ Shift the transmission to park position P when the vehicle is stationary. ▶ To continue driving, select transmission position D or R.
Reversing not poss. Consult workshop	* The transmission is malfunctioning. It is not possible to engage transmission position R. ▶ Consult a qualified specialist workshop.
Transmission Malfunction Stop	* The transmission is malfunctioning. The transmission shifts to neutral N automatically. ▶ Stop the vehicle immediately in accordance with the traffic conditions. ▶ Depress the brake pedal. ▶ Engage park position P. ▶ Consult a qualified specialist workshop.
Consult workshop without changing the transmission position	* The transmission is malfunctioning. It is no longer possible to change the transmission position. ▶ If transmission position D is engaged, consult a qualified specialist workshop and do not change the transmission position. ▶ For all other transmission positions, park the vehicle safely. ▶ Consult a qualified specialist workshop.

Brakes

Display messages	Possible causes/consequences and ▶ Solutions
 Parking brake See Owner's Manual	* The yellow indicator lamp (P) is lit. The electric parking brake is malfunctioning. **To apply:** ▶ Switch the vehicle off and then back on again. ▶ Apply the electric parking brake manually (⟶ page 345). If it is not possible to apply the electric parking brake: ▶ Consult a qualified specialist workshop. ▶ Where necessary, also secure the parked vehicle against rolling away. * The yellow indicator lamp (P) and the red indicator lamp (P) are lit. The electric parking brake is malfunctioning. **To release:** ▶ Switch the vehicle off and then back on again. ▶ Release the electric parking brake manually (⟶ page 345). or ▶ Release the electric parking brake automatically (⟶ page 344). If it is still not possible to release the electric parking brake: ▶ Do not continue driving. Consult a qualified specialist workshop. * The yellow indicator lamp (P) is lit and the red indicator lamp (P) is flashing. The electric parking brake is malfunctioning. The electric parking brake could not be applied or released. ▶ Switch the vehicle off and then back on again. **To apply:**

Display messages	Possible causes/consequences and ▶ Solutions
	▶ Release and then apply the electric parking brake manually (⟶ page 345). **To release:** ▶ Apply and then release the electric parking brake manually. If it is not possible to apply the electric parking brake or the red indicator lamp (P) continues flashing: ▶ Do not continue driving. Consult a qualified specialist workshop. ▶ Where necessary, also secure the parked vehicle against rolling away. * The yellow indicator lamp (P) is lit and the red indicator lamp (P) flashes for approximately ten seconds after the electric parking brake has been applied or released. It then remains lit or goes out. The electric parking brake is malfunctioning. **If the state of charge is too low:** ▶ Charge the 12 V battery (⟶ page 58). **To apply:** ▶ Switch off the vehicle. The electric parking brake will be applied automatically. If you do not want the electric parking brake to be applied (e.g.at a car wash or when the vehicle is being towed), leave the vehicle switched on. This does not apply when having the vehicle towed with the rear axle raised. If the electric parking brake is not applied automatically: ▶ Switch the vehicle off and then back on again. ▶ Release and then apply the electric parking brake manually (⟶ page 345). If it is still not possible to apply the electric parking brake: ▶ Consult a qualified specialist workshop.

Display messages	Possible causes/consequences and ▶ Solutions
	▶ Where necessary, also secure the parked vehicle against rolling away. **To release:** ▶ If the conditions for automatic release are fulfilled and the electric parking brake is not released automatically, release the electric parking brake manually (⟶ page 345). If it is still not possible to release the electric parking brake: ▶ Do not continue driving. Consult a qualified specialist workshop.
 Release parking brake	* The red indicator lamp (P) is flashing. **THE ELECTRIC PARKING BRAKE IS APPLIED WHILE YOU ARE DRIVING:** • A condition for automatic release of the electric parking brake has not been fulfilled (⟶ page 344). • You are performing emergency braking using the electric parking brake (⟶ page 346). ▶ Check the conditions for automatic release of the electric parking brake. ▶ Release the electric parking brake manually.
 Parking brake Switch on vehicle to release	* The red indicator lamp (P) is lit. You have attempted to release the electric parking brake with the vehicle switched off. ▶ Switch on the vehicle.
 Check brake fluid level	* There is insufficient brake fluid in the brake fluid reservoir.

Display messages	Possible causes/consequences and ▶ Solutions
	WARNING Risk of an accident due to low brake fluid level If the brake fluid level is too low, the braking effect and the braking characteristics may be impaired. ▶ Stop the vehicle as soon as possible, paying attention to road and traffic conditions. Do not continue driving. ▶ Consult a qualified specialist workshop. ▶ Do not top up the brake fluid.
	▶ Stop the vehicle immediately in accordance with the traffic conditions. Do not continue driving. ▶ Do not top up the brake fluid. ▶ Consult a qualified specialist workshop.
Check brake pads See Owner's Manual	* The brake linings have reached the wear limit. ▶ Consult a qualified specialist workshop.

Driving and driving safety systems

Display messages	Possible causes/consequences and ▶ Solutions
 currently unavailable See Owner's Manual (ABS and ESP®)	* ABS and ESP® are temporarily unavailable. Other driving systems and driving safety systems (e.g. BAS) may also be temporarily unavailable. The brake system continues to function normally. Braking distance may increase in an emergency braking situation.

Display messages	Possible causes/consequences and ▶ Solutions
	WARNING Risk of skidding if ABS and ESP® are malfunctioning The wheels may lock during braking and ESP® does not perform any vehicle stabilisation. The steerability and braking characteristics are heavily impaired and the braking distance may increase. In addition, other driving safety systems are switched off. ► Drive carefully on a suitable stretch of road, making slight steering movements at a speed above 30 km/h. ► If the display message does not disappear, consult a qualified specialist workshop immediately. Drive carefully. ► Drive with caution on a suitable stretch of road, executing slight steering movements at a speed above 30 km/h. ► If the display message does not disappear, consult a qualified specialist workshop immediately. Extreme caution should be afforded if you continue driving in this situation.
 inoperative See Owner's Manual (ABS and ESP®)	* ABS and ESP® are malfunctioning. Other driving systems and driving safety systems (e.g. BAS) may also be malfunctioning. The brake system continues to function normally. Braking distance may increase in an emergency braking situation.

Display messages	Possible causes/consequences and ▶ Solutions

WARNING
Risk of skidding if ABS and ESP® are malfunctioning

The wheels may block during braking and ESP® does not perform any vehicle stabilization.

The steerability and braking characteristics are heavily impaired and the braking distance may increase. In addition, other driving safety systems are switched off.

- ▶ Drive on carefully.
- ▶ Have ABS and ESP® checked immediately at a qualified specialist workshop.

▶ Continue driving with caution.

▶ Consult a qualified specialist workshop immediately.



currently unavailable See Owner's Manual (ESP®)

* ESP® is temporarily unavailable.

Other driving systems and driving safety systems (e.g. BAS) may also be malfunctioning.

WARNING
Risk of skidding if ESP® is malfunctioning

If ESP® is malfunctioning, ESP® cannot carry out vehicle stabilisation. In addition, other driving safety systems are switched off.

- ▶ Drive carefully on a suitable stretch of road, making slight steering movements at a speed above 30 km/h.
- ▶ If the display message does not disappear, consult a qualified specialist workshop immediately. Drive carefully.

▶ Drive with caution on a suitable stretch of road, executing slight steering movements at a speed above 30 km/h.

Display messages	Possible causes/consequences and ▶ Solutions
	▶ If the display message does not disappear, consult a qualified specialist workshop immediately. Extreme caution should be afforded if you continue driving in this situation.
 inoperative See Owner's Manual (ESP®)	* ESP® is malfunctioning. Other driving systems and driving safety systems (e.g. BAS) may also be malfunctioning. The brake system continues to function normally. Braking distance may increase in an emergency braking situation. **WARNING** Risk of skidding if ESP® is malfunctioning If ESP® is malfunctioning, ESP® cannot carry out vehicle stabilisation. In addition, other driving safety systems are switched off. ▶ Drive on carefully. ▶ Have ESP® checked at a qualified specialist workshop. ▶ Continue driving with caution. ▶ Consult a qualified specialist workshop immediately.
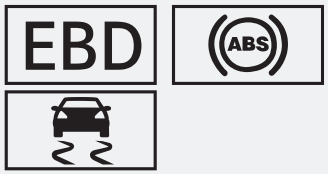 inoperative See Owner's Manual (EBD, ABS and ESP®)	* EBD, ABS and ESP® are malfunctioning. Other driving systems and driving safety systems (e.g. BAS) may also be malfunctioning.

Display messages	Possible causes/consequences and ▶ Solutions
	WARNING Risk of skidding if EBD, ABS and ESP® are malfunctioning The wheels may block during braking and ESP® does not perform any vehicle stabilization. The steerability and braking characteristics are heavily impaired and the braking distance may increase. In addition, other driving safety systems are switched off. ▶ Drive on carefully. ▶ Have the brake system checked immediately at a qualified specialist workshop. ▶ Continue driving with caution. ▶ Consult a qualified specialist workshop immediately.
HOLD Off	* The HOLD function is deactivated due to the vehicle sliding or because a condition for activation is not fulfilled. ▶ Reactivate the HOLD function later or check the activation conditions for the HOLD function (⟶ page 353).
 ATTENTION ASSIST: Take a break!	* ATTENTION ASSIST has detected fatigue or an increasing lack of concentration on the part of the driver (⟶ page 355). ▶ If necessary, take a break.
 ---km/h	* Cruise control cannot be activated because not all activation conditions are fulfilled. ▶ Observe the activation conditions for cruise control (⟶ page 358).
Cruise control inoperative	* Cruise control is malfunctioning. ▶ Consult a qualified specialist workshop.

Display messages	Possible causes/consequences and ▶ Solutions
Cruise control and Limiter inoperative	* Cruise control and the limiter are malfunctioning. ▶ Consult a qualified specialist workshop.
Cruise control off	* Cruise control has been deactivated. If there is an additional warning tone, cruise control has been deactivated automatically (⟶ page 357).
LIM ---km/h	* The limiter can not be engaged temporarily. The system will become available again when the cause of the problem is rectified.
LIM passive	* If you depress the accelerator pedal beyond the point of resistance (kickdown), the limiter will be switched to passive mode (⟶ page 357).
Limiter inoperative	* The limiter is malfunctioning. ▶ Consult a qualified specialist workshop.
Speed Limit Assist currently unavailable See Owner's Manual	* Speed Limit Assist is temporarily unavailable. ▶ Continue driving. The system will become available again when the cause of the problem is rectified.
Speed Limit Assist inoperative	* Speed Limit Assist is malfunctioning. ▶ Continue driving. or ▶ Stop the vehicle in accordance with the traffic conditions and restart the vehicle. ▶ If the display message does not disappear, consult a qualified specialist workshop.
Speed limit (winter tyres) XXX km/h	* You have reached the maximum permissible stored speed for winter tyres. It is not possible to exceed this speed.

Display messages	Possible causes/consequences and ▶ Solutions
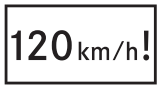 Maximum speed exceeded	* You have exceeded the maximum permissible speed (for certain countries only). ▶ Reduce your speed.
Traffic Sign Assist currently unavailable See Owner's Manual	* Traffic Sign Assist is temporarily unavailable. The system will become available again when the cause of the problem is rectified. ▶ Continue driving in compliance with the traffic regulations.
Traffic Sign Assist inoperative	* Traffic Sign Assist is malfunctioning. ▶ Continue driving in compliance with the traffic regulations. or ▶ Stop the vehicle in accordance with the traffic conditions and restart the vehicle. ▶ If the display message does not disappear, consult a qualified specialist workshop.
 Malfunction Maximum speed 80 km/h	* The adjustable damping is malfunctioning. The vehicle's handling characteristics may be affected. ▶ Do not drive at speeds greater than 80 km/h. ▶ Consult a qualified specialist workshop.

Driver assistance systems

Display messages	Possible causes/consequences and ▶ Solutions
Emergency stop initiated To cancel: operate steering wheel and a pedal	* No driver activity (e.g. steering or accelerating) was detected for an extended period. Active Emergency Stop Assist will initiate an emergency stop (⟶ page 370). ▶ Place your hands on the steering wheel. ▶ Move the steering wheel.

Display messages	Possible causes/consequences and ▶ Solutions
	▶ Accelerate or brake. Information on cancelling an emergency stop (⟶ page 373).
 ---km/h	* Active Distance Assist DISTRONIC cannot be activated because not all activation conditions are fulfilled. ▶ Comply with the activation conditions of Active Distance Assist DISTRONIC (⟶ page 364).
 suspended	* If you depress the accelerator pedal beyond the setting of Active Distance Assist DISTRONIC, the system will switch to passive mode (⟶ page 361).
 Off	* Active Distance Assist DISTRONIC was deactivated. If a warning tone also sounds, Active Distance Assist DISTRONIC has deactivated automatically (⟶ page 364).
Active Distance Assist currently unavailable See Owner's Manual	* Active Distance Assist DISTRONIC is temporarily unavailable. The ambient conditions are outside the system limits (⟶ page 361). The system will become available again as soon as the ambient conditions are within the system limits. ▶ Continue driving with caution. or ▶ If the display message does not disappear, stop the vehicle in accordance with the traffic conditions and restart the vehicle.
Active Distance Assist inoperative	* Active Distance Assist DISTRONIC and Active Emergency Stop Assist are malfunctioning. Other driving systems and driving safety systems may also be malfunctioning. ▶ Continue driving with caution. or

Display messages	Possible causes/consequences and ▶ Solutions
	▶ Stop the vehicle in accordance with the traffic conditions and restart the vehicle. ▶ If the display message does not disappear, consult a qualified specialist workshop.
Active Distance Assist available again	* Active Distance Assist DISTRONIC is operational again. ▶ Switch on Active Distance Assist DISTRONIC (⟶ page 364).
Active Brake Assist Functions currently limited See Owner's Manual	* **FOR VEHICLES WITH THE DRIVING ASSISTANCE PACKAGE, THE FOLLOWING FUNCTIONS MAY BE TEMPORARILY UNAVAILABLE OR ONLY AVAILABLE TO A LIMITED EXTENT:** • Active Brake Assist • Active Evasive Steering Assist The ambient conditions are outside the system limits (⟶ page 374). **Vehicles without Driving Assistance Package:** Active Brake Assist is temporarily unavailable. ▶ Continue driving with caution. The system will become available again as soon as the ambient conditions are within the system limits. or ▶ If the display message does not disappear, stop the vehicle in accordance with the traffic conditions and restart the vehicle.
Active Brake Assist Functions limited See Owner's Manual	* **FOR VEHICLES WITH THE DRIVING ASSISTANCE PACKAGE, THE FOLLOWING FUNCTIONS MAY BE TEMPORARILY UNAVAILABLE OR ONLY AVAILABLE TO A LIMITED EXTENT:** • Active Brake Assist • Active Evasive Steering Assist **Vehicles without Driving Assistance Package:** Active Brake Assist is temporarily unavailable or only available to a limited extent. ▶ Continue driving with caution. or

Display messages	Possible causes/consequences and ▶ Solutions
	▶ Stop the vehicle in accordance with the traffic conditions and restart the vehicle. ▶ If the display message does not disappear, consult a qualified specialist workshop.
Active Steering Assist currently unavailable See Owner's Manual	* Active Steering Assist is temporarily unavailable. The ambient conditions are outside the system limits (⟶ page 370). The system will become available again as soon as the ambient conditions are within the system limits. ▶ Continue driving. ▶ Check the tyre pressure as necessary.
Active Steering Assist inoperative	* Active Steering Assist and Active Emergency Stop Assist are malfunctioning. Active Distance Assist DISTRONIC is still available. ▶ Continue driving. or ▶ Stop the vehicle in accordance with the traffic conditions and restart the vehicle. ▶ If the display message does not disappear, consult a qualified specialist workshop.
Active Steering Assist currently unavailable due to multiple emergency stops	* Active Steering Assist is temporarily unavailable due to multiple emergency stops. ▶ Resume manual steering and stop in accordance with the traffic conditions. ▶ Switch the vehicle off and then back on again. Active Steering Assist is available once more.
Active Emergency Stop Assist currently unavailable See Owner's Manual	* Active Emergency Stop Assist is temporarily unavailable. The ambient conditions are outside the system limits (⟶ page 373). The system will become available again as soon as the ambient conditions are within the system limits. ▶ Continue driving. or ▶ If the display message does not disappear, stop the vehicle in accordance with the traffic conditions and restart the vehicle.

Display messages	Possible causes/consequences and ▶ Solutions
Active Emergency Stop Assist inoperative	* Active Emergency Stop Assist is malfunctioning. ▶ Continue driving. or ▶ Stop the vehicle in accordance with the traffic conditions and restart the vehicle. ▶ If the display message does not disappear, consult a qualified specialist workshop.
Blind Spot Assist and exit warning currently unavailable See Owner's Manual	* Blind Spot Assist is temporarily unavailable. The system limits have been reached (⟶ page 387). The system will become available again when the cause of the problem is rectified. ▶ Continue driving. or ▶ If the display message does not disappear, stop the vehicle in accordance with the traffic conditions and restart the vehicle.
Blind Spot Assist and exit warning inoperative	* Blind Spot Assist or the exit warning is malfunctioning. ▶ Continue driving. or ▶ Stop the vehicle in accordance with the traffic conditions and restart the vehicle. ▶ If the display message does not disappear, consult a qualified specialist workshop.
Blind Spot Assist unavailable when towing a trailer See Owner's Manual	* When you establish electrical connection to the trailer, Blind Spot Assist will be unavailable. ▶ Press the left-hand Touch Control and acknowledge the display message.
Active Lane Keeping Assist currently unavailable See Owner's Manual	* Active Lane Keeping Assist is temporarily unavailable. The ambient conditions are outside the system limits (⟶ page 389). The system will become available again as soon as the ambient conditions are within the system limits.

Display messages	Possible causes/consequences and ▶ Solutions
	▶ Continue driving.
Active Lane Keeping Assist inoperative	* Active Lane Keeping Assist and Active Emergency Stop Assist are malfunctioning. ▶ Continue driving. or ▶ Stop the vehicle in accordance with the traffic conditions and restart the vehicle. ▶ If the display message does not disappear, consult a qualified specialist workshop.
Active Lane Keeping Assist functions restricted See Owner's Manual	* Active Lane Keeping Assist is available but restricted. ▶ Continue driving. or ▶ Stop the vehicle in accordance with the traffic conditions and restart the vehicle. ▶ If the display message does not disappear, consult a qualified specialist workshop.
 temporarily unavailable Sensors dirty	* **FRONT AND CORNER RADAR SENSORS (HEREAFTER REFERRED TO AS "SENSORS") ARE MALFUNCTIONING. POSSIBLE CAUSES:** • The sensors are dirty • Heavy rain or snow • Extensive country drives with no flowing traffic (e.g. in the desert) Driving systems and driving safety systems may be malfunctioning or temporarily unavailable. The brake system, steering and drive system will continue to function normally. ▶ Continue driving with caution. Once the causes of the problem have been rectified, the driving systems and driving safety systems will be available again and the corresponding symbols are switched off. If the display message does not disappear:

Display messages	Possible causes/consequences and ▶ Solutions
	▶ Stop the vehicle in accordance with the traffic conditions. ▶ Clean all sensor covers from the outside (⟶ page 348). ▶ Restart the vehicle.
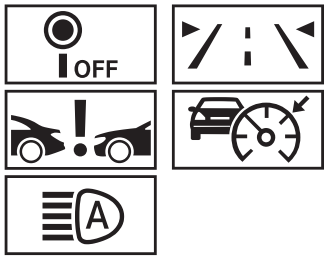 Camera view restricted See Owner's Manual	* **THE VIEW OF THE MULTIFUNCTION CAMERA IS RESTRICTED. POSSIBLE CAUSES:** • Dirt on the windscreen in the field of vision of the multifunction camera • Heavy rain, snow or fog • Mist on the inside or outside of the windscreen: in certain weather conditions, mist can form on the inside or outside of the windscreen during colder times of the year in particular. ⓘ The mist on the windscreen will be removed automatically in a short space of time with the aid of a heater. The restriction is temporary. Driving systems and driving safety systems may be malfunctioning or temporarily unavailable. The brake system, steering and drive system will continue to function normally. ▶ Continue driving with caution. ▶ To remove mist from the outside, wipe once (⟶ page 270). ▶ To remove the mist from the inside, press MAX (⟶ page 282). Once the causes of the problem have been rectified, the driving systems and driving safety systems will be available again and the corresponding symbols are switched off. If the display message still does not disappear after a driving time of about 15 minutes: ▶ Stop the vehicle in accordance with the traffic conditions. ▶ Clean the windscreen, especially around the position of the multifunction camera (⟶ page 348). ▶ Restart the vehicle.

Display messages	Possible causes/consequences and ▶ Solutions
PRE-SAFE inoperative See Owner's Manual	* The PRE-SAFE® functions are malfunctioning. ▶ Consult a qualified specialist workshop.

Parking assistance systems

Display messages	Possible causes/consequences and ▶ Solutions
PARKTRONIC inoperative See Owner's Manual	* Parking Assist PARKTRONIC is malfunctioning. The system will become available again when the cause of the problem is rectified. ▶ Continue driving while paying attention to the vehicle's surroundings. or ▶ Stop the vehicle in accordance with the traffic conditions and restart the vehicle. ▶ If the display message does not disappear, consult a qualified specialist workshop.
Active Parking Assist and PARKTRONIC inoperative See Owner's Manual	* Active Parking Assist and Parking Assist PARKTRONIC are malfunctioning. The system will become available again when the cause of the problem is rectified. ▶ Continue driving while paying attention to the vehicle's surroundings. or ▶ Stop the vehicle in accordance with the traffic conditions and restart the vehicle. ▶ If the display message does not disappear, consult a qualified specialist workshop.

Mercedes-Benz emergency call system

Display messages	Possible causes/consequences and ▶ Solutions
 Inoperative	* The Mercedes-Benz emergency call system is malfunctioning. The Mercedes-Benz Support system is also malfunctioning. ▶ Consult a qualified specialist workshop.

Tyre pressure monitor

Display messages	Possible causes/consequences and ▶ Solutions
Tyre press. monitor currently unavailable	* There is interference from a powerful radio signal source. As a result, no signals from the tyre pressure sensors are being received. The tyre pressure monitoring system is temporarily unavailable. The tyre pressure monitoring system will restart automatically as soon as the cause has been rectified. ▶ Continue driving.
Tyre press. monitor inoperative	* The tyre pressure monitoring system is malfunctioning. **WARNING** There is a risk of an accident if the tyre pressure monitoring system is malfunctioning The tyre pressure monitoring system cannot issue a warning if there is pressure loss in one or more of the tyres. Tyres with insufficient tyre pressure may impair the driving characteristics as well as steering and braking. ▶ Have the tyre pressure monitoring system checked at a qualified specialist workshop. ▶ Consult a qualified specialist workshop.
Tyre pressure monitor inoperative No tyre pressure sensors	* The wheels fitted do not have suitable tyre pressure sensors. The tyre pressure monitoring system is deactivated.

Display messages	Possible causes/consequences and ▶ Solutions
	▶ Fit wheels with suitable tyre pressure sensors.
 Wheel sensor(s) missing	* There is no signal from the tyre pressure sensor in at least one wheel. No pressure value is displayed for the affected tyre. ▶ Have the faulty tyre pressure sensor replaced at a qualified specialist workshop.
 Check tyre(s)	* The tyre pressure in one or more tyres has dropped significantly. The wheel position is displayed. A warning tone will also sound. **⚠ WARNING** Risk of an accident due to insufficient tyre pressure • The tyres can burst. • The tyres can wear excessively and/or unevenly. • The driving characteristics as well as the steering and braking may be greatly impaired. You could then lose control of the vehicle. ► Observe the recommended tyre pressures. ► Adjust the tyre pressure if necessary. ▶ Stop the vehicle in accordance with the traffic conditions. ▶ Check the tyre pressure (⟶ page 654) and the tyres.
 Rectify tyre pressure	* The tyre pressure is too low in at least one of the tyres, or the difference in tyre pressure between the individual wheels is too great. ▶ Check the tyre pressure and add air, if necessary. ▶ When the tyre pressure is correct, restart the tyre pressure monitoring system (⟶ page 656).

Display messages	Possible causes/consequences and ▶ Solutions
 Warning tyre malfunction	* The tyre pressure in one or more tyres has dropped suddenly. The wheel position is displayed.
 Tyre(s) overheated	* At least one tyre is overheating. The affected tyres are displayed in red. At temperatures close to the limit value, the tyres are displayed in yellow.

WARNING
Risk of an accident from driving with a flat tyre

- The tyres can overheat and be damaged.
- The driving characteristics as well as the steering and braking characteristics may be greatly impaired.

You could then lose control of the vehicle.

▶ Do not drive with a flat tyre.

▶ Do not exceed the maximum permissible driving distance in emergency mode and the maximum permissible speed with a flat MOExtended tyre.

▶ Observe the notes on flat tyres.

Notes on flat tyres (⟶ page 59).

▶ Stop the vehicle in accordance with the traffic conditions.

▶ Check the tyres.

WARNING
Risk of an accident from driving with overheated tyres

Overheated tyres can burst.

▶ Reduce speed so that the tyres cool down.

▶ Reduce your speed so that the tyres cool down.

Display messages	Possible causes/consequences and ▶ Solutions
 Reduce speed	* At least one tyre is overheating. The affected tyres are displayed in red. At temperatures close to the limit value, the tyres are displayed in yellow. **WARNING** Risk of an accident from driving with overheated tyres Overheated tyres can burst. ► Reduce speed so that the tyres cool down. ► Reduce your speed so that the tyres cool down.

Warning and indicator lamps

Overview of indicator lamps and warning lamps

Some systems will perform a self-test when the vehicle is switched on. Some indicator lamps and warning lamps may briefly light up or begin flashing. This behaviour is non-critical. These indicator lamps and warning lamps only indicate a fault if they light up or begin flashing after the vehicle has been started or during a journey.

The indicator lamps and warning lamps are located in the highlighted display sections.

STANDARD DRIVER DISPLAY



WIDESCREEN COCKPIT DRIVER DISPLAY



Depending on the display settings, the positions of the indicator lamps on the driver display may differ from the example shown.

INDICATOR LAMPS AND WARNING LAMPS

OCCUPANT SAFETY

- Restraint system (⟶ page 807)
- Seat belt (⟶ page 807)
- Passive occupant presence reminder (white) (⟶ page 807)
- Passive occupant presence reminder (yellow) (⟶ page 807)

DRIVE SYSTEM

- Reduced power (⟶ page 808)
- System error (⟶ page 808)

 Electrical fault (⟶ page 808)

VEHICLE

 Trailer hitch (⟶ page 809)

 Power steering (yellow) (⟶ page 809)

 Power steering (red) (⟶ page 809)

BRAKING

 Electric parking brake (yellow) (⟶ page 810)

 Electric parking brake (red) (⟶ page 810)

 Brakes (yellow) (⟶ page 810)

 Brakes (red) (⟶ page 810)

DRIVING SYSTEMS AND DRIVING SAFETY SYSTEMS

 ABS (⟶ page 812)

 ESP® (⟶ page 812)

 ESP® OFF (⟶ page 812)

 ATTENTION ASSIST (⟶ page 812)

 Traffic Sign Assist (⟶ page 812)

 Speed Limit Assist (⟶ page 812)

 Distance warning (⟶ page 812)

 Active Brake Assist (⟶ page 812)

 Active Brake Assist (⟶ page 812)

MERCEDES-BENZ EMERGENCY CALL SYSTEM

 Mercedes-Benz emergency call system (⟶ page 816)

TYRE PRESSURE MONITORING SYSTEM

 Tyre pressure monitoring system (⟶ page 816)

EXTERIOR LIGHTING

 Standing lights (⟶ page 263)

 Low beam (⟶ page 263)

 High beam (⟶ page 264)

 Turn signal light (⟶ page 264)

 Front fog lamps (⟶ page 263)

 Rear fog light (⟶ page 263)

SYMBOLS ON THE CENTRAL DISPLAY

 Drive Away Assist (⟶ page 409)

 Cross Traffic Alert (⟶ page 410)

 Close-range braking (⟶ page 410)

Occupant safety

Warning/indicator lamp	Possible causes/consequences and ▶ Solutions
 Restraint system warning lamp	* The restraint system red warning lamp is lit while the vehicle is on. The restraint system is malfunctioning (⟶ page 122). **⚠ DANGER** Risk of fatal injuries due to restraint system malfunctions Components in the restraint system may be activated unintentionally or not deploy as planned in an accident. In the event of an accident, the high-voltage on-board electrical system may not be deactivated as intended. You may suffer an electric shock if you touch the damaged components of the high-voltage on-board electrical system. ► Have the restraint system checked and repaired immediately at a qualified specialist workshop. ► After an accident, switch off the vehicle immediately. ► Continue driving with caution. ► Observe the messages on the driver display. ► Consult a qualified specialist workshop immediately.
 Seat belt warning lamp flashes	* The red seat belt warning lamp flashes and an intermittent warning tone sounds. The driver or front passenger has not fastened his/her seat belt while the vehicle is in motion. ► Fasten your seat belt (⟶ page 121). There are objects on the front passenger seat. ► Remove the objects from the front passenger seat.

Warning/indicator lamp	Possible causes/consequences and ▶ Solutions
 Seat belt warning lamp lights up	* The red seat belt warning lamp lights up once the vehicle has started. In addition, an intermittent warning tone may sound. The red seat belt warning lamp reminds the driver and front passenger to fasten their seat belts. ▶ Fasten your seat belt (⟶ page 121). If you have placed objects on the front passenger seat, the red seat belt warning lamp may remain lit.
 Passive occupant presence reminder warning lamp (white)	* The white occupant presence reminder warning lamp is lit. Passive occupant presence reminder is deactivated. ▶ Switch on passive occupant presence reminder (⟶ page 168).
 Passive occupant presence reminder warning lamp (yellow)	* The yellow occupant presence reminder warning lamp is lit. The passive occupant presence reminder is faulty. ▶ Observe the messages on the driver display.

Drive system

Warning/indicator lamp	Possible causes/consequences and ▶ Solutions
 Reduced-power warning lamp	* The yellow reduced-power warning lamp is lit. Drive system power output is reduced. ▶ Observe the messages on the driver display.
 System error warning lamp	* The red system error warning lamp is lit while the vehicle is in vehicle traction standby READY. There is a malfunction in the drive system. ▶ Observe the messages on the driver display.

Warning/indicator lamp	Possible causes/consequences and ▶ Solutions
 Electrical fault warning lamp	* The red electrical fault warning lamp is lit. There is a fault with the electrics. ▶ Observe the messages on the driver display.

Vehicle

Warning/indicator lamp	Possible causes/consequences and ▶ Solutions
 Trailer hitch warning lamp	* The red trailer hitch warning lamp is lit. The trailer hitch is not operational. **WARNING** Risk of an accident if the ball neck is not locked The trailer may become detached. ▶ Stop the vehicle immediately in accordance with the traffic conditions. Do not continue driving. ▶ Uncouple the trailer and secure it against rolling away. ▶ Initiate a new swivelling procedure and do not re-couple the trailer until the display message disappears. ▶ Observe the messages on the driver display.
 Power steering warning lamp (yellow)	* The yellow power steering warning lamp is lit while the vehicle is running. The power assistance or the steering itself is malfunctioning. ▶ Observe the messages on the driver display.

Warning/indicator lamp	Possible causes/consequences and ▶ Solutions
 Power steering warning lamp (red)	* The red power steering warning lamp is lit while the vehicle is running. The power assistance or the steering itself is malfunctioning. **WARNING** Risk of accident if steering capability is impaired If the steering does not function as intended, the vehicle's operating safety is jeopardised. ▶ Pull over and stop the vehicle safely as soon as possible, paying attention to road and traffic conditions. Do not continue driving under any circumstances. ▶ Consult a qualified specialist workshop. ▶ Observe the messages on the driver display.

Brakes

Warning/indicator lamp	Possible causes/consequences and ▶ Solutions
 Electric parking brake indicator lamp (red)  Electric parking brake indicator lamp (yellow)	* The red electric parking brake indicator lamp is flashing or is lit. The yellow electric parking brake indicator lamp is also lit up in the event of a fault. ▶ Observe the messages on the driver display.

Warning/indicator lamp	Possible causes/consequences and ▶ Solutions
 Brakes warning lamp (yellow)	* The yellow brake warning lamp is lit while the vehicle is running. **⚠ WARNING** Risk of an accident due to a brake system malfunction If the brake system is malfunctioning, braking characteristics may be impaired. ▶ Drive on carefully. ▶ Have the brake system checked immediately at a qualified specialist workshop. ▶ Adjust your speed and drive on carefully, at a suitable distance from the vehicle in front. ▶ If the driver display shows a display message, observe it. ▶ Consult a qualified specialist workshop.
 Brakes warning lamp (red)	* The red brakes warning lamp is lit while the vehicle is running. **POSSIBLE CAUSES:** • The brake force boosting is malfunctioning and the braking characteristics may be affected. • There is insufficient brake fluid in the brake fluid reservoir. ▶ Observe the messages on the driver display.

Warning/indicator lamp	Possible causes/consequences and ▶ Solutions
	WARNING Risk of accident and injury if brake force boosting is malfunctioning If brake force boosting is malfunctioning, increased brake pedal force may be necessary for braking. The braking characteristics may be impaired. The braking distance can increase in emergency braking situations. ► Stop in a safe location immediately. Do not continue driving! ► Consult a qualified specialist workshop.
	WARNING Risk of an accident due to low brake fluid level If the brake fluid level is too low, the braking effect and the braking characteristics may be impaired. ► Stop the vehicle as soon as possible, paying attention to road and traffic conditions. Do not continue driving. ► Consult a qualified specialist workshop. ► Do not top up the brake fluid.

Driving and driving safety systems

Warning/indicator lamp	Possible causes/consequences and ▶ Solutions
 ABS warning lamp	* The yellow ABS warning lamp is lit while the vehicle is running. ABS is malfunctioning. If an additional warning tone sounds, EBD is malfunctioning.

Warning/indicator lamp	Possible causes/consequences and ▶ Solutions
	Other driving systems and driving safety systems may also be malfunctioning. ▶ Observe the messages on the driver display. **WARNING** There is a risk of skidding if EBD or ABS is malfunctioning The wheels may lock during braking. The steerability and braking characteristics are heavily impaired and the braking distance may increase. In addition, other driving safety systems are switched off. ▶ Drive on carefully. ▶ Have the brake system checked immediately at a qualified specialist workshop. ▶ Continue driving with caution. ▶ Consult a qualified specialist workshop.
 ESP® warning lamp flashes	* The yellow ESP® warning lamp flashes while the vehicle is in motion. One or more wheels have reached their grip limit (⟶ page 351). ▶ Adapt your driving style to suit the road and weather conditions.
 ESP® warning lamp lights up	* The yellow ESP® warning lamp is lit while the vehicle is running. ESP® is malfunctioning. Other driving systems and driving safety systems (e.g. BAS) may also be malfunctioning. ▶ Note the messages on the driver display.

Warning/indicator lamp	Possible causes/consequences and ▶ Solutions
	WARNING Risk of skidding if ESP® is malfunctioning If ESP® is malfunctioning, ESP® cannot carry out vehicle stabilisation. In addition, other driving safety systems are switched off. ▶ Drive on carefully. ▶ Have ESP® checked at a qualified specialist workshop. ▶ Drive on carefully. ▶ Consult a qualified specialist workshop immediately.
 ESP® OFF warning lamp	* The yellow ESP® OFF warning lamp is lit while the vehicle is running. ESP® is deactivated. Other driving systems and driving safety systems may also be inoperative. **WARNING** Risk of skidding when driving with ESP® deactivated ESP® does not act to stabilise the vehicle. The availability of further driving safety systems is also limited. ▶ Drive on carefully. ▶ Deactivate ESP® only for as long as the situation requires. If ESP® cannot be activated, ESP® is malfunctioning. ▶ Have ESP® checked immediately at a qualified specialist workshop.

Warning/indicator lamp	Possible causes/consequences and ▶ Solutions
	▶ Observe the notes on deactivating ESP® (⟶ page 351).
 ATTENTION ASSIST warning lamp	* The yellow ATTENTION ASSIST warning lamp is lit. ATTENTION ASSIST is malfunctioning. ▶ Consult a qualified specialist workshop.
 Traffic Sign Assist warning lamp	* The Traffic Sign Assist warning lamp is lit. Traffic Sign Assist is malfunctioning. ▶ Observe the messages on the driver display.
 Speed Limit Assist warning lamp	* The Speed Limit Assist warning lamp is lit. Speed Limit Assist is malfunctioning. ▶ Observe the messages on the driver display.
 Warning lamp for distance warning	* The red distance warning lamp lights up while the vehicle is in motion. The distance to the vehicle in front is inadequate for the speed selected. If an additional warning tone sounds, the speed at which you are approaching an obstacle is too high. ▶ Be prepared to brake immediately. ▶ Increase the distance. Function of Active Brake Assist (⟶ page 374).
 Active Brake Assist warning lamp	* The Active Brake Assist warning lamp is lit. The system is unavailable due to dirty sensors or a malfunction, or the range of functions is restricted. ▶ Observe the messages on the driver display.
 Active Brake Assist warning lamp	* The Active Brake Assist warning lamp is lit. The system is switched off or the range of functions has been automatically restricted. This may be due to activation of another driving system.

Warning/indicator lamp	Possible causes/consequences and ▶ Solutions
	▶ Observe the notes on Active Brake Assist (⟶ page 374).

Mercedes-Benz emergency call system

Warning/indicator lamp	Possible causes/consequences and ▶ Solutions
 Mercedes-Benz emergency call system warning lamp	* The Mercedes-Benz emergency call system is malfunctioning. The Mercedes-Benz Support system is also malfunctioning. ▶ Consult a qualified specialist workshop.

Tyre pressure monitor

Warning/indicator lamp	Possible causes/consequences and ▶ Solutions
 Tyre pressure monitoring system warning lamp flashes	* The yellow tyre pressure monitor warning lamp (pressure loss/malfunction) flashes for approximately one minute and then remains lit. The tyre pressure monitoring system is malfunctioning. **WARNING** There is a risk of an accident if the tyre pressure monitoring system is malfunctioning The tyre pressure monitoring system cannot issue a warning if there is pressure loss in one or more of the tyres. Tyres with insufficient tyre pressure may impair the driving characteristics as well as steering and braking. ▶ Have the tyre pressure monitoring system checked at a qualified specialist workshop. ▶ Consult a qualified specialist workshop.

Warning/indicator lamp	Possible causes/consequences and ▶ Solutions
 Tyre pressure monitoring system warning lamp lights up	* The yellow tyre pressure monitoring system warning lamp (pressure loss/malfunction) is lit. The tyre pressure monitoring system has detected tyre pressure loss in at least one of the tyres. **WARNING** Risk of an accident due to insufficient tyre pressure • The tyres can burst. • The tyres can wear excessively and/or unevenly. • The driving characteristics as well as the steering and braking may be greatly impaired. You could then lose control of the vehicle. ▶ Observe the recommended tyre pressures. ▶ Adjust the tyre pressure if necessary. ▶ Stop the vehicle in accordance with the traffic conditions. ▶ Check the tyre pressure and the tyres.

Back to Contents

Index

Searching for something specific? Click on the relevant initial letter here and look it up.
Incidentally, you can also use your PDF reader's search function at any time.

0-9
A
B
C
D
E
F
G
H
I
J
K
L
M
N
O
P
Q
R
S
T
U
V
W

0-9

4MATIC >

A

A/C function
- Activating/deactivating (operating unit)
- switching on/off (MBUX)

ABS

Access data
- Setting (Bluetooth®)

Accident, emergency call

Acoustic presence indicator

Acoustic vehicle alerting system

Activating/deactivating
- the limiter

Activating/deactivating the acoustic locking verification signal

Active bonnet

Active bonnet (pedestrian protection)
- Resetting

Active Brake Assist
- Function
- Setting

Active Distance Assist DISTRONIC
- Activating/deactivating
- Activating/deactivating the variable limiter
- Active Emergency Stop Assist
- Active Speed Limit Assist

Calling up a speed
Function
Increasing/decreasing the speed
Route-based speed adaptation
Storing a speed
Active Emergency Stop Assist
Active Lane Keeping Assist
Activating/deactivating
Function
Setting the sensitivity
Trailer operation
Active Parking Assist
Automatic braking function
Exiting a parking space
Function
Manoeuvering brake function
Parking
Pausing
Active Service System PLUS
Active Speed Limit Assist
Active Steering Assist
Activating/deactivating
Active Emergency Stop Assist
Function
Adaptive brake lights
Adaptive cruise control

Adaptive Damping System

- Suspension

Adaptive Highbeam Assist

- Activating/deactivating
- Function

Additional door lock

Adjusting bass, mid-range and treble settings

- Advanced sound system

Adjusting mid-range, treble and bass settings

- Advanced sound system

Adjusting the balance/fader

- Advanced sound system
- Burmester® surround sound system

Adjusting the bass, mid-range and treble

- Burmester® surround sound system

Adjusting the mid-range, treble and bass

- Burmester® surround sound system

Adjusting the sound focus

- Burmester® surround sound system

Adjusting treble, mid-range and bass settings

- Advanced sound system
- Burmester® surround sound system

Advanced sound system

- Adjusting the balance/fader
- Adjusting treble, mid-range and bass settings
- Calling up the sound menu

Information
Switching loudness normalisation on/off
After-sales service
Air conditioning menu
Air distribution
Selecting climate modes
Switching on the steering wheel heater
Air distribution
Overview
Setting
Setting the climate menu
Air inlet
Air pressure
Air vents
Setting
Air-conditioning menu
Climate control
Air/water duct
Airbag
Inflating
Overview
PASSENGER AIR BAG indicator lamps
Warning lamp
Airflow
Setting
Alarm system
All-wheel drive

Alternative route

Ambient lighting

Android Auto

- Connecting a mobile phone (wired)
- Connecting a mobile phone (wireless)
- Ending
- Information
- Sound settings
- Transferred vehicle data

Android smartphone

Animals

Anti-lock braking system

Anti-theft alarm system

Anti-theft protection

- Additional door lock
- Immobiliser

Apple CarPlay®, Smartphone

- Connecting an iPhone® (cable)
- Connecting an iPhone® (wireless)
- Ending
- Notes
- Overview
- Sound settings
- Transferred vehicle data

Apps

- Mercedes-Benz Connect
- Mercedes-Benz Support Calls

Selecting (MBUX multimedia system)

Ashtray

Assembly licence plate, front

Assistance system

Assistant display

Menu (driver display)

ASSYST PLUS

Battery disconnection periods

Displaying the service due date

Maintenance work

Service interval display

Service requirements

Special service requirements

ATA

Deactivating the alarm

Function

Interior protection

Interior protection function

Tow-away protection

Tow-away protection function

ATTENTION ASSIST

Function

Setting

Attention assistant

Augmented reality

MBUX route guidance

Authorisations
Setting
Authorised workshop
Automatic car wash
Automatic climate control
Automatic co-driver airbag shutoff
Function
Automatic distance control
Automatic driving lights
Automatic emergency call
Automatic front passenger airbag shut-off
Information (child restraint system on the front passenger seat)
PASSENGER AIR BAG indicator lamps
Automatic measures after an accident
Automatic mirror folding function
Automatic seat adjustment
Automatic transmission
Autonomous braking
AVAS
Axle load
Trailer operation

B

Baby
- Pregnancy (seat belt)

Bag hook

Ball neck
- Folding out/in
- Trailer coupling

BAS (Brake Assist System)

Basic information

Battery
- Declaration of conformity
- High-voltage battery

Battery (12 V battery)
- Charging
- Notes
- Notes (starting assistance and charging)
- Replacing
- Starting assistance

Battery (high-voltage on-board electrical system)

Battery (key)

Belt
- Fastening
- Notes on wearing correctly
- Releasing

Bicycle rack
- Load capacity
- Trailer operation

Blind Spot Assist
- Activating/deactivating
- Function

Bluetooth®
- Connecting a mobile phone
- Information
- Setting up an Internet connection
- Switching on/off

Bonnet
- Active bonnet
- Opening/closing
- Resetting (active bonnet)

Brake Assist
- Active Brake Assist
- Brake Assist System (BAS)

Brake Assist System (BAS)

Brake disks

Brake fluid

Brake force distribution

Brake lamps
- Adaptive brake lights

Brake pads

Brakes
- ABS (Anti-lock Braking System)

Active Brake Assist
Adaptive brake lights
Brake Assist System (BAS)
Driving tips
EBD (Electronic Brakeforce Distribution)
Electric parking brake
Handbrake
HOLD function
Limited braking effect (salt-treated roads)
New/replaced brake pads/brake discs
Parking brake
Post-collision brake
Recuperation
Running-in notes

Braking assistance

Active Brake Assist
Brake Assist System (BAS)

Breakdown

Flat tyre
Overview of aids
Tow-starting
Towing methods
Transporting the vehicle
Wheel change

Burmester® surround sound system

Adjusting the balance/fader

Adjusting the sound focus
Adjusting treble, mid-range and bass settings
Automatic loudness normalisation
Calling up the sound menu
Information
Selecting the sound profile

C

Call list
- Deleting
- Making a call
- Overview
- Selecting options

Calling Support at Mercedes-Benz

Calling up a web page

Calling up the sound menu
- Advanced sound system
- Burmester® surround sound system

Calls, Telephone operation
- Accepting
- Activating functions during a call
- Calls with several participants
- Declining
- Ending a call
- Incoming call during an existing call
- Making
- Mercedes-Benz Support
- Telephone
- Using the international dialling code
- Via the overhead control panel

Camera

- 360° camera
- Activating using GPS (reversing camera)
- Button
- Care
- Cleaning
- Function
- Information
- Manage activation points
- Opening the camera cover (reversing camera)
- Reversing camera
- Select view

Car key

Car wash

- Automatic car wash
- Car wash mode
- High-pressure cleaner
- Washing by hand

Car wash mode

- Activating/deactivating

Car-to-X-Communication

- Display on map
- Overview
- Sending hazard warnings

Care

- Air/water duct
- Automatic car wash

Camera
Car parts
Car wash mode
Decorative foil
Display
Exterior lighting
Genuine wood/trim elements
Head-up display
Headliner
High-pressure cleaner
Paint
Plastic trim
Seat belt
Steering wheel
Trailer hitch
Vehicle interior
Vehicle socket for the high-voltage battery
Washing by hand
Wheels/rims
Caring for rims
Central display
Operating
Central locking system
Button
Key
Centre console
Lower MBUX control panel

Charge level display

Charge level/charge display

Charging

- 12 V battery
- Charge level display
- Charging cable control panel
- Charging station, mode 3
- Configuring a weekly profile
- Ending the charging process (alternating current, mode 2/3)
- Ending the charging process (direct current, mode 4)
- Flexible charging system Pro
- In time for departure
- Indicator lamps on vehicle socket
- Mains socket, mode 2
- Maximum charging current (mains socket)
- Notes on charging the high-voltage battery
- Notes on the high-voltage battery
- Rapid charging station, mode 4
- Recuperation
- Starting the charging process (alternating current, mode 2/3)
- Starting the charging process (direct current, mode 4)
- Stowing the charging cable
- USB port
- Wallbox, mode 3

Charging cable

- Control panel
- Flexible charging system Pro

Stowing

Charging near destination

Route

Charging process

Paying

Charging settings

Charging system

Checking the coolant level

Child safety lock

Rear door

Side window (rear)

Child seat

Adjusting the vehicle seat

Approval categories

Basic instructions

Brief overview of most important points

Fitting ISOFIX/i-Size

Front passenger seat

Overview of warning stickers

Rearward-facing

Recommendations for child restraint systems

Risks/dangers

Seats suitable for belt-secured child restraint systems

Seats suitable for i-Size child restraint systems

Seats suitable for ISOFIX child restraint systems

Securing to the front passenger seat with the seat belt

Securing to the rear seat with the seatbelt
Top Tether
Without automatic co-driver airbag shutoff

Children

Avoiding dangers in the vehicle
Basic instructions

Chock

Cigarette lighter

Front centre console

Classic menu display content

Selecting

Clean varnish

Cleaning

Air/water duct
Automatic car wash
Camera
Car parts
Car wash mode

Decorative foil
Genuine wood/trim elements
High-pressure cleaner
Paint
Sensors
Vehicle interior
Vehicle socket for the high-voltage battery
Washing by hand

Cleaning the carpet

Cleaning the seat cover

Climate control, Air conditioning system, Blower, Cooling

- Activating/deactivating
- Activating/deactivating the A/C function (control panel)
- Air distribution settings
- Air vents (front)
- Air vents (rear)
- Automatic control
- Closing/opening the windows (air-recirculation button)
- Demisting the windscreen
- Demisting windows
- Immediate pre-entry climate control
- Notes
- Overview of systems
- Pre-entry climate control for departure time
- Pre-entry climate control using the key
- Refrigerant
- Resetting the climate control settings
- Setting the air distribution
- Setting the airflow
- Setting the vehicle interior temperature
- Switching air-recirculation mode on/off
- Switching the A/C function on/off (MBUX)
- Switching the rear window heater on/off
- Synchronisation function
- Ventilation with convenience opening

Climate control settings
- Resetting

Clothes hook

Co-driver airbag shutoff, PASSENGER AIR BAG OFF

COC papers, Certificate of conformity

Cockpit
- Dashboard

Coffee cup symbol

Collision detection (parked vehicle)
- Adjusting
- Information

Combination switch
- Lights
- Windscreen wipers

Comfort
- Information

Communication module
- Disconnecting automatically from the Internet
- Setting up an Internet connection

Commuter route

Compass

Components subject to radio regulations
- Declaration of conformity

Connection status
- Displaying

Overview

Contacts, Address book, Phone book

Calling up

Deleting

Importing

Importing (overview)

Information

Making a call

Name format

Note about suggestions

Options

Selecting options for suggestions

Storing

Control element (MBUX multimedia system)

Setting acoustic feedback

Control elements:

Convenience closing

Convenience feature

Closing/opening the windows (air-recirculation button)

Convenience opening

Coolant

Notes

Copyright

Correct use

Cover

Crawler mode
- Function/notes
- Requirements:
- Setting a speed
- Storing a speed

Cross traffic (warning)

Cross Traffic Alert, Cross traffic warning

Crosswind Assist

Cruise control
- activating/deactivating
- Calling up a speed
- Function

Cup holder
- Rear

D

Damage
Limited protection
Dashboard
Cockpit
Dashcam
Configuring settings
Selecting a USB device
Starting/stopping individual recordings
Starting/stopping loop recording
Data processing in the vehicle
Data protection
Granting authorisations
Data protection rights
Data storage
Data protection rights
Electronic control units
Online services
Deactivating the alarm
Dealership
Declaration of conformity
Battery
Components subject to radio regulations
Electromagnetic compatibility
Jack

TIREFIT kit

Decorative foil

Deployed components

Limited protection

Deployment situations

Destination

Editing a suggestion

Editing intermediate destinations

Editing the previous destinations

Saving as a favourite

Destination entry

Accepting a destination suggestion

Entering an intermediate destination

Entering geo-coordinates

Selecting a contact

Selecting a received destination

Selecting from favourites

Selecting from the map

Selecting previous destinations

Destination entry (multimedia system)

Notes

Selecting a POI

Detecting inattentiveness

Diagnostics connection

Digital Extras

Digital Owner's Manual

Direct commands

Voice commands for MBUX voice assistant

DIRECT SELECT lever

Engages neutral

Engaging drive position

Engaging park position automatically

Engaging reverse gear

Function

Selecting park position

Disconnect device (high-voltage on-board electrical system)

Notes

Display

Care

Display (driver's display)

Overview of displays

Display (MBUX multimedia system)

Settings

Display message

Calling up on driver display

Display messages

- - - km/h

LIM - - - km/h

- - - km/h

2nd seat row, left Not locked

2nd seat row, right Not locked

3rd seat row, left Not locked

3rd seat row, right Not locked

- 12 V battery See Owner's Manual
- Acoustic presence indicator inoperative
- ATTENTION ASSIST: Take a break!
- Automatic driving lights inoperative
- Battery capacity too low Stop Charge immediately
- Battery overheated Stop. Everybody exit vehicle! Outdoors if possible
- Camera view restricted See Owner's Manual
- Cannot fold 2nd seat row See Owner's Manual
- Change key batteries
- Charger cable connected
- Check brake fluid level
- Check tyre(s)
- Cooling system malfunction Stop immediately Switch off the vehicle
- Currently unavailable Charge high-voltage battery
- Currently unavailable High-voltage battery charging incomplete.
- currently unavailable See Owner's Manual (ABS and ESP®)
- currently unavailable See Owner's Manual (ESP®)
- Do not leave persons or animals in the vehicle
- Front left malfunction Consult workshop
- Front left parking lights
- Front left turn signal
- Front right malfunction Consult workshop
- Front right parking lights
- Front right turn signal
- inoperative See Owner's Manual (ABS and ESP®)
- inoperative See Owner's Manual (ESP®)
- EBD inoperative See Owner's Manual (EBD, ABS and ESP®)

SOS Inoperative
Key being taught in Please wait
Key not detected (red display message)
Key not detected (white display message)
Left brake lamp
Left cornering light
Left daytime running lights
Left low beam
Left main beam
Left mirror turn signal
Left window airbag malfunction Consult workshop
Malfunction Maximum speed 80 km/h
Malfunction See Owner's Manual
Malfunction Visit workshop
Malfunction Visit workshop
Malfunction
Malfunction
120 km/h Maximum speed exceeded
Number plate lamp
Off
HOLD Off
Parking brake See Owner's Manual
Parking brake Switch on vehicle to release
LIM passive
Performance severely limited
Pre-entry climate control via key available again after starting vehicle
Pre-entry climate control via key currently unavailable. High-voltage battery low

Rear fog light
Rear left turn signal
Rear right turn signal
Rectify tyre pressure
Reduce speed
Release parking brake
Replace key
Reserve level Charge high-voltage battery
Restraint system malfunction Consult workshop
Reversing light
Right brake lamp
Right cornering light
Right daytime running lights
Right low beam
Right main beam
Right mirror turn signal
Right window airbag malfunction Consult workshop
Second row of seats, left Malfunction Consult workshop
Second row of seats, right Malfunction Consult workshop
Steering malfunction Increased physical effort See Owner's Manual
Steering malfunction Stop immediately See Owner's Manual
Stop Switch off the vehicle
suspended
Switch off lights
Switch on headlamps
temporarily unavailable Sensors dirty
Third brake lamp

- Third row of seats, left Malfunction Consult workshop
- Third row of seats, right Malfunction Consult workshop
- Top up coolant See Owner's Manual
- Top up washer fluid
- Towing not permitted See Owner's Manual
- Trailer brake lamp
- Trailer coupling Check lock (red display message)
- Trailer coupling Check lock (white display message)
- Trailer left turn signal
- Trailer right turn signal
- Trailer tail light
- Tyre(s) overheated
- Warning tyre malfunction
- Wheel sensor(s) missing
- AC charging inoperative Consult workshop
- Active bonnet malfunction See Owner's Manual
- Active Brake Assist Functions currently limited See Owner's Manual
- Active Brake Assist Functions limited See Owner's Manual
- Active Distance Assist available again
- Active Distance Assist currently unavailable See Owner's Manual
- Active Distance Assist inoperative
- Active Emergency Stop Assist currently unavailable See Owner's Manual
- Active Emergency Stop Assist inoperative
- Active Lane Keeping Assist currently unavailable See Owner's Manual
- Active Lane Keeping Assist functions restricted See Owner's Manual
- Active Lane Keeping Assist inoperative
- Active Parking Assist and PARKTRONIC inoperative See Owner's Manual

Active Steering Assist currently unavailable due to multiple emergency stops
Active Steering Assist currently unavailable See Owner's Manual
Active Steering Assist inoperative
Adaptive Highbeam Assist currently unavailable See Owner's Manual
Adaptive Highbeam Assist inoperative
Anti-theft alarm system Malfunction
Apply brake and start vehicle to shift out of P or N
Apply brake to deselect P position
Apply brake to engage D or R
Apply brake to engage R
Blind Spot Assist and exit warning currently unavailable See Owner's Manual
Blind Spot Assist and exit warning inoperative
Blind Spot Assist unavailable when towing a trailer See Owner's Manual
Cannot start vehicle See Owner's Manual
Charge high-voltage battery if the vehicle will be parked for an extended period at low outside temperatures.
Charging fault Please change charging method See Owner's Manual
Check brake pads See Owner's Manual
Consult workshop without changing the transmission position
Consult workshop without starting the vehicle again
Cruise control and Limiter inoperative
Cruise control inoperative
Cruise control off
DC charging inoperative Consult workshop
Drive malfunction Achievable speed severely limited See Owner's Manual
Emergency stop initiated To cancel: operate steering wheel and a pedal
Front passenger airbag disabled See Owner's Manual
Front passenger airbag enabled See Owner's Manual

Hazard warning lamp system Malfunction
Head-up display currently unavailable See Owner's Manual
Head-up display inoperative
High-voltage battery malfunction. Consult workshop without starting the vehicle again
High-voltage battery malfunction. No start in approx. XXX km Consult workshop (red display message)
High-voltage battery malfunction. No start in approx. XXX km Consult workshop (yellow display message)
Inoperative indicator lamp in driver display. Consult workshop
Limiter inoperative
Login failed Change authentication method or charging station
N permanently active Risk of vehicle rolling
Not possible to unlock charging cable See Owner's Manual
Occupant presence reminder inoperative
Only select P when vehicle is stationary
PARKTRONIC inoperative See Owner's Manual
Place the key in the marked space See Owner's Manual
Please wait in READY status Warming battery See Owner's Manual
PRE-SAFE inoperative See Owner's Manual
Reduced drive power See Owner's Manual
Reversing not poss. Consult workshop
Risk of vehicle rolling away Driver's door open Transmission not in P
Speed limit (winter tyres) XXX km/h
Speed Limit Assist currently unavailable See Owner's Manual
Speed Limit Assist inoperative
Stop vehicle Leave engine running Wait Transmission cooling
To switch off the vehicle, press the Start/Stop button for at least 3 seconds or 3 times
Traffic Sign Assist currently unavailable See Owner's Manual
Traffic Sign Assist inoperative

Transmission Malfunction Stop
Tyre press. monitor currently unavailable
Tyre press. monitor inoperative
Tyre pressure monitor inoperative No tyre pressure sensors
Vehicle is ready to drive Shutdown occurs when locked or automatically in a few minutes
Vehicle not currently being charged Try a different charging station
Wiper Malfunction

Displaying road names/house numbers

Distance control

Distance warning

DISTRONIC

Dolby Atmos®

Calling up Dolby Atmos®
Information

Door

Additional door lock
Child safety lock (rear door)
Emergency key
Opening (from the inside)
Unlocking (inside)

Door control panel

Seat operation

Drinks holder

Drive Away Assist

Drive position

Drive program display

Drive programs
- Function
- Selecting

Drive system
- Manual switch-off

Driver display
- Identifying malfunctions
- Service due date
- Using

Driver's display, Instrument cluster
- Assistant display
- Classic menu
- Head-up display
- Instrument cluster
- Menus
- Navigation menu
- Notes
- Off-road menu
- Service menu
- Sport menu
- Status displays
- Understated menu

Driver's seat
- Adjusting (Seat Comfort)
- Adjusting (without seat comfort)
- Adjusting electrically
- Easy entry and exit feature

Seat heating

Driving abroad

Light adjustment low beam

Driving safety system

ABS (Anti-lock Braking System)

Active Brake Assist

Active Lane Keeping Assist

Active Steering Assist

Adaptive brake lights

ATTENTION ASSIST

BAS (Brake Assist System)

Blind Spot Assist

Cameras

Cruise control

EBD (Electronic Brakeforce Distribution)

ESP® (Electronic Stability Program)

Hill Start Assist

HOLD function

Overview

Radar and ultrasonic sensors

Speed Limit Assist

STEER CONTROL

Traffic Sign Assist

Your responsibility

Driving system

Driving tips

Acoustic presence indicator (sound generator)

Electric mode
General driving tips
Light adjustment when driving abroad
Recuperation
Running-in notes
Drowsiness detection
Duplicate key
Dynamic handling control system
DYNAMIC SELECT
Calling up the fuel consumption indicator
Configuring drive program I
Displaying vehicle data
Drive program display
Drive programs
Function
Selecting the drive program

E

E-mails

Easy entry feature
- Function
- Setting

Easy exit feature
- Function
- Setting

EBD, Electronic Brakeforce Distribution

ECO Assist
- Function

ECO display

Electric Intelligence
- Route with charging stations

Electric mode, Notes

Electric parking brake
- Applying automatically

- Emergency braking
- Manually applying/releasing
- Releasing automatically

Electrical fuses

Electromagnetic compatibility
- Declaration of conformity

Electronic Stability Program

Emergency
- Emergency guide
- Fire extinguisher
- First-aid kit (soft sided)
- Overview of aids
- Safety vest
- Warning triangle

Emergency braking
- Active Brake Assist
- Brake Assist System (BAS)
- Carrying out
- Electric parking brake/handbrake

Emergency call
- Automatic
- Manual

Emergency call system
- Digital Extras

Emergency key
- Door
- Inserting/removing
- Tailgate

Emergency operation mode
- Start the vehicle

Emergency shutoff (high-voltage on-board electrical system)

Emergency start (drive system)

Emergency stop assistant

ENERGIZING Coach

- Calling up
- Function

ENERGIZING COMFORT

- Overview of programmes
- Starting programme

Energy flow display

- Calling up
- Function/notes

Engine

- Emergency operation mode
- Engine number
- Starting assistance
- switching off (start/stop button)

Engine electronics

Engine number

Engine start

- Emergency operation mode

Engine starting

- Start/stop button

Entering characters

- Deleting the user dictionary
- Function/notes
- Setting the keyboard language
- using the touchscreen

Environmentally friendly driving

ESC, Electronic Stability Control

ESP®
- Activating/deactivating
- Crosswind Assist
- Function
- Trailer stabilisation

EU type approval number

Exit warning
- Blind Spot Assist

Exiting a parking space
- Active Parking Assist
- Drive Away Assist
- PARKTRONIC

Exterior lighting
- Care
- Light adjustment when driving abroad

Exterior mirrors
- Blind Spot Assist
- Warning lamp

F

Factory settings
- MBUX reset function

Fault message
- Driver's display

Favourites
- Adding a destination
- Calling up
- Deleting
- Home address
- Moving
- Overview
- Renaming
- Work address

Fire extinguisher

First aid
- First-aid kit (soft sided)

Fitting
- Snow chains
- Tyres/wheels

Fitting accessories
- Limited protection

Fitting the licence plate (front)

Flat towing
- Pulling/towing

Flat tyre
- MOExtended
- Notes
- TIREFIT kit
- Wheel change

Flexible charging system Pro

Floor mats

Foil covering
- On camera/sensors
- Radar and ultrasonic sensors

Free software

Frequencies
- Mobile phone
- Two-way radio

Front airbag
- Inflating

Front headlamps

Front passenger airbag
- Disabling/enabling

Front passenger airbag shutoff
- Information (child restraint system on the front passenger seat)

Front passenger seat
- Adjusting (Seat Comfort)
- Adjusting (without seat comfort)
- Adjusting electrically

Fuel consumption indicator

Function in the event of an accident

Function seat

Fuses

- Engine compartment
- Front passenger footwell
- Fuse assignment diagram
- Load compartment
- Notes

G

G-meter (driver's display, Sport menu)
Special programming modes (if required)
Gallery app
Operating
Garage door opener
Deleting the HomeLink® buttons
Performing rolling code synchronisation (if required)
Problem
Programming the HomeLink® buttons
General driving tips
Genuine parts
Global search
Function
Overview
Glove compartment
Locking/unlocking
Grab handles
Greeting tone
Switching the greeting tone on/off
Gross mass

H

Handbrake

Handling characteristics

- Unusual

HANDS-FREE ACCESS

Hands-free system

Hazard warning lights

Hazard warnings

- Car-to-X-Communication

Head restraint

- Adjusting (rear)
- Adjusting manually (front)
- Removing/fitting (rear)

Head-up display

- Care
- Function
- Memory function

- Operating
- Switching on/off

Headlamp flashing

Headlamps

Headliner care

Heating

- Activating/deactivating
- Seat

Steering wheel

Help call

Mercedes-Benz emergency call system

High beam

High-pressure cleaner

High-voltage battery

Charge level display

Charging ahead of the departure time

Charging cable control panel

Charging duration

Charging station, mode 3

Configuring a weekly profile

Connection types

Disconnect device

Ending the charging process (alternating current, mode 2/3)

Ending the charging process (direct current, mode 4)

Energy flow display

Flexible charging system Pro

General notes on charging

Mains socket, mode 2

Maximum charging current (mains socket)

Notes

Range

Range maximisation

Rapid charging station, mode 4

Recuperation

Starting the charging process (alternating current, mode 2/3)

Starting the charging process (direct current, mode 4)
Stowing the charging cable
Type
Voltage types
Wallbox, mode 3

High-voltage on-board electrical system

Charging cable control panel
Disconnect device
Indicator lamps on vehicle socket

Manual switch-off

Hill Start Assist

HOLD function

Function
Switching on/off

Home screen

Central display

I

i-Size child restraint system
- Fitting
- Suitable seats

Identification plate
- Engine
- Refrigerant
- Vehicle

Immediate pre-entry climate control

Immobiliser

Implied warranty

Importer information
- Regulatory radio information

In-Car Office
- Answering e-mail
- Calling up
- Creating an e-mail
- Forwarding e-mail
- Managing e-mails
- Marking a task as completed
- Selecting functions (calendar entry)
- Selecting functions (Tasks & Calls)

Incorrect behaviour by vehicle occupants
- Limited protection

Increase in traffic information volume

- Setting

Indicator lamps/warning lamps

- PASSENGER AIR BAG

Indicator/warning lamps

- Overview

Individual drive program

- Configuring

Inside rearview mirror

Interior lighting

- Ambient lighting
- MBUX reading light
- Setting
- Switch-off delay time

Interior protection

Intermediate destination

- Editing
- Starting the automatic service station search

Internet

- Calling up a web page
- Calling up the web browser settings
- Calling up web browser options
- Deleting a bookmark
- Deleting browser data
- Managing bookmarks
- Setting up a Wi-Fi hotspot
- Smartphone integration

Web browser in the background
Web browsers

Internet connection

Cancelling permission (mobile phone)
Disconnecting automatically (communication module)
Displaying the connection status
Establishing
Information
Overview of connection status
Restrictions
Setting access data (Bluetooth®)
Setting up (communication module)
Setting up (Wi-Fi)
Setup (Bluetooth®)

iPhone®

Smartphone integration

ISOFIX child restraint system

Fitting
Suitable seats

J

Jack

- Declaration of conformity
- Storage location

Jump-start connection

K

Key

- acoustic locking verification signal
- Activating/deactivating pre-entry climate control
- Battery
- Deactivating a function
- Emergency key
- Energy consumption
- Function
- Key ring attachment
- Problem
- Replacement key
- Unlocking setting

KEYLESS-GO

- Deactivating
- Locking/unlocking the vehicle
- Problem
- Unlocking setting

Knee airbag

L

Lane Keeping Assist

Lane recognition

Active Lane Keeping Assist

Language

Notes

Setting

Last destinations

Selecting

Light adjustment

Driving abroad

Light switch

Lighting

Interior lighting

Lights

Adaptive brake lights

Adaptive Highbeam Assist

Automatic driving lights

Combination switch

Hazard warning lights

High beam

Interior lighting

Light adjustment when driving abroad

Locator lighting

Reading lamp

Rear fog light
Responsibility for lighting systems
Switch-off delay time
Turn signal light

Limiter

Activating/deactivating
Buttons
Calling up a speed
Function
Passive mode
Permanent setting
Requirements:
Selecting
Setting a speed
Storing a speed

LINGUATRONIC

Radio voice commands

Live Traffic Information

Displaying the traffic map
Displaying traffic incidents
Extending a subscription
Information from the service provider
Registering

Load capacity

Bicycle rack

Load compartment cover
- Extending/retracting
- Notes
- Removing/fitting

Load compartment floor
- Opening/closing

Loading
- Bag hook
- Clothes hook
- Notes
- Opening/closing the load compartment floor
- Roof luggage rack
- Tie-down eyes

Loading guidelines

Loads

Locator lighting

Locking/unlocking
- Additional door lock
- Automatic locking (MMS)
- Doors (from the inside)
- Emergency key
- KEYLESS-GO
- Mercedes-Benz Connect

Loud sound
- PRE-SAFE® Sound

Low beam
- Activating/deactivating

Light adjustment when driving abroad >

lubricants >

Luggage >

Luggage rack >

Lumbar support >

M

Maintaining safe distance
- Active Distance Assist DISTRONIC

Maintenance

Maintenance Management
- Notes
- Transferred data

Maintenance work, Information on regular performance

Malfunction
- Driver display
- Restraint system

Manoeuvering brake function

Manoeuvring
- Manoeuvering brake function

Manoeuvring assistant
- Activating/deactivating
- Drive Away Assist
- Manoeuvering brake function

Manual gearshifting
- Activating/deactivating

Map, Traffic map
- Avoiding an area
- Avoiding an area (overview)
- Changing an area

Deleting an area
Displaying online map contents
Displaying Qibla
Displaying the compass
Displaying the map version
Displaying the range
Displaying the satellite map
Displaying the traffic map
Displaying weather information
Map data
Moving
Route overview after start
Selecting additional information
Selecting POI symbols
Setting the map scale
Setting the map scale automatically
Updating
Map functions
Massage programmes
Maximum full-stop braking
Maximum permissible gross vehicle mass
Maximum speeds
MB Apps
Calling up Digital Extras
Calling up the Mercedes me ID user account
Unlinking the Mercedes me ID user account

MBUX

- Dashcam

MBUX Interior Assistant

- Favourites
- Lasers and laser classification
- Operating functions by proximity of your hand
- Overview
- Reading light
- Search light
- Selecting settings
- Using the favourites pose

MBUX multimedia system

- Authorisations
- Configuring display settings
- Display settings
- Drive programs
- ENERGIZING COMFORT programmes (overview)
- ENERGIZING seat kinetics
- Factory setting
- Global search
- Home screen
- Language settings
- MB Apps
- MBUX Interior Assistant
- Overview
- Set keyboard
- Setting collision detection

Setting route-based speed adaptation
Starting the ENERGIZING COMFORT programme
Steering wheel heater/seat heating
Touchscreen
MBUX reading light
MBUX search light
MBUX SOUND DRIVE
Information
Operating
MBUX Voice Assistant
E-mails
Function
Language setting
Media voice commands
Online voice commands
Online voice control
Operable functions
Operating safety
Setting
Speech quality
Voice commands
Voice prompting
Mecca
Media
General information
Media mode
Adding a favourite song

Connecting Bluetooth® audio equipment
Connecting USB devices
Controlling media playback
Copyright and trademarks
Information about the search function in categories
Overview of the media menu
Playing back similar music tracks
Removing a favourite song
Starting a search in categories
Starting media playback
Supported formats and data storage media
Surprise mix
Using the keyword search
Medical aids
Memory function
Head-up display
Outside mirrors
Seat
Menus (driver's display), Steering-wheel buttons
Assistant display
Classic menu
Navigation
Notes
Off-road
Operating
Service
Sport

Understated menu

Mercedes me Charge, Paying

Charging stations display

Mercedes-Benz App

Activating Digital Extras

Mercedes-Benz Connect

Information

Transferred data

Mercedes-Benz emergency call system, Call for help

Automatic emergency call

Availability

Data processing

Data transfer

Manual emergency call

Overview

Self-diagnosis

Mercedes-Benz GenuineParts

Mercedes-Benz service centre

Mercedes-Benz Support

Accident/Breakdown Management

Mercedes-Benz Support Calls

Arranging a service appointment

Calling Mercedes-Benz Support after automatic accident/breakdown detection

Calls via the overhead control panel

Consent to data transfer

Information

Mercedes-Benz Support
Transferred data
Message memory
Messages, Short messages
Calling a message sender
Deleting
Dictating
Forwarding
MBUX voice commands
Overview
Read-aloud function
Reading
Replying
Sending
Setting the displayed text messages
Using a phone number or URL
Mirrors
Mirror folding function
Outside mirrors
Rear-view mirror
Mobile phone
Cancelling permission for Internet connection
Frequencies
Maximum transmission output
Smartphone integration
Telephone
Model type

Modification

- Limited protection >

MOExtended tyres, Run-flat tyres >

Multimedia system

- Activating/deactivating voice amplification to rear >

Music online

- Adding providers >
- Calling up >
- Calling up the settings >
- Requirements: >
- Search function >

N

Navigation
- Activating
- Destination entry
- Electric Intelligence
- Information
- MBUX voice commands
- Menu (driver display)
- Overview
- Route with charging stations
- Updating the map data

Navigation announcements
- Activating/deactivating
- Adjusting the volume
- Repeating
- Switching audio fadeout on/off

Near Field Communication (NFC)
- Information

Near-field communication
- Activating/deactivating

Neutral

NFC

Notifications Centre
- Calling up a notification

Editing a notification >
Message types >
Overview >
Selecting actions >

O

Objects in the vehicle interior
Limited protection
Occupant safety
Airbag
Basic information
Child seat
Information on the child restraint system
Information on the correct seat position
Passive occupant presence reminder
Pets in the vehicle
PRE-SAFE®
Pregnancy (seat belt)
Off-road
On-board diagnostics interface
On-board electronics
Engine electronics
Two-way radios
Online services
Open Source Software
Opening angle
Limiting (tailgate)
Opening the tailgate using your foot
HANDS-FREE ACCESS

Operating fluids

- Brake fluid
- Coolant
- Notes
- Refrigerant (air conditioning system)
- Windscreen washer fluid

Operating safety

Outside mirrors

- Automatic mirror folding function
- Folding in/out
- Memory function
- Parking position
- Setting

Overhead control panel

P

Paint code
Park position
Parking
- Active Parking Assist
- PARKTRONIC
- Prior booking

Parking Assist
- Active Parking Assist
- PARKTRONIC

Parking Assist PARKTRONIC
- Activating/deactivating
- Adjusting warning tones
- Function

Parking assistance systems
- Active Parking Assist
- Drive Away Assist
- Manoeuvering brake function
- PARKTRONIC

Parking brake
Parking charges
- Paying

Parking lights
Parking option
- Displaying on the map

Parking position

- Outside mirrors
- Storing the front-passenger outside mirror using the memory button
- Storing the position of the passenger outside mirror using reverse gear

Parking service

- Displaying a parking option on the map
- Paying parking charges
- Prior booking of a parking space
- Selecting parking options

Parking space

- Finding

PARKTRONIC

Partitioning net

PASSENGER AIR BAG

- Status display, front passenger air-bag

Passive occupant presence reminder

- Activating/deactivating
- Function

Pedestrian protection

Permissible axle load

Permitted towing methods

- Overview

Pets in the vehicle

Photos

- Gallery app

PIN protection

- System PIN protection

Plastic trim care

POI

- Selecting

POI symbols

- Selecting

Post-collision brake

Power (driver's display, Sport menu)

Power display

- Function/notes

Power supply

- Start/stop button
- Switching on (start/stop button)

Pre-entry climate control

- activating/deactivating for departure time
- At time of departure
- immediate

Pre-entry climate control for departure time

- Adjusting

Pre-entry climate control using the key

- Activating/deactivating
- Function
- Setting

PRE-SAFE®, Anticipatory occupant protection

- Function
- PRE-SAFE® Sound
- Reversing measures

Pregnancy

- Information on the correct seat position
- Seat belt

Preventative occupant protection system

Program

Protection

- Limited

Protection against collision

- Manoeuvering brake function

Protection of the environment

- Driving style
- Take-back of end-of-life vehicles

Pulling away

- Hill Start Assist

Q

Qibla

QR code rescue card

Qualified specialist workshop

R

Radar and ultrasonic sensors

Radio

- Activating
- Activating/deactivating radio text
- Calling up a slide show
- Calling up the station list
- Deleting stations
- Displaying radio text
- Editing station presets
- Entering a frequency directly
- Frequency fix
- Managing favourites
- MBUX voice commands
- Menu
- Moving stations
- Overview
- Searching for a channel
- Setting a channel
- Setting station tracking
- Setting station tracking (Internet Radio)
- Setting the frequency band
- Setting the traffic information service volume increase
- Station suggestion
- Storing radio stations

Switching a slide show off/on
Voice commands (LINGUATRONIC)

Radio (audio system)

Switching traffic announcements on/off

Radio announcements

Activating or deactivating
Selecting

Radio regulations

Importer information

Regulatory radio identification
Specific absorption rate
Wireless applications

Rain closing function

Side windows
Sliding sunroof

Rain sensor

Side windows
Sliding sunroof

Windscreen wipers

Range

Notes

Range maximisation, ERM (Extended Range Mode)

Activating/deactivating
Function

Range monitor

Activating/deactivating

Range on map
on map
REACH regulation
Reading lamp
Interior lighting
Rear door (child safety lock)
Securing
Rear fog lamp
Rear fog light
Rear seat
Adjusting the backrest
Adjusting the backrest angle
Rear seat belt
Status display
Rear window heater
Rear window wiper
Automatically active
Replacing wiper blade
Switching on/off
Rear-view mirror
Automatic anti-glare mode
Rearward-facing child seat
Information
Recuperation
Function
Setting
Recuperative braking (driver's display, Sport menu)

Recycling
Refrigerant
Registration
Replacement key
Resetting
- MBUX reset function

Responsibility
- Driving safety systems

Restraint system
- Basic information
- Basic instructions for children
- Deployment situations
- Functionality
- Information on function
- Information on the correct seat position
- Limited protection
- Malfunction
- Protection
- Self-test
- Warning lamp

Reverse gear
Reversing camera
- 360° Camera
- Activate via GPS
- Function
- Manage activation points

Opening the camera cover >

Roll away protection >

Roller sunblind

Sliding sunroof >

Roof load >

Roof load display

Information >

Roof luggage rack

Loading >

Securing >

Route

Accepting a detour recommendation >

Alternative route >

Calculating alternative routes >

Calculating with Electric Intelligence >

Charging near destination >

Commuter route >

Digital Extra Range Display >

Displaying destination information >

Displaying the route list >

Editing a stored route >

Electric Intelligence >

Electric Intelligence (overview) >

Navigation >

Planning >

Recording >

Saving a recorded route >

Selecting a type
Selecting notifications
Selecting options
Selecting settings for charging stations (navigation with Electric Intelligence)
Starting a saved route
Starting the automatic service station search
Switching the range monitor on/off

Route guidance

Cancelling
Changing direction
Destination reached
Lane recommendations
Motorway information
Notes
Off-road

Route guidance with augmented reality

Activating
Activating/deactivating the traffic light view
Displaying road names/house numbers
Overview

Route-based speed adaptation

Function
Setting

Run-flat characteristics

Running-in notes

S

Safety system
Safety vest
Satellite map
Saving a destination suggestion as a favourite
Searching for a channel
Seat, Through-loading feature
Adjusting (Seat Comfort)
Adjusting (without seat comfort)
Adjusting backrests (rear)
Adjusting electrically
adjusting manually (rear)
Adjusting the angle of the backrests (rear)
Automatic adjustment
Correct driver's seat position
ENERGIZING seat kinetics
Folding back the backrest (rear)
Folding back the backrest on the third row of seats
Folding the backrest (rear) forwards to get in (third row of seats)
Folding the backrest forwards (rear)
Folding the backrest on the third row of seats forwards
Lumbar support
Memory function
Resetting the settings
Settings

Side airbag

Seat belt

Activating/deactivating seat belt adjustment
Automatic tightening
Care
Fastening
Notes on wearing correctly
Rear seat belt status display
Releasing
Warning lamp
Wearing during pregnancy

Seat belt adjustment

Activating/deactivating
Function

Seat belt tensioners

Inflating

Seat belt warning

Seat heating

Activating/deactivating

Seat kinetics

Setting

Seat ventilation

Activating/deactivating

Second telephone

Connecting

Selecting the sound profile
- Burmester® surround sound system >

Selector lever >

Self-test
- Automatic front passenger airbag shutoff >
- Restraint system >

Sensors
- Cleaning >
- Information >

Service
- Menu (driver's display) >

Service centre >

Service due date >

Service interval display >

Service station search
- Starting automatic search >

Setting the date format >

Setting the distance unit >

Settings
- Information >

Shortening the braking distance
- Brake Assist System (BAS) >

Shunting support >

Side airbag >

Side window
- Close with key >
- Convenience closing >

Convenience opening
Opening with the key
Opening/closing
Window films

Side windows

Automatic function
Child safety lock (rear)
Problem
Rain closing function

Skid chains

Sliding sunroof, Panorama sliding sunroof

Automatic functions
Close with key
Opening with the key
Opening/closing
Problem
Rain closing function

Smartphone integration

Apple CarPlay®/Android Auto

Snow chains

Socket

12 V (boot/load compartment)
12 V (front centre console)
115 V (rear passenger compartment)
Trailer operation

Socket flap

SOS button

Sound

- PRE-SAFE® Sound
- Wheels/tyres

Sound Experience

- Calling up Sound Experience
- Information

Sound generator

Sound settings

- Adjusting treble, mid-range and bass settings
- Automatic loudness normalisation
- Calling up the sound menu
- Setting the balance and fader

Spare parts

Spare wheel, Emergency spare wheel

Specialist workshop

Specific absorption rate (SAR)

Speed

- Limit, Limiter

Speed adjustment, route-based

Speed control

- Active Distance Assist DISTRONIC
- Cruise control
- Limiter

Speed limit

- Winter tyres

Speed Limit Assist
- set
- System limits

Standing lights

Start-off assist
- Hill Start Assist

Start/stop button
- Parking the vehicle
- Starting the vehicle
- Switching on the power supply / vehicle

Starting assistance

Starting the engine
- Start/stop button

Starting-off aid
- Drive Away Assist
- Hill Start Assist

Station
- Deleting
- Entering a frequency directly
- Frequency fix
- Managing favourites
- Moving
- Setting
- Storing

Station list
- Calling up

Station presets
Editing
Station suggestion
Radio
Station tracking
Setting
Setting (Internet Radio)
Status display
Front passenger airbag
Rear seat belt
Steer Assist
Active Steering Assist
STEER CONTROL
STEER CONTROL
Steering wheel
Driver's airbag
Manually adjusting
Steering wheel heater
Steering wheel care
Steering wheel heater
Air conditioning menu
Decoupling from the seat heating
Stopping
Parking the vehicle
Storing the
speed, cruise control
speed, DISTRONIC

speed, limiter

Stowage areas

Stowage space underneath the load compartment floor

Opening/closing

Stowage spaces

Armrest (front)

Centre console (front)

Door

Glove compartment

Streaming online music

Suggestions

Configuring

Deleting

Suspension

Adaptive Damping System

SVHC

Substances of very high concern

Switch-off delay time

Exterior

Interior

Switching air-recirculation mode on/off

Switching loudness normalisation on/off

Advanced sound system

Burmester® surround sound system

System PIN protection

Activating/deactivating

System settings

Activating/deactivating system PIN protection >
Activating/deactivating voice amplification to rear >
MBUX reset function >
Setting the distance unit >
Setting the time zone >
Setting the time/date format >
Switching near-field communication (NFC) on or off >
Transmission of the vehicle position >

T

Tabs
- managing

Tailgate, Boot lid
- Closing
- Emergency key
- HANDS-FREE ACCESS
- Limiting the opening angle
- Opening

Take-back of end-of-life vehicles

Technical data
- Axle load (trailer operation)
- Fastening points of the trailer hitch
- High-voltage battery
- Information
- Maximum speeds
- Mounting dimensions of a trailer hitch
- Overhang dimension of the trailer hitch
- Radio frequencies
- Radio regulations
- Roof load
- Specific absorption rate (SAR)
- Tongue weight
- Towing capacity
- Vehicle dimensions

Telediagnosis
- Diagnostic data

Telediagnostics
- Transferred data

Telephone, Smartphone
- Activating functions during a call
- Calls with several participants
- Changing a function
- Charging wirelessly (mobile phone)
- Connecting a mobile phone
- Disconnecting a mobile phone
- Emergency call
- Importing contacts
- Importing contacts (overview)
- Incoming call during an existing call
- Information
- Interchanging mobile phones
- MBUX voice commands
- Notes
- Operating modes
- Reception and transmission volume
- Secure Simple Pairing
- Setting the ringtone
- Smartphone integration
- Telephone menu overview
- Telephone operation
- Voice recognition

Telephone (audio system)
- Replacing a mobile phone

Telephony operating modes
- Bluetooth® telephony

Television, Digital TV
- MBUX voice commands

Temperature
- Setting the vehicle interior temperature

Text messages

Third row of seats, Through-loading feature
- Folding back the backrest on the third row of seats
- Folding the backrest on the third row of seats forwards
- Getting in/out
- Height limit

Tie-down eyes

Time
- Manual time setting
- Setting the time zone
- Setting the time/date format

TIREFIT kit, Tyre inflation compressor
- Declaration of conformity
- Storage location

Tone settings
- Information

Tongue weight

Top Tether

Touch Control
- Driver display
- MBUX
- Setting the sensitivity

Touch-sensitive controls

Touchscreen
- Entering characters

Tow bar system
- Towing away

Tow-away protection

Tow-starting

Towing
- Pulling/towing
- Towing methods

Towing eye
- Storage location

Towing methods
- Both axles on the ground

Overview

Traffic announcements (audio system)
- Switching on/off

Traffic information
- Car-to-X-Communication
- Displaying the traffic map
- Displaying traffic incidents
- Extending a Live Traffic Information subscription
- Information on Live Traffic Information

Overview
Registering Live Traffic Information
Traffic light view
Activating/deactivating
Information
Traffic light warning/display
Traffic Sign Assist
Function
Setting
Trailer coupling
Trailer drawbar, Pulling/towing
Trailer hitch
Axle load
Bicycle rack
Care
Coupling up/uncoupling a trailer
Fastening points
Folding the ball neck out/in
General notes
Mounting dimensions
Overhang dimension
Socket
Tongue weight
Towing capacity
Trailer operation
Active Lane Keeping Assist
Axle load

Bicycle rack
Coupling up/uncoupling a trailer
Folding the ball neck out/in
Making settings
Notes
Socket
Trailer stabilisation
Transferred vehicle data
Android Auto
Apple CarPlay®
Transmission
Crawler mode
DIRECT SELECT lever
Drive programs
DYNAMIC SELECT button
Engages neutral
Engaging drive position
Engaging reverse gear
Selecting park position
Transmission position display
Transmission positions
Transmission position display
Transporting
Vehicle
TuneIn
Deleting stations
Logging out

Overview
Registering
Saving stations
Selecting and connecting a station
Selecting stream
Setting options
Turn signal indicator
Turn signal light
TV
MBUX voice commands
Two-way radios
Frequencies
Installation
Transmission output
Type approval number EG
Tyre pressure
checking
Notes
TIREFIT kit
Tyre pressure table
Tyre pressure monitoring system
Function
Restarting
Tyre pressure table
Tyre sealant
Tyre tread

Tyre-change tool
Tyre-change tool kit
Tyres
Breakdown
Checking
Checking temperature
Fitting
Interchanging
MOExtended
Noise
Notes on fitting
Removing
Replacing
Selection
Snow chains
Storing
TIREFIT kit
Tyre pressure table
Unusual handling characteristics

U

Understated menu display content
- Selecting

Unfastening

Units of measurement
- Setting

Unlocking setting

Updating software, System update, Update
- Error message
- Information
- Performing

URL
- Sharing

USB port
- Rear
- Stowage compartments (front)

USB port (multimedia system)
- Connecting devices

User profiles, Personalisation
- Adding a user
- Notes
- Overview
- Requirements for use
- Selecting a user

Selecting options >
Synchronising >
User-specific content >

V

Variable limiter
Vehicle, Switching on the ignition
Additional door lock
Collision detection (information)
Correct use
Data storage
Diagnostics connection
Emergency key
Implied warranty
Information
KEYLESS-GO
lock automatically (MMS)
Lock/unlock (emergency key)
Locking/unlocking (from inside)
Lowering
Medical aids
QR code rescue card
Raising
REACH regulation
Registration
Setting collision detection
Starting (start/stop button)
starting, emergency operation mode
Stopping

SVHC/substances of very high concern
Switching off
switching off (start/stop button)
Switching on (start/stop button)
Towing
Towing away
Transporting
Ventilation / convenience opening
Voice commands for MBUX voice assistant
Vehicle cameras
Vehicle data
Display, MBUX
Displaying, DYNAMIC SELECT
Maximum speeds
Roof load
Transferring to Android Auto
Transferring to Apple CarPlay®
Vehicle height
Vehicle length
Vehicle width
Wheelbase
Vehicle dimensions
Vehicle identification number
Vehicle identification plate
Axle load
EU type approval number
Gross mass

Model type
Paint code
VIN
Vehicle key
Vehicle location
Switching transmission on/off
Vehicle position
Storing
Vehicle sensors
Vehicle socket
Care
Indicator lamps
Vehicle start
Emergency operation mode
Start/stop button
Vehicle tool kit
TIREFIT kit
Towing eye
Ventilation
Vents
Air vents
Video recordings
Gallery app
VIN
Engine compartment
Identification plate
Seat

Vision

Demisting windows >

Voice amplification to the rear

Activating/deactivating >

Voice assistant

Voice prompting >

Voice recognition >

W

Warning system

Warning triangle

Warning/indicator lamp

- ABS warning lamp
- Active Brake Assist warning lamp
- ATTENTION ASSIST warning lamp
- Brakes warning lamp (red)
- Brakes warning lamp (yellow)
- Electric parking brake indicator lamp (red)
- Electric parking brake indicator lamp (yellow)
- Electrical fault warning lamp
- ESP® OFF warning lamp
- ESP® warning lamp flashes
- ESP® warning lamp lights up
- Mercedes-Benz emergency call system warning lamp
- Passive occupant presence reminder warning lamp (white)
- Passive occupant presence reminder warning lamp (yellow)
- Power steering warning lamp (red)
- Power steering warning lamp (yellow)
- Reduced-power warning lamp
- Restraint system warning lamp
- Seat belt warning lamp flashes
- Seat belt warning lamp lights up
- Speed Limit Assist warning lamp

System error warning lamp
Traffic Sign Assist warning lamp
Trailer hitch warning lamp
Tyre pressure monitoring system warning lamp flashes
Tyre pressure monitoring system warning lamp lights up
Warning lamp for distance warning

Warning/indicator lamps

Overview
PASSENGER AIR BAG

Washer fluid

Topping up
Windscreen washer fluid

Washing by hand

Water tank

Wear

Limited protection

Weather information

Web browser

Calls up options
Deleting browser data

Web browsers

Calling up a web page
Calling up the settings
Deleting a bookmark
Managing bookmarks
Setting in the background

Sharing URLs
Tabs
Website
Mercedes-Benz Connect
Weight information
Welcome
Wheel change
Fitting a new wheel
Lowering the vehicle
Preparation
Raising the vehicle
Removing a wheel
Wheel rotation
Wheels
Breakdown
Care
Checking
Checking tyre temperature
Fitting
Interchanging
MOExtended
Noise
Notes on fitting
Removing
Replacing
Selection
Snow chains

Storing
TIREFIT kit
Tyre pressure
Tyre pressure monitoring system
Unusual handling characteristics
Wi-Fi
Activating/deactivating
Information on connection
Setting up a hotspot
Setting up an Internet connection
Widescreen cockpit driver's display
Instrument cluster
Window airbag
Windows
Care
Convenience opening
Opening with the key
Opening/closing
Opening/closing (air recirculation button)
Removing mist
Window films
Windscreen
Demisting
Windscreen washer fluid
Windscreen washer system
Windscreen wipers
Activating/deactivating

Replacing the wiper blades >
Replacing the wiper blades (windscreen) >
Replacing wiper blades (rear window) >

Winter operation

Snow chains >

Winter tyres

Limiter >
Setting the permanent speed limit >

Wiper blades

Care >
Replacing (windscreen) >

Wipers >

Wireless applications >

Wireless charging

Mobile phone >

Workshop >

Publication details

WEBSITE
Further information about Mercedes-Benz vehicles and about Mercedes-Benz AG can be found on the following websites:

https://www.mercedes-benz.com

https://group.mercedes-benz.com

EDITORIAL TEAM
You are welcome to forward any queries or suggestions you may have regarding this Owner's Manual to the technical editorial team at the following address:

Mercedes-Benz AG, HPC: CAC, Customer Service, 70546 Stuttgart, Germany

© Mercedes-Benz AG: Not to be reprinted, translated or otherwise reproduced, in whole or in part, without written permission from Mercedes-Benz AG.

VEHICLE MANUFACTURER
Mercedes-Benz AG

Mercedesstraße 120

70372 Stuttgart, Germany

F243 0102 02