Disclaimer

The following version of the Owner‘s Manual describes all models, series and special equipment of your vehicle. Country-specific language variations are possible. Please note that your vehicle might not be equipped with all the described functions. This also affects safety-relevant systems and functions. Please contact your authorised Mercedes-Benz dealership if you would like to receive a printed Owner‘s Manual for other vehicle models and vehicle model years.

The online Owner‘s Manual is the current and valid version. It is possible that deviations affecting your specific vehicle could not be taken into account as Mercedes-Benz constantly adapts its vehicles according to the latest technology and makes changes to the form and the equipment.

Please also read the printed Owner‘s Manual, supplementary documents and the digital Owner‘s Manual in the vehicle.

Copyright
All rights reserved. All texts, images and graphics are subject to copyright and other laws for the protection of intellectual property. They may not be copied or changed for any commercial use or for the purpose of being passed on nor used on other websites.



Mercedes-Benz



E-Class Estate

Owner's Manual

Mercedes-Benz

Symbols

In this Owner's Manual, you will find the following symbols:

DANGER Danger due to not observing the warning notices

Warning notices draw your attention to hazards that may endanger your health or life, or the health or life of others.

▶ Please observe the warning notices in this Owner's Manual.

ENVIRONMENTAL NOTE Environmental damage due to failure to observe environmental notes

Environmental notes include information on environmentally responsible behaviour or environmentally responsible disposal.

▶ Observe environmental notes.

NOTE Damage to property due to failure to observe notes on material damage

Notes on material damage inform you of risks which may lead to your vehicle being damaged.

▶ Observe notes on material damage.

ⓘ Useful instructions or further information that could be helpful to you.

▶ Instruction

(→ page) Further information on a topic

Display Information in the multifunction display/multimedia display

 Highest menu level, which is to be selected in the multimedia system

 Corresponding submenus, which are to be selected in the multimedia system

* Indicates a cause

Welcome to the world of Mercedes-Benz

Before you first drive off, read this Owner's Manual carefully and familiarise yourself with your vehicle. For your own safety and a longer vehicle life, follow the instructions and warning notices in this manual. Disregarding them may lead to damage to the vehicle or personal injury.

The equipment or model designation of your vehicle may vary according to:

- model
- order
- national version
- availability

The illustrations in this manual show a left-hand drive vehicle. On right-hand drive vehicles, the layout of components and controls differs accordingly.

Mercedes-Benz is constantly updating its vehicles to the state of the art.

Mercedes-Benz therefore reserves the right to introduce changes in the following areas:

- design
- equipment
- technical features

The equipment in your vehicle may therefore differ from that shown in the descriptions and illustrations.

The following are integral parts of the vehicle:

- Digital Owner's Manual
- Printed Owner's Manual
- Service Booklet
- Equipment-dependent Supplements

Keep these documents in the vehicle at all times. If you sell the vehicle, always pass all of the documents on to the new owner.

2135843704Z102

At a glance **4**
Cockpit 4
Warning and indicator lamps 8
Overhead control panel 10
Door control panel and seat adjustment 12
Emergencies and breakdowns 14

Digital Owner's Manual **16**
Calling up the Digital Owner's Manual 16

General notes **17**
Protection of the environment 17
Take-back of end-of-life vehicles 17
Mercedes-Benz GenuineParts 18
Owner's Manual 19
Operating safety 19
Declaration of Conformity 20
Diagnostics connection 22
Qualified specialist workshop 22
Vehicle registration 23
Correct use of the vehicle 23
Implied warranty 23
QR code for rescue card 23
Vehicle data storage 23
Copyright 24

Occupant safety **26**
Restraint system 26
Seat belts 28
Airbags 32
PRE-SAFE® system 39
Children in the vehicle 41
Pets in the vehicle 59

Opening and closing **60**
Key 60
Doors 64
Load compartment 69
Roller sunblinds 75
Side windows 75
Sliding sunroof 79
Anti-theft protection 84

Seats and stowing **86**
Correct driver's seat position 86
Seats 87
Steering wheel 98
Using the memory function 100
Stowage areas 101
Cup holders 116
Ashtray and cigarette lighter 118
Sockets 119
Wireless charging of the mobile phone and connection with the exterior aerial 122
Fitting/removing floor mats 123

Light and sight **125**
Exterior lighting 125
Interior lighting 132
Changing bulbs (only for vehicles with halogen headlamps) 133
Windscreen wipers and windscreen washer system 135
Mirrors 139
Operating the sun visors 141
Infrared reflective windscreen 142

Climate control **143**
Overview of climate control systems 143
Operating the climate control system 145

Driving and parking **155**
Driving 155
DYNAMIC SELECT switch 162
Manual transmission 163
Automatic transmission 164
Refuelling 168
Parking 174
Driving and driving safety systems 181
Trailer hitch 237
Bicycle rack 241

Instrument Display and on-board computer **244**
Instrument display overview 244
Overview of the buttons on the steering wheel 245
Operating the on-board computer 245
Displays in the multifunction display 246
Adjusting the instrument lighting 247
Menus and submenus 247
Head-up Display 253

Multimedia system **255**
Overview and operation 255
System settings 264
Garmin® MAP PILOT navigation module 268
Telephone 269
Online and Internet functions 288
Media 291
Radio 297
Sound 300

Maintenance and care **302**
ASSYST PLUS service interval display 302
Engine compartment 303
Cleaning and care 310

Breakdown assistance **318**
Emergency 318
Flat tyre 320
Battery (vehicle) 326
Tow starting or towing away 330
Electrical fuses 336

Wheels and tyres **339**
Noise or unusual handling characteristics 339
Regular checking of wheels and tyres 339
Notes on snow chains 339
Tyre pressure 340
Wheel change 347
Emergency spare wheel 357

Technical data **359**
Notes on technical data 359
On-board electronics 359
Vehicle identification plate, VIN and engine number 361
Operating fluids 363
Vehicle data 371
Trailer hitch 372

Display messages and warning/indicator lamps **375**
Display messages 375
Warning and indicator lamps 431

Index **448**

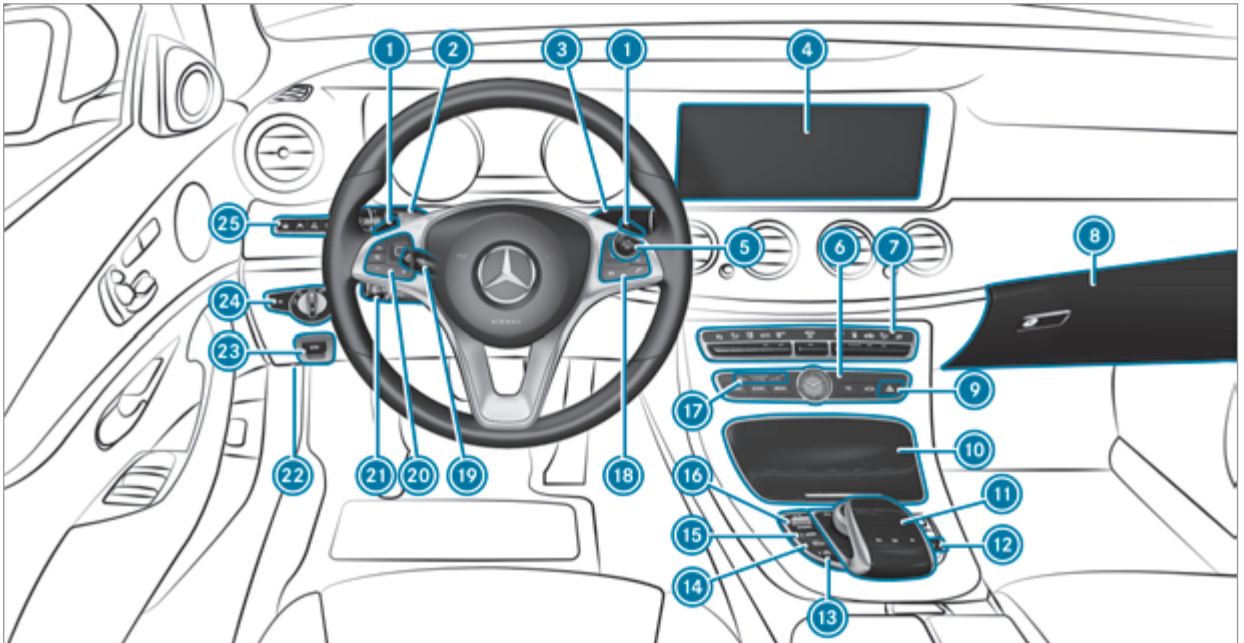

Left-hand drive vehicle

1 Steering wheel gearshift paddle	→	167
2 Combination switch	→	127
3 DIRECT SELECT lever	→	164
4 Display (multimedia system)	→	255
5 Start/Stop button	→	156
6 Control panel for multimedia system	→	255
7 Climate control systems	→	145
8 Glove box	→	103
9 Hazard warning lights	→	128
10 Stowage compartment	→	103
11 Controls for the multimedia system	→	255
12 To lower the rear seat head restraints	→	93
13 ECO start/stop function	→	161
14 Parking Pilot	→	221
15 Setting the vehicle level	→	208
16 DYNAMIC SELECT switch	→	163
17 PASSENGER AIRBAG indicator lamp	→	, 37
18 Control panel for multimedia system	→	245
19 To adjust the steering wheel	→	99
20 Control panel for on-board computer	→	245
21 Cruise control lever	→	194
22 To unlock the bonnet	→	304
23 Electric parking brake	→	178
24 Light switch	→	125
25 Control panel for:		
Steering Pilot	→	204
Active Lane Keeping Assist	→	235
Parking Assist PARKTRONIC	→	212
Head-up display	→	254

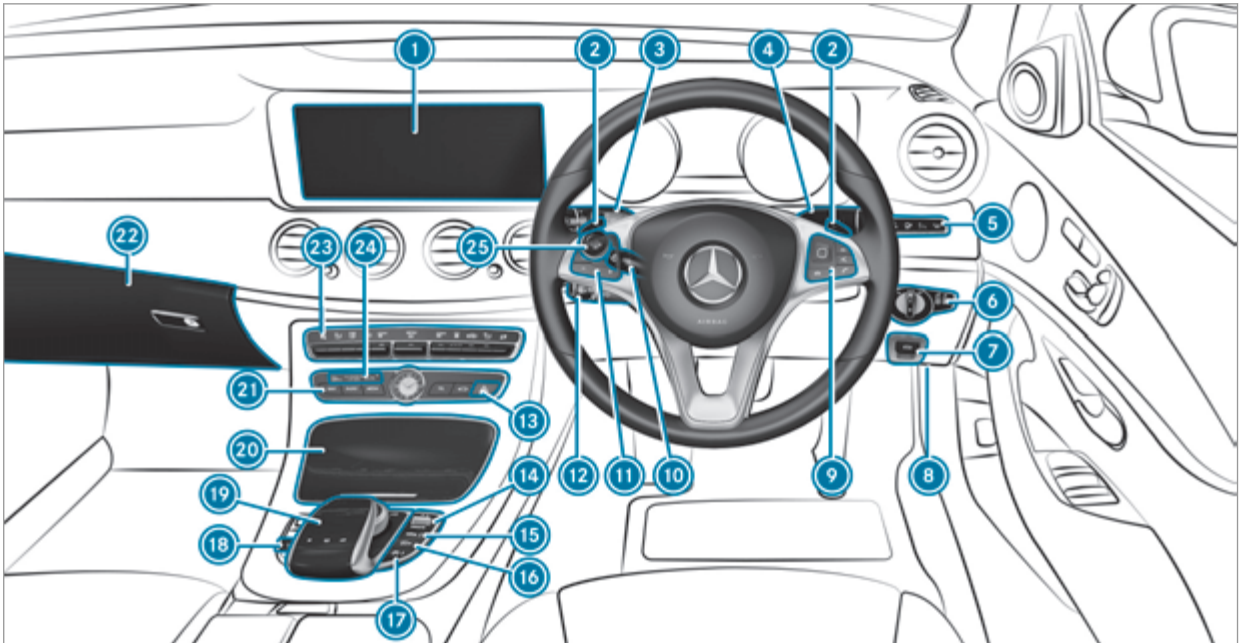

Right-hand drive vehicle

1 Display (multimedia system)	→	255
2 Steering wheel gearshift paddle	→	167
3 Combination switch	→	127
4 DIRECT SELECT lever	→	164
5 Control panel for:		
Steering Pilot	→	204
Active Lane Keeping Assist	→	235
Parking Assist PARKTRONIC	→	212
Head-up display	→	254
6 Light switch	→	125
7 Electric parking brake	→	178
8 To unlock the bonnet	→	304
9 Control panel for multimedia system	→	245
10 To adjust the steering wheel	→	99
11 Control panel for on-board computer	→	245
12 Cruise control lever	→	194
13 Hazard warning lights	→	128
14 DYNAMIC SELECT switch	→	163
15 Setting the vehicle level	→	208
16 Parking Pilot	→	221
17 ECO start/stop function	→	161
18 To lower the rear seat head restraints	→	93
19 Controls for the multimedia system	→	255
20 Stowage compartment	→	103
21 Control panel for multimedia system	→	255
22 Glove box	→	103
23 Climate control systems	→	145
23 PASSENGER AIRBAG indicator lamp	→	, 37
25 Start/Stop button	→	156

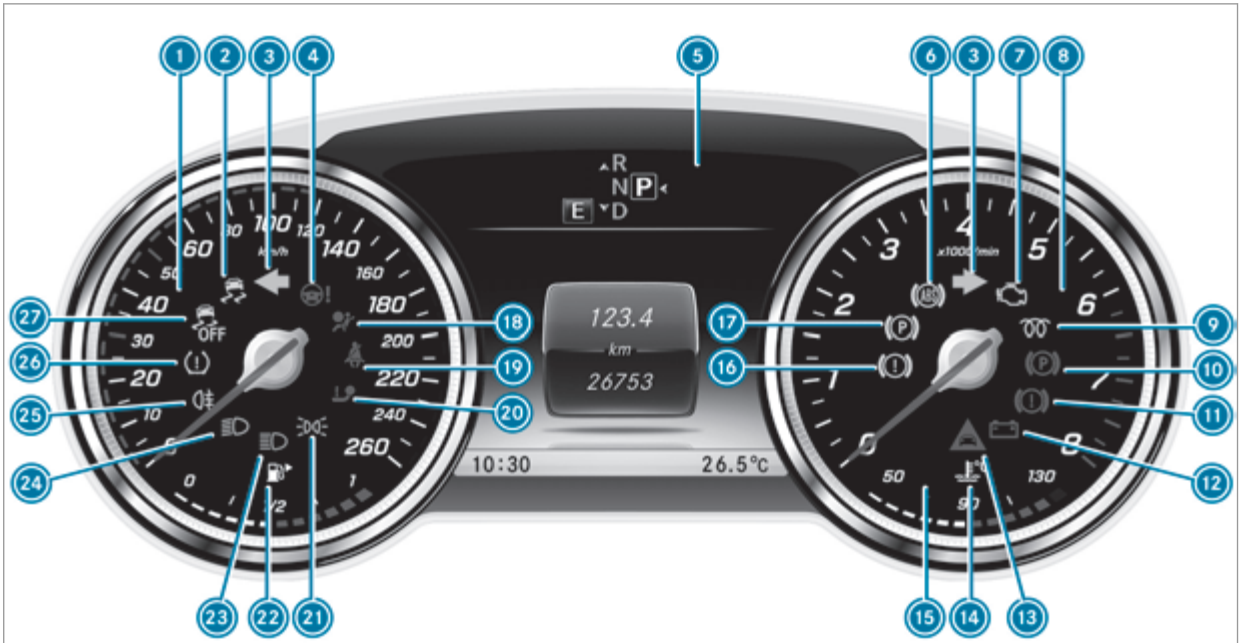

Instrument display

1 Speedometer → 244
2 ESP®
3 Turn signal light → 127
4 Steering assistance malfunction
5 Multifunction display → 246
6 ABS malfunction
7 Engine diagnosis
8 Rev counter → 244
9 Diesel engine: preglow
10 Electric parking brake applied (red)
11 Brakes (red)
12 Electrical fault
13 Distance warning
14 Coolant too hot/cold
15 Coolant temperature display → 244
16 Brakes (yellow)
17 Electric parking brake (yellow)
18 Restraint system → 27
19 Seat belt is not fastened
20 Trailer hitch is not operational or is swivelling
21 Standing lights → 125
22 Fuel level display
Fuel reserve with fuel filler cap location indicator
23 Main beam → 127
24 Dipped beam → 125
25 Rear fog light → 126
26 Tyre pressure monitoring system
27 ESP® OFF

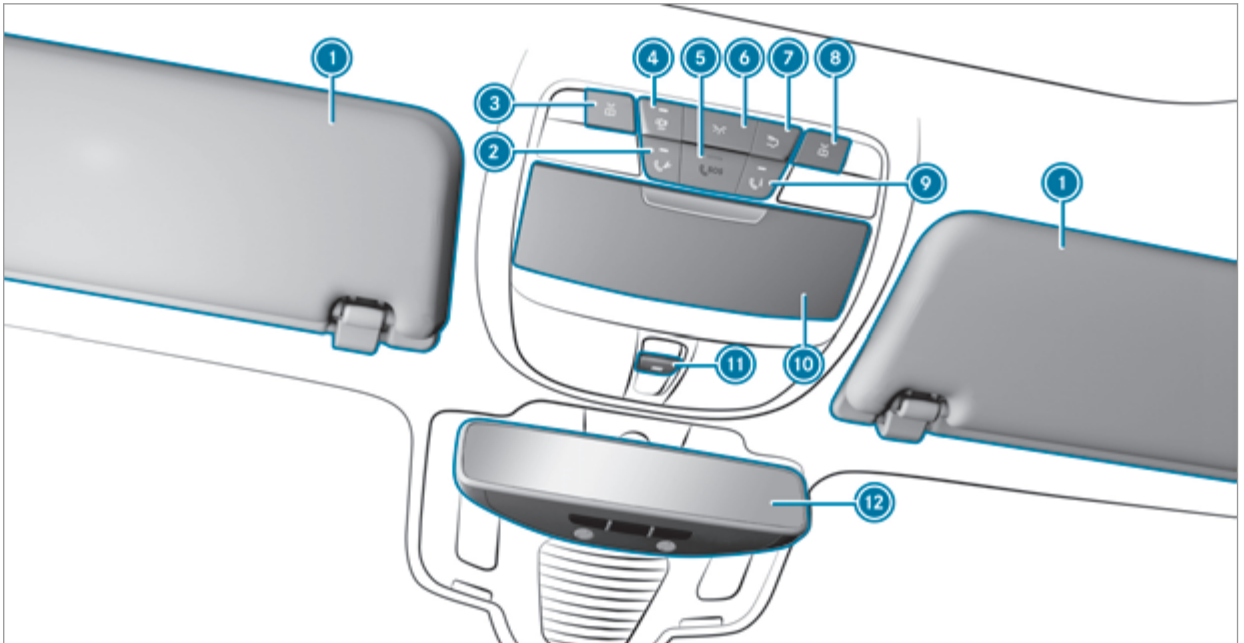
1
4
5
6
7
8
3
2
9
1
11
10
12

1	Sun visors	→	141
2	Breakdown assistance call button (Mercedes me connect)	→	279
3	Switches the left-hand reading lamp on/off	→	132
4	Switches the automatic lighting control on/off	→	132
5	SOS emergency call system (Mercedes-Benz emergency call system)	→	280
6	Switches the front interior lighting on/off	→	132
7	Switches the rear interior lighting on/off	→	132
8	Switches the right-hand reading lamp on/off	→	132
9	MB Info call button (Mercedes me connect)	→	279
10	Spectacles compartment	→	103
11	Opens/closes the panoramic sliding sunroof	→	79
	Opens/closes the roller sunblinds	→	79
12	Inside rearview mirror	→	140

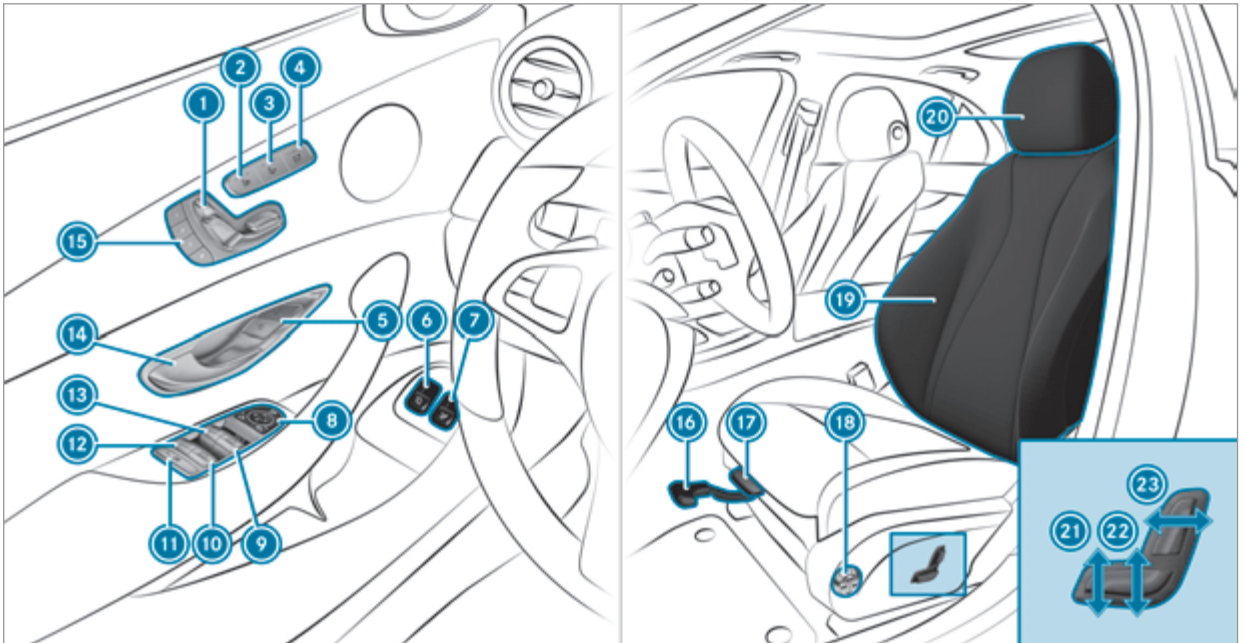
1
2
3
4
5
6
7
8
9
10
11
12
13
14
15
16
17
18
19
20
21
22
23

1	Adjusts the seats electrically	→	90
2	Switches the seat heater on/off	→	93
3	Switches the seat ventilation on/off	→	94
4	Adjusts the front passenger seat from the driver's seat	→	90
5	Locks/unlocks the vehicle	→	65
6	Folds the ball neck of the trailer hitch in or out	→	237
7	Opens/closes the tailgate	→	69
8	Adjusts and folds the outside mirrors out/in electrically	→	139
9	Opens/closes the right side window	→	75
10	Opens/closes the rear right side window	→	75
11	Child safety lock for the rear side windows	→	59
12	Opens/closes the rear left side window	→	75
13	Opens/closes the left side window	→	75
14	Opens the door	→	64
15	Sets the memory function	→	100
16	Adjusts the seat fore-and-aft position	→	89
17	Adjusts the seat cushion length	→	89
18	Adjusts the 4-way lumbar support	→	91
19	Seat adjustment using the multimedia system		
20	Adjusts the head restraints	→	91
21	Adjusts the seat cushion inclination	→	89
22	Adjusts the seat height	→	89
23	Adjusts the seat backrest inclination	→	89

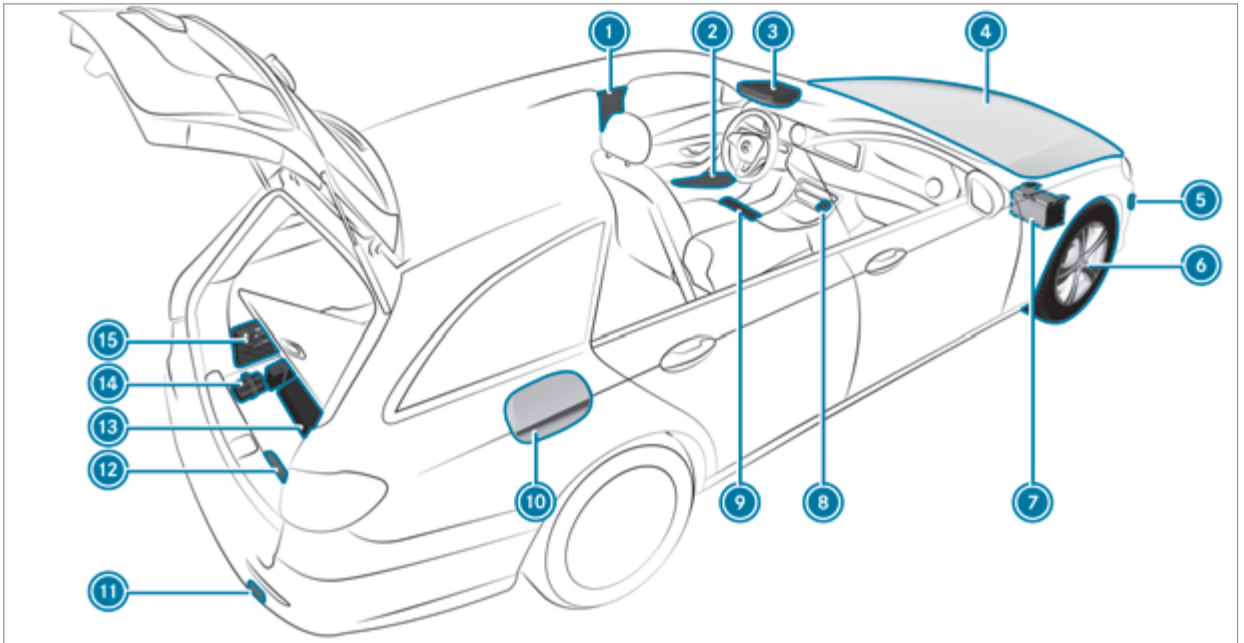
1
2
3
4
5
6
7
8
9
10
11
12
13
14
15

What to do in the event of an accident

1	QR code for accessing the rescue card	→	23
2	Safety vests	→	318
3	Button for the SOS emergency call system and breakdown assistance	→	280
4	Checking and topping up operating fluids	→	363
5	Tow-starting and towing away	→	331
6	Flat tyre	→	320
7	Starting assistance	→	328
8	Hazard warning lights	→	128
9	Fire extinguisher	→	319
10	Fuel filler flap with instruction labels for tyre pressure, fuel type and QR code for accessing the rescue card	→	168
11	Tow-starting and towing away	→	331
12	Warning triangle	→	318
13	Tyre-change tool kit	→	351
14	TIREFIT kit	→	322
15	First-aid kit (soft sided)	→	319

Calling up the Digital Owner's Manual

Multimedia system:

→ Vehicle ▸▸ Owner's Manual

▶ Select a menu item.

The Digital Owner's Manual describes the function and operation of:

- the vehicle
- the multimedia system

For safety reasons, the Digital Owner's Manual is deactivated while driving.

The Digital Owner's Manual contains the following menu items:

- Search: allows you to search precisely for keywords.
- Quick start: provides you with important information so that you can start using your vehicle immediately.
- Tips: provides tips on how to use your vehicle in certain situations.
- Bookmarks: provides you with a list of all the bookmarks you have stored yourself.

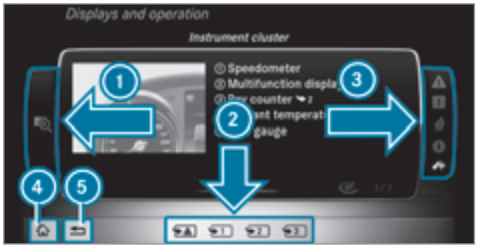

▶ **To scroll forwards/backwards:** turn the controller.

▶ **To display in full screen:** navigate to the left (1).

▶ **To select a note or store a bookmark:** navigate to the right (3).

▶ **To select a link:** navigate down (2).

▶ **To exit a content page:** select the ⮌ symbol (5).

▶ **To call up the basic menu of the Digital Owner's Manual:** select the ⌂ symbol (4).

▶ **To switch functions to the multimedia system using the buttons on the centre console:** press the NAVI, RADIO, MEDIA or TEL button.

The selected menu appears. The Digital Owner's Manual remains open in the background.

ⓘ The Owner's Manual can also be found in the Mercedes-Benz Guides App in all common App Stores.

Protection of the environment

ENVIRONMENTAL NOTE Environmental damage due to operating conditions and personal driving style

The pollutant emission of your vehicle is directly related to the way you operate your vehicle.

You can help to protect the environment by operating your vehicle in an environmentally-responsible manner. Please observe the following recommendations on operating conditions and personal driving style.

Operating conditions:

- Make sure that the tyre pressure is correct.
- Do not carry any unnecessary weight (e.g. roof luggage racks once you no longer need them).
- Adhere to the service intervals. A regularly serviced vehicle will contribute to environmental protection.
- Always have service work carried out at a qualified specialist workshop.

Personal driving style:

- Do not depress the accelerator pedal when starting the engine.
- Do not warm up the engine while the vehicle is stationary.
- Drive carefully and maintain a suitable distance from the vehicle in front.
- Avoid frequent, sudden acceleration and braking.
- Change gear in good time and use each gear only up to ⅔ of its maximum engine speed.
- Switch off the engine in stationary traffic.
- Keep an eye on the vehicle's fuel consumption.

Take-back of end-of-life vehicles

EU countries only:
Mercedes-Benz will take back your end-of-life vehicle for environment-friendly disposal in accordance with the European Union (EU) End-of-Life Vehicles Directive.

A network of vehicle take-back points and dismantlers has been established for you to return your vehicle. You can leave it at any of these points free of charge. This makes an important contribution to closing the recycling circle and conserving resources.

For further information about the recycling and disposal of end-of-life vehicles, and the take-back conditions, please visit the national Mercedes-Benz website for your country.

Mercedes-Benz GenuineParts

ENVIRONMENTAL NOTE Environmental damage caused by the non-use of reconditioned components.

Daimler AG offers recycled reconditioned components and parts with the same quality as new parts. The same entitlement from the implied warranty is valid as for new parts.

- Use recycled reconditioned components and parts from Daimler AG.

NOTE Impairment of the operating efficiency of the restraint systems from installing accessories or from repairs or welding

Airbags and seat belt tensioners, as well as control units and sensors for the restraint systems, may be installed in the following areas of your vehicle:

- Doors
- Door pillars
- Door sills
- Seats
- Cockpit
- Instrument cluster
- Centre console

- Do not install accessories such as audio systems in these areas.
- Do not carry out repairs or welding.
- Have accessories retrofitted at a qualified specialist workshop.

You could jeopardise the operating safety of your vehicle if you use parts, tyres and wheels as well as accessories relevant to safety which have not been approved by Mercedes-Benz. This could lead to malfunctions in safety-relevant systems, e.g. the brake system. Only use Mercedes-Benz GenuineParts or parts of equal quality. Only use tyres, wheels and accessory parts that have been specifically approved for your vehicle model.

Mercedes-Benz tests genuine parts and conversion parts and accessory parts that have been specifically approved for your vehicle model for their reliability, safety and suitability. Despite ongoing market research, Mercedes-Benz is unable to assess other parts. Mercedes-Benz therefore accepts no responsibility for the use of such parts in Mercedes-Benz vehicles, even if they have been officially approved or independently approved by a testing centre.

Certain parts are only officially approved for installation or modification if they comply with legal requirements. All Mercedes-Benz GenuineParts meet the approval requirements. The use of non-approved parts may invalidate the vehicle's general operating permit.

This is the case in the following situations:

- A change of the vehicle type from that for which the vehicle's general operating permit was granted.
- If other road users could be endangered.
- If the exhaust gas or noise levels are adversely affected.

Always specify the vehicle identification number (VIN) (→ page 361) when ordering Mercedes-Benz GenuineParts.

Owner's Manual

This Owner's Manual describes all models and all standard and optional equipment available for your vehicle at the time of this Owner's Manual going to press. Country-specific differences are possible. Note that your vehicle may not be fitted with all features described. This is also the case for systems and functions relevant to safety. Therefore, the equipment on your vehicle may differ from that in the descriptions and illustrations.

The original purchase contract documentation for your vehicle contains a list of all of the systems in your vehicle.

Should you have any questions concerning equipment and operation, please consult a Mercedes-Benz Service Centre.

The Owner's Manual and Service Booklet are important documents and should be kept in the vehicle.

Operating safety

⚠ **WARNING** Risk of accident due to malfunctions or system failures

If you do not have the prescribed service/maintenance work or any required repairs carried out, this could result in malfunctions or system failures.

- Always have the prescribed service/maintenance work as well any required repairs carried out at a qualified specialist workshop.

⚠ **WARNING** Risk of fire due to flammable materials on hot parts of the exhaust system

Flammable material such as leaves, grass or twigs may ignite if they come into contact with hot parts of the exhaust system.

- When driving on unpaved roads or off-road, regularly check the vehicle underside.
- Remove trapped plants or other flammable material, in particular.
- If there is damage, consult a qualified specialist workshop immediately.

⚠ **WARNING** Risk of accident or injury due to incorrect modifications on electronic component parts

Modification to electronic components, their software or wiring could impair their function and/or the function of other networked component parts. In particular, systems relevant to safety could also be affected.

As a result, these may no longer function properly and/or jeopardise the operating safety of the vehicle.

- Never tamper with the wiring and electronic component parts or their software.
- You should have all work on electrical and electronic components carried out at a qualified specialist workshop.

If you modify the on-board electronics, the general operating permit is rendered invalid.

! NOTE Damage to the vehicle

Damage to the vehicle may occur in the following cases:

- The vehicle becomes grounded, e.g. on a high kerb or an unpaved road.
- The vehicle is driven too fast over an obstacle, e.g. a kerb, speed bump or pothole.
- A heavy object strikes the underbody or parts of the chassis.

In situations such as this, the body, the underbody, chassis parts, wheels or tyres could be damaged without the damage being visible. Components damaged in this way can unexpectedly fail or, in the case of an accident, no longer withstand the strain they are designed to.

If the underbody panelling is damaged, flammable materials such as leaves, grass or twigs can gather between the underbody and the underbody panelling. If these materials come into contact with hot parts on the exhaust system, they may catch fire.

▶ Have the vehicle checked and repaired immediately at a qualified specialist workshop.

or

▶ If driving safety is impaired while continuing your journey, pull over and stop the vehicle immediately, paying attention to road and traffic conditions, and contact a qualified specialist workshop.

Declaration of Conformity

Electromagnetic compatibility

The electromagnetic compatibility of the vehicle components has been checked and certified according to the currently valid version of Regulation ECE-R 10.

Wireless vehicle components

The following information applies to all components of the vehicle and the information systems and communication devices integrated into the vehicle which receive and/or transmit radio waves:

The components of this vehicle that receive and/or transmit radio waves are compliant with the basic requirements and all other relevant conditions of Directive 1999/5/EC. You can obtain further information from a Mercedes-Benz Service Centre.

Jack

Copy and translation of the original declaration of conformity:

EC declaration of conformity

1.

The signatory, as a representative

Manufacturer:

BRANO a.s.

74741 Hradec nad Moravicí, Opavská 1000,

Czech Republic

ID No.: 64-387-5933

VAT Reg. No.: CZ64-387-5933

declares, as our sole responsibility, that the product:

2. a)

Description:

Jack

Type, number:

A) A 164 580 02 18, A 166 580 01 18

B) A 240 580 00 18

C) A 639 580 02 18

Manufacture year: 2015

Fulfils all relevant conditions

Directive No. 2006/42/EC

b)

Description and purpose of use:

The jack is only intended for raising the specified vehicle in accordance with the operating instructions affixed to the jack.

3.

Reference data of the harmonised standards or specifications

A) ISO 4063, EN ISO 14341-A, DBL 7382.20, MBN 10435, AS 2693

B) ISO 4063, ISO 14341-A, DBL 7392.10, MBN 10435

C) DBL 7392.10, DBL 8230.10

The technical documentation of the product is stored at the manufacturer's plant. Representative for the compilation of the technical documentation: Director of the Technical Department Brano a.s.

4.

Hradec nad Moravicí

City

5.

05.05.2015

Date

Signed by

Director of Quality

TIREFIT kit

Copy and translation of the original declaration of conformity:

EC declaration of conformity

In accordance with EC directive 2006/42/EC

We hereby declare that the product

Product designation: Daimler electric air pump

Model designation: 0851ve, DT/UW 200046

MB part no.: A 000 583 8200

complies with the following relevant regulations:

2004/108/EC

Applied harmonised standards, in particular:

DIN EN 55014-1

DIN EN 55014-2:2009-06

Manufacturer: Dunlop Tech GmbH

Address: Birkenhainerstrasse 77, 63450 Hanau, Germany

Authorised representative: IMS dept.

Date: June 2015

Signature: IMS-AM, IMS-AE-L

Diagnostics connection

The diagnostics connection is only intended for the connection of diagnostic devices at a qualified specialist workshop.

⚠ WARNING Risk of accident due to connecting devices to the diagnostics connection

If you connect equipment to a diagnostics connection in the vehicle, it may affect the operation of vehicle systems.

As a result, the operating safety of the vehicle could be affected.

- Only connect equipment to a diagnostics connection in the vehicle which is approved for your vehicle by Mercedes-Benz.

⚠ WARNING Risk of accident due to objects in the driver's footwell

Objects in the driver's footwell may impede pedal travel or block a depressed pedal.

This jeopardises the operating and road safety of the vehicle.

- Stow all objects in the vehicle securely so that they cannot get into the driver's footwell.
- Always fit the floor mats securely and as prescribed in order to ensure that there is always sufficient room for the pedals.
- Do not use loose floor mats and do not place floor mats on top of one another.

! NOTE Battery discharging from using devices connected to the diagnostics connection

Using devices at the diagnostics connection drains the battery.

- Check the charge level of the battery.
- If the charge level is low, charge the battery, e.g. by driving a considerable distance.

Connecting equipment to the diagnostics connection can lead to emissions monitoring information being reset, for example. This may lead to the vehicle failing to meet the requirements of the next emissions inspection during the main inspection.

Qualified specialist workshop

A qualified specialist workshop has the necessary special skills, tools and qualifications to correctly carry out any necessary work on your vehicle. This particularly applies to work relevant to safety.

Always have the following work carried out on your vehicle at a qualified specialist workshop:

- Work relevant to safety
- Service and maintenance work
- Repair work
- Modifications, installations and conversions
- Work on electronic component parts

Mercedes-Benz recommends a Mercedes-Benz service centre.

Vehicle registration

Mercedes-Benz may ask its service centres to carry out technical inspections on certain vehicles. The quality or safety of the vehicle is improved as a result of the inspection.

Mercedes-Benz can only inform you about vehicle checks if Mercedes-Benz has your registration data.

It is possible that your vehicle has not yet been registered in your name in the following cases:

- If your vehicle was not purchased at an authorised specialist dealer.
- If your vehicle has not yet been examined at a Mercedes-Benz service centre.

It is advisable to register your vehicle with a Mercedes-Benz service centre.

Inform Mercedes-Benz as soon as possible about any change in address or vehicle ownership. You can do this at a Mercedes-Benz service centre, for example.

Correct use of the vehicle

If you remove any warning stickers, you or others could fail to recognise certain dangers. Leave warning stickers in position.

Observe the following information when driving your vehicle:

- the safety notes in this manual
- the vehicle technical data
- traffic rules and regulations
- laws and safety standards pertaining to motor vehicles

Implied warranty

! **NOTE** Damage to the vehicle arising from culpable violation of these operating instructions.

Damage to the vehicle can arise from culpable violation of these operating instructions.

This damage is not covered either by the Mercedes-Benz implied warranty or by the New or Used-Vehicle Warranty.

▶ Follow the instructions in this manual on proper operation of your vehicle as well as on possible vehicle damage.

QR code for rescue card

The QR code is secured in the fuel filler flap and on the opposite side on the B-pillar. In the event of an accident, rescue services can use the QR code to quickly find the appropriate rescue card for your vehicle. The current rescue card contains the most important information about your vehicle in a compact form, e.g. the routing of the electric lines.

Further information can be obtained at http://www.mercedes-benz.de/qr-code.

Vehicle data storage

Data acquisition

A wide range of electronic components in your vehicle contain data memories.

These data memories temporarily or permanently store technical information about:

- the vehicle's operating state
- events
- faults

In general, the technical information documents the state of a component part, a module, a system or the surroundings.

These include, for example:

- operating conditions of system components, e.g. fluid levels
- the vehicle's status messages and those of its individual components, e.g. number of wheel revolutions/speed, deceleration, lateral acceleration, accelerator pedal position
- malfunctions and defects in important system components, e.g. lights, brakes
- vehicle reactions and operating conditions in special driving situations, e.g. airbag deployment, intervention of stability control systems
- ambient conditions, e.g. outside temperature

This data is of an exclusively technical nature and can be used to:

- assist in detecting and rectifying faults and defects
- analyse vehicle functions, e.g. after an accident
- optimise vehicle functions

The data cannot be used to trace the vehicle's movements.

When your vehicle is serviced, technical information can be read from the event data memory and fault data memory.

Services include, for example:

- repair services
- service processes
- warranty events

The vehicle is read out by employees of the service network (including the manufacturer) using special diagnostic devices. You can obtain more information there, if required.

After a fault has been rectified, the information is deleted from the fault memory or is continually overwritten.

When operating the vehicle, situations are conceivable in which this technical data, in connection with other information (if necessary, after consultation with an authorised expert), could be traced to a person.

Examples include:

- accident reports
- damage to the vehicle
- witness statements

Further additional functions that have been contractually agreed upon with the customer allow certain vehicle data to be conveyed by the vehicle as well. The additional functions include, for example, vehicle location in case of an emergency.

Copyright

Information on free and open source software licences for your vehicle's software can be found

on the data storage medium in your vehicle document wallet and on the Internet together with updates:

http://www.mercedes-benz.com/opensource

Restraint system

Protection by the restraint system

The restraint system includes the following:

- Seat belt system
- Airbags
- Child restraint system
- Child seat securing system

In the event of an accident, the restraint system can:

- Reduce the risk of vehicle occupants coming into contact with parts of the vehicle interior.
- Reduce the forces to which the vehicle occupants are subjected.

A seat belt can only provide the best level of protection if it is worn correctly. Depending on the detected accident situation, seat belt tensioners and/or airbags supplement the protection offered by a correctly worn seat belt. Seat belt tensioners and/or airbags are not deployed in every accident.

In order for the restraint system to provide protection, each vehicle occupant must:

- Have their seat belt fastened correctly.
- Sit in an almost upright seat position with their back against the seat backrest.
- Sit with their feet resting on the floor, if possible.
- Always be secured in an additional restraint system suitable for Mercedes-Benz vehicles if they are under 1.50 m tall.

However, no system available today can completely eliminate injuries and fatalities in every accident situation. In particular, the seat belt and airbag generally do not protect against objects penetrating the vehicle from the outside. It is also not possible to completely rule out the risk of injury caused by the airbag deploying.

Reduced restraint system protection

WARNING Risk of injury or death from modifications to the restraint system

The restraint system can no longer function correctly after alterations have been made.

The restraint system may then not protect the vehicle occupants as intended by failing in an accident or triggering unexpectedly, for example

- ▶ Never alter the parts of the restraint system.
- ▶ Never tamper with the wiring or any electronic component parts or their software.

If it is necessary to modify the vehicle to accommodate a person with disabilities, contact a qualified specialist workshop.

Mercedes-Benz recommends that you only use seat belts which have been approved specifically for your vehicle by Mercedes-Benz.

Restraint system functionality

When the ignition is switched on, a system self-test is performed, during which the restraint system warning lamp lights up. It goes out no later than a few seconds after the vehicle is started. The components of the restraint system are then functional.

Restraint system malfunction

- The restraint system warning lamp does not light up when the ignition is switched on.
- The restraint system warning lamp lights up continuously or repeatedly during a journey.

⚠ **WARNING** Risk of injury or fatal injury due to a malfunction in the restraint system

If the restraint system is malfunctioning, restraint system components may be triggered unintentionally or might not be triggered at all in the event of an accident. This may affect the seat belt tensioner or airbag, for example.

▶ Have the restraint system checked and repaired immediately at a qualified specialist workshop.

Function of the restraint system in an accident

How the restraint system works is determined by the severity of the impact detected and the type of accident anticipated:

- Frontal impact
- Rear impact
- Side impact
- Rollover

The activation thresholds for the components of the restraint system are determined based on the evaluation of the sensor values measured at various points in the vehicle. This process is preemptive in nature. The triggering/deployment of the components of the restraint system should take place in good time at the start of the collision.

Factors which can only be seen and measured after a collision has occurred cannot play a decisive role in airbag deployment, nor do they provide an indication of airbag deployment.

The vehicle may be deformed significantly without an airbag being deployed. This is the case if only parts which are relatively easily deformed are affected and the rate of vehicle deceleration is not high. Conversely, an airbag may be deployed even though the vehicle suffers only minor deformation. If very rigid vehicle parts such as longitudinal members are hit, for example, this may result in sufficiently high levels of vehicle deceleration.

The components of the restraint system can be activated or deployed independently of each other:

Component	Detected deployment situation
Seat belt tensioners	Frontal impact, rear impact, side impact, rollover
Driver's airbag, front passenger airbag	Frontal impact
Knee airbag	Frontal impact
Side impact airbag	Side impact
Window airbag	Side impact, rollover, frontal impact
PRE-SAFE® Impulse Side	Side impact

The front passenger airbag can only be deployed in an accident if the PASSENGER AIR BAG OFF indicator lamp is off. If the front passenger seat is occupied, make sure, both before and during the journey, that the status of the front passenger airbag is correct (→ page 37).

⚠ WARNING Rick of burns from hot airbag components

The airbag parts are hot after an airbag has been deployed.

- ▶ Do not touch the airbag parts.
- ▶ Have a deployed airbag replaced at a qualified specialist workshop as soon as possible.

Mercedes-Benz recommends that you have the vehicle towed to a qualified specialist workshop after an accident. Take this into account, particularly if a seat belt tensioner was triggered or an airbag was deployed.

If the seat belt tensioners are triggered or an airbag is deployed, you will hear a bang, and a small amount of powder may also be released:

- The bang will not generally affect your hearing.
- In general, the powder released is not hazardous to health but may cause short-term breathing difficulties to persons suffering from asthma or other pulmonary conditions.

  Provided it is safe to do so, leave the vehicle immediately or open the window in order to prevent breathing difficulties.

Seat belts

Protection provided by the seat belt

Always fasten your seat belt correctly before starting a journey. A seat belt can only provide the best level of protection if it is worn correctly.

⚠ WARNING Risk of injury or death due to incorrectly fastened seat belt

If the seat belt is not worn correctly, it cannot perform its intended protective function.

In addition, an incorrectly fastened seat belt can also cause injuries, for example, in the event of an accident or when braking or changing direction suddenly.

▶ Always ensure that all vehicle occupants have their seat belts fastened correctly and are sitting properly.

- The seat belt must:
  - Not be twisted and must fit tightly and snugly across your body.
  - Be routed across the centre of your shoulder and as low down across your hips as possible.
- The shoulder section of the seat belt should not touch your neck nor be routed under your arm or behind your back.
- Avoid wearing bulky clothing, e.g. a winter coat.
- Push the lap belt down as far as possible across your hips and pull tight with the shoulder section of the belt. Never route the lap belt across your abdomen.
- Never route the seat belt across sharp, pointed, abrasive or fragile objects.
- Only one person should use each seat belt at any one time. Never allow babies and children to travel sitting on the lap of another vehicle occupant.
- Never secure objects with a seat belt if the seat belt is also being used by one of the vehicle's occupants. Always observe the instructions for loading the vehicle when securing objects, luggage or loads (→ page 101).

If children are travelling in the vehicle, be sure to observe the instructions and safety notes on "Children in the vehicle" (→ page 41).

Reduced protection

⚠ **WARNING** Risk of injury or death due to incorrect seat position

The seat belt does not offer the intended level of protection if you have not moved the seat backrest to an almost vertical position.

When braking or in the event of an accident, you could slide underneath the seat belt and sustain abdominal or neck injuries, for example.

▶ Adjust the seat properly before beginning your journey.

▶ Always ensure that the seat backrest is in an almost vertical position and that the shoulder section of your seat belt is routed across the centre of your shoulder.

⚠ **WARNING** Risk of injury or death when additional restraint systems are not used for persons with a smaller build

Persons under 1.50 m tall cannot wear the seat belt correctly without a suitable additional restraint system.

If the seat belt is not worn correctly, it cannot perform its intended protective function. In addition, an incorrectly fastened seat belt can also cause injuries, for example, in the event of an accident or when braking or changing direction suddenly.

▶ Always secure persons under 1.50 m tall in a suitable restraint system.

⚠ WARNING Risk of injury or death due to blocked seat belt buckle or seat belt anchorage

Objects next to the front seat that block the seat belt buckle or the moving seat belt anchorage on the front seat impair the function of the seat belt tensioners.

The seat belt tensioners may not function as intended and the seat belt may no longer provide the intended protection.

- ▶ Before starting the journey, make sure that there are no objects around the seat belt buckle or between the front seat and door.

⚠ WARNING Risk of injury or death due to damaged or modified seat belts

Seat belts cannot provide protection in the following situations:

- If the seat belts are damaged, modified, extremely dirty, bleached or dyed
- If the seat belt buckle is damaged or extremely dirty
- If the seat belt tensioners, seat belt anchorages or seat belt retractors have been modified

Seat belts may be damaged in an accident, although the damage may not be visible, e.g. due to splinters of glass.

Modified or damaged seat belts may tear or fail, e.g. in an accident.

Modified seat belt tensioners could accidentally trigger or fail to function as intended.

- ▶ Never modify the seat belts, seat belt tensioners, seat belt anchorages or seat belt retractors.
- ▶ Make sure that the seat belts are undamaged, not worn and clean.
- ▶ Always have the seat belts checked immediately after an accident at a qualified specialist workshop.

Mercedes-Benz recommends that you only use seat belts which have been approved specifically for your vehicle by Mercedes-Benz.

⚠ WARNING Risk of injury or death from deployed pyrotechnic seat belt tensioners

Pyrotechnic seat belt tensioners that have been deployed are no longer operational and are unable to perform their intended protective function.

- ▶ Therefore, have deployed pyrotechnic seat belt tensioners immediately replaced at a qualified specialist workshop.

Mercedes-Benz recommends that you have the vehicle towed to a qualified specialist workshop after an accident.

! **NOTE** Damage caused by trapping the seat belt

If an unused seat belt is not fully retracted, it may become trapped in the door or in the seat mechanism.

- Always ensure that an unused seat belt is fully retracted.

Fastening and adjusting seat belts

If the seat belt is pulled quickly or sharply, the seat belt retractor locks. The seat belt strap cannot be pulled out any further.

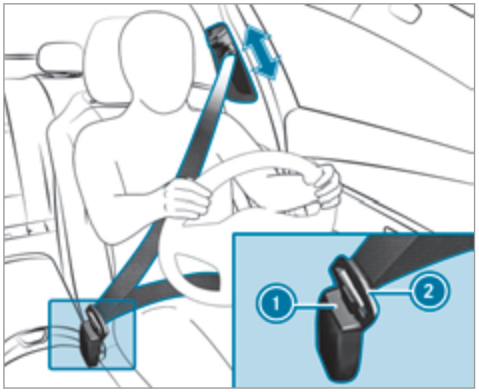

- Always engage seat belt tongue (2) of the seat belt into seat belt buckle (1) of the corresponding seat.
- Press and hold the seat belt outlet release and slide the seat belt outlet into the desired position.
- Let go of the belt outlet release and ensure that the seat belt outlet locks in position.

Vehicles with PRE-SAFE®: If the front seat belt is not pulled tight across your body, the seat belt adjustment may automatically apply a certain tightening force. Do not hold the seat belt tightly while it is adjusting. You can activate and deactivate the seat belt adjustment function using the multimedia system.

! **NOTE** Deployment of the seat belt tensioner when the front passenger seat is unoccupied

If the seat belt tongue is engaged in the seat belt buckle of the front passenger seat and the front passenger seat is unoccupied, the seat belt tensioner may deploy in the event of an accident.

- Only one person should use each seat belt at any one time.

Releasing the seat belts

- Press the release button in the seat belt buckle and guide the seat belt back with the seat belt tongue.

Activating or deactivating seat belt adjustment via the multimedia system

Multimedia system:

→ Vehicle ▸▸ Vehicle settings ▸▸ Belt adjustment

▶ Activate or deactivate the function.

Seat belt warning for the driver and front passenger

The seat belt warning lamp in the Instrument Display is a reminder that all vehicle occupants must wear their seat belts correctly.

In addition, an acoustic warning tone may sound.

As soon as the driver and front passenger fasten their seat belts, the seat belt warning goes out.

Rear seat belt status display

The rear seat belt status display is only available for certain countries.



The rear seat belt status display informs you which rear seat belt is not fastened.

You can immediately dismiss the rear seat belt status display using the back button on the left-hand side of the steering wheel (→ page 245).

Airbags

Overview of airbags

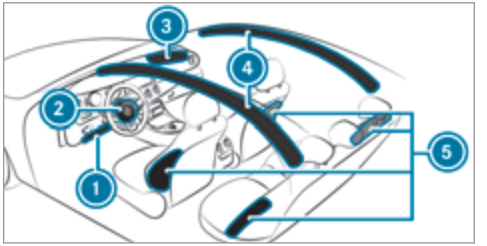

1. Knee airbag
2. Driver's airbag
3. Front passenger airbag
4. Window airbag
5. Side impact airbag

The installation location of an airbag is identified by the AIRBAG symbol.

When activated, an airbag can provide additional protection for the respective vehicle occupant.

AIRBAG	Potential protection for ...
Knee airbag	Thigh, knee and lower leg
Driver's airbag, front passenger airbag	Head and ribcage
Window airbag	Head
Side impact airbag	Ribcage, also pelvis for front seat occupants

The front passenger airbag can only be deployed in an accident if the PASSENGER AIR BAG OFF indicator lamp is off. If the front passenger seat is occupied, make sure, both before and during the journey, that the status of the front passenger airbag is correct (→ page 37).

NOTE Important points to remember if the front passenger seat is unoccupied

In an accident, the components of the restraint system may deploy unnecessarily on the front passenger side if:

- There are heavy objects on the front passenger seat.
- The seat belt tongue is engaged in the seat belt buckle of the front passenger seat and the front passenger seat is unoccupied.

▶ Stow objects in a suitable place.

▶ Only one person should use each seat belt at any one time.

Protection by the airbags

Depending on the accident situation, an airbag may supplement the protection offered by a correctly fastened seat belt.

WARNING Risk of injury or death due to incorrect seat position

If you deviate from the correct seat position, the airbag cannot perform its intended protective function and deployment may even cause further injuries.

To avoid hazardous situations, always make sure that all vehicle occupants:

- Have their seat belt fastened correctly, including pregnant women.
- Are seated properly and keep as far away as possible from the airbags.
- Observe the following information.

▶ Always make sure that there are no objects between the airbag and vehicle occupant.

To avoid risks resulting from the deployment of the airbag:

- Before starting your journey, adjust your seat correctly; the driver's seat and front passenger seat should be moved as far back as possible.

When doing so, always observe the information on the correct driver's seat position (→ page 86).

- Only hold the steering wheel by the steering wheel rim. This allows the airbag to be fully deployed.
- Always lean against the seat backrest when the vehicle is in motion. Do not lean forwards or against the door or side window. You may otherwise be in the deployment area of the airbags.
- Always keep your feet on the floor. Do not put your feet on the cockpit, for example. Your feet may otherwise be in the deployment area of the airbag.
- If children are travelling in the vehicle, observe the additional notes (→ page 41).
- Always stow and secure objects correctly.

Objects in the vehicle interior may prevent an airbag from functioning correctly. Therefore always ensure that:

- There are no people, animals or objects between the vehicle occupants and an airbag.
- There are no objects between the seat, door and door pillar (B-pillar).
- There are no hard objects, e.g. coat hangers, hanging on the grab handles or coat hooks.
- There are no accessories, such as cup holders, attached to the vehicle within the deployment area of an airbag, e.g. on doors, side windows or side panelling.
- There are no heavy, sharp-edged or fragile objects in the pockets of your clothing. Store such objects in a suitable place.

Reduced airbag protection

WARNING Risk of injury from modifications to the airbag cover

If you modify an airbag cover or affix objects such as stickers to it, the airbag can no longer function correctly.

▶ Never modify an airbag cover and do not affix objects to it.

The installation location of an airbag is identified by the AIRBAG symbol (→ page 32).

WARNING Risk of injury or death due to the use of unsuitable seat covers

Unsuitable seat covers can obstruct or prevent the deployment of the airbags integrated into the seats.

Consequently, the airbags cannot protect vehicle occupants as they are designed to do. In addition, the operation of the automatic front passenger airbag shutoff could be restricted.

▶ You should only use seat covers that have been approved for the corresponding seats by Mercedes-Benz.

⚠ WARNING Risk of injury due to malfunctions of the sensors in the door panelling

Sensors to control the airbags are located in the doors. Modifications or work not performed correctly to the doors or door panelling, as well as damaged doors, can lead to the function of the sensors being impaired. The airbags might therefore not function properly any more.

Consequently, the airbags cannot protect vehicle occupants as they are designed to do.

▶ Never modify the doors or parts of the doors.

▶ Always have work on the doors or door panelling carried out at a qualified specialist workshop.

⚠ WARNING Risk of injury due to deployed airbag

A deployed airbag no longer offers any protection and cannot provide the intended protective function in the event of an accident.

▶ Have the vehicle towed to a qualified specialist workshop in order to have the deployed airbag replaced.

Have deployed airbags replaced immediately.

Status of the front passenger airbags

Points to remember when the front passenger seat is occupied

The automatic front passenger airbag shutoff is able to detect whether the front passenger seat is occupied by a person or a child restraint system. The front passenger airbag is enabled or disabled accordingly.

When installing a child restraint system on the front passenger seat:

- Ensure that the child restraint system is positioned correctly (→ page 48).
- Always observe the child restraint system manufacturer's installation instructions.
- Never place objects under or behind the child restraint system, e.g. cushions.
- Fully retract the seat cushion length adjustment.
- The entire base of the child restraint system must always rest on the sitting surface of the front passenger seat.
- The backrest of the forward-facing child restraint system must, as far as possible, be resting on the seat backrest of the front passenger seat.
- The child restraint system must not touch the roof or be put under strain by the head restraints. Adjust the seat backrest inclination and the head restraint setting accordingly.

WARNING Risk of injury or death due to objects between the sitting surface and the child restraint system

Objects between the sitting surface and the child restraint system could affect the function of the automatic front passenger airbag shutoff.

This could result in the front passenger airbag not functioning as intended during an accident.

- Do not place any objects between the sitting surface and the child restraint system.
- The entire base of the child restraint system must always rest on the sitting surface of the front passenger seat.
- The backrest of the forward-facing child restraint system must, as far as possible, be resting on the seat backrest of the front passenger seat.
- Always comply with the child restraint system manufacturer's installation instructions.

A person in the front passenger seat must:

- Have their seat belt fastened correctly.
- Sit in an almost upright seat position with their back against the seat backrest.
- Sit with their feet resting on the floor, if possible.

Otherwise, the front passenger airbag may be deactivated by mistake, for example because the front passenger:

- Transfers their weight by supporting themselves on a vehicle armrest.
- Sits in such a way that their weight is raised from the sitting surface.

WARNING Risk of injury or death due to deactivated front passenger airbag

If the PASSENGER AIRBAG OFF indicator lamp is lit, the front passenger airbag is disabled. It will not be deployed in the event of an accident and cannot perform its intended protective function.

A person in the front passenger seat could then, for example, come into contact with the vehicle interior, especially if the person is sitting too close to the cockpit.

If the front passenger seat is occupied, always ensure that:

- The classification of the person in the front passenger seat is correct and the front passenger airbag is enabled or disabled in accordance with the person in the front passenger seat.
- The front passenger seat has been moved as far back as possible.
- The person is seated correctly.

- Ensure, both before and during the journey, that the status of the front passenger airbag is correct.

PASSENGER AIR BAG indicator lamp

System self-test

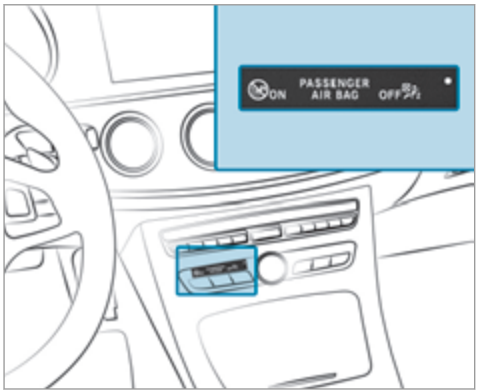

When the ignition is switched on, a system self-test is performed during which the two PASSENGER AIR BAG ON and OFF indicator lamps light up simultaneously.

The status of the front passenger airbag is then displayed:

- PASSENGER AIR BAG ON lights up for 60 seconds, subsequently both indicator lamps are off (PASSENGER AIR BAG ON and OFF): the front passenger airbag is able to deploy in the event of an accident.
- PASSENGER AIR BAG OFF lights up continuously: the front passenger airbag is disabled. It will then not be deployed in the event of an accident.

If the PASSENGER AIR BAG ON indicator lamp is off, only the PASSENGER AIR BAG OFF indicator lamp shows the status of the front passenger airbag. The PASSENGER AIR BAG OFF indicator lamp may be lit continuously or be off.

If the PASSENGER AIR BAG OFF indicator lamp and the restraint system warning lamp light up simultaneously, the front passenger seat may not be used. Also in this case, do not install a child restraint system on the front passenger seat. Have the automatic front passenger airbag shutoff checked and repaired immediately at a qualified specialist workshop.

Status display

If the front passenger seat is occupied, ensure, both before and during the journey, that the status of the front passenger airbag is correct for the prevailing situation.

After installing a rearward-facing child restraint system on the front passenger seat: PASSENGER AIR BAG OFF must be lit continuously.

⚠ **WARNING** Risk of injury or death caused by using a rearward-facing child restraint system when the front passenger airbag is enabled

If you secure a child in a rearward-facing child restraint system on the front passenger seat and the PASSENGER AIR BAG OFF indicator lamp is off, the front passenger airbag can deploy in the event of an accident.

The child could be struck by the airbag.

Always make sure that the front passenger airbag is disabled. The PASSENGER AIR BAG OFF indicator lamp must be lit.

When installing a child restraint system on the front passenger seat, observe the vehicle-specific information (→ page 35).

Depending on the child restraint system and the stature of the child, the PASSENGER AIR BAG OFF indicator lamp may be off. In this case, do not install the rearward-facing child restraint system on the front passenger seat.

Instead, install the rearward-facing child restraint system on a suitable rear seat.

After installing a forward-facing child restraint system on the front passenger seat: depending on the child restraint system and the stature of the child, PASSENGER AIR BAG OFF may be lit continuously or be off. Always observe the following information.

⚠ **WARNING** Risk of injury or death due to incorrect positioning of the forward-facing child restraint system

If you secure a child in a forward-facing child restraint system on the front passenger seat and you position the front passenger seat too close to the cockpit, in the event of an accident, the child could:

- Come into contact with the vehicle interior if the PASSENGER AIR BAG OFF indicator lamp is lit, for example.
- Be struck by the airbag if the PASSENGER AIR BAG OFF indicator lamp is off.

▶ Always move the front passenger seat as far back as possible and fully retract the seat cushion length adjustment. Always make sure that the shoulder belt strap is correctly routed from the seat belt outlet on the vehicle to the shoulder belt guide on the child restraint system. The shoulder belt strap must be routed forwards and downwards from the seat belt outlet. If necessary, adjust the seat belt outlet and the front passenger seat accordingly.

▶ Always observe the child restraint system manufacturer's installation instructions.

When installing a child restraint system on the front passenger seat, observe the vehicle-specific information (→ page 35).

If a person is sitting in the front passenger seat: PASSENGER AIR BAG OFF may be lit continuously or be off, depending on the person's stature. Always observe the following information.

If the front passenger seat is occupied by:

- An adult or a person with a build corresponding to that of an adult, the PASSENGER AIR BAG OFF indicator lamp must be off. This indicates that the front passenger airbag is enabled.

  If the PASSENGER AIR BAG OFF indicator lamp is lit continuously, an adult or person with a build corresponding to that of an adult

should not use the front passenger seat. Instead, they should use a rear seat.

- A person with a smaller build (e.g. a teenager or small adult), the PASSENGER AIR BAG OFF indicator lamp either lights up and remains lit depending on the result of the classification or, alternatively, goes out.
  - PASSENGER AIRBAG OFF is off: move the front passenger seat as far back as possible or a person with a smaller build should use a rear seat.
  - If the PASSENGER AIRBAG OFF indicator lamp is lit continuously: a person with a smaller build should not use the front passenger seat.

⚠ **WARNING** Risk of injury or death when the PASSENGER AIR BAG OFF indicator lamp is lit

If the PASSENGER AIR BAG OFF indicator lamp remains lit after the system self-test, the front passenger airbag is disabled. It will not be deployed in the event of an accident. In this case, the front passenger airbag cannot perform its intended protective function, e.g. when a person is seated in the front passenger seat.

That person could, for example, come into contact with the vehicle interior, especially if the person is sitting too close to the cockpit.

If the front passenger seat is occupied, always ensure that:

- The classification of the person in the front passenger seat is correct and the front passenger airbag is enabled or disabled in accordance with the person in the front passenger seat.
- The person is seated properly with a correctly fastened seat belt.
- The front passenger seat has been moved as far back as possible.

Further related subjects:

- Child restraint system on the front passenger seat (→ page 46).
- Suitable positioning of the child restraint system (→ page 48).

PRE-SAFE® system

Information on PRE-SAFE® (anticipatory occupant protection)

PRE-SAFE® is able to detect certain critical driving situations and implement pre-emptive measures to protect the vehicle occupants.

PRE-SAFE® can implement the following measures independently of each other:

- Tightening the seat belts on the driver's seat and front passenger seat.
- Closing the side windows.
- **Vehicles with sliding sunroof:** Close the sliding sunroof.
- **Vehicles with memory function:** Moving the front passenger seat to a more favourable seat position.
- **Vehicles with multicontour seat:** Increasing the air pressure in the seat side bolsters of the seat backrest.
- PRE-SAFE® Sound: Provided that the multimedia system is switched on, generates a

brief noise signal to stimulate the innate protective mechanism of a person's hearing.

! **NOTE** Damage caused by objects in the footwell or behind the seat

The automatic adjustment of the seat position may result in damage to the seat and/or the object.

▶ Stow objects in a suitable place.

Reversing the PRE-SAFE® measures

If an accident did not occur, the pre-emptive measures that were taken are reversed. You will need to perform certain settings yourself.

▶ If the seat belt pre-tensioning is not reduced, move the seat backrest back slightly.
The locking mechanism releases.

Information on PRE-SAFE® PLUS (anticipatory occupant protection plus)

PRE-SAFE® PLUS can detect certain impacts, particularly an imminent rear impact, and take pre-emptive measures to protect the vehicle occupants. These measures cannot necessarily prevent an imminent impact.

PRE-SAFE® PLUS can implement the following measures independently of each other:

- Tightening the seat belts on the driver's seat and front passenger seat.

  If an accident does not occur, the pre-emptive measures that were taken are reversed .
- Activating the rear hazard warning lights at a higher flashing frequency.
- Increasing brake pressure when the vehicle is stationary. This brake application is cancelled automatically when the vehicle pulls away.

PRE-SAFE® PLUS system limitations

- No measures are implemented:
  - If the vehicle is reversing.

    or
  - When the vehicle is towing a trailer and there is a risk of a rear impact.
- The brakes are not applied:
  - Whilst driving.

    or
  - When entering or exiting a parking space using Parking Pilot.

Information on PRE-SAFE® Impulse Side

If an imminent side impact is detected, PRE-SAFE® Impulse Side can pre-emptively move the front-seat vehicle occupant's upper body towards the centre of the vehicle. It does this by rapidly inflating an air cushion in the outer seat side bolster of the seat backrest on the side on which the impact is anticipated. This increases the distance between the door and the vehicle occupant.

If PRE-SAFE® Impulse Side has been deployed or is faulty, the display message PRE-SAFE impulse

side inoperative See Owner's Manual is displayed (→ page 376).

Children in the vehicle

Notes on the safe transportation of children

WARNING Risk of accident and injury due to children left unattended in the vehicle

If you leave children unattended in the vehicle, they may be able to set the vehicle in motion, for example by:

- Releasing the parking brake.
- Shifting the automatic transmission out of park position P or shifting the manual transmission into neutral.
- Starting the engine.

In addition, they may operate vehicle equipment.

▶ Never leave children and animals unattended in the vehicle.

▶ When leaving the vehicle, always take the key with you and lock the vehicle. This also applies to mobile phones if the "Digital Car Key in the smartphone" function is activated via the Mercedes connect me web app.

WARNING This poses an increased risk of death due to heat stroke or exposure to cold in the vehicle

If persons – particularly children – - experience prolonged exposure to extremely high or low temperatures, this poses a risk of injury or even fatal injury.

▶ Never leave anyone – particularly children – unattended in the vehicle.

WARNING Risk of burns when the child seat is exposed to direct sunlight

If the child restraint system is exposed to direct sunlight or heat, parts could heat up. Children could suffer burns on these parts, particularly on metallic parts of the child restraint system.

▶ Always make sure that the child restraint system is not exposed to direct sunlight.

▶ Protect it with a blanket, for example.

▶ If the child restraint system has been exposed to direct sunlight, allow it to cool before securing a child into it.

▶ Never leave children unattended in the vehicle.

To improve protection for children younger than 12 years old and under 1.50 m in height, Mercedes-Benz recommends you observe the following notes:

- Only secure children using a child restraint system which is suitable and recommended for Mercedes-Benz vehicles, as well as appropriate to the height, age and weight of the child. Be sure to observe the instructions for correct use of the child restraint system.

- Always install a child restraint system on a rear seat if possible.
- Only use the following securing systems for child restraint systems:
  - the seat belt system
  - the ISOFIX or i-Size mounting bracket
  - the Top Tether anchorages
- The manufacturer's installation instructions for the child restraint system.
- The warning labels in the vehicle interior and on the child restraint system.

⚠ WARNING Risk of injury or death caused by incorrect installation of the child restraint system

If the child restraint system is incorrectly installed on a suitable seating position, it cannot perform its intended protective function.

The child cannot be restrained in the event of an accident, heavy braking or a sudden change of direction.

- ▶ Always comply with the manufacturer's installation instructions for the child restraint system and its correct use.
- ▶ Make sure that the entire base of the child restraint system always rests on the sitting surface of the seat.
- ▶ Never place objects under or behind the child restraint system, e.g. cushions.
- ▶ Always use child restraint systems with the original cover designed for them.
- ▶ Always replace damaged covers with genuine covers.

⚠ WARNING Risk of accident caused by incorrectly installed child restraint systems

If the child restraint system is not correctly installed or secured, it could release in the event of an accident, sudden braking or a sudden change in direction.

The child restraint system could be flung around and hit vehicle occupants. This poses an increased risk of injury or even death!

- ▶ Always install child restraint systems correctly, even when not in use.
- ▶ Always comply with the child restraint system manufacturer's installation instructions.

⚠ WARNING Risk of injury or death caused by the use of damaged child restraint systems

Child restraint systems or their retaining systems that have been subjected to a load in an accident may then not be able to perform their intended protective function.

The child cannot be restrained in the event of an accident, heavy braking or a sudden change of direction.

- ▶ Always replace child restraint systems immediately that have been damaged or involved in an accident.

▶ Have the securing systems for the child restraint systems checked at a qualified specialist workshop before installing a child restraint system again.

ⓘ Use Mercedes-Benz care products recommended by Mercedes-Benz to clean child restraint systems. Further information can be obtained at a qualified specialist workshop.

The following notes must be observed:

- When installing a child restraint system on the front passenger seat, the information on installing a child restraint system on the front passenger seat (→ page 46).
- Notes on attaching suitable child restraint systems (→ page 48).
- Notes on recommended child restraint systems (→ page 55).
- Instructions and safety notes on the automatic front passenger airbag shutoff (→ page 35).
- Safety notes on the seat belt (→ page 28).
- Information on the correct use of the seat belt (→ page 31).

ISOFIX and i-Size child seat securing systems

Information on the ISOFIX and i-Size child seat securing systems

⚠ **WARNING** Risk of injury or fatal injury if the child secured weighs more than the permissible weight for the ISOFIX or i-Size child restraint system

ISOFIX child restraint systems or i-Size child restraint systems do not offer sufficient protection for children weighing more than 22 kg, who are secured using the seat belt integrated in the child restraint system.

For example. the child may not be restrained correctly in the event of an accident.

▶ If the child weighs more than 22 kg, only use ISOFIX or i-Size child restraint systems with which the child is secured with the vehicle seat belt.

▶ Also secure the child restraint system with the Top Tether belt, if available.

When fitting a child restraint system, be sure to observe the manufacturer's installation instructions and the instructions for correct use of the child restraint system.

ISOFIX and i-Size are standardised securing systems for special restraint systems. ISOFIX child restraint systems are approved in accordance with ECE R44, i-Size child restraint systems are approved in accordance with ECE R129.

Only child restraint systems that have been approved in accordance with ECE R44 may be attached to ISOFIX mounting brackets. ISOFIX child restraint systems which have been approved in accordance with ECE R-44 and i-Size child restraint systems which have been approved in accordance with ECE-R129, can be attached to i-Size mounting brackets.

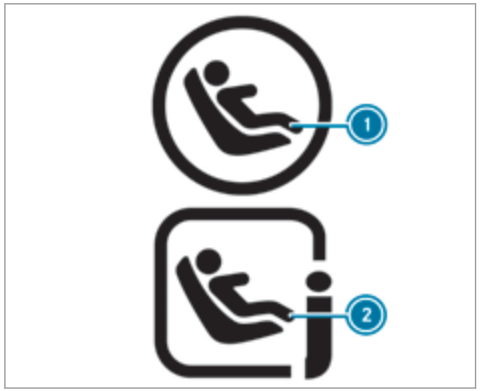

1 Symbol for fitting an ISOFIX child restraint system
2 Symbol for fitting an i-Size child restraint system

Fitting ISOFIX and i-Size child seat securing systems

⚠ **WARNING** Risk of injury or fatal injury if the child secured weighs more than the permissible weight for the ISOFIX or i-Size child restraint system

ISOFIX child restraint systems or i-Size child restraint systems do not offer sufficient protection for children weighing more than 22 kg, who are secured using the seat belt integrated in the child restraint system.

For example. the child may not be restrained correctly in the event of an accident.

- ▶ If the child weighs more than 22 kg, only use ISOFIX or i-Size child restraint systems with which the child is secured with the vehicle seat belt.
- ▶ Also secure the child restraint system with the Top Tether belt, if available.

When fitting a child restraint system, be sure to observe the manufacturer's installation instructions and the instructions for correct use of the child restraint system.

Before every trip, make sure that the ISOFIX child restraint system or the i-Size child restraint system is engaged correctly in both ISOFIX or i-Size mounting brackets.

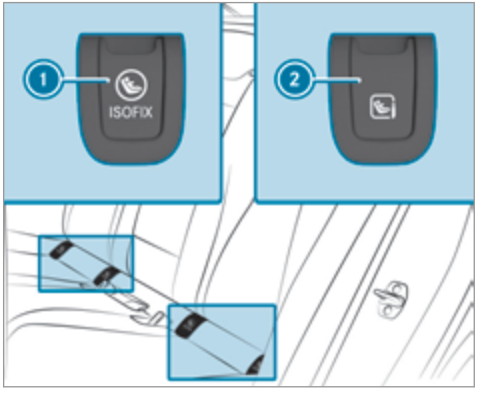

1 ISOFIX mounting brackets
2 i-Size mounting brackets

NOTE Damage to the seat belt for the centre seat

When fitting a child restraint system, the seat belt for the centre seat could be damaged.

- Make sure that the seat belt is not trapped.

- Remove each cover for ISOFIX mounting brackets (1) or i-Size mounting brackets (2).
- Attach the ISOFIX child restraint system to both ISOFIX mounting brackets (1) or i-Size mounting brackets (2).

or

- Attach the i-Size child restraint system to both i-Size mounting brackets (2).
- After removing the child seat, replace each cover for ISOFIX mounting brackets (1) or i-Size mounting brackets (2).

Securing Top Tether

WARNING Risk of injury or death if the rear seat backrests are not locked after fitting Top Tether belts

If the rear seat backrests are not locked, they could fold forwards in the event of an accident, heavy braking or sudden changes of direction.

As a result, child restraint systems cannot perform their intended protective function. Rear seat backrests that are not locked can also cause additional injuries, e.g. in the event of an accident.

- Always lock rear seat backrests after fitting Top Tether belts.
- Observe the lock verification indicator.

If the seat backrest is not engaged and locked, this will be shown in the multifunction display in the instrument cluster.

The risk of injury can be reduced by Top Tether as Top Tether provides an additional connection between the child restraint system secured with ISOFIX or i-Size and the vehicle.

The child restraint system must be equipped with a Top Tether belt.

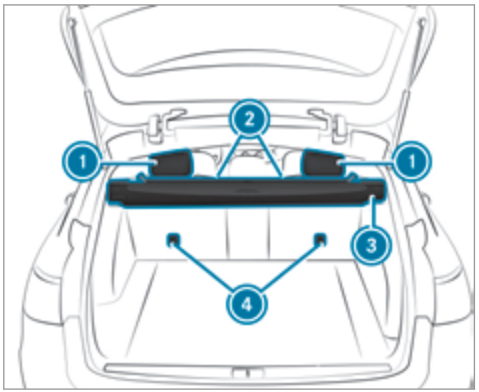

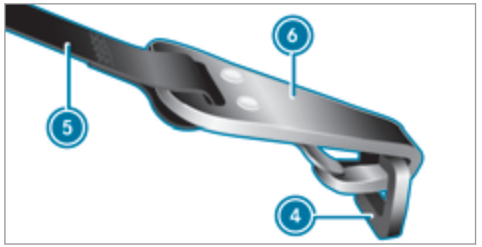

- If necessary, move head restraint (1) upwards Adjusting the rear seat head restraints(→ page 93).
- Fit the ISOFIX or i-Size child restraint system with Top Tether. Always comply with the child restraint system manufacturer's installation instructions when doing so.
- Route Top Tether belt (5) under head restraint (1) between the two head restraint bars.
- Guide Top Tether belt (5) downwards between combined luggage cover and net (3) and backrest (2).
- Hook Top Tether hook (6) of Top Tether belt (5) without twisting into Top Tether anchorage (4).
- Tension Top Tether belt (5). Always comply with the child restraint system manufacturer's installation instructions when doing so.
- If necessary, move head restraint (1) downwards Adjusting the rear seat head restraints(→ page 93). Make sure that you do not interfere with the correct routing of Top Tether belt (5).

Child restraint systems on the front passenger seat

Notes on child restraint systems on the front passenger seat

Accident statistics show that children secured in the rear seats are safer than children secured in the front seats. For this reason, Mercedes-Benz strongly advises that you install a child restraint system on a rear seat.

If it is absolutely necessary to install a child restraint system on the front passenger seat, always observe the information on the automatic front passenger airbag shutoff (→ page 35).

By doing this, you can avoid risks caused by:

- A child restraint system that is not detected by the automatic front passenger airbag shutoff.
- The unintentionally disabled front passenger airbag.
- Incorrect positioning of the child restraint system.

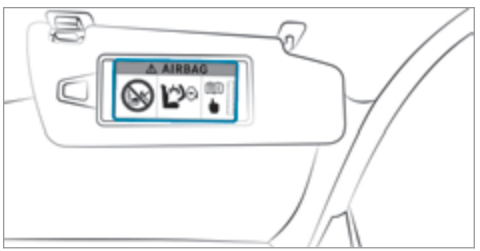

Warning notice on the front-passenger sun visor:

WARNING Risk of injury or death caused by using a rearward-facing child restraint system when the front passenger airbag is enabled

If you secure a child in a rearward-facing child restraint system on the front passenger seat and the PASSENGER AIR BAG OFF indicator lamp is off, the front passenger airbag can deploy in the event of an accident.

The child could be struck by the airbag.

Always make sure that the front passenger airbag is disabled. The PASSENGER AIR BAG OFF indicator lamp must be lit.

NEVER use a rearward facing child restraint on a seat protected by an ACTIVE FRONT AIRBAG in front of it; DEATH or SERIOUS INJURY to the CHILD can occur.

If the PASSENGER AIR BAG OFF indicator lamp goes out, the front passenger airbag is enabled.

Be sure to observe the notes on the safe transportation of children (→ page 41).

Vehicles without the automatic front passenger airbag shutoff

Vehicles without automatic front passenger airbag shutoff have a special sticker affixed to the side of the cockpit on the front passenger side.



Never install a rearward-facing child restraint system on the front passenger seat:

The following notes must be observed:

- On forward-facing and rearward-facing child restraint systems on the front passenger seat (→ page 47).
- On attaching suitable child restraint systems (→ page 48).

Forward-facing and rearward-facing child restraint systems on the front passenger seat

When using a rearward-facing child restraint system on the front passenger seat, the front passenger airbag must always be disabled. This is only the case if the PASSENGER AIR BAG OFF indicator lamp is lit continuously (→ page 37).

When using a child restraint system on the front passenger seat, it is essential to observe the following:

- Move the front passenger seat as far back as possible.
- Set the seat backrest to an almost vertical position.
- Retract the seat cushion length as far as possible.

- The entire base of the child restraint system must always rest on the sitting surface of the front passenger seat.
- The backrest of the forward-facing child restraint system must, as far as possible, be resting on the seat backrest of the front passenger seat. The child restraint system must not touch the roof or be put under strain by the head restraints.
- If necessary, adjust the angle of the seat backrest and the head restraint position accordingly.
- Move the seat cushion inclination to the highest, most vertical position.
- Always make sure that the shoulder belt strap is correctly routed from the seat belt outlet of the vehicle to the shoulder belt guide on the child restraint system. The shoulder belt strap must be routed forwards and downwards from the seat belt outlet.
- If necessary, adjust the seat belt outlet and the front passenger seat accordingly.
- Never place objects, e.g. a cushion, under or behind the child restraint system.

Always comply with the manufacturer's installation and operating instructions for the child restraint system used, and the notes on fitting suitable child restraint systems (→ page 48).

Suitability of the seats for child restraint systems

Notes on attaching suitable child restraint systems

Only child restraint systems with the following ECE standards are permitted for use in the vehicle:

- ECE R44
- ECE-R129 (i-Size child restraint systems)

Examples of approval labels on child restraint systems:



Label for child restraint systems in accordance with ECE R-44

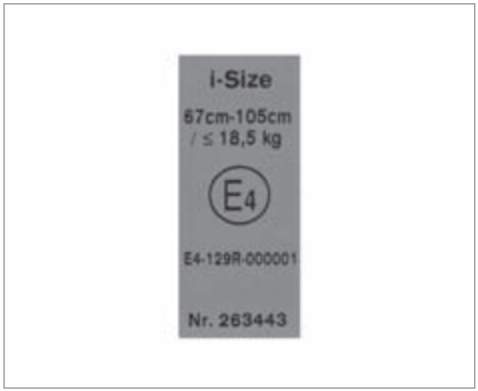

Label for child restraint systems in accordance with ECE R-129

ISOFIX or i-Size child restraint systems of the following “Universal“ category can be used, in accordance with the tables on suitability of seats for the attachment of child restraint systems, on seats marked U, UF, IUF or i-U.

Semi-universal child restraint systems are indicated by the text "semi-universal" on the approval label. They can only be used if the vehicle and the seat are listed in the child restraint system manufacturer's vehicle model list.

Suitability of the seats for attaching belt-secured child restraint systems

Observe the following information:

- **When using a baby car seat of the category 0/0+ and a rearward-facing child restraint system on a rear seat:** adjust the driver's and front passenger seat such that the seat does not touch the child restraint system.
- **When using a forward-facing child restraint system of category I**: remove the head restraint from the respective seat, if possible. In addition, the seat backrest of the child restraint system must, as far as possible, lie flat against the backrest of the vehicle seat.
- When you remove the child restraint system, fit the head restraint immediately and adjust all the head restraints again correctly.
- For certain child restraint systems in weight categories II or III, there might be restrictions in the maximum size setting, e.g. due to possible contact with the roof.
- Make sure that the child's feet do not touch the front seat. If necessary, move the front seat forward slightly.
- The child restraint system must not touch the roof or be put under strain by the head restraints. Adjust the head restraints accordingly.
- Observe the manufacturer's installation instructions for the child restraint system.

Legend for the table:

X	Not suitable for children in this weight category.
U	Suitable for child restraint systems of the "Universal" category in this weight category.

UF	Suitable for forward-facing child restraint systems of the "Universal" category in this weight category.
L	Suitable for semi-universal child restraint systems according to the table in "Recommended child restraint systems", or if the vehicle and the seat are listed in the child restraint system manufacturer's vehicle model list.

Front passenger seat:

Weight categories	Front passenger airbag enabled	Front passenger airbag disabled[1]
Category 0: up to 10 kg	X	U, L
Category 0+: up to 13 kg	X	U, L
Category I: 9 to 18 kg	UF, L	U, L
Category II: 15 to 25 kg	UF, L	U, L
Category III: 22 to 36 kg	UF, L	U, L

[1] The vehicle is equipped with an automatic front passenger airbag shutoff. The PASSENGER AIR BAG OFF indicator lamp must be lit.

Rear seats:

Weight categories	Left, right	Middle[1]
Category 0: up to 10 kg	U, L	U, L
Category 0+: up to 13 kg	U, L	U, L
Category I: 9 to 18 kg	U, L	U, L
Category II: 15 to 25 kg	U, L	U
Category III: 22 to 36 kg	U, L	U

[1] Child restraint systems with a supporting bracket are not suitable for this seat.

Suitability of the seats for attaching ISOFIX child restraint systems

Observe the following information:

- **When using a baby car seat of category 0/0+ and a rearward-facing child restraint system of category I on a rear seat:** adjust the driver's and front passenger seat such that the seat does not touch the child restraint system.
- **When using a forward-facing child restraint system of category I:** remove the head restraint from the respective seat if possible and position the seat backrest of the child restraint system as flat as possible against the seat backrest of the vehicle seat.
- When you remove the child restraint system you must install the head restraint again immediately and adjust all of the head restraints correctly.
- For certain child restraint systems in weight categories II or III, there might be restrictions in the maximum size setting, e.g. due to possible contact with the roof.
- Make sure that the child's feet do not touch the front seat. If necessary, move the front seat forward slightly.
- The child restraint system must not touch the roof or be put under strain by the head

restraints. Adjust the head restraints accordingly.

- Observe the manufacturer's installation instructions for the child restraint system.

Legend for the table:

X	Not suitable for an ISOFIX child restraint system in this weight category and/or size category.
IUF	Suitable for forward-facing ISOFIX child restraint systems of the"Universal" category in this weight category.
IL	Suitable for ISOFIX child restraint systems according to the table in "Overview of the recommended child restraint systems", or if the vehicle and the seat are listed in the child restraint system manufacturer's vehicle model list.

Weight categories	Size category	Equipment	Rear seat Left, right
Carry cot	F G	ISO/L1 ISO/L2	X X
Category 0: up to 10 kg and approx. 6 months	E	ISO/R1	IL
Category 0+: up to 13 kg and approx. 15 months	E D C	ISO/R1 ISO/R2 ISO/R3	IL IL IL[1]

Weight categories	Size category	Equipment	Rear seat Left, right
Category I: 9 to 18 kg and between approx. 9 months and 4 years	D	ISO/R2	IL
	C	ISO/R3	IL[1]
	B	ISO/F2	IUF
	B1	ISO/F2X	IUF
	A	ISO/F3	IUF

[1] When using a child restraint system of the size category (ISO/R3), move the front seat to the highest position and move the seat backrest to an upright position. Make sure that the seat backrest of the front seat does not rest against the child restraint system.

Suitability of the seats for attaching i-Size child restraint systems

Observe the following information:

- **When using a rearward-facing child restraint system:** adjust the front seat so that it does not touch the child restraint system.
- **When using a forward-facing child restraint system:** remove the head restraint from the respective seat, if possible. In addition, the seat backrest of the child restraint system must, as far as possible, lie flat against the backrest of the vehicle seat.
- When you remove the child restraint system you must install the head restraint again immediately and adjust all the head restraints correctly.
- Make sure that the child's feet do not touch the front seat. If necessary, move the front seat forward slightly.
- Observe the manufacturer's installation instructions for the child restraint system.

Legend for the table:

X	Not suitable for an i-Size child restraint system in the "Universal" category.
i-U	Suitable for forward-facing and rearward-facing i-Size child restraint systems in the "Universal" category.

	Front passenger seat	Left rear seat	Centre rear seat	Right rear seat
i-Size child restraint system	X	i-U	X	i-U

Suitability of the folding bench seat for the attachment of child restraint systems
Do not, under any circumstances, use a rearward-facing child seat on the folding bench seat (third row of seats).

Legend for the table:

X	Not suitable for children in this weight category.
L	Suitable for semi-universal child restraint systems according to the table in "Recommended child restraint systems", or if the vehicle and the seat are listed in the child restraint system manufacturer's vehicle model list.

Folding bench seat (third row of seats):

Weight categories	Left, right
Category 0: up to 10 kg	X
Category 0+: up to 13 kg	X
Category I: 9 to 18 kg	L[1]
Category II: 15 to 25 kg	L[2]
Category III: 22 to 36 kg	X

Weight categories	Left, right
[1] Only use the approved child seat MB Duo plus.	
[2] Only use the approved child seats KIDFIX or KIDFIX XP for children up to the age of approx. 6 years and not taller than 1.15 m.	

Overview of recommended child restraint systems

Recommended child restraint systems for attaching with the vehicle seat belt

Weight categories	Manufacturer	Type	Approval number (E1 ...)	Order number (A 000 ...) colour code 9H95
Category 0: up to 10 kg up to approximately 6 months	Britax Römer	BABY SAFE plus II	04 301 146	970 20 00 970 36 00
Category 0+: up to 13 kg up to approximately 15 months	Britax Römer	BABY SAFE plus II	04 301 146	970 20 00 970 36 00

Weight categories	Manufacturer	Type	Approval number (E1 ...)	Order number (A 000 ...) colour code 9H95
Category I: 9 to 18 kg between approximately 9 months and 4 years	Britax Römer	DUO plus	04 301 133	970 16 00 970 37 00
Category II/III: 15 to 36 kg between approximately 4 and 12 years	Britax Römer	KIDFIX	04 301 198	970 19 00 970 38 00
	Britax Römer	KIDFIX XP	04 301 304	970 61 00

Recommended "Universal" and "Semi-Universal" category ISOFIX child restraint systems

Weight categories	Size category	Manufacturer	Type	Approval number (E1 ...)	Order number (colour code: 9H95)
Category 0+: up to 13 kg up to approximately 15 months	E	Britax Römer	BABY SAFE plus	04 301 146	B6 6 86 8224
Category I: 9 to 18 kg	B1	Britax Römer	DUO plus	04 301 133	A 000 970 16 00 A 000 970 37 00

ⓘ You can obtain further information on the correct child restraint system at any Mercedes-Benz Service Centre.

Child safety locks

Activating/deactivating the child safety lock for the rear doors

⚠ **WARNING** Risk of accident and injury due to children left unattended in the vehicle

If you leave children unattended in the vehicle, they may be able to set the vehicle in motion, for example by:

- Releasing the parking brake.

- Shifting the automatic transmission out of park position P or shifting the manual transmission into neutral.
- Starting the engine.

In addition, they may operate vehicle equipment.

- ▶ Never leave children and animals unattended in the vehicle.
- ▶ When leaving the vehicle, always take the key with you and lock the vehicle. This also applies to mobile phones if the "Digital Car Key in the smartphone" function is activated via the Mercedes connect me web app.

⚠ **WARNING** This poses an increased risk of death due to heat stroke or exposure to cold in the vehicle

If persons – particularly children – - experience prolonged exposure to extremely high or low temperatures, this poses a risk of injury or even fatal injury.

- ▶ Never leave anyone – particularly children – unattended in the vehicle.

⚠ **WARNING** Risk of accident and injury due to children left unattended in the vehicle

If children are travelling in the vehicle, they could:

- Open doors, thereby endangering other persons or road users.
- Get out of the vehicle and be hit by oncoming traffic.
- Operate vehicle equipment and become trapped, for example.

- ▶ Always activate the child safety locks installed if children are travelling in the vehicle.
- ▶ Never leave children unattended in the vehicle.
- ▶ When leaving the vehicle, always take the key with you and lock the vehicle. This also applies to mobile phones if the "Digital Car Key in the smartphone" function is activated via the Mercedes connect me web app.

Child safety locks are available for the rear doors and for the rear side windows.
The child safety lock on the rear doors secures each door separately. The doors can no longer be opened from the inside.

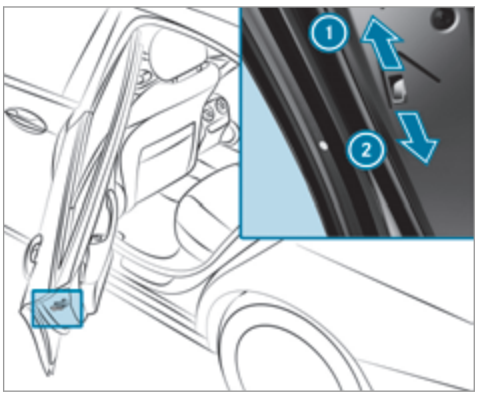

- ▶ Press the lever in direction ① **(activate)** or ② **(deactivate)**.
- ▶ Make sure that the child safety locks are working properly.

Activating/deactivating the child safety lock for the rear side windows

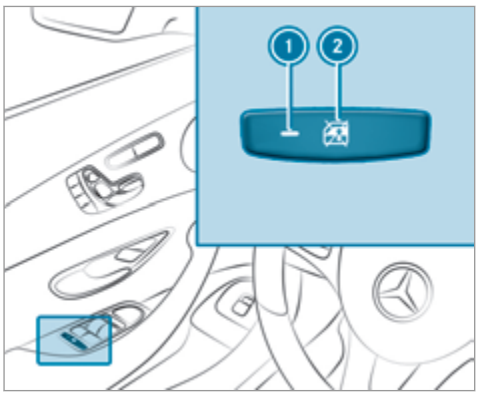

- ▶ **To activate/deactivate:** press button ②.

Opening/closing the side window in the rear is possible:

- With indicator lamp ① lit: via the switch on the driver's door.
- With indicator lamp ① off: via the switch on the corresponding rear door or driver's door.

ⓘ **Vehicles with folding bench seat**: The switch for opening the tailgate which is located on the right-hand wheel arch when viewed in the direction of travel is also secured.

Pets in the vehicle

⚠ **WARNING** Risk of accident and injury due to animals left unsecured or unattended in the vehicle

If you leave animals in the vehicle unattended or unsecured, they could possibly press down buttons or switches.

Thereby an animal may:

- activate vehicle equipment and become trapped, for example
- switch systems on or off and endanger other road users

Unsecured animals may be thrown around in the vehicle in the event of an accident or sudden steering and braking manoeuvres and injure vehicle occupants in the process.

- ▶ Never leave animals in the vehicle unattended.
- ▶ Always correctly secure animals while driving, e.g. using a suitable animal carrier.

Key

Overview of key functions

WARNING - There is a risk of accident and injury if you leave children unattended in the vehicle

If children are left unattended in the vehicle, they could:

- open doors, thereby endangering other persons or road users.
- get out of the vehicle and be hit by oncoming traffic.
- operate vehicle equipment.

Moreover, the children could also set the vehicle in motion by, for example:

- releasing the parking brake
- shifting the automatic transmission out of park position P [P] or shifting manual transmission into idle position.
- starting the engine.

- ▶ Never leave children or animals unattended in the vehicle.
- ▶ When leaving the vehicle, always take the key with you and lock the vehicle.
- ▶ Keep the vehicle key out of the reach of children.

NOTE Damage to the key caused by magnetic fields

- ▶ Keep the key away from strong magnetic fields.



1. Locks
2. Battery check lamp
3. Unlocks
4. Opens/closes the tailgate

The key locks and unlocks the following components:

- The doors
- The tailgate
- The fuel filler flap

If you do not open the vehicle within approximately 40 seconds after unlocking:

- The vehicle is locked again.

- Anti-theft protection is reactivated.

Do not keep the key together with electronic devices or metal objects. This can affect the key's functionality.

ⓘ If battery check lamp (2) does not light up after pressing the [🔓] or [🔒] button, the battery is discharged.

Activating/deactivating the acoustic locking verification signal

Multimedia system:

→ Vehicle ▸▸ Vehicle settings ▸▸ Acoustic lock feedback

▶ Activate ☑ or deactivate ☐ the function.

Priming/deactivating the panic alarm

Requirements:

- Ignition switched off.



▶ **To prime:** press button (1) for approximately one second.
A visual and audible alarm is triggered.
▶ **To deactivate:** briefly press button (1) again.

or

▶ Press the start/stop button on the cockpit (the key is inside the vehicle).

Changing the unlocking settings

Possible unlocking functions of the key:

- Central unlocking
- Unlocking the driver's door and fuel filler flap

▶ **To switch between settings:** press the [🔓] and [🔒] buttons simultaneously for approximately six seconds until the battery check lamp flashes twice.

If the unlocking function for the driver's door and fuel filler flap has been selected:

- Pressing the [🔓] button a second time centrally unlocks the vehicle.
- **Vehicles with KEYLESS-GO:** If you touch the inner surface of the door handle on the driver's door, only the driver's door and fuel filler flap are unlocked.

Reducing the energy consumption of the key

If you do not intend to use the vehicle for an extended period of time, you can deactivate the following functions on the key.

- KEYLESS-GO starting function
- KEYLESS-GO

- **To deactivate:** press the button on the key twice in rapid succession.
  The battery check lamp of the key flashes twice briefly and lights up once.
- **To activate:** press any button on the key.

ⓘ When the vehicle is started with the key in the stowage compartment of the centre console (→ page 157), the key functions are automatically activated.

Inserting/removing the emergency key

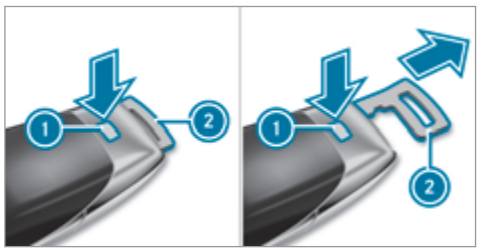

- **To remove:** press release knob 1.
  Emergency key 2 is pushed out slightly.
- Pull out emergency key 2 until it engages in the intermediate position.

ⓘ You can use the intermediate position of emergency key 2 to attach the key to a key ring.

- Press release knob 1 again and fully remove emergency key 2.
- **To insert:** press release knob 1.
- Insert emergency key 2 to the intermediate position or fully until it engages.

Replacing the key battery

⚠ **DANGER** Serious damage to health caused by swallowing batteries

Batteries contain toxic and corrosive substances. Swallowing batteries may cause serious damage to health.

There is a risk of fatal injury.

- Keep batteries out of the reach of children.
- If batteries are swallowed, seek medical attention immediately.

ENVIRONMENTAL NOTE Environmental damage due to improper disposal of batteries

Batteries contain pollutants. It is illegal to dispose of them with the household rubbish.

- Dispose of batteries in an environmentally responsible manner. Take discharged batteries to a qualified specialist workshop or to a collection point for used batteries.

Requirements:
You require a CR 2032 3 V cell battery.

Mercedes-Benz recommends that you have the battery replaced at a qualified specialist workshop.

- Remove the emergency key (→ page 62).



- Press release button 2 down fully and remove cover 1.
- Remove battery compartment 3 and take out the discharged battery.
- Insert the new battery into battery compartment 3. Observe the positive pole marking in the battery compartment and on the battery.
- Push in battery compartment 3.
- Replace cover 1 so that it engages.

Problems with the key

Problem	Possible causes/consequences and ▶ Solutions
You can no longer lock or unlock the vehicle.	Possible causes: • The key battery is discharged or nearly discharged. • There is interference from a powerful radio signal source. • The key is faulty.

Problem	Possible causes/consequences and ▶ Solutions
	▶ Check the battery using the battery check lamp and replace if necessary . ▶ Use the emergency key to lock or unlock the vehicle . ▶ Have the key checked at a qualified specialist workshop.
You have lost a key.	▶ Have the key deactivated at a qualified specialist workshop. ▶ If necessary, have the locks changed as well.

Doors

Notes on the additional door lock

The additional door lock is only available for vehicles for the United Kingdom.

⚠ **WARNING** Risk of injury to persons inside the vehicle when the additional door lock is activated

If the additional door lock is activated, the doors can no longer be opened from the inside.

If there are persons in the vehicle, they can no longer leave the vehicle, e.g. in hazardous situations.

- ▶ Never leave persons unattended in the vehicle, particularly children, elderly persons or persons in need of help.
- ▶ If there are persons in the vehicle, do not activate the additional door lock.

The additional door lock is automatically activated:

- After locking the vehicle with the key.
- After locking the vehicle using KEYLESS-GO.

If the additional door lock is activated, the doors cannot be opened from the inside.

You can deactivate the additional door lock by deactivating the interior protection (→ page 85).

Unlocking and opening the doors from the inside

United Kingdom only: observe the notes on the additional door lock (→ page 64).

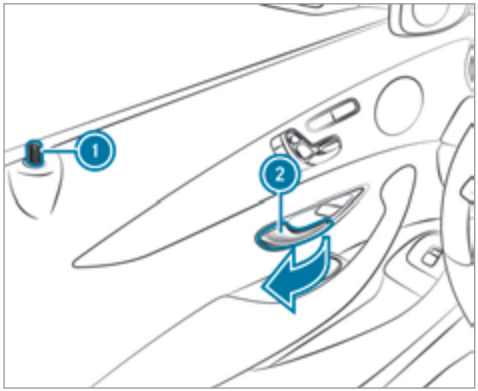

▶ Pull door handle (2).
Locking pin (1) pops up when the door is unlocked.

Locking/unlocking the vehicle centrally from the inside

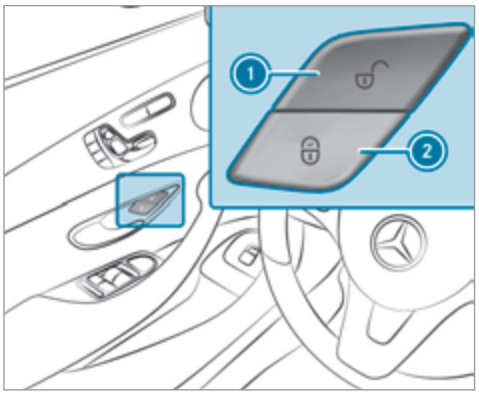

▶ **To unlock:** press button (1).
▶ **To lock:** press button (2).

This does not lock or unlock the fuel filler flap.

The vehicle is not unlocked:

- If you have locked the vehicle using the key.
- If you have locked the vehicle using KEYLESS-GO.

Unlocking/locking the vehicle via a mobile phone

Requirements:

- Vehicle with the "Digital Car Key in the smartphone" function.
- The "Digital Car Key in the smartphone" function is activated via the Mercedes me connect web app: https://www.mercedes.me.
- Suitable mobile phone with NFC aerial (Near Field Communication) and Secure Element.
- Sufficient charge level of the mobile phone. On some mobile phones, the function is also available when the battery is discharged.

If the vehicle has been parked for longer than two weeks, the NFC aerial in the door handle is deactivated. Pull the door handle to activate the NFC aerial again.

ⓘ You can check the suitability of your mobile phone by entering the phone number at https://www.mercedes.me.

Information about suitable mobile phones can be obtained from your Mercedes-Benz Service Centre or on the Internet at http://www.mercedes-benz.com/connect.

ⓘ The function is only available in combination with Mercedes me connect and only in certain countries.

ⓘ Protective cases around the mobile phone can impair the functionality.

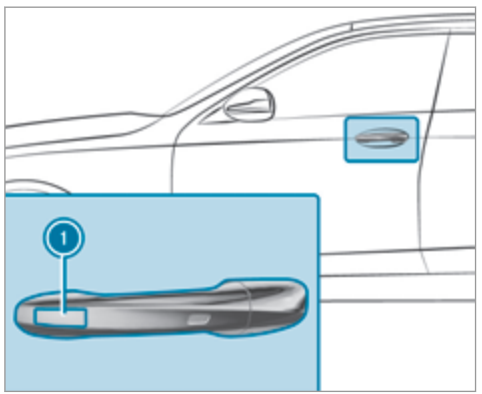

▶ Touch the door handle on the driver's door in the area where NFC aerial ① is located with the part of the mobile phone where the NFC aerial is located.
The vehicle is locked or unlocked alternately.

If you lose your mobile phone, deactivate the "Digital Car Key in the smartphone" service in Mercedes me connect at https://www.mercedes.me.

ⓘ Mercedes-Benz recommends that you carry the emergency key in case of function restrictions.

Locking and unlocking the vehicle with KEYLESS-GO

Requirements:

- The key must be outside the vehicle.
- The distance between the key and the vehicle must not exceed 1 m.
- The driver's door and the door at which the door handle is used must both be closed.

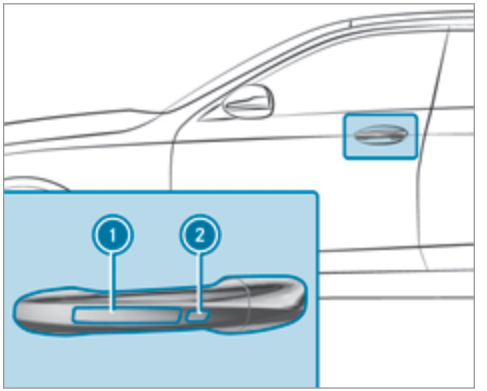

▶ **To unlock the vehicle:** touch the inner surface of the door handle.

▶ **To lock the vehicle:** touch sensor surface ① or ②.

▶ **Convenience closing:** touch recessed sensor surface ② for an extended period.

ⓘ For further information on convenience closing (→ page 77).

If you open the tailgate from outside it is automatically unlocked.

Problems with KEYLESS-GO

Problem	Possible causes/consequences and ▶ Solutions
You can no longer lock or unlock the vehicle using KEYLESS-GO.	Possible causes: • KEYLESS-GO has been deactivated . • The key battery is discharged or nearly discharged. • There is interference from a powerful radio signal source. • The key is faulty. ▶ Activate KEYLESS-GO . ▶ Check the battery using the battery check lamp and replace if necessary . ▶ Use the emergency key to lock or unlock the vehicle . ▶ Have the vehicle and key checked at a qualified specialist workshop.

Switching the automatic locking feature on/off

The vehicle is locked automatically when the ignition is switched on and the wheels are turning faster than walking pace.

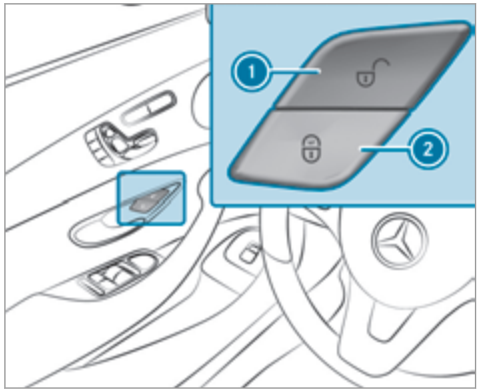

- **To deactivate:** press and hold button (1) for approximately five seconds until an acoustic signal sounds.
- **To activate:** press and hold button (2) for approximately five seconds until an acoustic signal sounds.

Danger of being locked out when the function is activated:

- If the vehicle is being tow started/pushed.
- On a roller dynamometer.

Unlocking/locking the driver's door using the emergency key element

ⓘ If you wish to lock the vehicle entirely using the emergency key, first press the button for locking from the inside while the driver's door is open. Then proceed to lock the driver's door using the emergency key element.

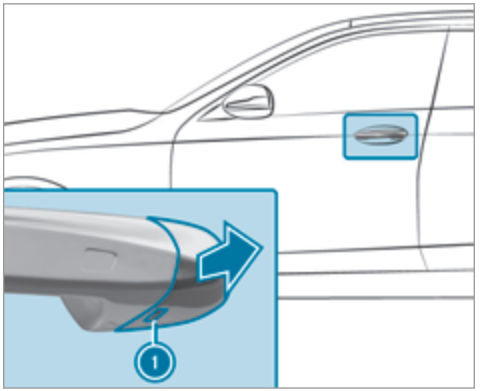

- Insert the emergency key into opening (1) in the cover.
- Pull and hold the door handle.
- Pull the cover on the emergency key as straight as possible away from the vehicle until it releases.
- Release the door handle.

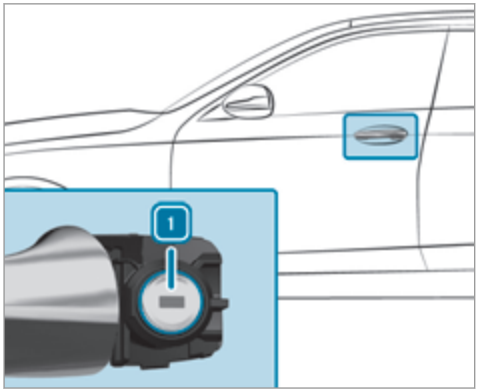

- **To unlock:** turn the emergency key anticlockwise to position 1.
- **To lock:** turn the emergency key clockwise to position 1.

ⓘ **Right-hand drive vehicles:** turn the emergency key in the opposite direction in each case.

- Carefully press the cover onto the lock cylinder until it engages and is seated firmly.

Load compartment

Opening the tailgate

⚠ **WARNING** Risk of exhaust gas poisoning

Combustion engines emit poisonous exhaust gases such as carbon monoxide. Exhaust gases can enter the vehicle interior if the tailgate is open when the engine is running, especially if the vehicle is in motion.

- Always switch off the engine before opening the tailgate.
- Never drive with the tailgate open.

! **NOTE** Damage to the tailgate caused by obstacles above the vehicle

The tailgate swings rearwards and upwards when it is opened.

- Make sure that there is sufficient space behind and above the tailgate.

To open the tailgate, the following options are available:

- Press and hold the button on the key.
- If the tailgate is unlocked, pull the tailgate handle and release it again immediately.
- With the tailgate stopped in an intermediate position, pull the tailgate upwards. Release it as soon as it begins to open.

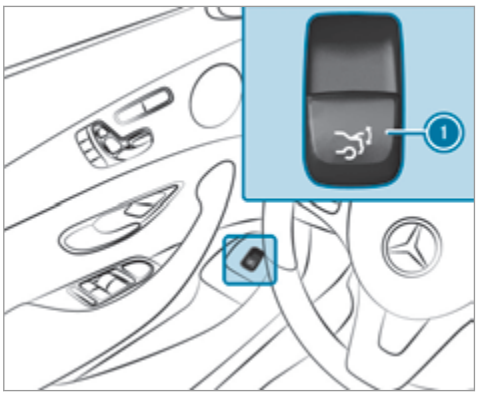

- Pull remote opening switch (1) for the tailgate.
- **Vehicles with HANDS-FREE ACCESS:** move your foot below the bumper (→ page 72).

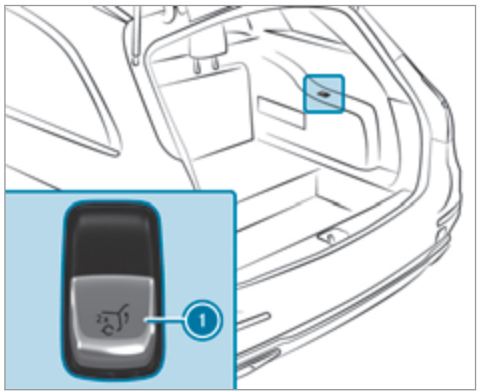

- **Vehicles with folding bench seat:** pull button (1) for the tailgate twice.
The tailgate is unlocked.

If the tailgate has been locked from the outside, or the child safety lock has been activated, the tailgate cannot be unlocked with button (1).

The tailgate is equipped with an automatic obstacle detection function. If a solid object blocks or restricts the tailgate when automatically opening, this process is stopped. The automatic obstacle detection function is only an aid. It is not a substitute for your attentiveness when opening the tailgate.

Closing the tailgate

WARNING Risk of injury from unsecured items in the vehicle

If objects, luggage or loads are not secured or not secured sufficiently, they could slip, tip over or be flung around and thereby hit vehicle occupants.

There is a risk of injury, particularly in the event of sudden braking or a sudden change in direction.

- Always store objects in such a way that they cannot be flung around.
- Before the journey, secure objects, luggage or loads against slipping or tipping over.

WARNING Risk of becoming trapped during automatic closing of the tailgate

Parts of the body could become trapped during automatic closing of the tailgate. Moreover, people, e.g. children, may be standing in the closing area or may enter the closing area during the closing process.

- Make sure that nobody is in the vicinity of the closing area during the closing process.

Use one of the following options to stop the closing process:

- press the button on the key.
- press or pull the remote operating switch on the driver's door.

- press the closing or locking button on the tailgate.
- Pull the tailgate handle.

Vehicles with HANDS-FREE ACCESS: it is also possible to stop the closing process by moving your foot in a kicking motion under the rear bumper.

To close the tailgate, the following options are available:

- Pull the tailgate downwards slightly. Release it as soon as it begins to close.
- Press and hold the button on the key (with the key in the vicinity of the vehicle).

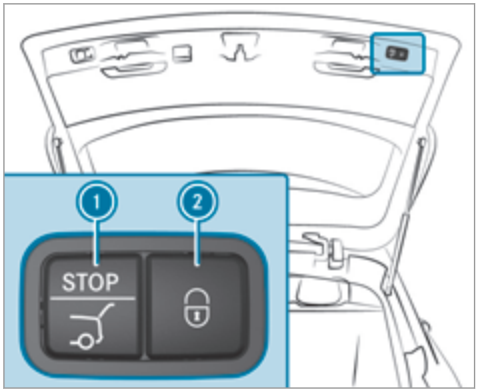

- Press closing button 1 on the tailgate.
- **Vehicles with KEYLESS-GO:** press locking button 2 in the tailgate.
  If a key is detected outside the vehicle, the tailgate closes and the vehicle is locked.

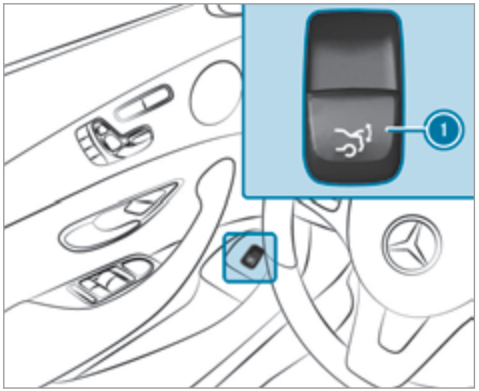

- Press remote operating switch 1 for the tailgate.
- **Vehicles with HANDS-FREE ACCESS:** move your foot below the bumper (→ page 72).

Automatic reversing function for the tailgate
The tailgate is equipped with automatic obstacle detection with reversing function. If a solid object blocks or restricts the tailgate when automatically closing, the tailgate automatically

opens again slightly. The automatic obstacle detection with reversing function is only an aid. It is not a substitute for your attentiveness when closing the tailgate.

▶ When closing, make sure that no body parts are in the closing area.

⚠ WARNING Risk of becoming trapped despite reversing function

The reversing function does not react:

- to soft, light and thin objects, e.g. fingers.
- over the last 8 mm of the closing path.

In these situations in particular, the reversing function cannot prevent someone being trapped.

▶ When closing, make sure that no body parts are in the closing area.

If someone is trapped:

- press the [button] button on the key, or
- press or pull the remote operating switch on the driver's door, or
- press the closing or locking button on the tailgate, or
- Pull the tailgate handle.

HANDS-FREE ACCESS function



With HANDS-FREE ACCESS you can open, close or stop the closing process of the tailgate by performing a kicking movement under the rear bumper.

The kicking movement triggers the opening or closing process alternately.

Observe the notes when opening (→ page 69) and closing (→ page 70) the tailgate.

ⓘ Two warning tones sound when the tailgate is opening or closing.

⚠ WARNING Risk of burns caused by a hot exhaust system

The vehicle exhaust system can become very hot. If you use HANDS-FREE ACCESS, you could burn yourself by touching the exhaust system.

▶ Always ensure that you only make a kicking movement within the detection range of the sensors.

! NOTE Vehicle damage due to unintentional opening of the tailgate

- when using an automatic car wash

- when using a high pressure cleaner

▶ Deactivate KEYLESS-GO or make sure that the key located is at least 3 m away from the vehicle in such situations.

When making the kicking movement, make sure that you are standing firmly on the ground you could otherwise lose your balance, e.g. on ice.

Requirements:

- The key is behind the vehicle.
- Stand at least 30 cm away from the vehicle while performing the kicking movement.
- Do not come into contact with the bumper while making the kicking movement.
- Do not carry out the kicking movement too slowly.
- The kicking movement must be towards the vehicle and back.

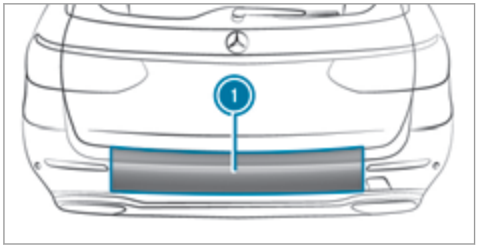

1 Sensor detection range

If several consecutive kicking movements are not successful, wait ten seconds.

System limitations

The system may be impaired or may not function if:

- The area around the sensor is dirty, e.g. due to road salt or snow.
- The kicking movement is made using a prosthetic leg.

The tailgate can open or close unintentionally in the following situations:

- If persons' arms or legs move in the sensor detection range, e.g. when polishing the vehicle, sitting on the edge of the luggage compartment, or picking up objects.
- If objects are guided behind or placed behind the vehicle, e.g. charging cables, tensioning straps or luggage.
- When working on the trailer coupling, trailers or rear bicycle racks.

Deactivate KEYLESS-GO (→ page 61) or do not carry the key about your person in such situations.

Limiting the opening angle of the tailgate

Activating the opening angle limiter

You can limit the opening angle of the tailgate in the top half of its opening range, to approximately 20 cm before the end position.

▶ Stop the opening procedure of the tailgate at the desired position.

- Press and hold the closing button in the tailgate until you hear a short acoustic signal. The opening angle limiter is activated. The tailgate then stops in the stored position when opened.

To open the tailgate fully, pull the handle on the outside of the tailgate again after it has stopped automatically.

Deactivating the opening angle limiter

- Press and hold the closing button on the tailgate until two short tones sound.

Unlocking the tailgate with the emergency key

- Fold the rear seat backrest forwards.
- Remove the combined luggage cover and net (→ page 109).

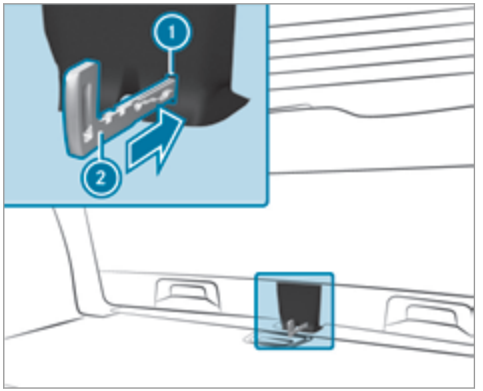

- Insert emergency key element (2) into opening (1) in the trim and push it in.
The tailgate is unlocked.

Emergency release of the tailgate from the inside (vehicles with a folding bench seat)

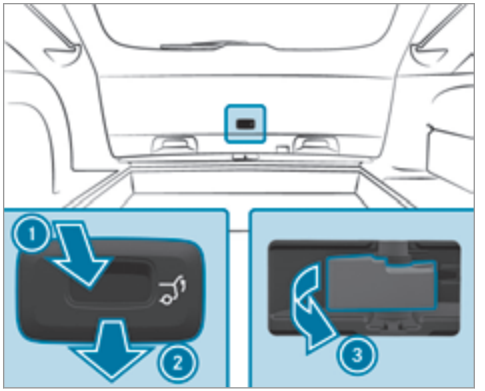

- Press the cover down in the direction of arrow (1) and pull in the direction of arrow (2) and remove it.
- Pull the emergency release lever in the direction of arrow (3).
The tailgate is unlocked.

Roller sunblinds

Extending the rear side window roller sunblinds

! NOTE Damage to the inertia reel due to it snapping back

If suddenly snapped back, the inertia reel may be damaged.

- Always move the roller sun blind manually.
- Do not drive with the roller sun blind hooked in and one or more side windows open at the same time.

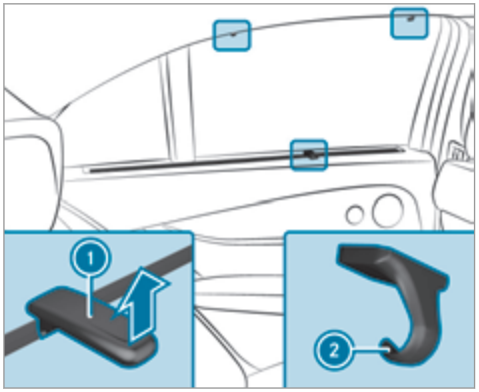

- Pull the roller sunblind out by tab (1) and hook it onto brackets (2) at the top of the window.

Side windows

Opening/closing the side windows

⚠ WARNING Risk of becoming trapped when opening a side window

When you open a side window, parts of the body could be drawn in or become trapped between the side window and window frame.

- When opening, make sure that nobody is touching the side window.
- If someone is trapped, release the button immediately or pull it in order to close the side window again.

⚠ WARNING Risk of becoming trapped when closing a side window

When closing a side window, body parts could be trapped in the closing area in the process.

- When closing, make sure that no body parts are in the closing area.

- If someone is trapped, release the button immediately or press the button in order to reopen the side window.

⚠ WARNING Risk of becoming trapped when children operate the side windows

Children could become trapped if they operate the side windows, particularly when unattended.

- Activate the override feature for the rear side windows.
- When leaving the vehicle, always take the key with you and lock the vehicle.
- Never leave children unattended in the vehicle.

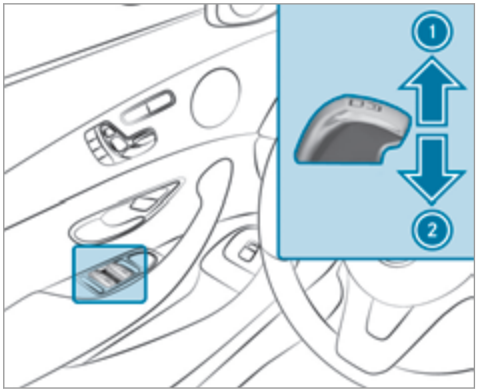

1 To close
2 To open

The buttons in the driver's door take precedence.

- **To start automatic operation:** press/pull the [⊟] button beyond the pressure point.
- **To interrupt automatic operation:** press or pull the [⊟] button again.

Automatic reversing function for the side windows

If an object blocks a side window during the closing process, the side window opens again automatically. The automatic reversing function is only an aid and is not a substitute for your attentiveness.

- When closing, make sure that no body parts are in the closing area.

⚠ WARNING Risk of becoming trapped despite there being reversing protection on the side window

The reversing function does not react:

- to soft, light and thin objects, e.g. small fingers
- over the last 4 mm of the closing path
- during resetting
- when closing the side window again manually immediately after automatic reversing

This means that the reversing function cannot prevent someone from becoming trapped in these situations.

- When closing, make sure that no body parts are in the closing area.
- If someone becomes trapped, press the button to open the side window again.

Ventilating the vehicle before starting a journey (convenience opening)

WARNING Risk of entrapment when opening a side window

When opening a side window, parts of the body could be drawn in or become trapped between the side window and window frame.

- When opening, make sure that nobody is touching the side window.
- Release the button immediately if somebody becomes trapped.

- Press and hold the button on the key.

The following functions are performed:

- The vehicle is unlocked.
- The side windows are opened.
- The sliding sunroof is opened.
- The panoramic sliding sunroof is opened.
- The seat ventilation of the driver's seat is switched on.

If the roller sunblinds of the panoramic sliding sunroof are closed, the roller sunblinds are opened first.

- **To continue the opening procedure:** press the button again.
- **To interrupt convenience opening:** release the button.

Closing side windows from the outside (convenience closing)

WARNING Risk of entrapment caused by inadvertent convenience closing

When the convenience closing feature is operating, parts of the body could become trapped in the closing area of the side window and the sliding sunroof.

- Observe the complete closing procedure when using convenience closing.
- When closing, make sure that no body parts are in the closing area.

- Press and hold the button on the key.

The following functions are performed:

- The vehicle is locked.
- The side windows are closed.
- The sliding sunroof is closed.
- The panoramic sliding sunroof is closed.

- **To close the roller sunblinds:** press the button again.

▶ **To interrupt convenience closing:** release the [🔒] button.

ⓘ Convenience closing can also be operated with KEYLESS-GO (→ page 66).

Problems with the side windows

Problem	Possible causes/consequences and ▶ Solutions
A side window cannot be closed and you cannot see the cause.	▶ Check to see if any objects are in the window guide. ⚠ **WARNING** Risk of entrapment if reversing protection is not activated If you close a side window again immediately after it has been blocked or reset, the side window closes with increased or maximum force. The reversing feature is then not active. Parts of the body could be trapped in the closing area in the process. ▶ Make sure that no parts of the body are in the closing area. ▶ To stop the closing process, release the button or press the button again to reopen the side window. If a side window is obstructed during closing and reopens again slightly: ▶ Immediately after the window blocks, pull the corresponding button again until the side window has closed, and hold the button for an additional second. The side window is closed with increased force. If a side window is obstructed again during closing and reopens again slightly:

Problem	Possible causes/consequences and ▶ Solutions
	▶ Repeat the previous step. The side window is closed without the automatic reversing function.

Sliding sunroof

Opening/closing the sliding sunroof

ⓘ The term "sliding sunroof" also refers to the panoramic sliding sunroof.

⚠ **WARNING** Risk of becoming trapped while opening and closing the sliding sunroof

During opening and closing, parts of the body could get caught in the sweep of the sliding sunroof.

- ▶ When opening or closing, make sure that no body parts are in the sweep.
- ▶ Release the button immediately if somebody becomes trapped.

or

- ▶ Press the button in any direction during the automatic opening/closing process. The opening/closing process is stopped.

⚠ **WARNING** Risk of entrapment if the sliding sunroof is operated by children

Children operating the sliding sunroof could get caught in the moving parts, particularly if unattended.

- ▶ Never leave children unattended in the vehicle.
- ▶ When leaving the vehicle, always take the key with you and lock the vehicle.

⚠ **WARNING** Risk of entrapment while opening and closing the roller sunblinds

When opening or closing, make sure that no body parts become trapped between the roller sunblind and frame or sliding sunroof.

- ▶ When opening or closing, make sure that no body parts are in the sweep of the roller sunblind.
- ▶ Release the switch immediately if somebody becomes trapped.

or

- ▶ Press the switch in any direction during the automatic opening/closing process. The opening/closing process is stopped.

NOTE Malfunction caused by snow and ice

Snow and ice may lead to a malfunction of the sliding sunroof.

- Only open the sliding sunroof if it is free of snow and ice.

NOTE Damage caused by protruding objects

Objects that protrude from the sliding sunroof may damage the sealing strips.

- Do not allow anything to protrude from the sliding sunroof.

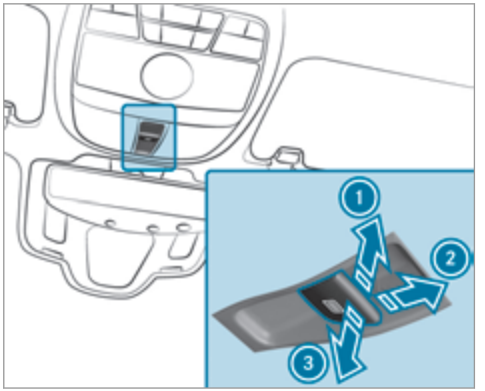

1 To raise
2 To open
3 To close/lower

Use the button to operate the panoramic sliding sunroof and the roller sunblind.

- The panoramic sliding sunroof can only be opened when the roller sunblind is open.
- The roller sunblind can only be operated when the panoramic sliding sunroof is closed.

- **To start automatic operation:** press/pull the button beyond the pressure point.
- **To interrupt automatic operation:** press/pull the button again.

Restrictions:

- The panoramic sliding sunroof cannot be opened if a roof rack is fitted. The panoramic sliding sunroof closes again automatically when it encounters resistance.

Automatic reversing function of the sliding sunroof

If there is an object obstructing the sliding sunroof during the closing process, the sliding sunroof opens again automatically. The automatic reversing function is only an aid and is not a substitute for your attentiveness.

- When closing, make sure that no body parts are in the closing area.

⚠ WARNING Risk of entrapment even with the reversing feature active

The reversing function does not react:

- to soft, light and thin objects, e.g. small fingers
- during the last 4 mm of the closing path
- during resetting
- when closing the sliding sunroof again manually immediately after automatic reversing

This means that the reversing feature cannot prevent someone being trapped in these situations.

- ▶ When closing, make sure that no body parts are in the closing area.
- ▶ Release the switch immediately if somebody becomes trapped.

or

- ▶ Press the switch in any direction during the automatic closing process.
  The closing process is stopped.

Automatic reversing function of the roller sunblind

If there is an object obstructing the roller sunblind during the closing process, the roller sunblind opens again automatically. The automatic reversing function is only an aid and is not a substitute for your attentiveness.

- ▶ When opening or closing the roller sunblind, make sure that no body parts are in the sweep.

⚠ WARNING Risk of becoming trapped despite the reversing function being active

In particular, the reversing function does not react to soft, light and thin objects, e.g. small fingers.

This means that the reversing function cannot prevent entrapment in these situations.

- ▶ When opening or closing the roller sunblind, make sure that no body parts are in the sweep.
- ▶ Release the button immediately if somebody becomes trapped.

or

- ▶ Press the button in any direction during the automatic closing process.
  The closing process is stopped.

Automatic features of the sliding sunroof

ⓘ The term "sliding sunroof" also refers to the panoramic sliding sunroof.

By pushing or pulling the button you can interrupt the automatic functions: "Rain closing function when driving " and "Automatic lowering feature".

Automatic closing when the vehicle is stationary

- If it starts to rain (detected by the rain sensor on the windscreen)
- At extreme outside temperatures
- After six hours
- If there is a malfunction in the power supply

The rear of the sliding sunroof is then raised.

Rain closing function when driving
Vehicles with a panoramic sliding sunroof: if it starts to rain, the raised sliding sunroof is automatically lowered while the vehicle is in motion.

Automatic lowering feature
Vehicles with a panoramic sliding sunroof: if the sliding sunroof is raised at the rear, the sliding sunroof is automatically lowered slightly at higher speeds. At low speeds it is raised again automatically.

⚠ **WARNING** Risk of entrapment by automatic lowering of the sliding sunroof

At high speeds the raised sliding sunroof automatically lowers slightly at the rear.

This could trap you or other persons.

▶ Make sure that nobody reaches into the sweep of the sliding sunroof whilst the vehicle is in motion.

▶ If somebody becomes trapped, immediately pull back the sliding sunroof switch.
The sliding sunroof lifts during opening.

Problems with the sliding sunroof

ⓘ The term "sliding sunroof" also refers to the panoramic sliding sunroof.

Problem	Possible causes/consequences and ▶ Solutions
The sliding sunroof cannot be closed and you cannot see the cause.	⚠ **WARNING** Risk of entrapment by closing the sliding sunroof again If you close the sliding sunroof again immediately after it has been blocked or reset, the sliding sunroof closes with increased or maximum force. The reversing feature is then not active. Parts of the body could be trapped in the closing area in the process. This poses an increased risk of injury or even fatal injury. ▶ Make sure that no parts of the body are in the closing area. ▶ Release the switch immediately if somebody becomes trapped. or

Problem	Possible causes/consequences and ▶ Solutions
	▶ Press the switch in any direction during the automatic closing process. The closing process is stopped. If the sliding sunroof is obstructed during closing and reopens again slightly: ▶ Immediately after automatic reversing, pull and hold the button down again to the point of resistance until the sliding sunroof is closed. The sliding sunroof is closed with increased force. If the sliding sunroof is obstructed again and reopens again slightly: ▶ Repeat the previous step. The sliding sunroof is closed again with increased force.
Vehicles without a panoramic sliding sunroof: the sliding sunroof does not operate smoothly.	▶ Raise the sliding sunroof fully at the rear. ▶ Press the button for another second. ▶ Use automatic operation to fully raise and then close the sliding sunroof.
Vehicles with a panoramic sliding sunroof: the sliding sunroof or the roller sunblind does not operate smoothly.	▶ Pull the button down repeatedly to the point of resistance until the sliding sunroof is fully closed. ▶ Pull the button for another second. ▶ Pull and hold the button down until the roller sunblind is completely closed. ▶ Pull the button for another second. ▶ Use automatic operation to fully open and then close the sliding sunroof.

Anti-theft protection

Immobiliser

The immobiliser prevents your vehicle from being started without the correct key.

The immobiliser is automatically activated when the ignition is switched off and deactivated when the ignition is switched on.

ATA (Anti-Theft Alarm system)

Function of the ATA system (anti-theft alarm system)

If the ATA system is primed, a visual and audible alarm is triggered in the following situations:

- A door is opened.
- The tailgate is opened.
- The bonnet is opened.
- Interior protection is triggered. (→ page 85)
- Tow-away protection is triggered. (→ page 85)

The ATA system is primed automatically after approximately 10 seconds:

- After locking the vehicle with the key.
- After locking the vehicle using KEYLESS-GO.

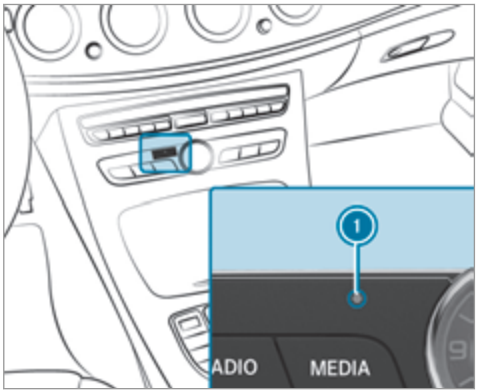

When the ATA system is primed, indicator lamp 1 flashes.

The ATA system is automatically deactivated:

- After unlocking the vehicle with the key.
- After pressing the start/stop button with the key inside the vehicle.
- After unlocking the vehicle using KEYLESS-GO.

ⓘ When the Mercedes-Benz emergency call system is active and the alarm stays on for more than 30 seconds, a message is automatically sent to the Customer Assistance Centre (→ page 281).

Deactivating the ATA (anti-theft alarm system) alarm

▶ Press the [🔓], [🔒] or [🚨] button on the key.

or

▶ Press the start/stop button (the SmartKey is inside the vehicle).

Stopping the alarm using KEYLESS-GO

▶ Grasp the outside door handle (with the key outside the vehicle).

Tow-away protection

An audible and visual alarm is triggered if your vehicle's angle of inclination is altered while tow-away protection is primed.

Tow-away protection is automatically primed after about 60 seconds:

- After locking the vehicle with the key.
- After locking the vehicle using KEYLESS-GO.

Tow-away protection is only primed when the following components are closed:

- Doors
- Tailgate

Tow-away protection is automatically deactivated:

- After pressing the [🔓] or [🔓] button on the key
- After pressing the start/stop button with the key inside the vehicle.
- After unlocking the vehicle using KEYLESS-GO.
- When using HANDS-FREE ACCESS.

Priming/deactivating tow-away protection

Multimedia system:

→ Vehicle ▸▸ Vehicle settings ▸▸ Tow-away protection

▶ Activate or deactivate the function.

Interior protection

When interior protection is primed, a visual and audible alarm is triggered if movement is detected in the vehicle interior.

Interior protection is primed automatically after approximately 10 seconds:

- After locking the vehicle with the key.
- After locking the vehicle using KEYLESS-GO.

Interior protection is only primed when the following components are closed:

- Doors
- Tailgate

Interior protection is automatically deactivated:

- After pressing the [🔓] or [🔓] button on the key
- After pressing the start/stop button with the key inside the vehicle.
- After unlocking the vehicle using KEYLESS-GO.
- When using HANDS-FREE ACCESS.

The following situations can lead to a false alarm:

- By moveable objects such as mascots in the vehicle interior.
- When the side window is open.
- When the sliding sunroof is open.
- When the panoramic sliding sunroof is open.

Priming/deactivating interior protection

Multimedia system:

→ Vehicle ▸▸ Vehicle settings ▸▸ Interior motion sensor

▶ Activate or deactivate the function.

Correct driver's seat position

⚠ **WARNING** Risk of injury through adjusting vehicle settings while the vehicle is in motion

You could lose control of the vehicle in the following situations:

- if you adjust the driver's seat, the head restraints, the steering wheel or the mirror while the vehicle is in motion
- if you fasten your seat belt while the vehicle is in motion

▶ Before starting the engine: adjust the driver's seat, the head restraints, the steering wheel or the mirror and fasten your seat belt.

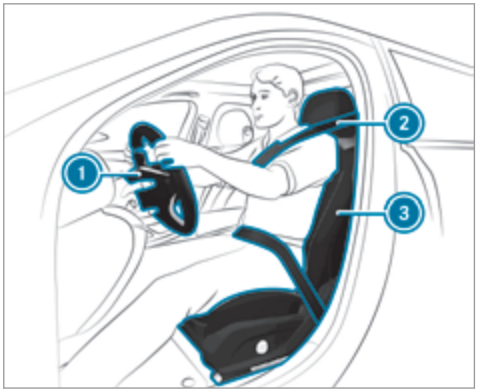

Observe the following when adjusting steering wheel ①, seat belt ② and driver's seat ③:

- you are as far away from the driver's airbag as possible
- you are sitting in a normal upright position
- your thighs are slightly supported by the seat cushion
- your legs are not entirely stretched and you can depress the pedals properly
- the back of your head is supported at eye level by the centre of the head restraint
- you can hold the steering wheel with your arms slightly bent
- you can move your legs freely
- you can see all the displays in the instrument cluster clearly
- you should have a good overview of traffic conditions
- the seat belt is pulled snugly against the body and must be routed across the centre of your shoulder and across your hips in the pelvic area

Seats

Adjusting the front seat manually and electrically (without Seat Comfort Package)

WARNING Risk of becoming trapped if the seats are adjusted by children

Children could become trapped if they adjust the seats, particularly when unattended.

- When leaving the vehicle, always take the key with you and lock the vehicle. This also applies to mobile phones if the "Digital Car Key in the smartphone" function is activated via the Mercedes connect me web App.
- Never leave children unattended in the vehicle.

The seats can be adjusted when the ignition is switched off.

WARNING Risk of becoming trapped when adjusting the seats

When you adjust a seat, you or other vehicle occupants could become trapped, e.g. on the seat guide rail.

- Make sure when adjusting a seat that no one has any body parts in the sweep of the seat.

Observe the safety notes on "Airbags" and "Children in the vehicle".

WARNING Risk of accident due to the driver's seat not being engaged

If the driver's seat is not engaged, it could move unexpectedly while the vehicle is in motion.

This could cause you to lose control of the vehicle.

- Always make sure that the driver's seat is engaged before starting the vehicle.

WARNING Risk of injury through adjusting vehicle settings while the vehicle is in motion

You could lose control of the vehicle in the following situations:

- if you adjust the driver's seat, the head restraints, the steering wheel or the mirror while the vehicle is in motion
- if you fasten your seat belt while the vehicle is in motion

- Before starting the engine: adjust the driver's seat, the head restraints, the steering wheel or the mirror and fasten your seat belt.

WARNING Risk of becoming trapped if the seat height is adjusted carelessly

If you adjust the seat height carelessly, you or other vehicle occupants could be trapped and thereby injured.

Children in particular could accidentally press the electrical seat adjustment buttons and become trapped.

- While moving the seats, make sure that hands or other body parts do not get under the lever assembly of the seat adjustment system.

WARNING Risk of injury due to head restraints which are not fitted or are adjusted incorrectly

If head restraints are not fitted or are adjusted incorrectly, they cannot provide protection as intended.

There is an increased risk of injury in the head and neck area, e.g. in the event of an accident or when braking.

- Always drive with the head restraints fitted.
- Before driving off, make sure for every vehicle occupant that the centre of the head restraint supports the back of the head at about eye level.

Do not interchange the head restraints of the front and rear seats. Otherwise, you cannot adjust the height and angle of the head restraints correctly.

Adjust the head restraint fore-and-aft position so that it is as close as possible to the back of your head.

WARNING Risk of injury due to an incorrect seat position

The seat belt does not offer the intended level of protection if you have not moved the seat backrest to an almost vertical position.

When braking or in the event of an accident, you could slide underneath the seat belt and sustain abdomen or neck injuries, for example. This poses an increased risk of injury or even fatal injury.

- Adjust the seat correctly before starting the journey.
- Always ensure that the seat backrest is in an almost vertical position and that the shoulder section of your seat belt is routed across the centre of your shoulder.

NOTE Damage to the seats when moving the seats back

The seats may be damaged by objects when moving the seats back.

- When moving the seats back, make sure that there are no objects in the footwell or under or behind the seats.

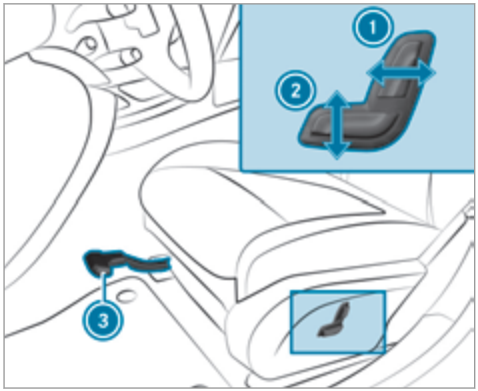

1 Seat backrest inclination
2 Seat height
3 Seat fore-and-aft position

▶ **To adjust the seat fore-and-aft position:** lift lever 3 and slide the seat into the desired position.

▶ Make sure that the seat is engaged.

Adjusting the front seat manually and electrically (with Seat Comfort Package)

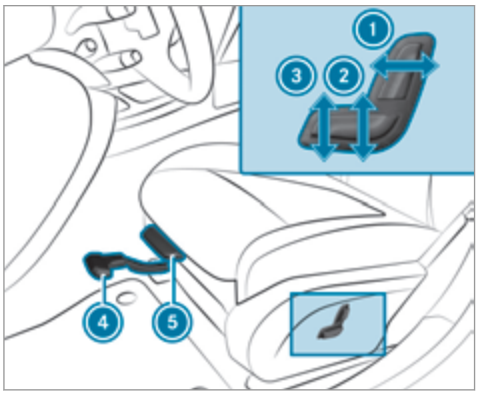

1 Seat backrest inclination
2 Seat height
3 Seat cushion inclination
4 Seat fore-and-aft position
5 Seat cushion length

▶ **To adjust the seat fore-and-aft position:** lift lever 4 and slide the seat forwards or backwards.

▶ Make sure that the seat is engaged.

▶ **To adjust the seat cushion length:** lift lever 5 and slide the front section of the seat cushion forwards or backwards.

Adjusting the seats electrically

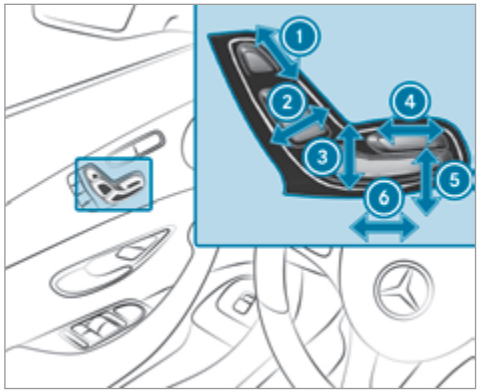

1. Head restraint height
2. Seat backrest inclination
3. Seat height
4. Seat cushion length
5. Seat cushion inclination
6. Seat fore-and-aft position

▶ Save the settings with the memory function (→ page 100).

Adjusting the front passenger seat from the driver's seat

Requirement:

- Power supply switched on

This function is only available on vehicles with an electrically adjustable front passenger seat.

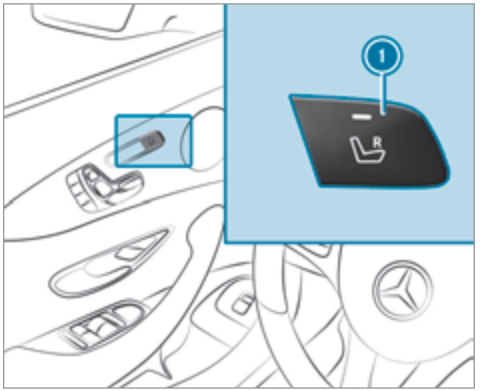

You can call up the following functions for the front passenger seat:

- Seat adjustment
- Seat heater
- Seat ventilation
- Memory function

- Press button (1) repeatedly until the indicator lamp in the button lights up.
  The front passenger seat is selected.
- Adjust the front passenger seat using the buttons in the door control panel on the driver's side.

Adjusting the 4-way lumbar support

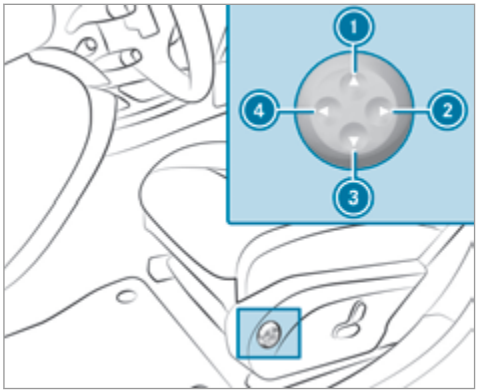

(1) To raise
(2) To soften
(3) To lower
(4) To harden

- Using buttons (1) to (4), adjust the contour of the backrest individually to suit your back.

Head restraints

Adjusting the front seat head restraints manually

WARNING Risk of injury through adjusting vehicle settings while the vehicle is in motion

You could lose control of the vehicle in the following situations:

- if you adjust the driver's seat, the head restraints, the steering wheel or the mirror while the vehicle is in motion
- if you fasten your seat belt while the vehicle is in motion

- Before starting the engine: adjust the driver's seat, the head restraints, the steering wheel or the mirror and fasten your seat belt.

WARNING Risk of injury due to head restraints which are not fitted or are adjusted incorrectly

If head restraints are not fitted or are adjusted incorrectly, they cannot provide protection as intended.

There is an increased risk of injury in the head and neck area, e.g. in the event of an accident or when braking.

- Always drive with the head restraints fitted.
- Before driving off, make sure for every vehicle occupant that the centre of the head restraint supports the back of the head at about eye level.

Do not interchange the head restraints of the front and rear seats. Otherwise, you cannot adjust the height and angle of the head restraints correctly.

Adjust the head restraint fore-and-aft position so that it is as close as possible to the back of your head.

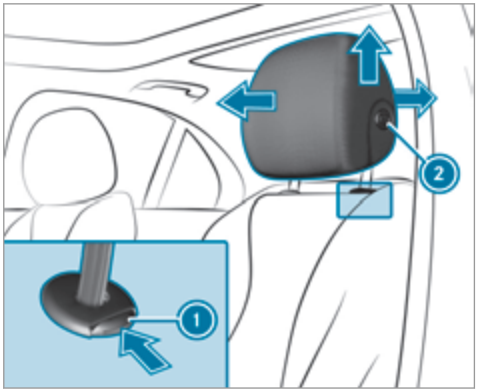

- **To raise:** pull the head restraint up.
- **To lower:** press release knob (1) in the direction of the arrow and push the head restraint down.

Adjusting the gap between the head restraint and the back of your head:

- **To move forwards:** pull the head restraint forwards.
- **To move backwards:** press release knob (2) and push the head restraint backwards.

Adjusting the front seat luxury head restraints

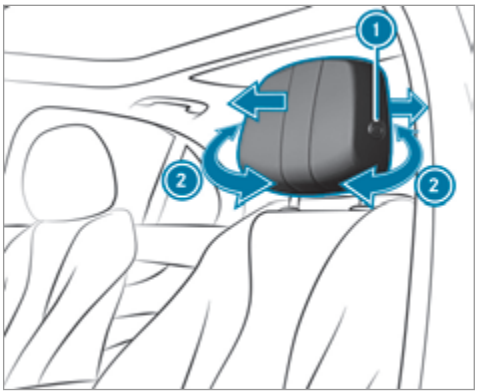

- **To adjust the side bolsters of the head restraint:** pull or push right or left-hand side bolster (2).

Adjusting the gap between the head restraint and the back of your head:

- **To move forwards:** pull the head restraint forwards.
- **To move backwards:** press release knob (1) and push the head restraint backwards.

Lowering the rear seat head restraints from the front

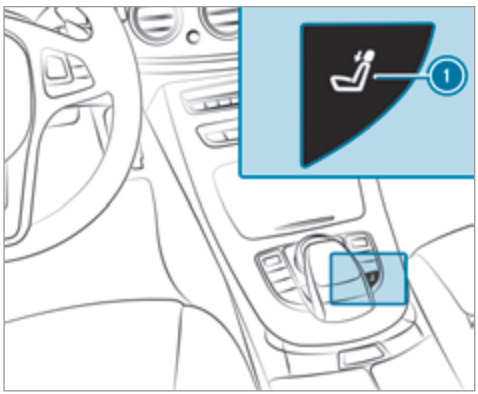

- Press button (1).

Adjusting the rear seat head restraints

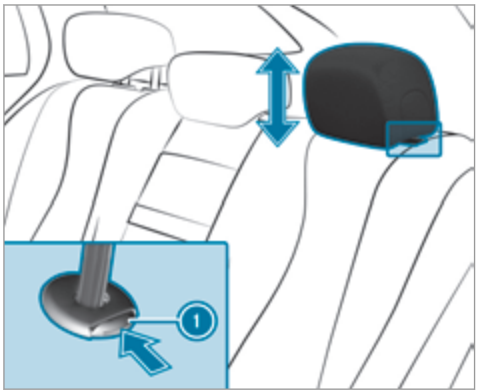

- **To raise:** pull the head restraint up.
- **To lower:** press release knob (1) in the direction of the arrow and push the head restraint down.

Only the outer head restraints can be removed.

- Release the rear seat backrest and fold it slightly forwards.
- **To remove:** pull the head restraint up to the stop.
- Push release knob (1) in the direction of the arrow and pull out the head restraint.
- **To fit:** insert the head restraint so that the notches on the bar are on the left when viewed in the direction of travel.
- Push the head restraint down until it engages.
- Fold the rear seat backrest back until it engages.

Switching the seat heater on/off

⚠ **WARNING** Risk of burns due to repeatedly switching on the seat heater

Repeatedly switching on the seat heater can cause the seat cushion and seat backrest padding to become very hot.

The health of persons with limited temperature sensitivity or a limited ability to react to excessively high temperatures may be affected or they may even suffer burn-like injuries.

- Do not repeatedly switch on the seat heater.

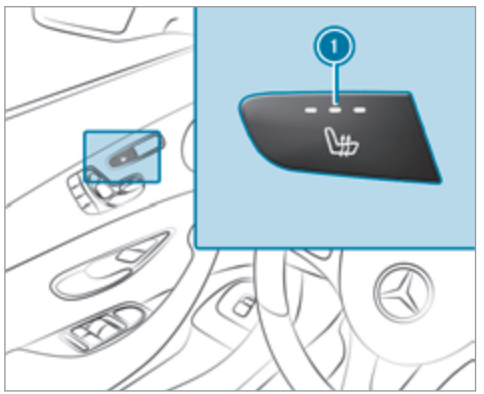

- **To switch on/increase the level:** press button (1) repeatedly until the desired heating level is set.
  Depending on the heating level, up to three indicator lamps light up.
- **To switch off/reduce the level:** press button (1) repeatedly until all the indicator lamps go out.

ⓘ The seat heater automatically switches down from the three heating levels after certain periods of time: 8, 10 and 20 minutes until the seat heater is switched off.

Switching the seat ventilation on/off

Requirement:

- power supply switched on

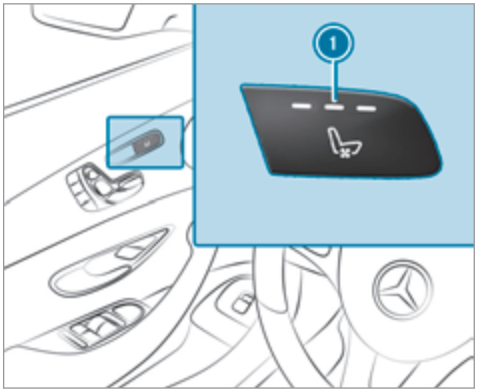

- **To switch on/increase the level/ decrease the level:** press button (1) repeatedly until the desired ventilation level is set.
  Depending on the ventilation level, up to three indicator lamps light up.
- **To switch off:** press button (1) repeatedly until all the indicator lamps go out.

Folding bench seat in the load compartment

Notes on the folding bench seat

⚠ **WARNING** Risk of injury when the seat backrest is not upright and locked in position

If the seat backrests of the rear bench seat are not locked in the upright position, the seat backrest of the folding bench seat may fold down while driving.

In this case, the seat belts may not perform their intended protective function.

▶ Make sure that the seat backrests of the rear bench seat are locked in the upright position.

Observe the notes on "Seat belts" (→ page 31), "Head restraints" (→ page 91) and "Children in the vehicle" (→ page 41).

The folding bench seat is only approved for use with child seats designed for children up to six years old (→ page 54).

A switch to open the tailgate from the folding bench seat is located on the wheel arch, on the right-hand side when viewed in the direction of travel.

You can obtain information on child restraint systems on the folding bench seat from any Mercedes-Benz service centre.

The folding bench seat may only be used when the combined luggage cover and net is installed.

Folding out the folding bench seat

Requirements:

- The seat backrests of the rear bench seat are locked in the upright position.
- The handle of the combined luggage cover and net has been moved up and, to improve the rear view, the upper part of the plate has been folded down.



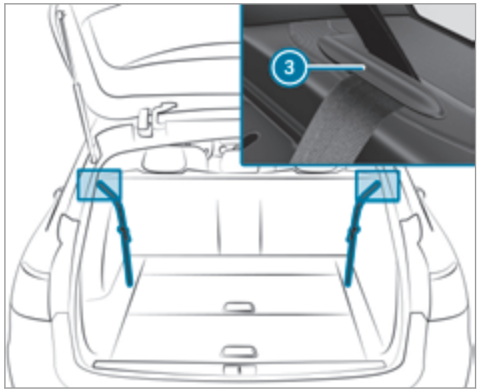

- Pull release handle (1) and fold the seat backrest of the folding bench seat upwards.
- Hook the seat belts into retainers (3).
- Secure the seat belt buckles in the back of the seat backrest.
- Pull release (2) and fold the seat cushion of the folding bench seat into the seat position.
- Push down the seat cushion until the seat backrest engages fully.
- Fold the head restraints upwards.

Fitting and removing the seat cushion

You must remove the seat cushion on the folding bench seat beforehand if you wish to lift the load compartment floor in the event of a flat tyre, for example.

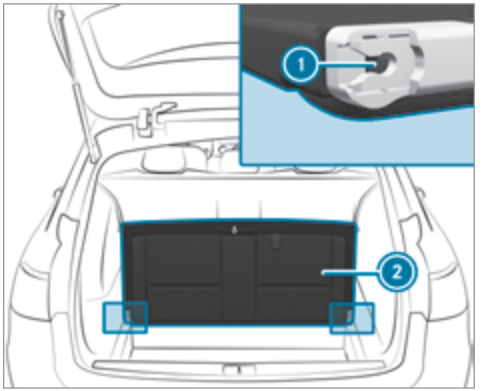



- **To remove:** fold seat cushion (2) vertically upwards and remove it from seat cushion guide (1).
- **To fit:** push seat cushion (2) into seat cushion guide (1) from the rear (3).
- Fold seat cushion (2) back into its starting position (4) until it engages.

Folding back the folding bench seat

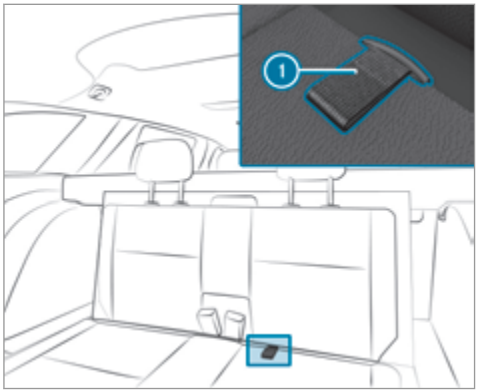

- Pull the seat cushion upwards by tab (1) and fold it back into its starting position until it engages.

! NOTE Damage to the folding bench seat when folding back

The folding bench seat may be damaged when it is folded back.

- Fully insert the head restraints into the guides.
- Make sure that the seat belt buckles engages in their guides.

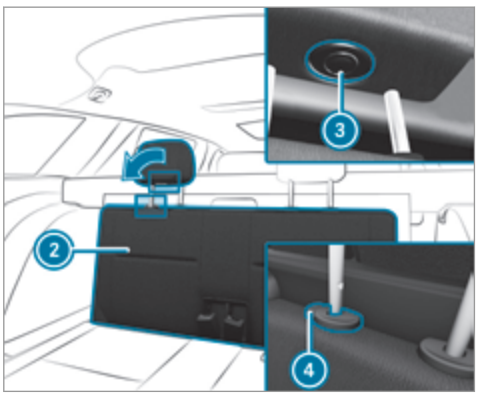

- ▶ Press release knob ③ and fold the head restraints down.
- ▶ Press release knob ④ and push the head restraints all the way in.
- ▶ Fold back seat backrest ② of the folding bench seat into its starting position.

Steering wheel

Adjusting the steering wheel manually

⚠ **WARNING** Risk of injury through adjusting vehicle settings while the vehicle is in motion

You could lose control of the vehicle in the following situations:

- if you adjust the driver's seat, the head restraints, the steering wheel or the mirror while the vehicle is in motion
- if you fasten your seat belt while the vehicle is in motion

▶ Before starting the engine: adjust the driver's seat, the head restraints, the steering wheel or the mirror and fasten your seat belt.

⚠ **WARNING** Risk of entrapment for children when adjusting the steering wheel

Children could injure themselves if they adjust the steering wheel.

- ▶ Never leave children unattended in the vehicle.
- ▶ When leaving the vehicle, always take the key with you and lock the vehicle. This also applies to mobile phones if the "Digital Car Key in the smartphone" function is activated via the Mercedes connect me web app.

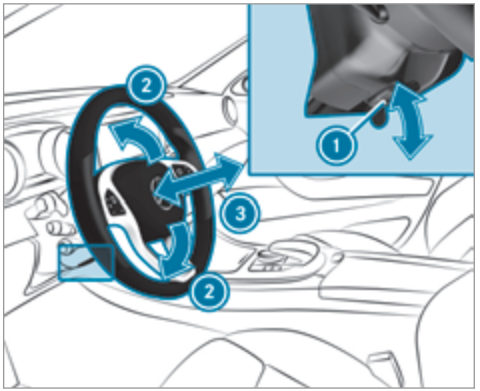

- ▶ **To unlock the steering column:** push release lever ① down completely.
- ▶ Adjust height ② and distance to steering wheel ③.
- ▶ **To lock the steering column:** push release lever ① up as far as it will go.
- ▶ Check and make sure that the steering column is locked by moving the steering wheel.

Adjusting the steering wheel electrically

The steering wheel can be adjusted when the ignition is switched off.

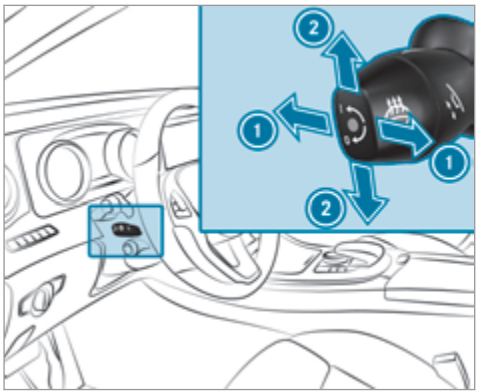

1 Adjusts the distance to the steering wheel
2 Adjusts the height

▶ Save the settings with the memory function.

Switching the steering wheel heater on/off

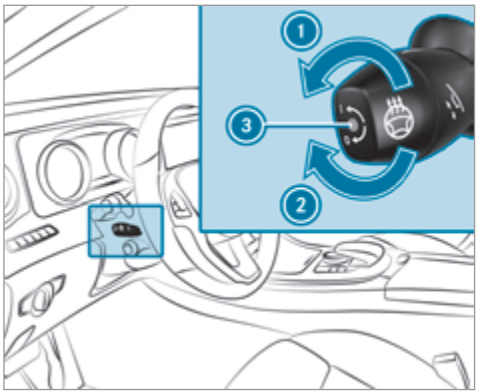

1 To switch on
2 To switch off
3 Indicator lamp

Easy entry and exit feature

How the easy entry and exit feature operates

⚠ **WARNING** Risk of accident when pulling away during the adjustment process of the easy exit feature

- If you pull away while the easy entry and exit feature is making adjustments, you could lose control of the vehicle.

▶ Always wait until the adjustment process is complete before pulling away.

⚠ **WARNING** Risk of becoming trapped while adjusting the easy entry and exit feature

When the easy entry and exit feature adjusts the steering wheel, you and other vehicle occupants – particularly children – could become trapped.

▶ During the adjustment process of the easy entry and exit feature, make sure

that no one has any body parts in the sweep of the steering wheel.

- ▶ Move the adjustment lever of the steering wheel if there is a risk of becoming trapped by the steering wheel. The adjustment process is stopped.
- ▶ Never leave children unattended in the vehicle.
- ▶ When leaving the vehicle, always take the key with you and lock the vehicle. This also applies to mobile phones if the "Digital Car Key in the smartphone" function is activated via the Mercedes connect me web App.

The easy entry and exit feature makes getting in and out of your vehicle easier.

If the easy entry and exit feature is active, the steering wheel will move upwards in the following situations:

- you switch the ignition off
- you open the driver's door when the ignition is switched on

The steering wheel moves back to the last drive position in the following cases:

- you switch the ignition on when the driver's door is closed
- you close the driver's door when the ignition is switched on

The last drive position of the steering wheel is stored:

- when you switch off the ignition
- using the last setting stored using the memory function

If you press one of the memory function position buttons, the adjustment process is stopped.

The crash-responsive exit aid only functions when the easy entry and exit feature is active.

Setting the easy entry and exit feature

Multimedia system:

→ Vehicle ▸▸ Vehicle settings ▸▸ Easy Entry/Exit

▶ Activate ☑ or deactivate ☐ the function.

Using the memory function

⚠ **WARNING** Risk of an accident if memory function is used while driving

If you use the memory function on the driver's side while driving, you could lose control of the vehicle as a result of the adjustments being made.

- ▶ Only use the memory function on the driver's side when the vehicle is stationary.

⚠ **WARNING** Risk of entrapment when setting the seat with the memory function

If you use the memory function to set the seat or the steering wheel, you and other vehicle occupants, especially children, could be entrapped. – –

- ▶ During the setting procedure of the memory function, ensure that no body parts are in the sweep of the seat or the steering wheel.

- If somebody becomes trapped, immediately release the memory function position button.
The adjustment process is stopped.

WARNING Risk of entrapment if the memory function is activated by children

Children could become trapped if they activate the memory function, particularly when unattended.

- Never leave children unattended in the vehicle.
- When leaving the vehicle, always take the key with you and lock the vehicle. This also applies to mobile phones if the "Digital Car Key in the smartphone" function is activated via the Mercedes connect me web app.

The memory function can be used when the ignition is switched off.
Seat comfort positions for up to three people can be stored and called up using the memory function.

The following systems can be set using the memory function:

- Seat, backrest and head restraint
- Steering wheel
- Outside mirrors
- Head-up Display

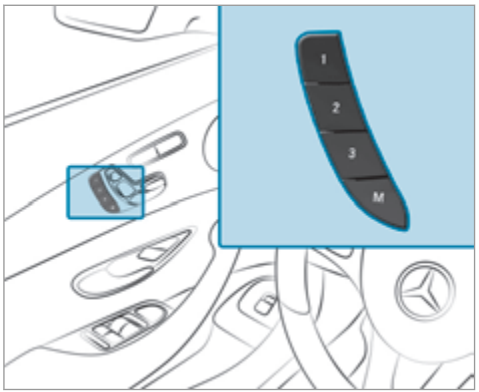

- **To save:** set the seat, the steering wheel, the Head-up Display and the outside mirror to the desired position.
- Press the memory button M together with one of the storage position buttons 1, 2 or 3. An acknowledgement tone sounds. The settings are stored.
- **To call up:** press and hold button 1, 2 or 3 until all the seat comfort systems are in the stored position.

Stowage areas

Notes on loading the vehicle

WARNING Risk of exhaust gas poisoning

Combustion engines emit poisonous exhaust gases such as carbon monoxide. Exhaust gases can enter the vehicle interior if the tailgate is open when the engine is running, especially if the vehicle is in motion.

- Always switch off the engine before opening the tailgate.

- Never drive with the tailgate open.

⚠ WARNING Risk of injury from unsecured items in the vehicle

If objects, luggage or loads are not secured or not secured sufficiently, they could slip, tip over or be thrown around and thereby hit vehicle occupants.

There is a risk of injury, particularly in the event of sudden braking or a sudden change in direction.

- Always stow objects in such a way that they cannot be thrown around.
- Before the journey, secure objects, luggage or loads against slipping or tipping over.

⚠ WARNING Risk of injury due to objects being stowed incorrectly

If objects in the vehicle interior are stowed incorrectly, they can slide or be thrown around and hit vehicle occupants. In addition, cup holders, open stowage spaces and mobile phone brackets cannot always retain all objects they contain.

There is a risk of injury, particularly in the event of sudden braking or a sudden change in direction.

- Always stow objects so that they cannot be thrown around in such situations.
- Always make sure that objects do not protrude from stowage spaces, luggage nets or stowage nets.
- Close the lockable stowage spaces before starting a journey.
- Stow and secure objects that are heavy, hard, pointed, sharp-edged, fragile or too large in the load compartment.

⚠ WARNING Risk of burns from tailpipes and tailpipe trim

The tailpipe and tailpipe trim can become very hot. If you come into contact with these parts of the vehicle, you could burn yourself.

- Always be particularly careful around the tailpipe and the tailpipe trim.
- Allow the vehicle parts to cool down before you touch them.

The handling characteristics of your vehicle are dependent on the distribution of the load within the vehicle. You should bear the following in mind when loading the vehicle:

- never exceed the maximum permissible gross mass or the permissible axle loads for the vehicle (including occupants).
- the load must not protrude above the upper edge of the seat backrests.
- when transporting objects in the load compartment, the combined luggage cover and net must always be installed (load compartment cover and safety net).
- always place the load behind unoccupied seats if possible.
- secure the load using the tie-down eyes and distribute the load evenly.

Interior stowage compartments

Overview of the front stowage compartments

Observe the notes on loading the vehicle (→ page 101).

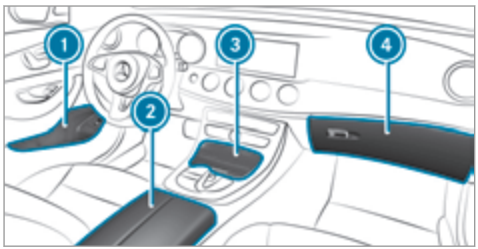

1. Stowage compartment in the doors
2. Stowage/telephone compartment in the armrest with multimedia connections and stowage compartment, e.g. for an MP3 player
3. Stowage compartment in the front centre console with a USB port (depending on the vehicle's equipment)
4. Glove box

Locking/unlocking the glove box

Observe the notes on loading the vehicle (→ page 101).

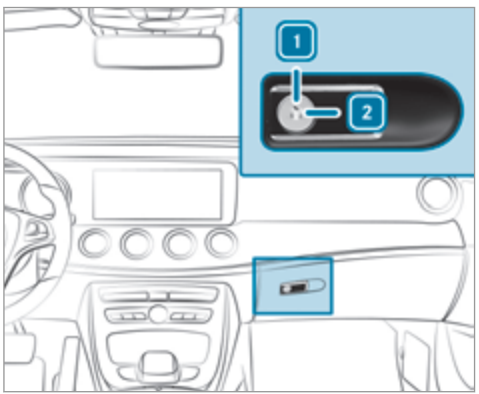

▶ Turn the emergency key a quarter turn clockwise 2 (to lock) or anti-clockwise 1 (to unlock).

Opening the spectacles compartment

Observe the notes on loading the vehicle (→ page 101).

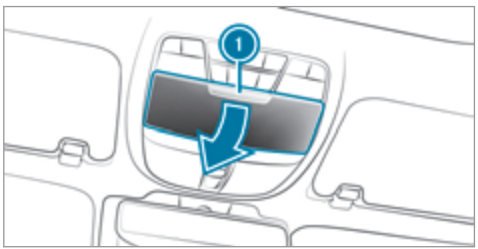

▶ **To open:** press button 1.

Opening the stowage compartment in the rear armrest

Observe the notes on loading the vehicle (→ page 101).

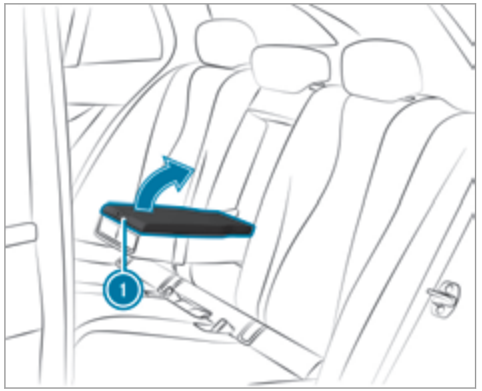

▶ **To open:** press release catch (1) and swing the cover of the armrest upwards.

Through-loading feature in the rear bench seat

Folding the rear seat backrest forwards

⚠ **WARNING** Risk of injury if the rear bench seat/rear seat and seat backrest are not engaged

If the rear bench seat/rear seat and seat backrest are not engaged they could fold forwards, e.g. when braking suddenly or in the event of an accident.

- If this is the case, the vehicle occupant would be forced into the seat belt by the rear bench seat/rear seat or by the seat backrest. The seat belt cannot protect as intended and could result in additional injury.
- Objects or loads in the boot/load compartment cannot be restrained by the seat backrest.

▶ Make sure that the seat backrest and the rear bench seat/rear seat are engaged before every trip.

If the seat backrest is not engaged and locked, this will be shown in the multifunction display in the instrument cluster.

The centre and outer seat backrests can be folded forwards separately.

The right outer seat backrest can only be folded forwards together with the centre seat backrest.

The outer seat backrests are electrically unlocked with the release handles in either the load compartment or beside the seat backrests.

▶ Fully insert the rear seat backrest head restraints.

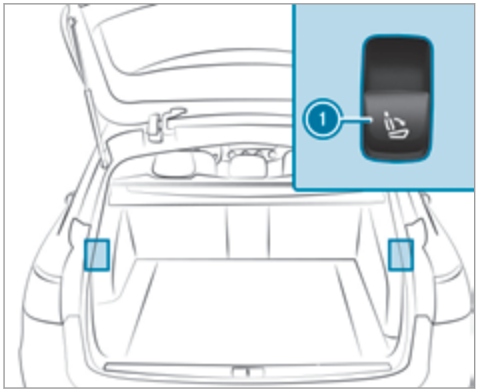

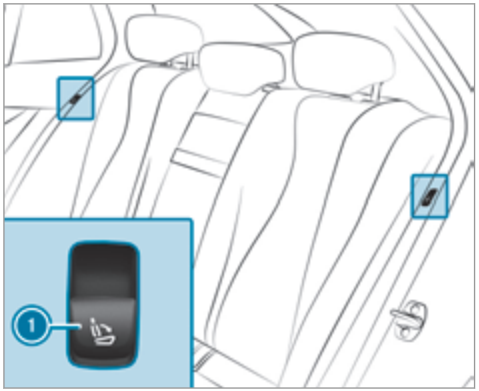

- **Left and right and seat backrests:** press right or left button (1).
  The corresponding seat backrest folds forwards.

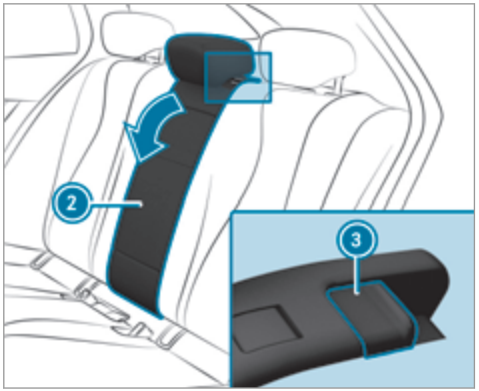

- **Centre seat backrest:** pull seat backrest (2) release (3) forwards.
- Fold seat backrest (2) forwards.

Folding the rear seat backrest back

! NOTE Damage to the seat belt

The seat belt could become trapped and thus damaged when folding back the seat backrest.

- Make sure that the seat belt is not trapped when folding back the seat backrest.

If the seat backrest is not engaged and locked, this will be shown in the multifunction display in the instrument cluster.

- Move the driver's or front passenger seat forwards, if necessary.

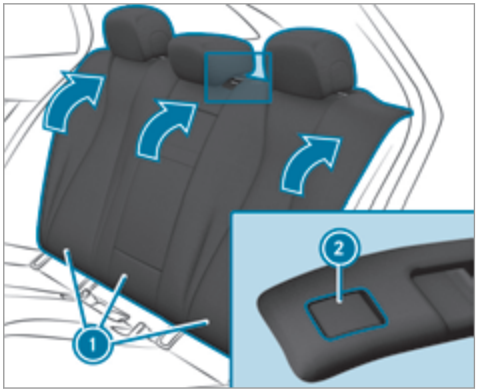

- Fold corresponding seat backrest (1) back until it engages.
  Left and right seat backrests: if the seat backrest is not correctly engaged, this will be shown in the multifunction display in the instrument cluster.
  Centre seat backrest: if the seat backrest is not correctly engaged, red lock verification indicator (2) will be visible.

Locking the centre rear seat backrest

Lock the centre seat backrest if you want to secure the load compartment from unauthorised access. The centre seat backrest can then only be folded forwards together with the left seat backrest.

Both seat backrests must be engaged and joined together.

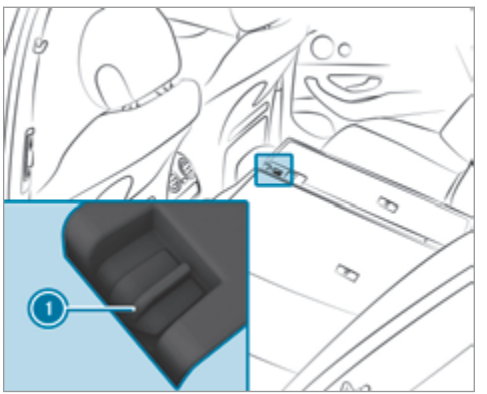

- Fold the centre and left seat backrest forwards.
- **To lock:** slide catch (1) upwards.
  The release mechanism of the centre seat backrest is locked.
- **To unlock:** slide catch (1) downwards.

Adjusting the angle of the rear seat backrests (cargo position)

To enlarge the load compartment, you can adjust the seat backrests so that they are 10 degrees steeper (cargo position).

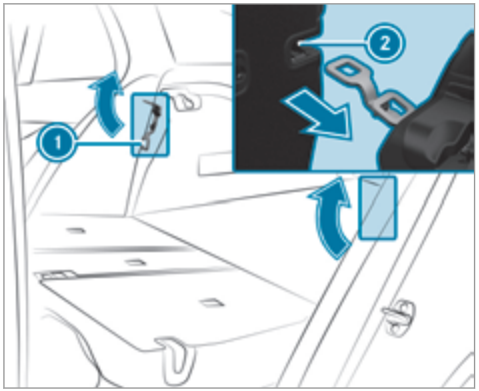

- Fold the seat backrest forwards (→ page 104).
- Move bar (1) in the direction of the arrow.
- Push seat backrest (2) back to bar (1) until the backrest engages.

Securing the ski/snowboard bag in the load compartment

WARNING Risk of injury due to using the through-load ski bag incorrectly

The through-load ski bag in conjunction with the lashing straps cannot restrain any objects other than skis.

Vehicle occupants could be struck in the event of sudden braking or an accident in the following cases:

- If you transport other heavy or sharp-edged objects in the through-load ski bag
- If you do not secure the through-load ski bag with the lashing straps

- Only store skis in the through-load ski bag.
- Always secure the through-load ski bag with the lashing straps so that it cannot move around.

A maximum of four pairs of skis or two snowboards may be transported in the ski/snowboard bag.

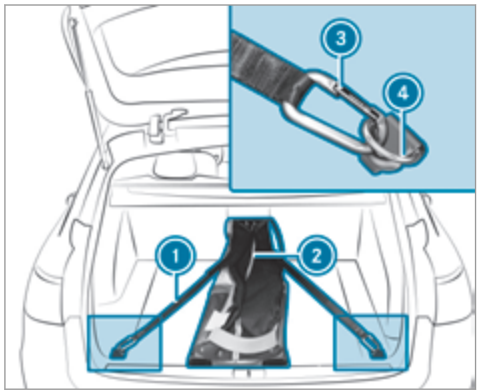

- ▶ Fold the centre rear seat backrest forwards.
- ▶ Slide the bag between the outer seat backrests into the rear.
- ▶ Undo zip (2), place the skis or snowboards inside the bag and close it.
- ▶ Pull tensioning strap tight by the loose end in order to secure the skis or snowboards inside the ski/snowboard bag.
- ▶ Attach lashing strap (1) onto hook (3) in a crosswise pattern with the fastener facing upwards in tie-down eye (4).

Load compartment cover with safety net (combined luggage cover and net)

Notes on the load compartment cover

⚠ WARNING Risk of injury due to poorly secured objects

On its own, the load compartment cover cannot secure or restrain heavy objects, items of luggage and heavy loads.

You could be hit by an unsecured load during sudden changes in direction, braking or in the event of an accident. There is an increased risk of injury or even fatal injury.

- ▶ Always stow objects in such a way that they cannot be thrown around.
- ▶ Secure objects, luggage or loads against slipping or tipping over, e.g. by using lashing material, even if you are using the load compartment cover.

! NOTE Damage to the load compartment cover when loading the vehicle

The load compartment cover may be damaged when loading the vehicle.

- ▶ Do not place any objects above the lower edge of the side windows or on the load compartment cover.

The load compartment cover and the safety net form the combined luggage cover and net.

When the load compartment cover is clipped in, no objects in the load compartment should obstruct the downwards movement of the cover when the tailgate is closed. The load compartment cover will otherwise be raised again automatically.

Extending/retracting the load compartment cover

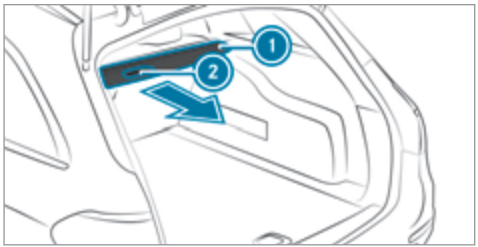

▶ **To extend:** pull load compartment cover (1) back by grab handle (2) and clip it into the brackets on the left and right.

The load compartment cover raises automatically when the tailgate is opened and lowers again when the tailgate is closed.

▶ **To retract:** unhook load compartment cover (1) from the brackets on the left and right and guide it forwards by grab handle (2) until it is fully retracted.

The contour plate of the extended load compartment cover can be used in three positions:

- folded up by 45° (loading position)
- horizontal position (driving position)
- folded down and locked in place (rattle-free position when driving)

Installing/removing the combined luggage cover and net

Requirements:

- Remove from the load compartment or from the left-hand rear door if the seat backrests are folded forwards.
- The load compartment cover and safety net are retracted.

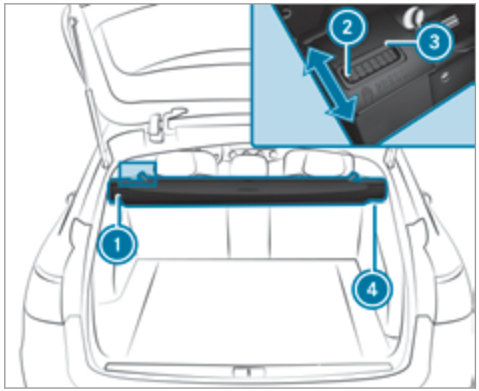

▶ **To remove:** press button (2).

▶ Fold the combined luggage cover and net backwards with the seat backrest folded up.

▶ First, detach the combined luggage cover and net from left-hand catch (1) and then remove it from right-hand bracket (4).

- ▶ **To install:** slide the combined luggage cover and net into right-hand bracket (4) up to the stop.
- ▶ Place the combined luggage cover and net into the left-hand bracket and slide it into catch (1) until the combined luggage cover and net engages audibly.
  Red lock verification indicator (3) must no longer be visible.

Attaching the combined luggage cover and net to the rear seat backrest

! NOTE Damage to the combined luggage cover and net when attaching it to the seat backrest

When the combined luggage cover and net is attached to the seat backrest, it may be damaged when the seat backrest is folded back.

▶ Do not fold the seat backrests back.

Requirement:

- The seat backrests are folded forwards.

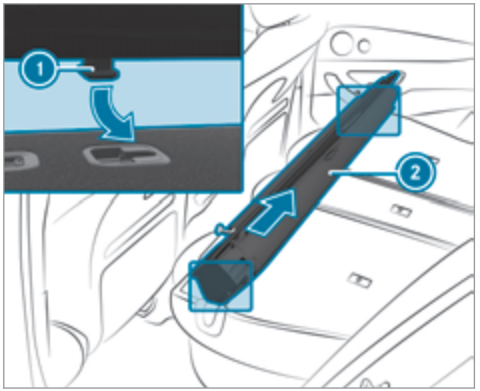

▶ Insert combined luggage cover and net (2) into both guides (1) and push it up to the stop in the direction of the arrow.

To disassemble the combined luggage cover and net, follow the instructions in reverse order.

Attaching the safety net

⚠ WARNING Risk of injury due to poorly secured objects

On its own, the safety net cannot secure or restrain heavy objects, items of luggage and heavy loads.

You could be hit by an unsecured load during sudden changes in direction, braking or in the event of an accident. There is an increased risk of injury or even fatal injury.

- ▶ Always stow objects in such a way that they cannot be thrown around.
- ▶ Secure objects, luggage or loads against slipping or tipping over, e.g. by using lashing material, even if you are using the safety net.

For safety reasons, always use a safety net when transporting a load.

Damaged safety nets can no longer fulfil their protective functions and must be replaced. Visit a qualified specialist workshop.

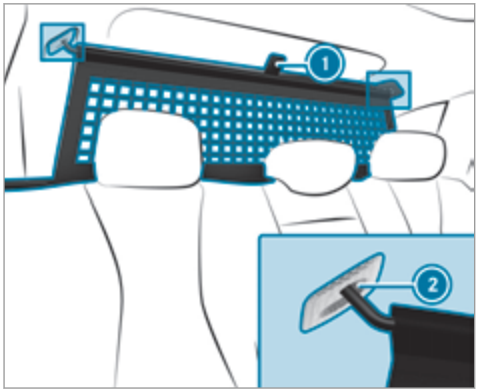

- **Safety net without load compartment enlargement:** pull the safety net back from the rear bench seat by tab (1).
- Hook the safety net first on the left, then on the right into eyelets (2).

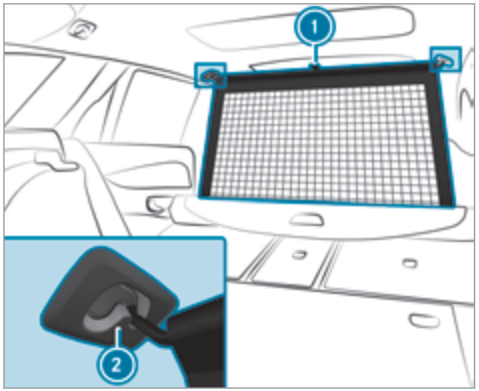

- **Safety net with load compartment enlargement:** guide the safety net up by tab (1) and hook it into eyelets (2).

Overview of the tie-down eyes

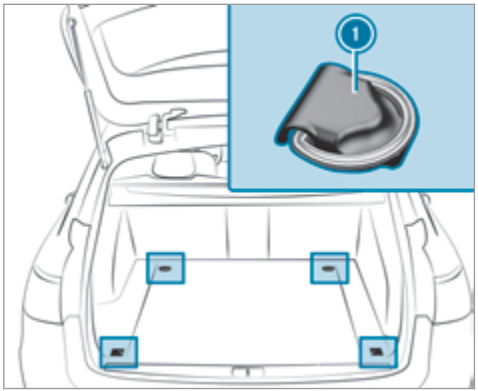

(1) Tie-down eyes

Related topic:

Loading guidelines (→ page 101).

Overview of bag hooks

⚠ WARNING Risk of injury when using bag hooks with heavy objects

The bag hooks cannot restrain heavy objects or items of luggage.

Objects or items of luggage could be thrown around and thereby hit vehicle occupants when braking or abruptly changing directions.

- Only hang light objects on the bag hooks.
- Never hang hard, sharp-edged or fragile objects on the bag hooks.

The bag hook can bear a maximum load of 3 kg. Do not use it to secure a load.

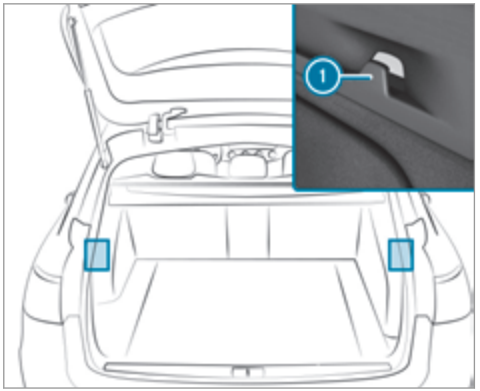

1 Bag hook

Related topic:

Loading guidelines (→ page 101).

EASY-PACK load-securing kit

Notes on the EASY-PACK load-securing kit

The EASY-PACK load-securing kit allows you to use your load compartment for a variety of purposes. The components are located under the load compartment floor.

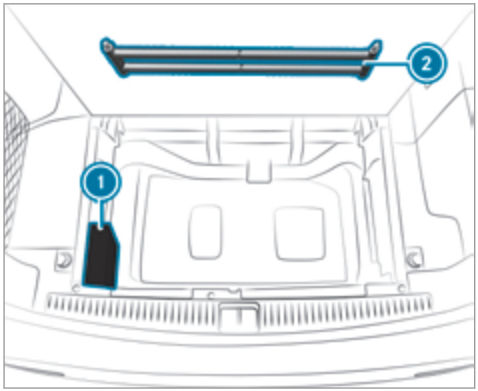

1 Bag containing the brackets and luggage holder
2 Telescopic rod

Inserting the brackets into the load rail

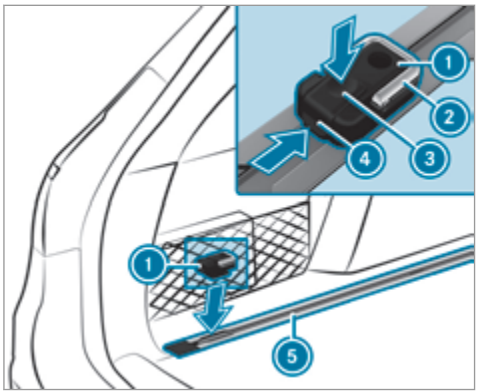

- Insert bracket 1 into the centre of load rail 5.
- Press release knob 3 and slide bracket 1 into the desired position in load rail 5.
- Let go of release knob 3.
- Press locking button 4.
  Bracket 1 is locked in load rail 5.
- If necessary, fold tie-down eye 2 upwards.

Tensioning the luggage holder

Requirements:

- The luggage holder is used to secure loads against the side wall of the load compartment to prevent them from moving around.
- Only secure loads with a maximum weight of 7 kg and which are small enough for the luggage holder to tightly and properly secure them.

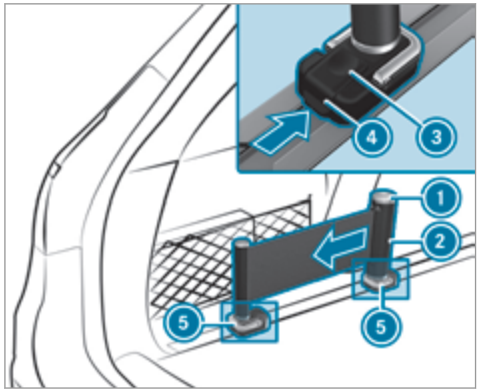

- **To install:** insert two brackets (5) into the left or right load rail.
- Press release knob (1) of luggage holder (2) and pull the strap out slightly.
- Insert luggage holder (2) into brackets (5) and, while doing so, press release knob (3) and slide the luggage holder downwards until it engages.
- Press release knob (1) of the luggage holder and pull the strap out in the direction of the arrow.
- Place the load between the strap and the load compartment side wall.
- Using one hand, press release knob (1) of the luggage holder.
- With your other hand, let the strap go slowly until the load is secured.
- Make sure that locking button (4) on brackets (5) is pressed.
  Brackets (5) are secured in place on the load rail.
- **To remove:** press release knob (3) on respective bracket (5) and remove luggage holder (2) by pulling upwards and out.

Tensioning the telescopic rod

Requirement:
The telescopic rod is used to secure loads against the rear seats to prevent them from moving around.

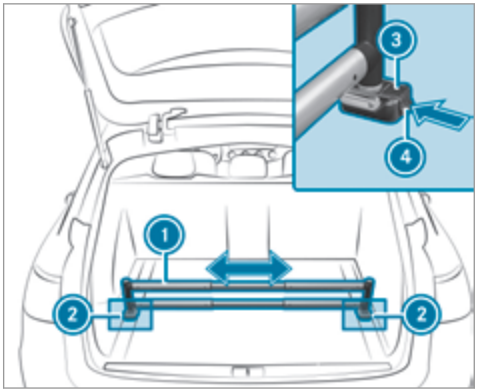

- **To install:** insert one bracket (2) into both the left and right load rails and slide it to the desired position.
- Insert telescopic rod (1) into brackets (2).
- When doing so, press release knob (3) and slide telescopic rod (1) down until it engages.

- Make sure that locking button (4) on brackets (2) is pressed.
  Brackets (2) are secured in place on the load rail.
- **To remove:** press release knob (3) on respective bracket (2) and remove telescopic rod (1) by pulling it upwards and out.

Opening the stowage space under the load compartment floor

WARNING Risk of injury due to an open load compartment floor

If you drive when the load compartment floor is open, objects could be thrown around and thereby strike vehicle occupants. There is a risk of injury, particularly in the event of sudden braking or a sudden change in direction.

- Always close the load compartment floor before a journey.

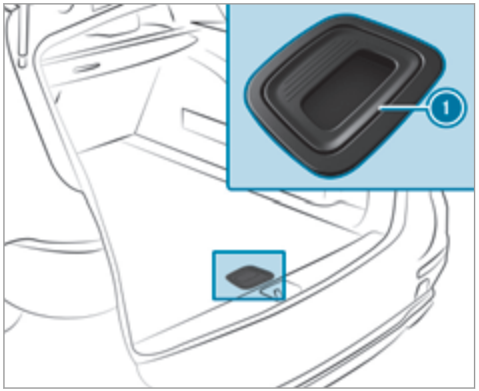

- **To open:** holding the ribbing, press handle (1) downwards.
- Lift the load compartment floor upwards by handle (1).
- Fold out the hook on the strap on the underside of the load compartment floor and hook it into the rain trough.
- **To close:** unhook the hook from the rain trough and fasten it to the bracket on the underside of the load compartment floor.
- Fold the load compartment floor downwards and then press handle (1) down until it engages.

Attaching the roof rack

WARNING Risk of injury by exceeding the maximum roof load

When you load the roof, the vehicle centre of gravity rises and the driving characteristics change.

If you exceed the maximum roof load, the driving characteristics, as well as the steering and braking, will be greatly impaired.

- Never exceed the maximum roof load and adjust your driving style.

You will find information on the maximum roof load in the "Technical data" section.

Requirements:

- Only use roof racks tested and approved by Mercedes-Benz.
- Make sure that you can raise the sliding sunroof fully and open the tailgate fully once the roof rack is fitted.
- The panoramic sliding sunroof cannot be opened if a roof rack is fitted. The panoramic sliding sunroof closes again automatically when it encounters resistance.

▶ Secure the roof rack to the roof railing.

▶ Observe the manufacturer's installation instructions.

Cup holders

Fitting or removing the cup holder in the centre console

⚠ **WARNING** - Risk of accident or injury when using the cup holder while the vehicle is in motion

The cup holder cannot hold a container secure while the vehicle is in motion.

If you use a cup holder while the vehicle is in motion, the container may be flung around and liquids could be spilled. The vehicle occupants may come into contact with the liquid and if it is hot, they could be scalded. You could be distracted from traffic conditions and you may lose control of the vehicle.

▶ Only use the cup holder when the vehicle is stationary.

▶ Only use the cup holder for containers of the right size.

▶ Always close the container, particularly if the liquid is hot.

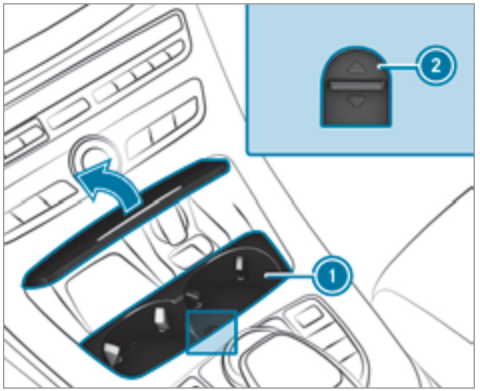

▶ **To remove:** slide catch (2) forwards and pull out cup holder (1).

▶ **To fit:** insert cup holder (1) and slide back catch (2).

ⓘ The rubber mat of the cup holder can be removed for cleaning, e.g. using clean, lukewarm water.

Fitting/removing the cup holder in the centre console (manual transmission)

⚠ **WARNING** - Risk of accident or injury when using the cup holder while the vehicle is in motion

The cup holder cannot hold a container secure while the vehicle is in motion.

If you use a cup holder while the vehicle is in motion, the container may be flung around and liquids could be spilled. The vehicle occupants may come into contact with the liquid and if it is hot, they could be scalded. You could be distracted from traffic conditions and you may lose control of the vehicle.

- Only use the cup holder when the vehicle is stationary.
- Only use the cup holder for containers of the right size.
- Always close the container, particularly if the liquid is hot.

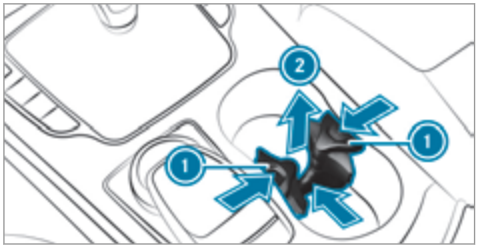

- **To remove:** slide both cup holder sections (1) inwards until they release.
- Slide the cup holder forwards and remove cup holder (2).

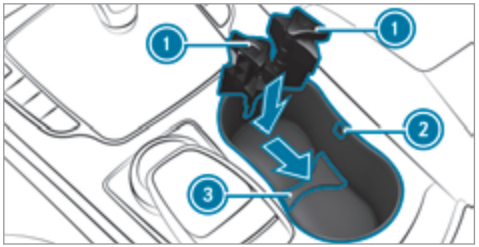

- **To fit:** insert the cup holder at the front and then slide it until it reaches edge (3). The wedge of the upper section of the cup holder must face upwards.
- Slide upper cup holder sections (1) outwards until both right and left sides (2) engage.

ⓘ The rubber mat of the cup holder can be removed for cleaning, e.g. using clean, lukewarm water.

Opening the cup holder in the rear armrest

NOTE Damage to the cup holder

When the rear armrest is folded back the cup holder could become damaged.

- Only fold the rear armrest back when the cup holder is closed.

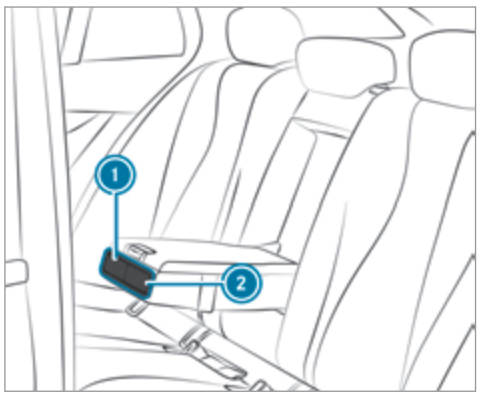

- **To open:** press on cup holder 1 or 2.
- **To fold in or out:** place or remove a container from cup holder 1 or 2.

Ashtray and cigarette lighter

Using the ashtray in the front centre console

NOTE Damage to the stowage compartment under the ashtray

The stowage compartment under the ashtray is not heat resistant and could be damaged if you rest lit cigarettes on it.

- Ensure that the ashtray is fully engaged.

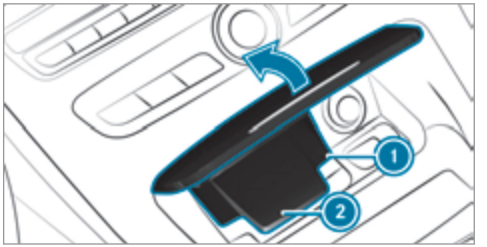

- **To open:** push the cover of the ashtray upwards on right 2 or left side.
- **To remove the insert:** push insert 1 forwards slightly and pull it upwards and out.
- **To refit the insert:** press insert 1 into the holder until it engages.

Using the rear ashtray

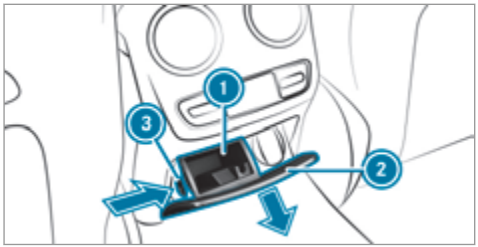

- **To open:** pull cover (2) out by its top handle edge.
- **To remove the insert:** push ribbing (3) from the left side and pull insert (1) upwards and out.
- **To fit the insert:** fit insert (1) from above and press down into the holder until it engages.

Using the cigarette lighter

WARNING - Risk of fire and injury from the hot cigarette lighter

You can burn yourself if you touch the hot heating element or the socket of the cigarette lighter.

In addition, flammable materials may ignite if:

- you drop the hot cigarette lighter
- a child holds the hot cigarette lighter to objects, for example

- Always hold the cigarette lighter by the knob.
- Always make sure that the cigarette lighter is out of reach of children.
- Never leave children unattended in the vehicle.

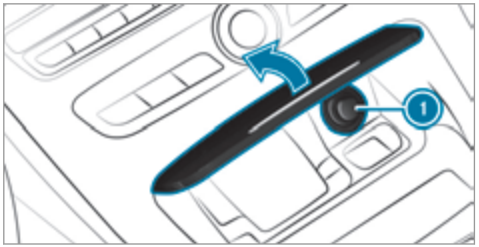

- Press in cigarette lighter (1).
  The cigarette lighter will pop out automatically when the heating element is red-hot.

Sockets

12 V socket in the front centre console

Requirements:

- Only connect devices up to a maximum of 180 Watt (15 A)
- if you have connected a device to the 12 V socket, leave the cover of the stowage compartment open

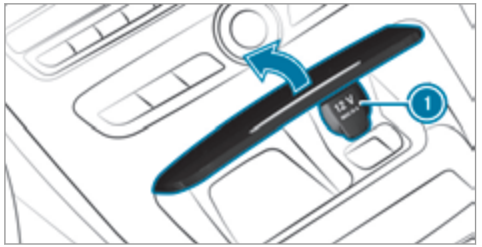

- ▶ Lift up cover (1) of the socket and insert the plug of the device.

Using the rear 12 V socket

Requirement:
only connect devices up to a maximum of 180 Watt (15 A)

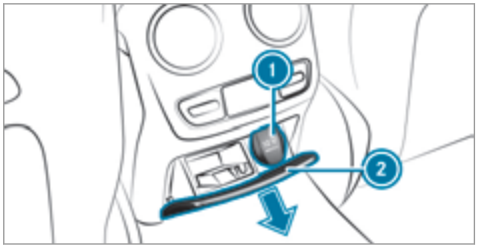

- ▶ Briefly press the trim of cover (2).
- ▶ Lift out cover (1) of the socket and insert the plug of the device.

Using the 230 V socket in the rear compartment

⚠ **DANGER** Risk of fatal injury due to damaged connecting cables or sockets

When a suitable device is connected, the 230 V power socket will be carrying a high voltage. You could receive an electric shock if the connecting cable or the 230 V power socket is pulled out of the trim or is damaged or wet.

- ▶ Use only connecting cables that are dry and free of damage.
- ▶ When the ignition is switched off, make sure that the 230 V power socket is dry.
- ▶ Immediately have the 230 V power socket checked or replaced at a qualified specialised workshop if it is damaged or has been pulled out of the trim.
- ▶ Never plug the connecting cable into a 230 V power socket that is damaged or has been pulled out of the trim.

⚠ **DANGER** Risk of fatal injury due to incorrect handling of the socket

You could receive an electric shock:

- if you reach into the socket.
- if you insert unsuitable devices or objects into the socket.

- ▶ Only connect suitable devices to the socket.

Requirements:

- Only connect devices with a suitable plug which conforms to the standards specific to the country you are in.
- Only connect devices up to a maximum of 150 watts.
- Do not use multiple socket outlets.

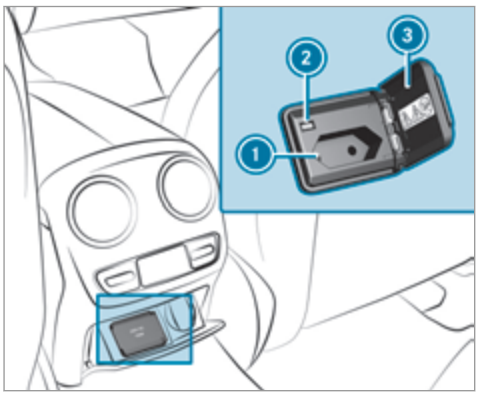

▶ Open flap (3).

▶ Insert the plug of the device into 230 V socket (1).
When the on-board electrical system voltage is sufficient, indicator lamp (2) lights up.

Using the 12 V socket in the load compartment

Requirement:
Only connect devices up to a maximum of 180 Watt (15 A)

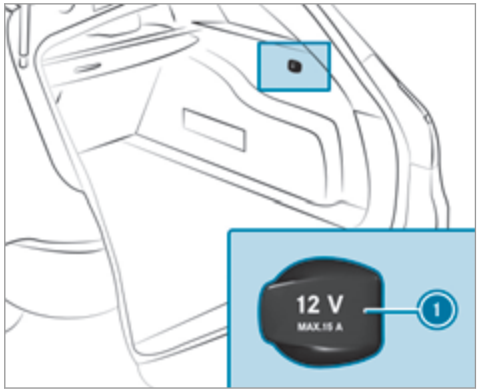

▶ Lift up cover (1) of the socket and insert the plug of the device.

Wireless charging of the mobile phone and connection with the exterior aerial

Notes on wireless charging of the mobile phone

⚠ WARNING Risk of injury due to objects being stowed incorrectly

If objects in the vehicle interior are stowed incorrectly, they can slide or be thrown around and hit vehicle occupants. In addition, cup holders, open stowage spaces and mobile phone receptacles cannot always retain all objects they contain.

There is a risk of injury, particularly in the event of sudden braking or a sudden change in direction.

- ▶ Always stow objects so that they cannot be thrown around in such situations.
- ▶ Always make sure that objects do not protrude from stowage spaces, luggage nets or stowage nets.
- ▶ Close the lockable stowage spaces before starting a journey.
- ▶ Always stow and secure heavy, hard, pointed, sharp-edged, fragile or bulky objects in the boot/load compartment.

Observe the notes on loading the vehicle.

⚠ WARNING Risk of fire from placing objects in the mobile phone stowage compartment

If you place objects in the mobile phone stowage compartment, they may heat up excessively and even catch fire.

- ▶ Do not place additional objects, especially those mode of metal, in the mobile phone stowage compartment.

! NOTE Damage to objects caused by placing them in the mobile phone stowage compartment

If you place objects in the mobile phone stowage compartment, these may be damaged by electromagnetic fields.

- ▶ Do not place credit cards, storage media or other objects sensitive to electromagnetic fields in the mobile phone stowage compartment.

! NOTE Damage to the mobile phone stowage compartment caused by liquids

If liquid is spilled in the mobile phone stowage compartment, the mobile phone stowage compartment may be damaged.

- ▶ Do not spill liquids into the mobile phone stowage compartment.

- Depending on the vehicle equipment, the mobile phone is connected to the vehicle's exterior aerial via the charging module.

- The charging function and wireless connection of the mobile phone to the vehicle's exterior aerial are only available if the ignition is switched on.
- Small mobile phones may not be able to be charged in every position of the mobile phone stowage compartment.
- Large mobile phones which do not rest flat in the mobile phone stowage compartment may not be able to be charged or connected with the vehicle's exterior aerial.
- The mobile phone may heat up during the charging process. The mobile phone can be cooled in the mobile phone stowage compartment when the air conditioning system is switched on. The cooling output in the mobile phone stowage compartment is highest when the controller in the glove box is closed.

Wireless charging of the mobile phone

Requirements:

- Your mobile phone must be suitable for wireless charging (Qi-compatible mobile phone).

  You can find a list of Qi-compatible mobile phones online at:

  http://www.mercedes-benz.com/connect
- To ensure more efficient charging and connection with the vehicle's exterior aerial, remove the protective cover from the mobile phone.
- If possible, use the mat when charging.

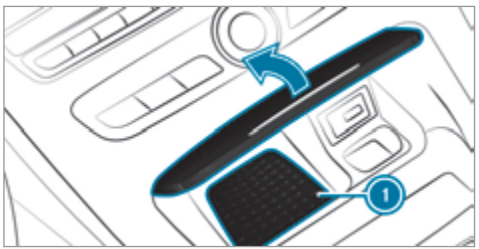

▶ Place the mobile phone as close to the centre of mat ① as possible with the display facing upwards.
The mobile phone is charged automatically, as is apparent from the way in which the mobile phone reacts and from the charging symbol in the multimedia system display.

Malfunctions during the charging process are shown in the multimedia system display.

ⓘ To clean, mat ① can be removed.

Fitting/removing floor mats

⚠ **WARNING** Risk of accident due to objects in the driver's footwell

Objects in the driver's footwell may impede pedal travel or block a depressed pedal.

This jeopardises the operating and road safety of the vehicle.

▶ Stow all objects in the vehicle securely so that they cannot get into the driver's footwell.

▶ Always fit the floor mats securely and as prescribed in order to ensure that there is always sufficient room for the pedals.

- Do not use loose floor mats and do not place floor mats on top of one another.

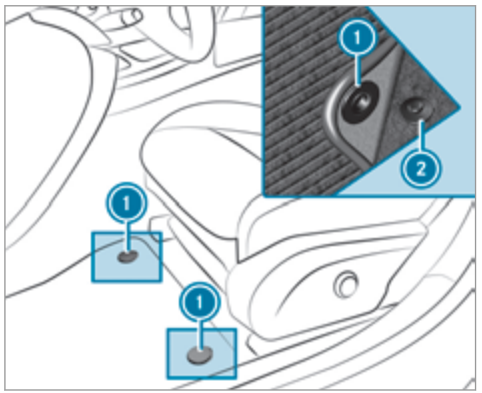

- **To fit:** press studs (1) onto holders (2).
- **To remove:** pull the floor mat off the holders (2).

Exterior lighting

Changing the lights when driving abroad

Vehicles with halogen or static LED headlamps: It is not necessary to change the headlamps. The legal requirements are also met in countries where people drive on the other side of the road.

Vehicles with Intelligent Light System: Before crossing the border into countries where they drive on the other side, it is necessary to set the headlamps to symmetrical dipped beam (→ page 132).

After changing the headlamps:

- Oncoming traffic is not dazzled.
- The edge of the road is not illuminated as far or as high.
- The "motorway mode" and "enhanced fog light functions" are not available.

The headlamps must be reset to asymmetrical dipped beam after returning from abroad.

Lighting systems and your responsibility

The various lighting systems of the vehicle are only aids. The driver of the vehicle is responsible for correct vehicle illumination in accordance with the prevailing light and visibility conditions, legal requirements and traffic situation.

Light switch

Operating the light switch

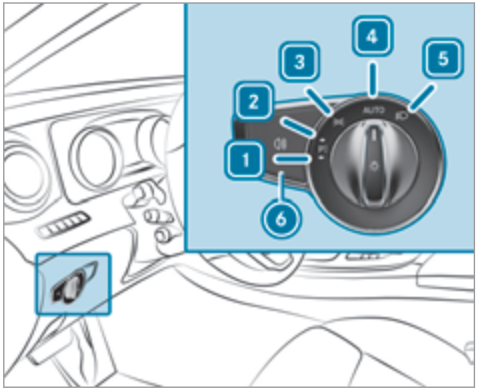

- 1 Left-hand parking lights
- 2 Right-hand parking lights
- 3 Standing lights and licence plate lighting

- 4 AUTO Automatic driving lights (preferred light switch position)
- 5 Dipped beam/main beam
- 6 Switches the rear fog light on or off

When dipped beam is activated, the indicator lamp for the standing lights is deactivated and replaced by the dipped beam indicator lamp.

Always park your vehicle safely and in a well-lit area, in accordance with the relevant legal stipulations.

NOTE Battery discharging by operating the standing lights

Operating the standing lights over a period of hours puts a strain on the battery.

- Where possible, switch on the right P or left P parking light.

In the case of severe battery discharging, the standing lights or parking lights are automatically switched off to facilitate a future engine start.

The exterior lighting (except standing and parking lights) switches off automatically when the driver's door is opened.

Automatic driving lights

The standing lights, dipped beam and daytime running lights are switched on automatically depending on the ignition status, whether the engine is running and on the light conditions.

WARNING Risk of accident when the dipped beam is switched off in poor visibility

When the light switch is set to AUTO, the dipped beam may not be switched on automatically if there is fog, snow or other causes of poor visibility such as spray.

- In such cases, turn the light switch to .

The automatic driving lights are only an aid. You are responsible for vehicle lighting.

Activating/deactivating the rear fog light

Requirement

The light switch is in the or AUTO position.

- Press button .

Please observe the country-specific laws on the use of rear fog lamps.

Adjusting the headlamp range (halogen headlamps without active suspension)

The headlamp range adjuster allows you to adjust the cone of light from the headlamps in relation to the vehicle's load condition.

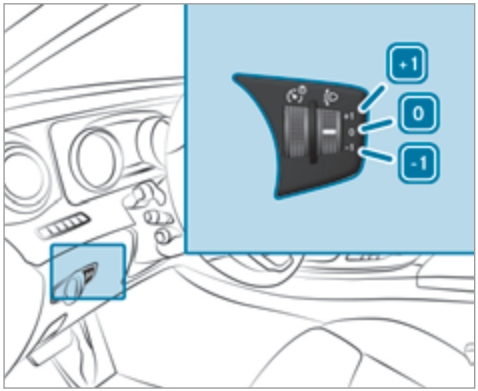

+ 1 Lowers the cone of light of the headlamps when the load compartment is heavily laden and when using the maximum permissible rear axle load to the full

0 Normal position

- 1 Raises the cone of light of the headlamps when all seats are occupied

▶ Turn the headlamp range adjuster to the position which corresponds to the load condition of your vehicle.

Operating the light combination switch

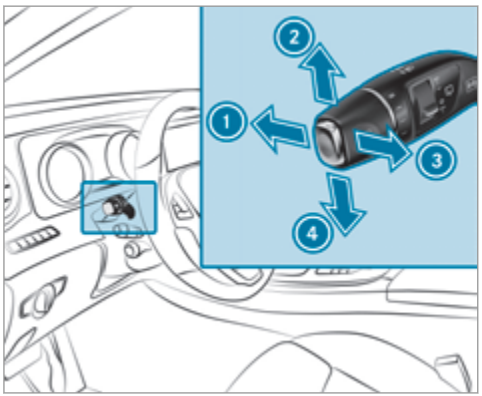

1 Main beam
2 Turn signal light, right
3 Headlamp flashing
4 Turn signal light, left

▶ Pull or push the combination switch in the relevant direction following the arrow.

Switching on the main beam manually

▶ **Vehicles with Adaptive Highbeam Assist Plus:** Turn the light switch to the position.
- Press the combination switch beyond the pressure point in the direction of arrow 1.

When the main beam is activated, the indicator lamp for dipped beam is deactivated and replaced by the indicator lamp for the main beam.

▶ **To switch off the main beam:** move the combination switch back to its starting position.

▶ **To indicate briefly:** press the combination switch briefly up to the pressure point in the direction of arrow 2 or 4.
The corresponding turn signal light flashes three times.

▶ **To indicate for a duration:** press the combination switch beyond the pressure point in the direction of arrow (2) or (4).

Activating/deactivating the hazard warning light

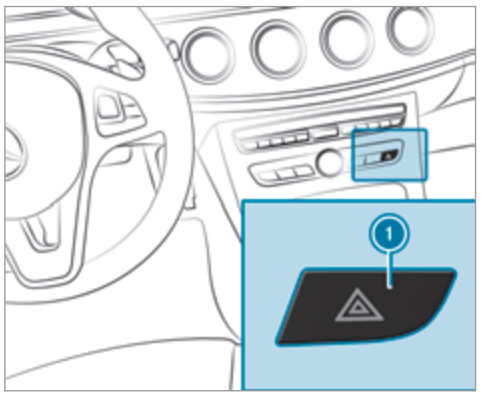

▶ Press button (1).

The hazard warning light switches on automatically if:

- The airbag has been deployed.
- The vehicle brakes sharply from a speed of more than 70 km/h to a standstill.

The hazard warning light switches off automatically when the vehicle reaches a speed exceeding 10 km/h following maximum full-stop braking.

Adaptive functions, MULTIBEAM LED

Function of the Intelligent Light System

The MULTIBEAM LED headlamps adapt to the driving and weather situation and provide extended functions for improving the illumination of the road.

The system comprises the following functions:

- Active headlamps function (→ page 128)
- Cornering light (→ page 129)
- Motorway mode (→ page 129)
- Enhanced fog light function (→ page 129)
- Adverse weather light (→ page 130)
- City lighting (→ page 130)

The system is only active when it is dark.

Active headlamps function



Functions of the active headlamps function:

- The headlamps follow the steering movements.
- Relevant areas are better illuminated while driving.
- **Vehicles with Lane Keeping Assist, Driving Assistance Package, Driving Assistance Plus Package or Traffic Sign Assist:** the active headlamps function evaluates the

course of the lane in which you are driving and adjusts the light in advance.

The function is active when the dipped beam is switched on.

Cornering light function



Cornering light improves the illumination of the roadway over a wide angle in the direction you are turning, enabling better visibility in tight bends, for example. It can only be activated when the dipped beam is switched on.

The function is active:

- At speeds below 40 km/h when the turn signal light is switched on or the steering wheel is turned.
- At speeds between 40 km/h and 70 km/h when the steering wheel is turned.

Roundabout and intersection function: the cornering light is activated on both sides through an evaluation of the current GPS position of the vehicle. It remains active until after the vehicle has left the roundabout or the intersection.

Motorway mode
The motorway mode increases the range and brightness of the cone of light enabling better visibility.



The function is active if a motorway journey is detected by:

- The vehicle's speed.
- The multifunction camera.
- The GPS.

The function is not active:

- At speeds below 80 km/h.

Enhanced fog light function
The enhanced fog light function reduces self-dazzling by the driver and improves the illumination of the edge of the carriageway.

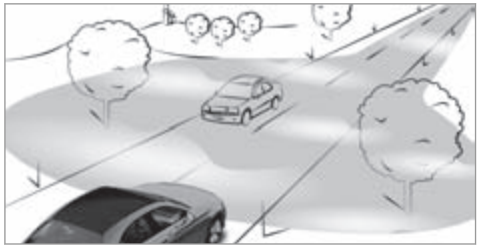

The function is active:

- At speeds below 70 km/h when the rear fog light is switched on.

The function is not active:

- At speeds above 100 km/h after activation.
- When the rear fog light is switched off.

Adverse weather light

The adverse weather light reduces reflections in rainy conditions by dimming individual LEDs in the headlamps. This reduces the glare for the driver and other road users.

City lighting

City lighting improves the illumination of roadsides within built-up areas using a broader distribution of light.

The function is active:

- At lower speeds.
- In illuminated parts of built-up areas.

Switching the Intelligent Light System on/off

Requirement

The light switch is in the AUTO position.

Multimedia system:

→ Vehicle ›› Lights ›› Intelligent Light System

▶ Activate or deactivate the function.

Adaptive Highbeam Assist Plus

Function of Adaptive Highbeam Assist Plus

⚠ **WARNING** Risk of accident despite Adaptive Highbeam Assist Plus

Adaptive Highbeam Assist Plus does not recognise the following road users:

- Road users without lights, e.g. pedestrians
- Road users with poor lighting, e.g. cyclists
- Road users whose lighting is obstructed, e.g. by a barrier

In very rare cases, Adaptive Highbeam Assist Plus may not recognise road users who do have lights, or may recognise them too late.

In this, or in similar situations, the automatic main beam will not be deactivated or will be activated despite the presence of other road users.

▶ Always observe the traffic carefully and switch off the main beam in good time.

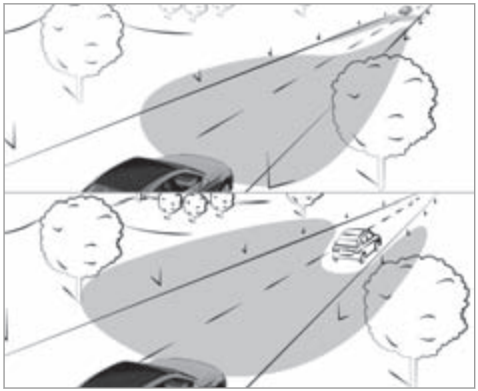

Adaptive Highbeam Assist Plus switches automatically between:

- Dipped beam
- Partial main beam
- Main beam

The partial main beam uses the main beam to shine past other road users rather than dazzling them. The vehicle in front is illuminated by the dipped beam.

At speeds above 30 km/h:

- If no other road users are detected, the main beam is automatically switched on.
- If other road users are detected, the partial main beam is automatically switched on.

At speeds below 25 km/h or when there is sufficient street lighting:

- The partial main beam switches off automatically.
- The main beam switches off automatically.

At speeds above approx. 50 km/h:

- The headlamp range of the dipped beam is regulated automatically based on the distance to other road users.

The system's optical sensor is located behind the windscreen near the overhead control panel.

System limitations

Adaptive Highbeam Assist Plus cannot take into account road, weather or traffic conditions.

Detection may be restricted if:

- Visibility is impaired, for example in fog, heavy rain or snow.
- There is dirt on the sensors or if the sensors are covered over.

Switching Adaptive Highbeam Assist Plus on/off

- **To switch on:** turn the light switch to the AUTO position.
- Switch on the main beam using the combination switch.
  When the main beam is switched on automatically in the dark, the indicator lamp in the multifunction display comes on.
- **To switch off:** switch off the main beam using the combination switch.

Setting the dipped beam

Multimedia system:

→ Vehicle ▸▸ Lights ▸▸ Dipped-beam headlamp conversion

▶ Select Set for right-side traffic or Set for left-side traffic.

Setting the exterior lighting switch-off delay time

Requirement:
The light switch is in the AUTO position.

Multimedia system:

→ Vehicle ▸▸ Lights ▸▸ Exterior lighting delayed shut-off

If you switch on this function, the exterior lighting is switched on for a short time after the vehicle is switched off.

▶ Set the switch-off delay time.

Switching the locator lighting on/off

Multimedia system:

→ Vehicle ▸▸ Lights ▸▸ Locator illumination

The exterior lighting remains lit for 30 seconds after the vehicle is unlocked. When you start the vehicle, the locator lighting is switched off and automatic driving lights are activated.

▶ Activate or deactivate the function.

Interior lighting

Adjusting the interior lighting

Front overhead control panel

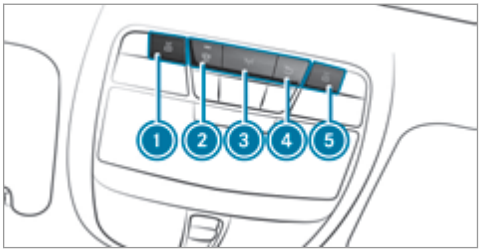

▶ 1 Switches the front left-hand reading lamp on/off

▶ 2 Switches the automatic interior lighting control on/off

▶ 3 Switches the front interior lighting on/off

▶ 4 Switches the rear interior lighting on/off

▶ ⑤ Switches the front right-hand reading lamp on/off

Control panel in the grab handle (rear)

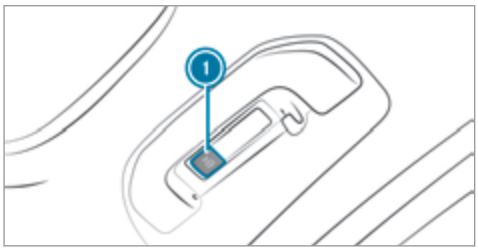

▶ ① Switches the reading lamp on/off

Adjusting the ambient lighting

Multimedia system:

→ Vehicle ▸▸ Lights

Setting the colour

▶ Select Ambient lighting colour.

▶ Select a colour.

Adjusting the brightness

▶ Select Ambient lighting brightness.

▶ **To set the brightness:** select the brightness value using the left-hand setting element.

▶ **To set the zone:** select the zone using the right-hand setting element.

Setting the interior lighting switch-off delay time

Multimedia system:

→ Vehicle ▸▸ Lights ▸▸ Interior lighting delayed shut-off

▶ Set the switch-off delay time.

Changing bulbs (only for vehicles with halogen headlamps)

Notes on changing bulbs

⚠ WARNING Risk of burns from hot component parts whilst replacing a bulb

Bulbs, lamps and plug connectors can become very hot during operation.

When replacing a bulb, you could burn yourself on these component parts.

▶ Allow the component parts to cool down before replacing the bulbs.

- Do not use a bulb if it has been dropped or if its glass tube has been scratched. The bulb may otherwise explode.
- Do not touch the glass tube with your bare hands.
- Protect bulbs from moisture and do not allow bulbs to come into contact with liquids.

Overview of light source types

The following bulbs can be replaced.

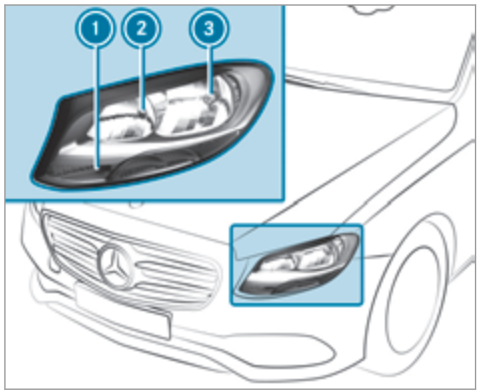

Halogen headlamps

1. Turn signal light: PY 21 W
2. Main beam: H7 55 W
3. Dipped beam: H7 55 W

Changing the front bulbs (vehicles with halogen headlamps)

Fitting/removing the cover on the front wheel arch

Requirements:

- The lighting system is switched off.
- The appropriate front wheel is turned inwards.

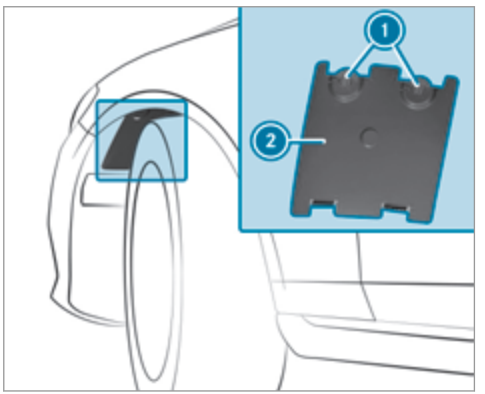

- **Removal (left-hand side of the vehicle):** using a screwdriver, turn rotating catches 1 clockwise as far as they will go. Cover 2 is released.
- **Removal (right-hand side of the vehicle):** using a screwdriver, turn rotating catches 1 anti-clockwise as far as they will go. Cover 2 is released.
- Remove cover 2.
- **To fit:** insert cover 2 into the wheel arch liner.
  - Left-hand side of the vehicle: using a screwdriver, turn rotating catches 1 anti-clockwise as far as they will go.
  - Right-hand side of the vehicle: using a screwdriver, turn rotating catches 1 clockwise as far as they will go.

  Cover 2 is locked.

Replacing bulbs in the halogen headlamp

Requirements:

- **Main beam/dipped beam:** bulb, type H7 55 W.

- **Turn signal light:** bulb, type PY 21 W.
- The lighting system is switched off.
- The cover in the front wheel arch has been removed.
- The engine bonnet is open.

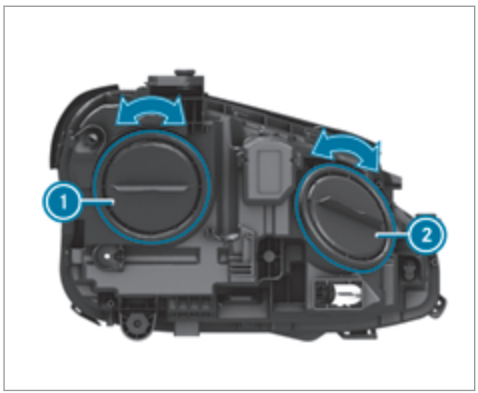

1 Dipped beam
2 Main beam/turn signal light

- Turn the relevant housing cover anti-clockwise and remove it.
- **Main beam/dipped beam:** turn the socket anti-clockwise and remove it.
- **Turn signal light:** turn the socket anti-clockwise, unlock and remove it.
- Pull the bulb out of the socket.
- Insert the new bulb into the socket so that the entire base of the bulb is resting on the bottom of the socket.
- Insert socket and turn it clockwise.
- Press on the housing cover and turn it clockwise.
- Replace the cover in the front wheel arch.

Windscreen wipers and windscreen washer system

Switching the windscreen wipers on/off

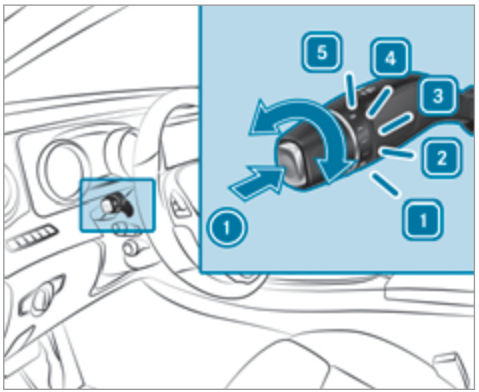

- 1 Single wipe/ wiping with washer fluid
- 1 0 Windscreen wipers off
- 2 ••• Intermittent wiping, normal

- 3 Intermittent wiping, frequent
- 4 Continuous wiping, slow
- 5 Continuous wiping, fast

Switching the rear window windscreen wipers on/off

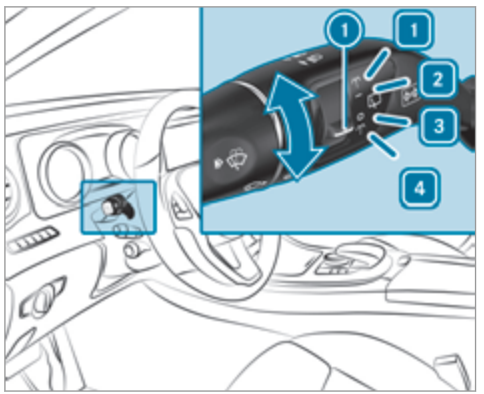

- 1 Switch

- 1 Wipes with washer fluid
- 2 **I** Switches on intermittent wiping
- 3 **0** Switches off intermittent wiping
- 4 Wipes with washer fluid

Replacing the windscreen wiper blades

WARNING Risk of becoming trapped if the windscreen wipers are switched on while wiper blades are being replaced

If the windscreen wipers begin to move while you are changing the wiper blades, you can be trapped by the wiper arm.

- Always switch off the windscreen wipers and ignition before changing the wiper blades.

Moving the wiper arms to a vertical position

- Set the windscreen wipers to the slow continuous wiping position on the combination switch.
- As soon as the wiper arms are vertical relative to the engine bonnet, switch off the ignition.
- Fold the wiper arm away from the windscreen.

Removing the wiper blades

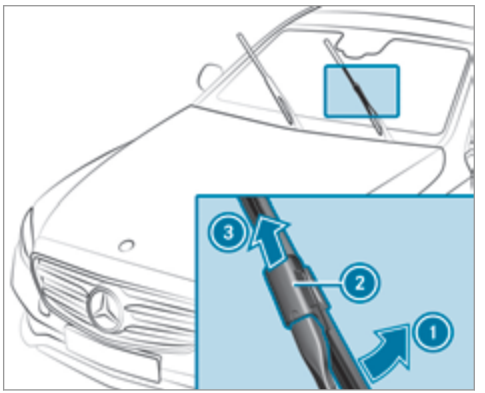

- Hold the wiper arm with one hand. With the other hand, turn the wiper blade in the direction of arrow (1) away from the wiper arm to the stop.
- Slide catch (2) in the direction of arrow (3) until it engages in the removal position.

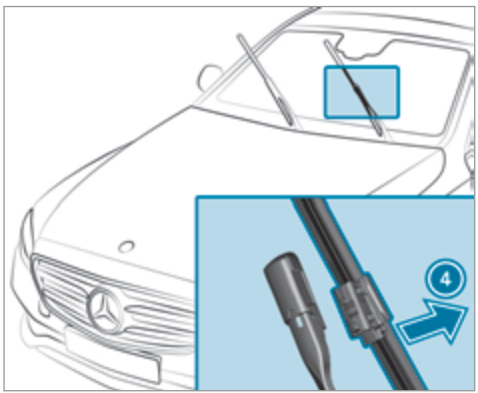

- Remove the wiper blade in the direction of arrow (4) away from the wiper arm.

Fitting the wiper blades

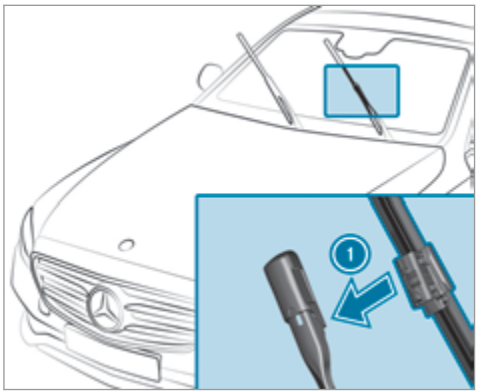

- Insert the new wiper blade into the wiper arm in the direction of arrow (1).

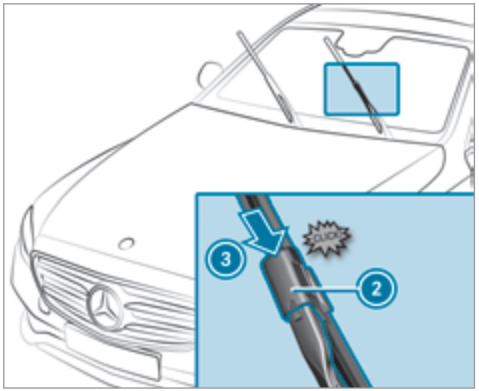

- Slide catch (2) in the direction of arrow (3) until it engages in the locking position.
- Make sure that the wiper blade sits correctly.
- Fold the wiper arm back onto the windscreen.

Maintenance display

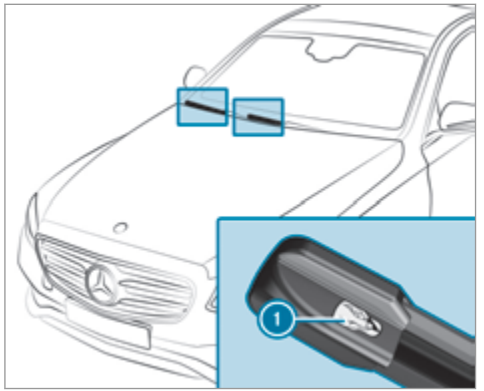

▶ Remove protective film (1) of the maintenance display on the tip of the newly fitted wiper blade.

If the colour of the maintenance display changes from black to yellow, the wiper blades should be replaced.

ⓘ The duration of the colour change varies depending on the usage conditions.

Replacing the rear window wiper blades

Removing the wiper blade

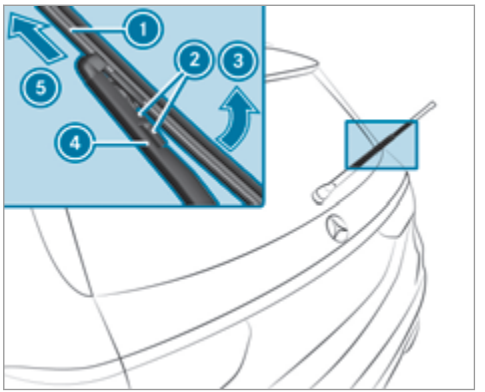

▶ Switch the ignition off.

▶ Fold wiper arm (4) away from the rear window.

▶ Press both release clips (2).

▶ Fold wiper blade (1) in the direction of arrow (3) away from wiper arm (4).

▶ Remove wiper blade (1) in the direction of arrow (5).

Fitting the wiper blades

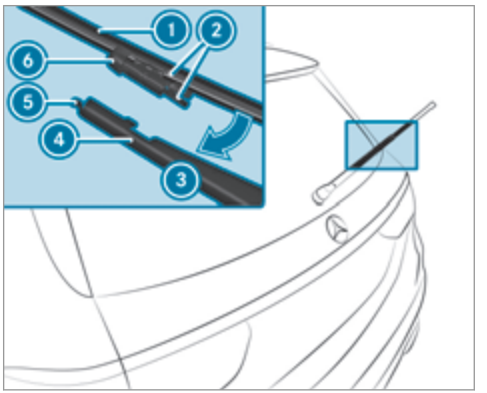

- Position new wiper blade (1) with recess (6) on lug (5).
- Fold wiper blade (1) in the direction of arrow (3) onto the wiper arm until retaining clips (2) engage in bracket (4).
- Make sure that wiper blade (1) sits correctly.
- Fold the wiper arm back onto the rear window.

Mirrors

Operating the outside mirrors

⚠ **WARNING** Risk of injury through adjusting vehicle settings while the vehicle is in motion

You could lose control of the vehicle in the following situations:

- if you adjust the driver's seat, the head restraints, the steering wheel or the mirror while the vehicle is in motion
- if you fasten your seat belt while the vehicle is in motion

- Before starting the engine: adjust the driver's seat, the head restraints, the steering wheel or the mirror and fasten your seat belt.

⚠ **WARNING** Risk of accident due to misjudgement of distances when using the outside mirror

The outside mirrors reflect objects on a smaller scale. The objects in view are in fact closer than they appear.

As a result, you may misjudge the distance between you and the road user driving behind you, e.g. when changing lanes.

- Therefore, always look over your shoulder in order to ensure that you are aware of the actual distance between you and the road users driving behind you.

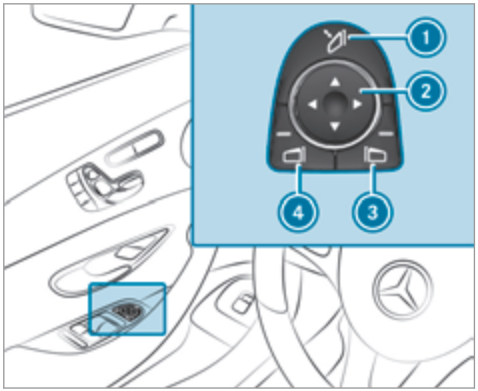

- **To fold in or out:** briefly press button (1).

ⓘ If the battery has been disconnected or completely discharged, the outside mirrors must be reset. Only then will the automatic mirror folding function work properly.

- **To adjust:** select the required mirror using button (3) or (4).

▶ Use button 2 to set the position of the mirror you have selected.

An outside mirror which has been pushed out of position can be engaged in position again in the following manner:

▶ **Vehicles without electrically folding outside mirrors:** manually move the outside mirror into the correct position.

▶ **Vehicles with electrically folding outside mirrors:** press and hold button 1. You will hear a click and the mirror audibly engage in position. The mirror is set into the correct position.

Automatic anti-dazzle mirrors

WARNING Risk of burns and poisoning due to the anti-dazzle mirror electrolyte

Electrolyte may escape if the glass in an automatic anti-dazzle mirror breaks.

The electrolyte is harmful and causes irritation. It must not come into contact with your skin, eyes, respiratory organs or clothing or be swallowed.

▶ If you come into contact with electrolyte, observe the following:

- Rinse the electrolyte from your skin and seek medical attention immediately.
- If electrolyte comes into contact with your eyes, rinse them thoroughly with clean water and seek medical attention immediately.
- If the electrolyte is swallowed, immediately rinse your mouth out thoroughly. Do not induce vomiting. Seek medical attention immediately.
- Immediately change out of clothing which has come into contact with electrolyte.
- If an allergic reaction occurs, seek medical attention immediately.

The outside mirrors and inside rearview mirrors on the driver's side automatically go into anti-dazzle mode if light from a headlamp hits the inside rearview mirror.

System limitations

The mirrors do not go into anti-dazzle mode in the following situations:

- the engine is switched off
- reverse gear is engaged
- interior lighting is switched on

Parking position of the passenger outside mirror

The parking position makes parking easier.

The passenger outside mirror tilts downwards and shows the rear wheel on the front passenger side if:

- the parking position is stored
- the passenger mirror is selected
- reverse gear is engaged

The passenger outside mirror moves back to its original position in the following situations:

- if you shift the transmission to another transmission position
- when driving faster than 15 km/h
- if you press the button for the outside mirror on the driver's side

Saving the parking position of the passenger outside mirror

Requirement:
Reverse gear must not be engaged when storing using the memory button.

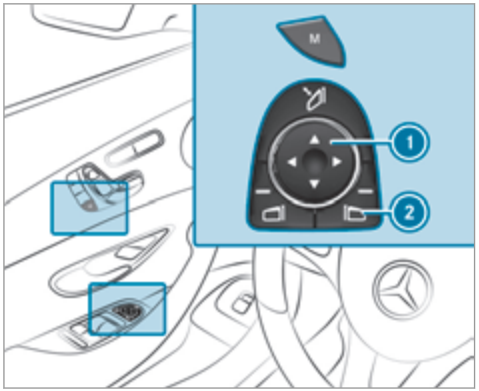

- **To store using the memory button:** select the passenger outside mirror using button (2).
- Move the passenger outside mirror into the desired parking position using button (1).
- Press memory button M.
- Confirm immediately using button (1) to store the setting.

ⓘ No more than three seconds may pass between pressing memory button M and button (1). The mirror setting process is cancelled after three seconds.

Activating/deactivating the automatic mirror folding function

Multimedia system:

→ Vehicle ▸▸ Vehicle settings ▸▸ Automatic mirror-folding function

- Activate ☑ or deactivate ☐ the function.

Operating the sun visors

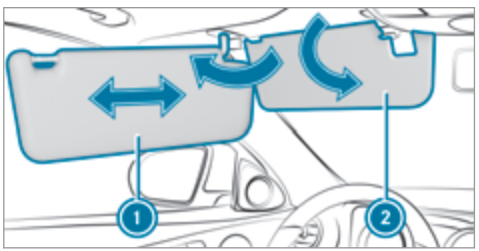

- **Glare from the front:** fold sun visor (1) down.
- **Glare from the side:** swing sun visor (1) to the side.
- Slide sun visor (1) horizontally as required.
- Fold down additional sun visor (2).

Infrared reflective windscreen

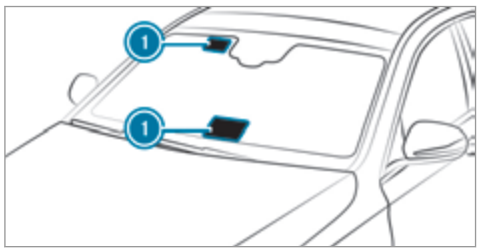

The infrared reflective windscreen is coated and prevents an excessive build-up of heat in the vehicle interior.

The coating shields the vehicle interior against radio waves up into the gigahertz range.

Radio-controlled equipment, such as toll systems, can only be mounted on areas of the windscreen which are permeable to radio waves (1).

Areas permeable to radio waves (1) are best visible from outside the vehicle when the windscreen is illuminated using an external light source.

Overview of climate control systems

Notes on climate control

In order for the air conditioning system, the monitoring of the level of pollution and the filtering of the air function correctly, an interior air filter must always be used. Make sure that the filter is installed correctly and the filter housing in the engine compartment is closed correctly using the cover and always tightly sealed when in operation. Use filters recommended and approved by Mercedes-Benz. Always have service work carried out at a qualified specialist workshop.

THERMATIC control panel overview

The indicator lamps in the buttons indicate that the current function is activated.

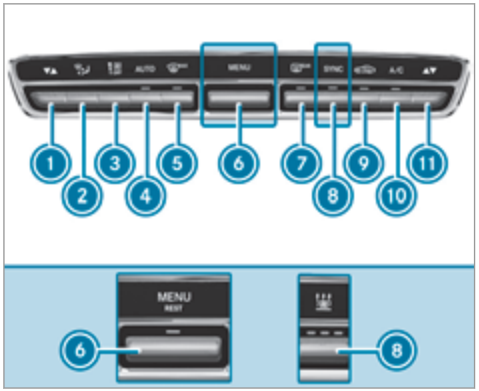

1. To set the driver's side temperature
2. To set the air distribution
3. To set the airflow or switch off climate control
4. To set climate control to automatic mode (→ page 145)
5. To demist the windscreen
6. To call up the air conditioning menu of the multimedia system

   Vehicles with a stationary heater: MENU REST to switch the residual heat on/off (→ page 147)
7. To switch the rear window heater on/off
8. SYNC To activate or deactivate synchronisation (→ page 146)

   Vehicles with a stationary heater: to switch the stationary heater on/off (→ page 149)
9. To switch air-recirculation mode on/off (→ page 147)
10. To switch the A/C function on/off (→ page 145)
11. To set the front passenger side temperature

THERMOTRONIC control panel overview

The indicator lamps in the buttons indicate that the current function is activated.

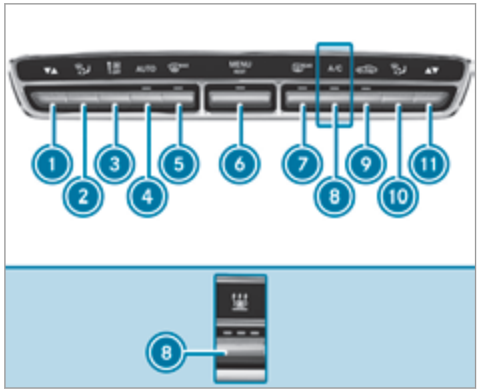

1. To set the driver's side temperature
2. To set the driver's side air distribution
3. To set the airflow or switch off climate control
4. To set climate control to automatic mode (→ page 145)
5. To demist the windscreen
6. To call up the air conditioning menu of the multimedia system
7. To switch the residual heat on/off (→ page 147)
8. To switch the rear window heater on/off
8. A/C To switch the A/C function on/off (→ page 145)
   Vehicles with a stationary heater: to switch the stationary heater on/off (→ page 149)
9. To switch air-recirculation mode on/off (→ page 147)
10. To set the front passenger side air distribution
11. To set the front passenger side temperature

Rear operating unit

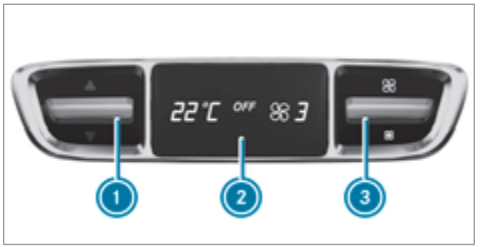

1. To set the temperature
2. Display
3. To set the airflow

Overview of the multimedia system climate control settings

The climate control settings can be adjusted using the climate control bar or the climate control menu.

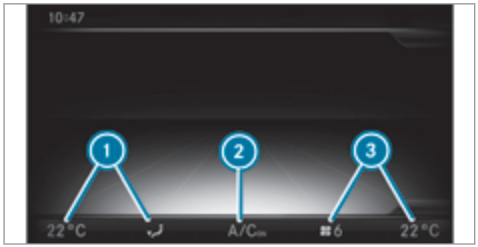

1. To adjust the temperature and air distribution and display the current setting
2. To call up the climate control menu and display the current cooling setting
3. To adjust the airflow and temperature and display the current setting

Operating the climate control system

Switching climate control on/off

- **To switch on:** set the airflow to level 1 or higher using the button.
- **To switch off:** set the airflow to level 0 using the button.

ⓘ When the climate control is switched off, the windows can mist up faster. Only switch off the climate control briefly.

Activating/deactivating the A/C function via the control panel

The A/C function cools, heats and dehumidifies the interior air in the vehicle.

- Press button A/C.

Deactivate the A/C function only briefly otherwise the windows can mist up more quickly.

Condensation may drip from the underside of the vehicle when cooling mode is active. This is not a sign that there is a malfunction.

Activating/deactivating the A/C function using the multimedia system

Multimedia system:

↪ Vehicle

The A/C function heats, cools and dehumidifies the vehicle's interior air.

- **To call up the climate control bar:** navigate down until the climate control bar is active.
- Call up the A/C on/off climate control menu.
- Select ☑ A/C.
- Activate ☑ or deactivate ☐ the function.

ⓘ The climate control bar can be called up from any menu.

Setting climate control to automatic mode

In automatic mode, the set temperature is controlled and maintained at a constant level by the air supply.

- Press the AUTO button.
- **To switch to manual mode:** press the or button.

Climate style

Climate style function

In automatic mode you can select the following climate style settings for the driver's and front passenger areas:

- **FOCUS:** high airflow, slightly cooler setting
- **MEDIUM:** medium airflow, standard setting
- **DIFFUSE:** low airflow, slightly warmer and draught-free setting

Setting the climate style

Requirements:

- THERMOTRONIC automatic climate control is fitted.
- The AUTO button has been pressed.

Multimedia system:

→ Vehicle

▶ **To call up the climate control bar:** navigate down until the climate control bar is active.

▶ Call up the A/C on/off air conditioning menu.

▶ Select Climate mode.

▶ Select FOCUS, MEDIUM or DIFFUSE.

ⓘ The climate control bar can be called up from any menu.

Air distribution settings

The symbols in the display indicate which vents the airflow is being directed through:

- demister vents
- centre and side air vents
- footwell vents
- centre, side and footwell vents
- defroster and footwell vents
- all vents
- defroster, middle and side air vents
- automatic air distribution

Activating/deactivating the climate control synchronisation function via the control panel

Climate control can be set centrally using the synchronisation function. The temperature and air distribution setting for the driver's side is adopted automatically for the front passenger side.

▶ Press button SYNC.

The synchronisation function is deactivated if the settings for one of the other climate zones are changed.

Activating/deactivating the climate control synchronisation function using the multimedia system

Multimedia system:

→ Vehicle

Climate control can be set centrally using the synchronisation function. The temperature setting is automatically adopted for all climate zones.

- **To call up the climate control bar:** navigate down until the climate control bar is active.
- Call up the A/C on/off climate control menu.
- Select ☑ SYNC.
- Activate ☑ or deactivate ☐ the function.

ⓘ The climate control bar can be called up from any menu.

Demisting the windows

Windows misted up on the inside

- Press the AUTO button.
- If the windows continue to mist up: press the MAX button.

Windows misted up on the outside

- Switch on the windscreen wipers.
- Press the AUTO button.

Switching air-recirculation mode on/off

- Press the button.
  The interior air will be recirculated.

Air-recirculation mode is switched off automatically.

ⓘ If air-recirculation mode is switched on, the windows may mist up more quickly. Switch on air-recirculation mode only briefly.

Switching residual heat on/off

Requirement
The vehicle must be switched off.

Using the residual heat of the engine, it is possible to continue heating or ventilating the front compartment of the vehicle, depending on the set temperature, for approximately 30 minutes.

- **To switch on:** press the MENU REST button.

Residual heat is switched off automatically.

Activating and deactivating ionisation

Multimedia system:
→ Vehicle

Ionisation cleans and refreshes the interior air of the vehicle. The ionisation of the interior air is odourless.

- **To call up the climate control bar:** navigate down until the climate control bar is active.
- Call up the A/C on/off climate control menu.
- Select Ionisation.
- Activate or deactivate the function.

ⓘ The climate control bar can be called up from any menu.

Fragrance system

Activating or deactivating the fragrance system

Requirements:
- Automatic climate control is activated.
- The glove box is closed.

Multimedia system:

→ Vehicle

The fragrance system distributes a pleasant fragrance throughout the vehicle interior from a flacon located in the glove box.

- **To call up the climate control bar:** navigate down until the climate control bar is active.
- Call up the A/C on/off climate control menu.
- Select Air freshener.
- Activate or deactivate fragrancing.
- Adjust the intensity.

ⓘ The climate control bar can be called up from any menu.

Inserting or removing the flacon of the fragrance system

⚠ **WARNING** Risk of injury from liquid perfume

If children open the flacon, they could drink the liquid perfume or it could come into contact with their eyes.

- Consult a doctor immediately if liquid perfume has been drunk.
- If liquid perfume comes into contact with your eyes or skin, rinse your eyes with clean water.
- If symptoms continue, consult a doctor.

ENVIRONMENTAL NOTE Environmental damage due to improper disposal of full flacons



Full flacons must not be disposed of with household waste.

- 

Full flacons must be taken to a harmful substance collection point.

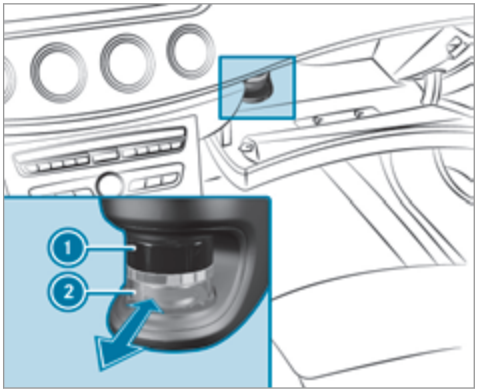

① Cap
② Flacon

- **To insert:** slide the flacon into the holder as far as it will go.
- **To remove:** pull out the flacon.

If you do not use genuine Mercedes-Benz interior perfumes, observe the manufacturers' safety notices on the perfume packaging.

Dispose of the genuine Mercedes-Benz interior perfume flacon when it is empty and do not refill it.

Refillable flacon

- Unscrew the cap of the empty flacon.
- Fill the flacon with a maximum of 15 ml.
- Screw the cap back on to the flacon.

Always refill the empty refillable flacon with the same perfume. Observe the separate information sheet attached to the flacon.

Information on the windscreen heater

The windscreen heater is switched on automatically:

- if the MAX button is activated

After the vehicle is started the windscreen heater is switched on automatically as needed.

Stationary heater/ventilation

Function of the stationary heater/stationary ventilation

- The air in the vehicle interior is heated or ventilated to the set temperature.
- The air in the vehicle interior cannot be cooled down to temperatures below the outside temperature.
- If the outside temperature changes, ventilation mode automatically switches to heating mode or from heating mode to ventilation mode.

The stationary heater and the exhaust gas outlet are situated at the right-hand front wheel.

Switching the stationary heater/stationary ventilation on/off via the control panel

⚠ **DANGER** Risk of fatal injury due to poisonous exhaust gases

If the tailpipe is blocked or sufficient ventilation is not possible, poisonous exhaust gases such as carbon monoxide may enter the vehicle. This is the case in enclosed spaces or if the vehicle gets stuck in snow, for example.

- Always switch the stationary heater off in enclosed spaces without an air extraction systems, e.g. in garages.
- Keep the tailpipe and the area around the vehicle free from snow when the engine or the stationary heater are running.
- Open a window on the windward side of the vehicle to ensure an adequate supply of fresh air.

⚠ **WARNING** Risk of fire due to hot stationary heater components

When the stationary heater is switched on, parts of the vehicle can become very hot, e.g. the exhaust system.

Flammable materials such as leaves, grass or twigs may ignite if they come into contact with:

- hot parts of the exhaust system

- the exhaust gas itself

▶ When the stationary heater is switched on, make sure that:
- hot vehicle parts do not come into contact with flammable materials
- the exhaust gas can flow out of the tailpipe unhindered
- the exhaust gas does not come into contact with flammable materials

! NOTE Battery discharge caused by stationary heater or stationary ventilation operation

Operating the stationary heater or stationary ventilation drains the battery.

▶ After heating or ventilating the vehicle twice, drive for a longer period of time.

Requirement:
The fuel tank is filled to at least reserve fuel level.

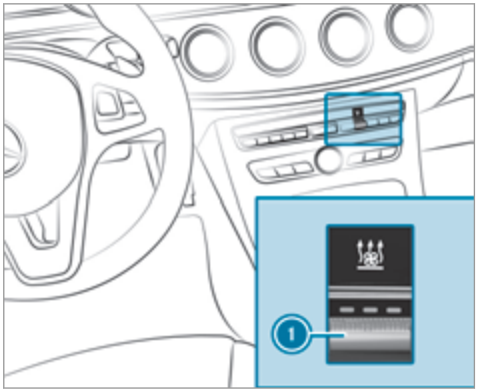

▶ Set the desired temperature using the ▼▲ button.

▶ Press button 1.
The red or blue indicator lamp in button 1 lights up or goes out.

Indicator lamp colours:
- **blue:** stationary ventilation is switched on
- **red:** stationary heater is activated
- **yellow:** departure time is preselected

The stationary heater/stationary ventilation switches off automatically after 50 minutes.

Setting the stationary heater/stationary ventilation using the multimedia system
Multimedia system:
→ Vehicle

You can pre-set three departure times for automatic activation of the stationary heater.

▶ **To call up the climate control bar:** navigate down until the climate control bar is active.

▶ Call up the A/C on/off climate control menu.

▶ Select Auxiliary heating.

▶ Select an option.

ⓘ The climate control bar can be called up from any menu.

Setting the stationary heater/stationary ventilation via remote control

Requirement:
The fuel tank is filled to at least reserve fuel level.



- **To activate immediately:** press and hold the ON button.
- **To set the departure time:** briefly press the ON button.
- Press the ◁ or ▷ button repeatedly until the time to be changed appears in the display.
- Press the ON and OFF buttons simultaneously.
  The ⏲ symbol in the remote control display flashes.
- Press the ◁ and ▷ buttons to set the desired departure time.
- Press the ON and OFF buttons simultaneously.
  The new departure time is stored.

Up to three departure times can be stored.

- **To activate the departure time:** select the desired departure time and press and hold the ON button.
  The ⏰ symbol, the departure time and, depending on the selected departure time, the letter **A, B** or **C** appear in the display.
- **To deactivate the departure time:** select the desired departure time and press and hold the OFF button.
  OFF appears in the display.
- **To check the status of the stationary heater:** briefly press the ON button.
- **To deactivate immediately:** press and hold the OFF button.

Remote control displays (stationary heater/ stationary ventilation)

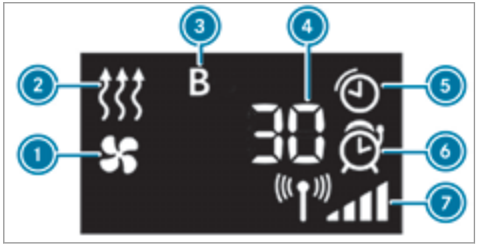

1. Stationary ventilation switched on
2. Stationary heater switched on
3. Selected departure time
4. Remaining time for the stationary heater/ stationary ventilation (in minutes)
5. Stationary heater/stationary ventilation active
6. Departure time activated
7. Signal strength

Further possible displays:

- **Time:** activated departure time.
- **Zero minutes:** the running time for the stationary heater is increased, as the engine has not yet reached operating temperature when it is started.
- **OFF:** the stationary heater/stationary ventilation is switched off.

Replacing the remote control battery (stationary heater)

DANGER Serious damage to health caused by swallowing batteries

Batteries contain toxic and corrosive substances. Swallowing batteries may cause serious damage to health.

There is a risk of fatal injury.

- Keep batteries out of the reach of children.
- If batteries are swallowed, seek medical attention immediately.

ENVIRONMENTAL NOTE Environmental damage due to improper disposal of batteries



Batteries contain toxic and corrosive substances.

- 

Take discharged batteries to a qualified specialist workshop or to a collection point for used batteries.

Requirement:
A CR2450 lithium battery is required when changing the battery.

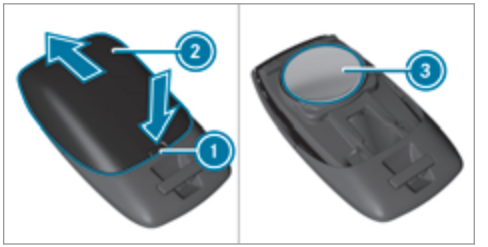

- Press a pointed object into recess (1).
- Slide battery cover (2) backwards in the direction of the arrow.
- Insert new battery (3) with the lettering facing upwards.
- Slide battery cover (2) in the opposite direction to the arrow onto the remote control until it engages.

Problems with the remote control for the stationary heater/stationary ventilation

Problem	Possible causes/consequences and ▶ Solutions
FAIL	The signal transmission between the transmitter and the vehicle is faulty. ▶ Change your position in relation to the vehicle, moving closer if necessary.
FAIL	The starter battery is not sufficiently charged. ▶ Charge the starter battery.
	The fuel tank content is below the reserve fuel level. ▶ Refuel at the nearest filling station.
FAIL	The stationary heater is faulty. ▶ Have the stationary heater checked at a qualified specialist workshop.

Air vents

Adjusting the front air vents

⚠ **WARNING** - Risk of burns/frostbite due to not maintaining a sufficient distance to the air vents

Very hot or very cold air can flow from the air vents.

This could result in burns or frostbite in the immediate vicinity of the air vents.

- ▶ Always ensure that all vehicle occupants maintain a sufficient distance to the air vents.
- ▶ If necessary, redirect the airflow to another area of the vehicle interior.

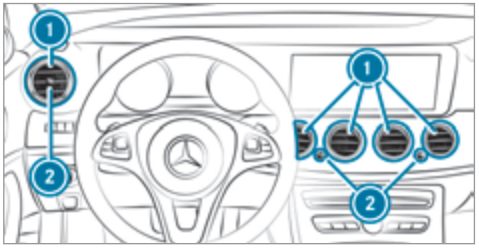

- **To open or close:** turn controller (2) to the left or right as far as it will go.
- **To adjust the air direction:** hold air vent (1) in the centre and move it up or down or to the left or right.

Adjusting the rear air vents

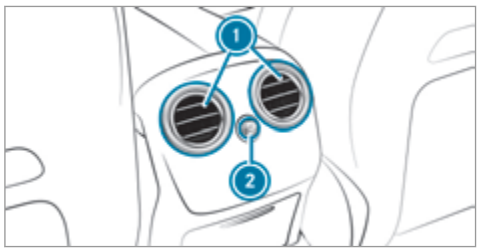

- **To open or close:** turn controller (2) to the left or right as far as it will go.
- **To adjust the air direction:** hold rear air vent (1) in the centre and move it up or down or to the left or right.

Opening/closing the air vent in the glove box

NOTE Damage to temperature-sensitive objects in the glove box

Temperature-sensitive objects stored in the glove box may be damaged by the air vent located inside the glove compartment.

- Close the air vent when you heat the vehicle.
- At high outside temperatures, open the air vent and switch on the A/C function.

Requirement:
Automatic climate control is activated.

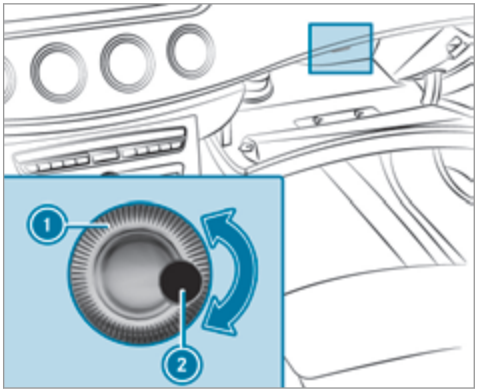

(1) Air vent controller
(2) Air vent

- **To open or close:** turn controller (1) to the left or right.

Driving

Switching on the power supply or ignition using the start/stop button

WARNING Risk of accident and injury due to children left unattended in the vehicle

If children are left unattended in the vehicle, they could:

- Open doors, thereby endangering other persons or road users.
- Get out of the vehicle and be hit by oncoming traffic.
- Operate vehicle equipment.

Moreover, children could also set the vehicle in motion by, for example:

- Releasing the parking brake.
- Shifting the automatic transmission out of park position P or shifting manual transmission into idle position.
- Starting the engine.

▶ Never leave children and animals unattended in the vehicle.

▶ When leaving the vehicle, always take the key with you and lock the vehicle. This also applies to mobile phones if the "Digital Car Key in the smartphone" function is activated via the Mercedes connect me web App.

▶ Keep the keys out of the reach of children. This also applies to mobile phones if the "Digital Car Key in the smartphone" function is activated via the Mercedes connect me web App.

WARNING Risk of exhaust gas poisoning

Combustion engines emit poisonous exhaust gases such as carbon monoxide. Inhaling these exhaust gases causes poisoning.

▶ Never leave the engine running in an enclosed space without sufficient ventilation.

WARNING Risk of fire caused by flammable material on the exhaust system

Flammable materials brought in by either animals or environmental influences may ignite if they come into contact with hot parts of the engine or exhaust system.

▶ Therefore, check regularly that there are no flammable materials in the engine compartment or on the exhaust system.

Requirements:

- The key is located in the vehicle and the key battery is not discharged.
- Or if the "Digital Car Key in the smartphone" function is activated via the Mercedes me connect web App: the mobile phone is located in the vehicle.

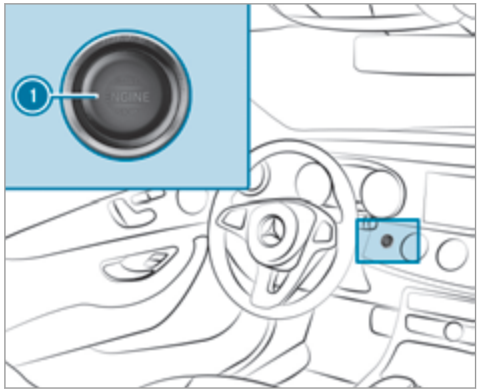

- **To switch on the power supply:** press button 1 once.
  You can now activate the windscreen wipers, for example.

The power supply is switched off again if the following conditions are met:

- The driver's door is open.
- You press button 1 twice.

- **To switch on the ignition:** press button 1 twice.
  The indicator lamps in the instrument cluster light up.

The ignition is switched off again if one of the following conditions is met:

- You do not start the vehicle within 15 minutes.
- You press button 1 once.

Starting the vehicle

Starting the vehicle with the start/stop button

Requirements:

- The key is located in the vehicle and the key battery is not discharged.
- Or if the "Digital Car Key in the smartphone" function is activated via the Mercedes me connect web App: the mobile phone is located in the vehicle.

- **Vehicles with manual transmission:** Depress the clutch pedal.
- **Vehicles with automatic transmission:** Shift the transmission to position P or N.
- Depress the brake pedal and push button 1 once.
- If the vehicle does not start: switch off non-essential consumers and press button 1 once.
- If the vehicle still does not start: start the vehicle in emergency operation mode.

Starting a vehicle with a mobile phone (NFC)

Requirements:

- The vehicle is equipped with the "Digital Car Key in the smartphone" function.
- The "Digital Car Key in the smartphone" function is activated via the Mercedes me connect web app: http://www.mercedes.me.
- Suitable mobile phone with NFC aerial (Near Field Communication) and Secure Element.
- Sufficient charge level of the mobile phone. On some mobile phones, the function is also available when the battery is discharged.

ⓘ You can check the suitability of your mobile phone by entering the phone number at http://www.mercedes.me.
Information about suitable mobile phones can be obtained from your Mercedes-Benz service centre or at http://www.mercedes-benz.com/connect.

ⓘ The function is only available in combination with Mercedes me connect and only in certain countries.

ⓘ Protective cases around the mobile phone can impair the functionality.

Starting the vehicle for the first time after activating the function

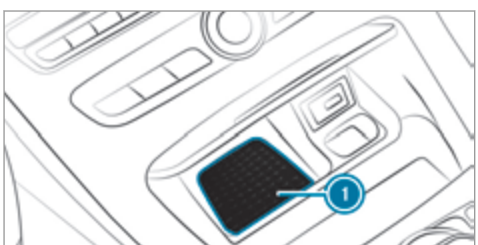

- Make sure that there is a valid vehicle key in the vehicle.
- Place the mobile phone in stowage space 1 so that the NFC aerial areas touch each other.
- Depress the brake pedal and start the vehicle using the start/stop button.

ⓘ The key is not needed for any further starts.

Any further starts

- Place the mobile phone in stowage space 1 so that the NFC aerial areas touch each other, and leave it there while driving.
- Depress the brake pedal and start the vehicle using the start/stop button.

If you lose your mobile phone, deactivate the "Digital Car Key in the smartphone" service in Mercedes me connect at https://www.mercedes.me.

Starting the vehicle in emergency operation mode

If the vehicle cannot be started, the Place the key in the marked space See Owner's Manual display message appears in the multifunction display.

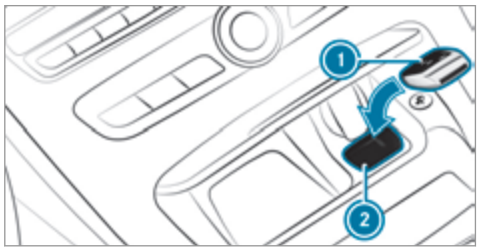

- Make sure that marked space 2 is empty.
- Remove key 1 from the key ring.
- Place key 1 in marked space 2.
  The vehicle will start after a short while.
  If you remove key 1 from marked space 2 the engine continues running. For further vehicle starts however, key 1 must be located in marked space 2 during the entire journey.
- Have key 1 checked at a qualified specialist workshop.

If the vehicle does not start:

- ▶ Leave key (1) in marked space (2).
- ▶ Depress the brake pedal and start the vehicle using the start/stop button.

ⓘ You can also switch on the power supply or the ignition with the start/stop button.

Running-in notes

To preserve the engine during the first 1,500 km:

- drive at varying road speeds and engine speeds.
- drive in drive program **C** or **E**.
- change gear before the rev counter needle is ⅔ of the way to the red area of the rev counter.
- do not shift down a gear manually in order to brake.
- avoid overstraining the vehicle, e.g. driving at full throttle.
- **vehicles with automatic transmission:** do not depress the accelerator pedal past the pressure point (kickdown).
- only increase the engine speed gradually and accelerate the vehicle to full speed after 1,500 km.

This also applies when the engine or parts of the drivetrain have been replaced.

Please also observe the following running-in notes:

- In certain driving and driving safety systems, the sensors adjust automatically while a certain distance is being driven after the vehicle has been delivered or after repairs. Full system effectiveness is not achieved until the end of this teach-in process.
- Brake linings, brake discs and tyres that are either new or have been replaced only achieve optimum braking effect and grip after several hundred kilometres of driving. Compensate for the reduced braking effect by applying greater force to the brake pedal.

Driving tips

⚠ **WARNING** Risk of accident due to objects in the driver's footwell

Objects in the driver's footwell may impede pedal travel or block a depressed pedal.

This jeopardises the operating and road safety of the vehicle.

- ▶ Stow all objects in the vehicle securely so that they cannot get into the driver's footwell.
- ▶ Ensure floor mats and carpets cannot slip and provide sufficient room for the pedals.
- ▶ Do not lay multiple floor mats or carpets on top of one another.

⚠ WARNING Risk of accident due to unsuitable footwear

Operating the pedals may be impaired by wearing unsuitable footwear, e.g.:

- platform shoes
- high-heeled shoes
- slippers

▶ Always wear suitable footwear when driving so that you can operate the pedals safely.

⚠ WARNING Risk of accident if the ignition is switched off while driving

If you switch off the ignition while driving, functions relevant to safety are restricted or no longer available. This may effect, for example, the power steering system and the brake force boosting.

You will then need to use considerably more force to steer and brake.

▶ Do not switch off the ignition while driving.

⚠ WARNING Risk of exhaust gas poisoning

Combustion engines emit poisonous exhaust gases such as carbon monoxide. Inhaling these exhaust gases causes poisoning.

▶ Never leave the engine running in an enclosed space without sufficient ventilation.

⚠ WARNING Risk of skidding and of an accident due to shifting down on slippery road surfaces

If you shift down on slippery road surfaces to increase the engine braking effect, the drive wheels may lose traction.

▶ Do not shift down on slippery road surfaces to increase the engine braking effect.

⚠ DANGER Risk of fatal injuries due to poisonous exhaust gases

If the tailpipe is blocked or sufficient ventilation is not possible, poisonous exhaust gases such as carbon monoxide may enter the vehicle. This is the case, for example, if the vehicle is stuck in snow.

▶ When the engine or the stationary heater are running, keep the tailpipe and the area around the vehicle clear of snow.

▶ Open a window on the side of the vehicle facing the wind to ensure an adequate supply of fresh air.

⚠ WARNING Risk of accident due to the brake system overheating

If you leave your foot on the brake pedal when driving, the brake system may overheat.

This increases the braking distance and the brake system may even fail.

- ▶ Never use the brake pedal as a footrest.
- ▶ Do not depress the brake pedal and the accelerator pedal at the same time while driving.

! NOTE Causing wear to the brake linings by permanently depressing the brake pedal

- ▶ Do not permanently depress the brake pedal while driving.
- ▶ To use braking effect of the engine, shift to a lower gear in good time.

! NOTE Damage to the drivetrain and engine when pulling away

- ▶ Do not warm up the engine when stationary. Pull away immediately.
- ▶ Avoid high engine speeds and full throttle until the engine has reached its operating temperature.
- ▶ Do not allow the wheels to spin.

! NOTE Damage to the catalytic converter due to non-combusted fuel

The engine is not running smoothly and is misfiring.

Non-combusted fuel may get into the catalytic converter.

- ▶ Only depress the accelerator pedal slightly.
- ▶ Have the cause rectified immediately at a qualified specialist workshop.

Limited braking effect on salt-treated roads:

- due to salt build-up on the brake discs and brake lining, the braking distance can increase considerably or result in braking only on one side.
- maintain a much greater distance to the vehicle in front.

To prevent salt build-up:

- brake occasionally while paying attention to the traffic conditions.
- carefully depress the brake pedal at the end of the journey and when starting the next journey.

ECO start/stop function

Operation of the ECO start/stop function

The engine is switched off automatically:

- **Vehicles with manual transmission:** If you brake the vehicle, shift into neutral N when travelling at a low speed and then release the clutch pedal.
- **Vehicles with automatic transmission:** If you brake the vehicle to a standstill in transmission position D or N.
- If all vehicle conditions for an automatic engine stop are met.

The Ⓐ symbol appears in the multifunction display when the vehicle is stationary. If not all the vehicle conditions are met, the Ⓐ symbol appears in the multifunction display.

The engine is restarted automatically if:

- **Vehicles with manual transmission:** You depress the clutch pedal.
- **Vehicles with manual transmission:** You engage reverse gear R.
- **Vehicles with automatic transmission:** In transmission position D, you release the brake pedal when the HOLD function is not active.
- **Vehicles with automatic transmission:** You shift out of transmission position P.
- **Vehicles with automatic transmission:** You shift into transmission position D or R.
- You depress the accelerator pedal.
- **All vehicles except E 220 d 4MATIC All-Terrain:** You switch to drive program **S+**
- **E 220 d 4MATIC All-Terrain:** You switch to drive program **All-Terrain**.
- You change the vehicle level.
- An automatic engine start is necessary.

If the engine was switched off by the ECO start/stop function and you leave the vehicle, a warning tone sounds. The Vehicle is operational Switch off the ignition before exiting display message also appears in the multifunction display.

If you do not switch off the ignition, the ignition is automatically switched off after one minute.

Switching the ECO start/stop function off/on

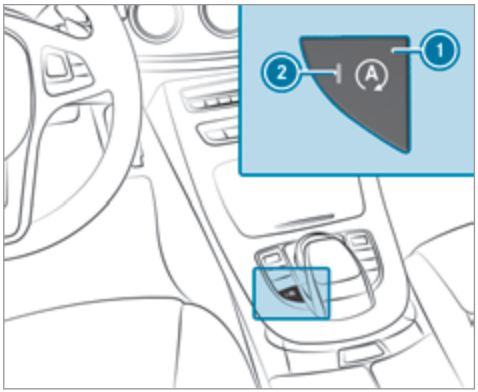

▶ Press button 1.
If indicator lamp 2 lights up, the ECO start/stop function is switched on.

ⓘ Depending on the model, the button may also be located at a different position in the centre console.

ECO display

The ECO display summarises the driving style from the start of the journey to its completion and assists you in achieving the most economical driving style.

You can influence consumption if you:

- drive with particular care
- drive the vehicle in drive program **E**
- observe the gearshift recommendations

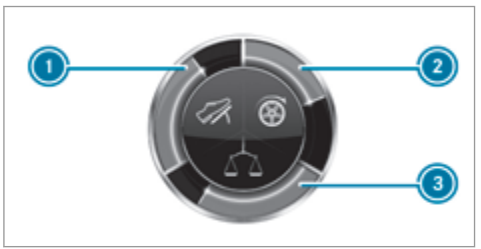

The inner segment lights up green and the outer segment fills up:

- 1 Moderate acceleration
- 2 Gentle deceleration and rolling
- 3 Consistent speed

The inner segment is grey and the outer segment empties:

- 1 Sporty acceleration
- 2 Heavy braking
- 3 Fluctuations in speed

You have driven economically when:

- the three outer segments are completely filled simultaneously.
- the ECO display border lights up.

The additional range achieved as a result of your driving style in comparison to a driver with a very sporty driving style is shown under Bonus from start. The range displayed does not indicate a fixed reduction in consumption.

DYNAMIC SELECT switch

Function of the DYNAMIC SELECT switch

Use the DYNAMIC SELECT switch to change between the following drive programs:

- **I (Individual):** individual settings
- **All vehicles except E 220 d 4MATIC All-Terrain: S+ (Sport Plus):** particularly sporty driving style
- **S (Sport):** sporty driving style
- **C (Comfort):** comfortable and economical driving style
- **E (Economy):** particularly economical driving style
- **E 220 d 4MATIC All-Terrain: All-Terrain:** the drive program for all surfaces

Depending on the drive program selected, the following vehicle characteristics will change:

- Drive system
  - Engine and transmission management
  - ESP®
  - Distance Pilot DISTRONIC

- Suspension
- Steering
- Availability of the ECO start/stop function

ⓘ Time until the next vehicle start:

- Less than four hours: the last selected drive program is active.
- More than four hours: drive program **C** is active.

Operating the DYNAMIC SELECT switch

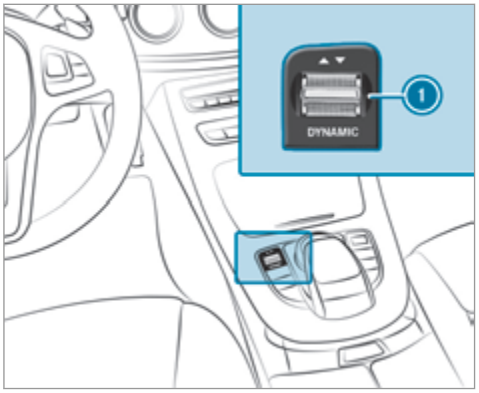

▶ Press DYNAMIC SELECT switch (1) forwards or backwards.
The drive program selected appears in the multifunction display.

Configuring drive program I

Multimedia system:

↳ Vehicle ▸▸ DYNAMIC SELECT ▸▸ Individual

▶ Select the individual setting.

Manual transmission

Operating the gearshift lever

! **NOTE** Damage to the engine and transmission by shifting to a gear that is too low

▶ When changing between gears 5 and 6 push the gearshift lever to the right.

▶ Do not shift down at high speeds.

! **NOTE** Damage to the transmission by shifting to reverse gear R while the vehicle is in motion

▶ Only shift into reverse gear R when the vehicle is stationary.

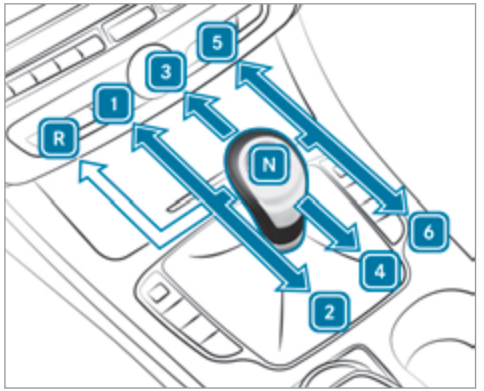

R Reverse gear
1 - 6 Forward gears
N Neutral

► Depress the clutch pedal and shift the gearshift lever into the required position.

Gearshift recommendation

The gearshift recommendations assist you in adopting an economical driving style.

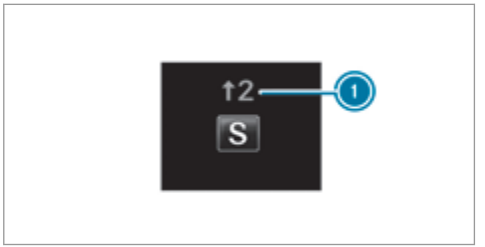

► If gearshift recommendation message (1) is shown in the multifunction display, shift to the recommended gear.

Automatic transmission

DIRECT SELECT lever

Function of the DIRECT SELECT lever

WARNING Risk of accident and injury due to children left unattended in the vehicle

If children are left unattended in the vehicle, they could:

- Open doors, thereby endangering other persons or road users.
- Get out of the vehicle and be hit by oncoming traffic.
- Operate vehicle equipment.

Moreover, children could also set the vehicle in motion by, for example:

- Releasing the parking brake.
- Shifting the transmission out of park position P.
- Starting the engine.

- Never leave children and animals unattended in the vehicle.
- When leaving the vehicle, always take the key with you and lock the vehicle. This also applies to mobile phones if the "Digital Car Key in the smartphone" function is activated via the Mercedes me connect web app.
- Keep the keys out of the reach of children. This also applies to mobile phones if the "Digital Car Key in the smartphone" function is activated via the Mercedes me connect web app.

⚠ **WARNING** Risk of accident due to incorrect gearshifting

If the engine speed is higher than the idle speed and you engage the transmission position D or R, the vehicle may accelerate sharply.

- If you engage the transmission position D or R always depress the brake pedal firmly and do not accelerate at the same time.

! **NOTE** Damage to the automatic transmission caused by changing the transmission position during the journey

- Only change the transmission position when the vehicle is stationary.

Use the DIRECT SELECT lever to shift the transmission position. The current transmission position is displayed in the multifunction display.

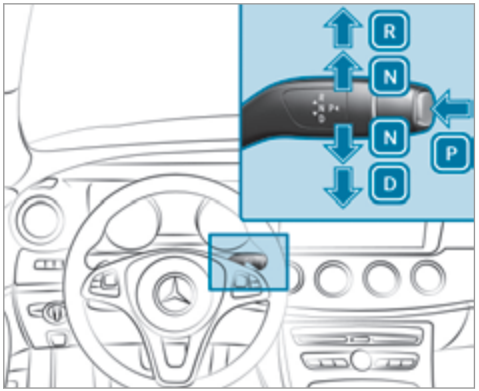

P Park position
R Reverse gear
N Neutral
D Drive position

Engaging reverse gear R

- Depress the brake pedal and push the DIRECT SELECT lever up past the first point of resistance.
  The transmission position display shows R in the multifunction display.

Shifting to neutral N

- Depress the brake pedal and push the DIRECT SELECT lever up or down to the first point of resistance.
  Transmission position display N is shown in the multifunction display.

Releasing the brake pedal will allow you to move the vehicle freely, e.g. to push it or tow it away.

If you want the automatic transmission to remain in neutral N even if the ignition is switched off:

- Start the vehicle.
- Depress the brake pedal and shift to neutral N.
- Release the brake pedal.
- Switch the ignition off.

ⓘ If you leave the key in the vehicle and then exit the vehicle, the automatic transmission remains in neutral N

Engaging park position P

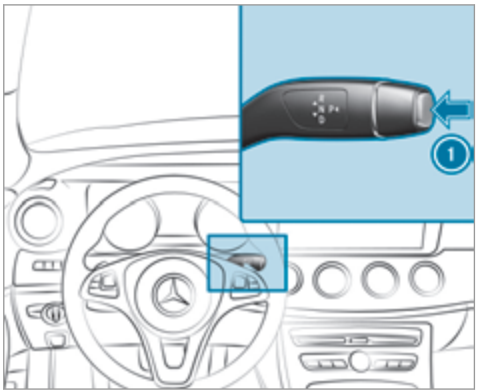

- Press button 1.
  Transmission position display P is shown in the multifunction display.

Park position P is engaged automatically if one of the following conditions is met:

- If you switch the engine off with the transmission in position D or R.
- If you open the driver's door when the vehicle is stationary or when driving at a very low speed and the transmission is in position D or R.

Engaging drive position D

- Depress the brake pedal and push the DIRECT SELECT lever down past the first point of resistance.
  The transmission position display shows D in the multifunction display.

When the automatic transmission is in transmission position D, it shifts the gears automatically. This is determined by:

- The selected drive program
- The position of the accelerator pedal
- The road speed

Manual gearshifting

WARNING Risk of skidding and of an accident due to shifting down on slippery road surfaces

If you shift down on slippery road surfaces to increase the engine braking effect, the drive wheels may lose traction.

- Do not shift down on slippery road surfaces to increase the engine braking effect.

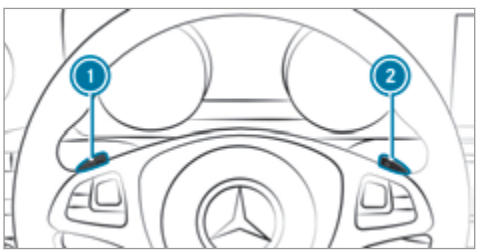

- **To activate:** pull steering wheel gearshift paddle 1 or 2.
  Manual gearshifting is activated for a short time. The current gear is displayed in the multifunction display.
- **To shift up:** pull steering wheel gearshift paddle 2.
- **To shift down:** pull steering wheel gearshift paddle 1.
- **To deactivate:** pull steering wheel gearshift paddle 2 and hold it in place.
  The transmission position D appears in the multifunction display.

ⓘ If you select the **Manual** drive setting in drive program **I**, manual gearshifting is permanently activated.

Gearshift recommendation

The gearshift recommendations assist you in adopting an economical driving style.

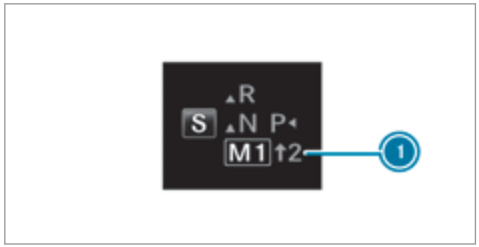

- If gearshift recommendation message 1 is shown in the multifunction display, shift to the recommended gear.

Using kickdown

- **Maximum acceleration:** depress the accelerator pedal beyond the pressure point.

During kickdown, you cannot shift gears using the steering wheel gearshift paddles. The automatic transmission shifts up to the next gear when the maximum engine speed is reached to protect the engine from overrevving.

▶ Ease off the accelerator pedal once the desired speed is reached.

Glide mode function

Glide mode helps you to reduce fuel consumption.

Glide mode is characterised by the following:

- The combustion engine is disconnected from the drivetrain.
- The engine speed corresponds to the idle speed.

Glide mode is activated if the following conditions are met:

- Drive program **E** is selected.
- The speed is within a suitable range.
- The course of the road is suitable, e.g. no steep uphill or downhill gradients.
- You are no longer depressing the accelerator or brake pedal.

ⓘ Glide mode can also be activated if you have selected the "Eco" setting for the drive (engine management) when in drive program **I**.

Glide mode is deactivated again if one of the conditions is no longer met.

Vehicles with Driving Assistance Package, Distance Pilot DISTRONIC or Active Brake Assist: Glide mode is also deactivated depending on the traffic situation and the vehicle then switches to overrun mode. This further reduces fuel consumption.

Glide mode can also be prevented by the following parameters:

- Gradient
- Temperature
- Height
- Speed
- Obstacle detection
- Operating condition of the engine

Refuelling

Refuelling the vehicle

⚠ **WARNING** - Risk of fire or explosion caused by fuel

Fuels are highly inflammable.

▶ You must avoid fire, naked flames, creating sparks and smoking.

▶ Before refuelling, switch off the engine and auxiliary heating if your vehicle is equipped with auxiliary heating.

⚠ **WARNING** Risk of injury from fuel

Fuels are poisonous and harmful to your health

▶ Do not swallow fuel or let it come into contact with skin, eyes or clothing.

▶ Do not inhale fuel vapour.

▶ Keep children away from fuel.

If you or other people come into contact with fuel, observe the following:

- Immediately rinse fuel off your skin with soap and water.
- If fuel comes into contact with your eyes, immediately rinse them thoroughly with clean water. Seek medical attention immediately.
- If you swallow fuel, seek medical attention immediately. Do not induce vomiting.
- Change immediately out of clothing that has come into contact with fuel.

⚠ WARNING Risk of fire and explosion due to electrostatic charge

Electrostatic charge can cause sparks and thereby ignite fuel vapours.

- Touch the metal vehicle body before opening the fuel filler cap or touching the pump nozzle.

This discharges any electrostatic charge that may have built up.

⚠ WARNING Risk of fire from fuel mixture

Vehicles with a diesel engine:

If you mix diesel fuel with petrol, the flash point of the fuel mixture is lower than that of pure diesel fuel.

While the engine is running, component parts in the exhaust system may overheat without warning.

- Never refuel using petrol.
- Never mix petrol with diesel fuel.

! NOTE Damage caused by the wrong fuel

Fuel that does not conform to the required quality can lead to increased wear as well as damage to the engine and exhaust system.

- Only use the fuel recommended.

! NOTE Damage caused by the wrong fuel

Vehicles with a petrol engine:

Even small amounts of the wrong fuel could result in damage to the fuel system, the engine and the emission control system.

- Only refuel using premium-grade unleaded fuel that conforms to EN 228, or an equivalent specification.

Fuel of this specification may contain up to 10 % ethanol. Your vehicle is suitable for use with E10 fuel.

Do not refuel using:

- Diesel
- E85, E100
- Petrol containing methanol (M15, M30, M85, M100)
- Petrol with additives containing metal

If you accidentally refuel with the wrong fuel:

- Do not switch the ignition on.
- Consult a qualified specialist workshop.

! NOTE Damage caused by the wrong fuel

Vehicles with a diesel engine:

Even small amounts of the wrong fuel could result in damage to the fuel system, the engine and the emission control system.

- ▶ Only refuel using diesel fuel that conforms to European standard EN 590, or an equivalent specification.
- ▶ **Vehicles with diesel particulate filters:** in countries outside the EU, only use low-sulphur Euro diesel with a sulphur content of under 50 ppm.

Do not use the following:

- Petrol
- Marine diesel
- Heating oil
- Bio-diesel
- Vegetable oil
- Paraffin
- Kerosene

! NOTE Do not use diesel to refuel vehicles with a petrol engine.

- ▶ Do not switch on the ignition if you accidentally refuel with the wrong fuel. Otherwise, fuel can enter the fuel system. Even small amounts of the wrong fuel could result in damage to the fuel system and the engine. Notify a qualified specialist workshop and have the fuel tank and fuel lines drained completely.

! NOTE Do not use petrol to refuel vehicles with a diesel engine.

- ▶ Do not switch on the ignition if you accidentally refuel with the wrong fuel. Otherwise, fuel can enter the fuel system. Even small amounts of the wrong fuel could result in damage to the fuel system and the engine. The repair costs are high. Notify a qualified specialist workshop and have the fuel tank and fuel lines drained completely.

! NOTE Do not overfill the fuel tank, otherwise the fuel system may be damaged.

- ▶ Only fill the fuel tank until the pump nozzle switches off.

! NOTE Do not overfill the fuel tank, otherwise fuel may spay out when you remove the pump nozzle.

- ▶ Only fill the fuel tank until the pump nozzle switches off.

Requirement:
The vehicle must be unlocked.

ⓘ Do not get into the vehicle again during the refuelling process. Otherwise, electrostatic charge could build up again.

Observe the notes on operating fluids (→ page 363).

Refuelling

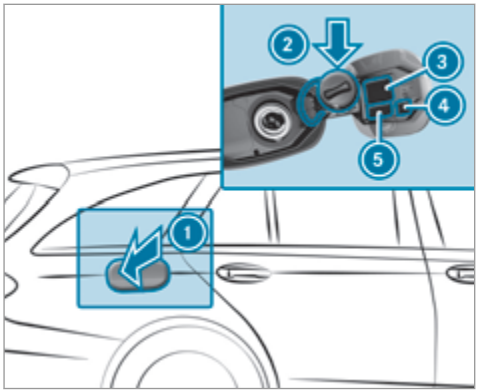

1 Fuel filler flap
2 Bracket for the fuel filler cap
3 Tyre pressure table
4 QR code for rescue card
5 Fuel type

- Press fuel filler flap 1.
- Turn the fuel filler cap anti-clockwise and remove it.
- Insert the fuel filler cap into holder 2.
- Completely insert the filler neck of the fuel pump nozzle into the tank, hook in place and refuel.
- Only fill the fuel tank until the pump nozzle switches off.

ⓘ **Vehicles with a diesel engine:** the filler neck is designed for refuelling at diesel filling pumps.

ⓘ **Vehicles with a diesel engine:** when the fuel tank is completely empty, refuel with at least 5 litres of diesel.

AdBlue® (diesel engine vehicles only)

Notes on AdBlue®

! **NOTE** When you open the AdBlue® tank, small amounts of ammonia vapour may escape.

- Only fill the AdBlue® tank in well-ventilated areas.
- Do not let AdBlue® come into contact with skin, eyes or clothes.
- Keep AdBlue® away from children.

! **NOTE** Do not ingest AdBlue®.

If AdBlue® is swallowed:

- Immediately rinse out your mouth thoroughly.
- Drink plenty of water.
- Seek medical attention immediately.

AdBlue® is a fluid urea solution for exhaust gas aftertreatment of diesel engines. In order for the

exhaust gas aftertreatment to function properly, only use AdBlue® in accordance with ISO 22241.

AdBlue® is characterised by the following:

- non-toxic
- colourless and odourless
- non-flammable

AdBlue® may be topped up by fast service at a qualified specialist workshop, e.g. a Mercedes-Benz Service Centre.

AdBlue® is available at many filling stations from AdBlue® filling pumps.

Alternatively, AdBlue® is available at qualified specialist workshops, e.g. Mercedes-Benz Service Centres, and at many filling stations in AdBlue® refill canisters or AdBlue® refill bottles.

ⓘ Ensure the connection between the refill container and vehicle filler neck does not drip.

Topping up AdBlue®

! **NOTE** Engine damage due to AdBlue® in the fuel

- ▶ AdBlue® must not be used to fill the fuel tank.
- ▶ Only use AdBlue® to fill the AdBlue® tank.
- ▶ Do not overfill the AdBlue® tank.

! **NOTE** Contamination of the vehicle interior due to AdBlue® leakage

- ▶ After topping up, carefully close the AdBlue® refill container.
- ▶ Avoid carrying AdBlue® refill containers permanently in the vehicle.

Requirements:

The following announcements appear in order in the multifunction display when the AdBlue® tank requires refuelling:

- Refill AdBlue See Owner's Manual. The AdBlue® reservoir is down to the reserve level.
- Refill AdBlue No start in XXX mi. You can still drive the vehicle over the distance shown. Top up AdBlue® as soon as possible.
- Refill AdBlue Start not possible. The vehicle can no longer be started.

The vehicle must be unlocked.

Opening the AdBlue® filler cap

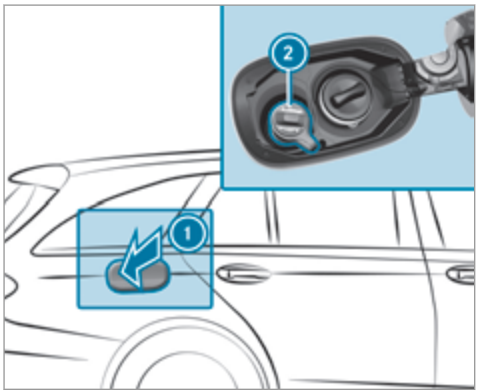

- Press fuel filler flap (1).
- Turn AdBlue® filler cap (2) anti-clockwise and remove it.

Preparing the AdBlue® refill canister

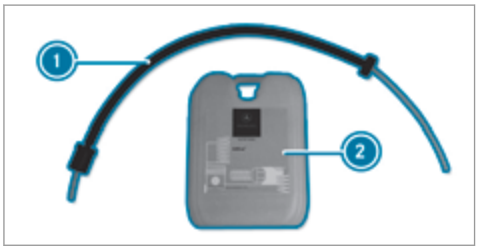

- Screw on the fastener of AdBlue® refill canister (2).
- Screw disposable hose (1) onto the opening of AdBlue® refill canister (2) until finger-tight.

Topping up AdBlue®

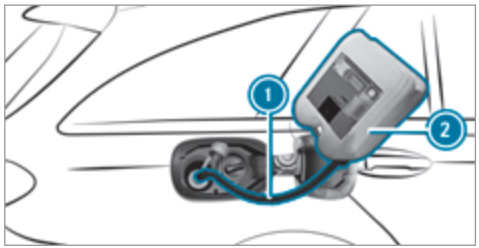

- Screw disposable hose (1) onto the filler neck of the vehicle until finger-tight.
- Lift up and tip AdBlue® refill canister (2). The filling process stops when the AdBlue® tank is completely full.

  AdBlue® refill canister (2) can be removed when it has been only partially emptied.
- Unscrew and close disposable hose (1) and AdBlue® refill canister (2) in reverse order.
- After topping up the AdBlue® tank, switch on the ignition for at least 60 seconds.

▶ Start the vehicle.
The display message in the instrument cluster goes out.

ⓘ Avoid storing AdBlue® refill containers permanently in the vehicle.

Parking

Switching off the vehicle with the start/stop button

⚠ WARNING Risk of fire caused by hot exhaust system parts

Flammable material such as leaves, grass or twigs may ignite if they come into contact with hot parts of the exhaust system or exhaust gas flow.

▶ Park the vehicle so that no flammable material can come into contact with hot vehicle components.

▶ In particular, do not park on dry grassland or harvested grain fields.

⚠ WARNING Risk of accident and injury due to children left unattended in the vehicle

If you leave children unattended in the vehicle, they may be able to set the vehicle in motion, for example by:

- Releasing the parking brake.
- Shifting the automatic transmission out of park position P or shifting the manual transmission into neutral.
- Starting the engine.

In addition, they may operate vehicle equipment.

▶ Never leave children and animals unattended in the vehicle.

▶ When leaving the vehicle, always take the key with you and lock the vehicle. This also applies to mobile phones if the "Digital Car Key in the smartphone" function is activated via the Mercedes connect me web app.

! NOTE Damage to the vehicle or the drivetrain caused by the vehicle rolling away

▶ Always properly secure the vehicle against rolling away.

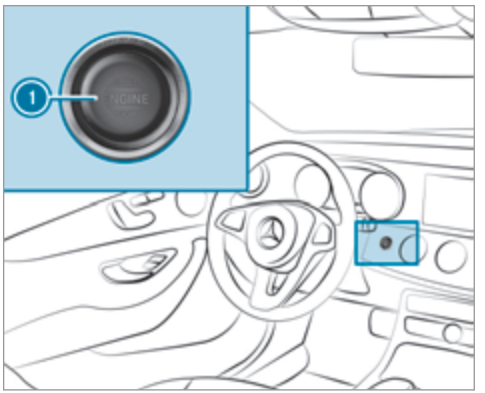

▶ On uphill or downhill inclines, turn the front wheels towards the kerb.

- **Vehicles with manual transmission:** Engage first 1 or reverse gear R.
- Apply the electric parking brake.
- Press button (1) once.

ⓘ When you switch off the vehicle, you can still operate the side windows and the panoramic sliding sunroof for five minutes.

Garage door opener

Programming buttons for the garage door opener

⚠ WARNING Risk of exhaust gas poisoning

Combustion engines emit poisonous exhaust gases such as carbon monoxide. Inhaling these exhaust gases causes poisoning.

- Never leave the engine running in an enclosed space without sufficient ventilation.

⚠ WARNING Risk of injury and entrapment when opening the garage door using the garage door opener

When you operate or program the garage door with the integrated garage door opener, persons in the range of movement of the garage door can become trapped or struck by the garage door.

- When using the integrated garage door opener, always make sure that nobody is within the sweep of the garage door.

Prior to programming a garage door opener, park the vehicle outside the garage and switch off the engine.

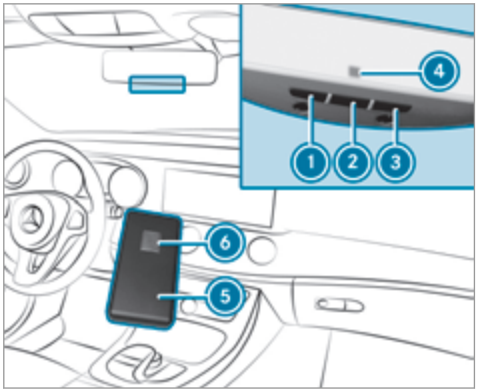

- Press and hold button (1), (2) or (3) that you wish to program.
  Indicator lamp (4) flashes yellow.

ⓘ It can take up to 20 seconds before the indicator lamp flashes yellow.

- Release the previously pressed button.
  Indicator lamp (4) continues to flash yellow.

- ▶ Point remote control ⑤ at a distance of 1 cm to 8 cm towards buttons ①, ② or ③.
- ▶ Press and hold button ⑥ of remote control ⑤ until:
  - Indicator lamp ④ lights up green continuously. Programming is complete.
  - Indicator lamp ④ flashes green. Programming was successful. Additionally, synchronisation of the rolling code with the garage door system must also take place.
- ▶ If indicator lamp ④ does not light up or flash green: repeat the procedure.
- ▶ Release all of the buttons.

ⓘ The remote control for the garage door drive is not included in the scope of delivery of the garage door opener.

Synchronising the rolling code

Requirements:

- The garage door system uses a rolling code.
- The vehicle must be within range of the garage door or exterior gate drive.
- The vehicle as well as persons and objects, are located outside the sweep of the garage door.

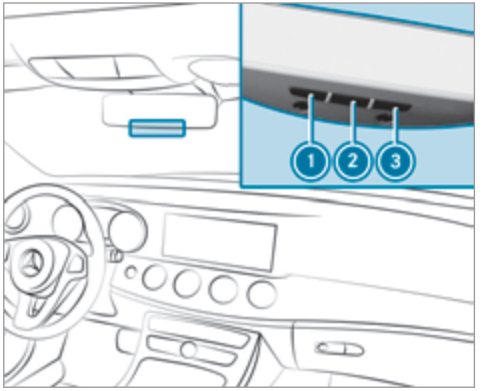

- ▶ Press the programming button on the door drive unit.
  Initiate the next step within approximately 30 seconds.
- ▶ Press previously programmed button ①, ② or ③ repeatedly, until the door closes. When the door closes, programming is completed.

ⓘ Please also read the operating instructions for the garage door drive.

Troubleshooting when programming the remote control

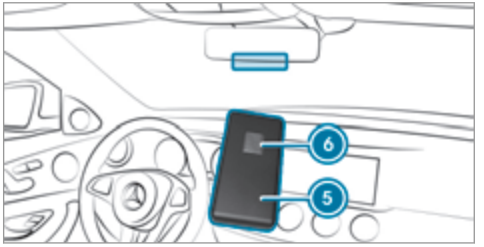

- ▶ Check if the transmitter frequency of remote control ⑤ is supported.
- ▶ Replace the batteries in remote control ⑤.

- Hold remote control (5) at various angles at a distance between 1 cm to 8 cm in front of the inside rearview mirror. You should test every position for at least 25 seconds before trying another position.
- Hold remote control (5) at the same angles at various distances in front of the inside rearview mirror. You should test every position for at least 25 seconds before trying another position.
- Note that some remote controls transmit only for a limited period, press button (6) on remote control (5) again before transmission ends.
- Align the aerial line of the garage door opener unit with the remote control.

ⓘ Support and additional information on programming:

- On the HomeLink® Hotline on (0) 08000 466 354 65 or +49 (0) 6838 907-277.
- On the Internet at http://www.homelink.com.

Opening or closing the garage door

Requirement:
The corresponding button is programmed to operate the garage door.

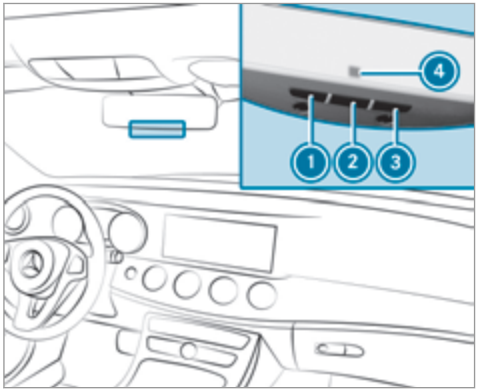

- Press and hold buttons (1), (2) or (3) until the garage door opens or closes.
- If indicator lamp (4) flashes yellow after approximately 20 seconds: press and hold the previously pressed button again until the garage door opens or closes.

Clearing the garage door opener memory

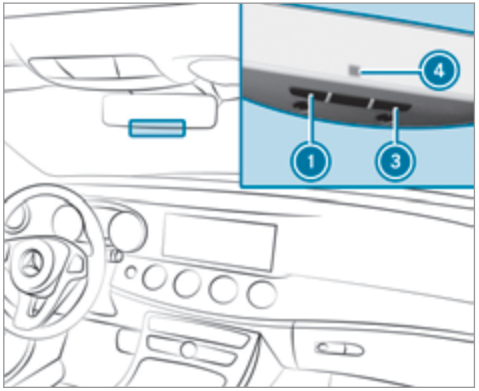

- Press and hold buttons (1) and (3). Indicator lamp (4) lights up yellow.
- If indicator lamp (4) flashes green: release buttons (1) and (3).

Radio equipment approval numbers for the garage door opener

- **Egypt:** TAC.2511151293.WIR
- **Andorra:** CE
- **Australia:** R-NZ
- **Barbados:** MED1578
- **Chile:** 2488/DFRS20576/F-74
- **European Union:** CE
- **Gibraltar:** CE
- **Iceland:** CE
- **Jordan:** TRC/LPD/2015/299
- **Canada:** 4112A-MUAHL5
- **Kuwait:** CE
- **Liechtenstein:** CE
- **Mexico:** RCPGEMU15-0448
- **Monaco:** CE
- **New Zealand:** R-NZ
- **Norway:** CE
- **Russian Federation:** not required
- **Saudi Arabia:** TA 10525
- **Switzerland:** CE
- **South Africa:** TA-2015/1386
- **Turkey:** not required
- **United Arab Emirates:** ER41849/15
- **United States:** NZLMUAHL5

Electric parking brake

Automatically applying the electric parking brake

⚠ **WARNING** Risk of accident and injury due to children left unattended in the vehicle

If you leave children unattended in the vehicle, they may be able to set the vehicle in motion, for example by:

- Releasing the parking brake.
- Shifting the automatic transmission out of park position P or shifting the manual transmission into neutral.
- Starting the engine.

In addition, they may operate vehicle equipment.

▶ Never leave children and animals unattended in the vehicle.

▶ When leaving the vehicle, always take the key with you and lock the vehicle. This also applies to mobile phones if the "Digital Car Key in the smartphone" function is activated via the Mercedes connect me web app.

Vehicles with manual transmission:

The electric parking brake is applied while the vehicle is being kept stationary by the HOLD function if one of the following conditions are fulfilled:

- The engine is switched off.
- The seat belt tongue is not inserted in the seat belt buckle of the driver's seat and the driver's door is opened.
- There is a system malfunction.
- The power supply is insufficient.
- The vehicle is stationary for a lengthy period.

When the electric parking brake is applied, the (P) indicator lamp lights up in the instrument cluster.

The electric parking brake is not automatically applied if the engine is switched off by the ECO start/stop function.

Vehicles with automatic transmission:

The electric parking brake is applied if the transmission is in position P and one of the following conditions is fulfilled:

- The engine is switched off.
- The seat belt tongue is not inserted in the seat belt buckle of the driver's seat and the driver's door is opened.

ⓘ To prevent application: pull the handle of the electric parking brake.

In the following situations, the electric parking brake is also engaged:

- The Distance Pilot DISTRONIC brings the vehicle to a standstill.
- The HOLD function is keeping the vehicle stationary.
- Parking Pilot is keeping the vehicle stationary.

This is only the case if one of the following conditions is also fulfilled:

- The engine is switched off.
- The seat belt tongue is not inserted in the seat belt buckle of the driver's seat and the driver's door is opened.
- There is a system malfunction.
- The power supply is insufficient.
- The vehicle is stationary for a lengthy period.

When the electric parking brake is applied, the (P) indicator lamp lights up in the instrument cluster.

The electric parking brake is not automatically applied if the engine is switched off by the ECO start/stop function.

Releasing the electric parking brake automatically
Vehicles with manual transmission:

The electric parking brake is released when the following conditions are fulfilled:

- The driver's door is closed.
- The engine is running.
- A gear has been selected, you release the clutch pedal and depress the accelerator pedal.
- When the reverse gear R is selected, the boot lid must be closed.

If the electric parking brake is released, the (P) indicator lamp in the instrument cluster goes out.

Vehicles with automatic transmission:

The electric parking brake is released when the following conditions are fulfilled:

- The engine is running.
- The seat belt tongue is inserted into the seat belt buckle of the driver's seat.
- The transmission is in position D or R and you depress the accelerator pedal or you shift from transmission position P to D or R.

- If the transmission is in position R, the boot lid must be closed.

If the seat belt tongue is not inserted into the seat belt buckle of the driver's seat, the following conditions must be fulfilled:

- The driver's door is closed.
- You move the transmission out of transmission position P or you have previously driven faster than 3 km/h.
- If the transmission is in position R, the boot lid must be closed.

If the electric parking brake is released, the (P) indicator lamp in the instrument cluster goes out.

Applying or releasing the electric parking brake manually

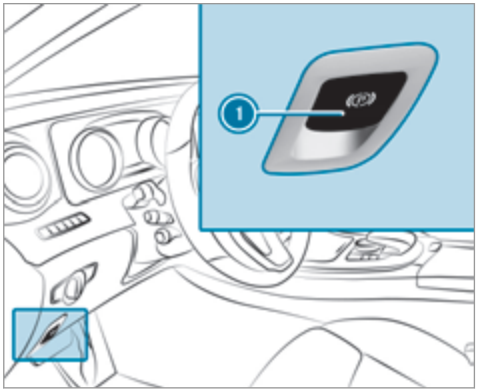

▶ **To apply:** push handle 1.
The (P) indicator lamp appears in the instrument cluster.

▶ **To release:** switch on the ignition.

▶ Pull handle 1.
The (P) indicator lamp in the instrument cluster goes out.

Emergency braking

▶ Press and hold handle 1.

When the vehicle has been braked to a standstill:

- The electric parking brake is applied.
- The (P) indicator lamp appears in the instrument cluster.

Parking up the vehicle

- If you leave the vehicle parked up for longer than four weeks, damage may occur to the battery.
- If you leave the vehicle parked up for longer than six weeks, it may suffer damage as a result of lack of use.
- Information on parking up your vehicle can be obtained at a qualified specialist workshop.

Standby mode

Standby mode function

Standby mode is characterised by the following:

- the vehicle can be parked over a long period of time without losing power.
- the vehicle battery is preserved.
- the maximum period out of use is displayed in the multimedia system display.
- functions such as interior protection or tow-away protection are not available.
- the connection to online services is interrupted.

If the following conditions are fulfilled, standby mode can be activated or deactivated using the multimedia system:

- the engine is switched off.
- the ignition is switched on.

Exceeding the vehicle's displayed period out of use may cause inconvenience, i.e. it cannot be guaranteed that the starter battery will reliably start the engine.

The starter battery must be charged in the following situations:

- the vehicle's period out of use must be extended.
- a message appears in the multimedia system display explaining that the battery charge is insufficient for standby mode.

ⓘ Standby mode is automatically deactivated when the ignition is switched on.

Activating or deactivating standby mode

Multimedia system:

→ Vehicle ▸▸ Vehicle settings ▸▸ Standby mode

▶ Activate or deactivate the function.
When you activate the function, a prompt appears.

▶ Select Yes.
Standby mode is activated.

Driving and driving safety systems

Driving systems and your responsibility

Your vehicle is equipped with driving systems which assist you in driving, parking and manoeuvring the vehicle. The driving systems are aids and do not relieve you of your responsibility. Pay attention to the traffic conditions at all times and intervene when necessary. Be aware of the limitations regarding the safe use of these systems.

Function of the radar sensors

Some driving and driving safety systems use radar sensors to monitor the area in front of, behind or next to the vehicle (depending on the vehicle's equipment).

Depending on the vehicle's equipment, the radar sensors are integrated behind the bumpers and/or behind the radiator grille. Keep these parts free of dirt, ice and slush . The sensors must not be covered, for example by bicycle racks, overhanging loads or radar-reflecting stickers. Following an impact and in the event of

associated damage, which may not be visible, to the bumpers or radiator grille, have the function of the radar sensors checked at a qualified specialist workshop. The driver assistance system may no longer work properly.

Overview of driving systems and driving safety systems

In this section, you will find information about the following driving systems and driving safety systems:

- 360° Camera (→ page 216)
- ABS (**A**nti-lock **B**raking **S**ystem) (→ page 182)
- Distance Pilot DISTRONIC (→ page 196)
- Adaptive brake lights (→ page 193)
- AIR BODY CONTROL (→ page 206)
- Active Brake Assist (→ page 188)
- Active Lane Keeping Assist (→ page 233)
- ATTENTION ASSIST (→ page 230)
- BAS (**B**rake **A**ssist **S**ystem) (→ page 182)
- DYNAMIC BODY CONTROL (→ page 206)
- EBD (**E**lectronic **B**rake force **D**istribution) (→ page 187)
- ESP® (**E**lectronic **S**tability **P**rogram) (→ page 183)
- DRIVE PILOT (→ page 202)
- HOLD function (→ page 204)
- Steering Pilot (→ page 202)
- Limiter (→ page 193)
- Parking Pilot (→ page 219)
- Parking Assist PARKTRONIC (→ page 210)
- Reversing camera (→ page 213)
- Cruise control (→ page 193)
- Blind Spot Assist and Active Blind Spot Assist (→ page 231)

Functions of ABS (anti-lock braking system)

ABS regulates the brake pressure in critical driving situations:

- During braking, the wheels are prevented from blocking, e.g. due to maximum full-stop braking or insufficient traction of the tyres.
- Vehicle steerability while braking is ensured.
- ABS is active from speeds of approx. 8 km/h.

If ABS intervenes when braking, you will feel a pulsing in the brake pedal. The pulsating brake pedal can be an indication of hazardous road conditions and can serve as a reminder to take extra care while driving.

System limits

ABS may be impaired or may not function if a malfunction has occurred and the yellow  ABS warning lamp lights up continuously in the instrument cluster after the engine is started.

Function of BAS (Brake Assist System)

⚠ **WARNING** Risk of an accident caused by a malfunction in BAS (Brake Assist System)

If BAS is malfunctioning, the braking distance may increase in an emergency braking situation.

▶ Depress the brake pedal with full force in emergency braking situations. ABS prevents the wheels from locking.

BAS supports your emergency braking situation with additional brake force.

If you depress the brake pedal quickly, BAS is activated:

- BAS automatically boosts the brake pressure.
- BAS can shorten the braking distance.
- ABS prevents the wheels from locking.

The brakes will function as usual once you release the brake pedal. BAS is deactivated.

Functions of ESP® (Electronic Stability Program)

⚠ WARNING Risk of skidding if ESP® is malfunctioning

If ESP® is malfunctioning, ESP® cannot carry out vehicle stabilisation. In addition, other driving safety systems are switched off.

▶ Drive on carefully.

▶ Have ESP® checked at a qualified specialist workshop.

⚠ WARNING Risk of skidding if ESP® is deactivated

If you deactivate ESP®, ESP® cannot carry out vehicle stabilisation.

▶ ESP® should only be deactivated in the following situations.

ESP® monitors and improves driving stability and traction, particularly in the following situations:

- When pulling away on wet or slippery roads.
- When braking.
- **Vehicles with trailer hitch:** In trailer operation from speeds of 65 km/h, if the vehicle/trailer combination begins to sway from side to side.
- In strong sidewinds when you are driving faster than 80 km/h.

ESP® can stabilise the vehicle by intervening in the following ways:

- One or more wheels are braked.
- The engine output is adapted according to the situation.

ESP® is deactivated if the ESP® OFF  warning lamp lights up continuously in the instrument cluster:

- Driving stability will no longer be improved.
- **Vehicles with trailer hitch:** Stabilisation of the vehicle/trailer combination is no longer active.
- Crosswind Assist is no longer active.
- The drive wheels could spin.

- ETS/4ETS traction control is still active.

ⓘ Even when ESP® is deactivated, you are still assisted by ESP® when braking.

ESP® is intervening if the ESP® warning lamp flashes in the instrument cluster:

- Do not deactivate ESP®.
- Only depress the accelerator pedal as far as is necessary.
- Adapt your driving style to suit the current road and weather conditions.

Deactivate ESP® in the following situations to improve traction:

- When using snow chains.
- In deep snow.
- On sand or gravel.

ⓘ Spinning the wheels results in a cutting action which provides better grip.

ESP® is deactivated if the ESP® OFF warning lamp lights up continuously in the instrument cluster.

If the ESP® warning lamp lights up continuously, ESP® is not available due to a malfunction.

Observe any information which may be displayed in the instrument cluster:

- Warning and indicator lamps (→ page 431)
- Display messages (→ page 375)

ETS/4ETS (Electronic Traction System)

ETS/4ETS traction control is part of ESP®.

ETS/4ETS can improve the vehicle's traction by intervening in the following ways:

- The drive wheels are braked individually if they spin.
- More drive torque is transferred to the wheel or wheels with traction.

Influence of drive programs on ESP®

The drive programs enable ESP® to adapt to different weather and road conditions as well as the driver's preferred driving style. You can select the drive programs using the DYNAMIC SELECT switch.

ESP® characteristics per drive program

Drive program	ESP® mode	Characteristics
C (Comfort) **E** (Economy)	ESP® Comfort	These drive programs provide the ideal balance between traction and stability. Select drive program **E** or **C** in difficult road conditions, such as in snow or ice, or when the road is wet from rain.
S (Sport)	ESP® Sport	This drive program continues to offer stability but with a sporty setup which allows the enthusiastic driver a more active driving style. Only select drive program **S** in good road conditions, for example on dry road surfaces and clear stretches of road.

Drive program	ESP® mode	Characteristics
All vehicles except All-Terrain vehicles: S+ (Sport Plus)	ESP® Sport Plus	The vehicle's own understeering and oversteering characteristics are accentuated. This allows a more active driving style to be adopted. Only select drive program **S+** in good road conditions, for example on dry road surfaces and clear stretches of road.
All-Terrain vehicles: All-Terrain	ESP® All-Terrain	This drive program offers a traction-orientated setting. It functions in the speed range of up to approx. 30 km/h and provides maximum traction. This drive program provides maximum traction particularly on unpaved, very uneven surfaces and easily negotiable off-road terrain. Select the drive program **All-Terrain** when driving on unpaved tracks in easily negotiable off-road terrain or very uneven surfaces.

Activating/deactivating ESP® (Electronic Stability Program)

Multimedia system:

→ Vehicle ›› Assistance ›› Electronic Stability Program

▶ Activate or deactivate the function.

ESP® is deactivated if the ESP® OFF warning lamp lights up continuously in the instrument cluster.

Observe the information on warning lamps and display messages which may be shown in the instrument cluster.

Functions of ESP® Crosswind Assist

ESP® Crosswind Assist detects sudden gusts of side wind and helps the driver to keep the vehicle in the lane:

- ESP® Crosswind Assist is active at vehicle speeds between 80 km/h and 200 km/h when driving straight ahead or cornering slightly.
- The vehicle is stabilised by means of individual brake application on one side.

Functions of ESP® trailer stabilisation

⚠ **WARNING** Risk of accident in poor road and weather conditions

In poor road and weather conditions, the trailer stabilisation cannot prevent lurching of the vehicle/trailer combination. Trailers with a high centre of gravity may tip over before ESP® detects this.

▶ Always adapt your driving style to suit the current road and weather conditions.

When driving with a trailer, ESP® can stabilise your vehicle if the trailer begins to sway from side to side:

- ESP® trailer stabilisation is active above speeds of 65 km/h.
- Slight swaying is reduced by means of a targeted, individual brake application on one side.
- In the event of intense swaying, the engine output is also reduced and all wheels are braked.

ESP® trailer stabilisation may be impaired or may not function if:

- The trailer is not connected correctly or is not detected properly by the vehicle.

Function of EBD (Electronic Brake force Distribution)

EBD is characterised by the following:

- Monitoring and regulating the brake pressure on the rear wheels.
- Improved driving stability when braking, especially on bends.

Function of Active Brake Assist

Active Brake Assist consists of:

- Distance warning function
- Autonomous braking function
- Situation-dependent braking assistance
- **Vehicles with the Driving Assistance package:** Evasive Steering Assist

Active Brake Assist can help you to minimise the risk of a collision with vehicles or pedestrians or to reduce the effects of such a collision.

If Active Brake Assist has detected a risk of collision, you will be warned visually and acoustically.

If you do not react to the visual or acoustic warning, autonomous braking can be initiated in critical situations.

In especially critical situations, Active Brake Assist can initiate autonomous braking directly. In this case, the visual and acoustic warning occurs simultaneously with the braking application.

If you apply the brake yourself in a critical situation or apply the brake during autonomous braking, situation-dependent braking assistance occurs. This increases the brake pressure up to maximum full-stop braking if necessary.

If the autonomous braking function or the situation-dependent braking assistance is triggered, additional preventive measures for occupant protection (PRE-SAFE®) may also be initiated, if the vehicle is equipped with these.

⚠ **WARNING** Risk of an accident caused by limited detection performance of Active Brake Assist

Active Brake Assist cannot always clearly identify objects and complex traffic situations.

In such cases, Active Brake Assist might:

- give an unnecessary warning or brake the vehicle
- not give a warning or not brake the vehicle.

▶ Always pay careful attention to the traffic situation; do not rely on Active Brake Assist alone.

▶ Be ready to brake and take evasive action if necessary.

Also observe the system limits of Active Brake Assist.

The individual subfunctions are available in the following speed ranges:
Distance warning function

The distance warning function issues a warning at speeds:

- From approximately 30 km/h, if over several seconds the distance maintained to the vehicle travelling in front is insufficient for the driven speed. The distance warning lamp then lights up in the instrument cluster .
- From approximately 7 km/h, if your vehicle is critically close to a vehicle or pedestrian. An intermittent warning tone sounds and the distance warning lamp lights up in the instrument cluster .

Brake immediately or take evasive action, provided it is safe to do so.

The distance warning function can aid you in the following situations with an intermittent warning tone and a warning lamp:

	Vehicles travelling in front	Stationary vehicles	Crossing vehicles	Crossing pedestrians	Stationary pedestrians
Vehicles without Driving Assistance package	up to approx. 250 km/h	up to approx. 80 km/h	no reaction	up to approx. 60 km/h	no reaction
Vehicles with Driving Assistance package	up to approx. 250 km/h	up to approx. 100 km/h	up to approx. 70 km/h	up to approx. 70 km/h	up to approx. 70 km/h

Autonomous braking function
The autonomous braking function may intervene at speeds starting from approximately 7 km/h in the following situations:

	Vehicles travelling in front	Stationary vehicles	Crossing vehicles	Crossing pedestrians	Stationary pedestrians
Vehicles without Driving Assistance package	up to approx. 200 km/h	up to approx. 50 km/h	no reaction	up to approx. 60 km/h	no reaction
Vehicles with Driving Assistance package	up to approx. 250 km/h	up to approx. 100 km/h	up to approx. 70 km/h	up to approx. 70 km/h	up to approx. 70 km/h

Situation-dependent braking assistance
Situation-dependent braking assistance may intervene at speeds starting from approximately 7 km/h in the following situations:

	Vehicles travelling in front	Stationary vehicles	Crossing vehicles	Crossing pedestrians	Stationary pedestrians
Vehicles without Driving Assistance package	up to approx. 250 km/h	up to approx. 80 km/h	no reaction	up to approx. 60 km/h	no reaction
Vehicles with Driving Assistance package	up to approx. 250 km/h	up to approx. 100 km/h	up to approx. 70 km/h	up to approx. 70 km/h	up to approx. 70 km/h

Cancelling a brake application of Active Brake Assist

You can cancel a brake application of Active Brake Assist at any time by:

- Depressing the accelerator pedal fully.
- Releasing the brake pedal.

Active Brake Assist cancels the intervention when at least one of the following conditions is fulfilled:

- You manoeuvre to avoid the obstacle.
- There is no longer a risk of collision.
- An obstacle is no longer detected in front of your vehicle.

Evasive Steering Assist

Evasive Steering Assist has the following characteristics:

- Can detect stationary or crossing pedestrians.
- Can assist the driver with additional steering assistance if it detects a swerving manoeuvre.
- Can be activated by an abrupt steering movement during a swerving manoeuvre.
- Can assist during swerving and straightening of the vehicle.
- Can react from a speed of approximately 20 km/h up to a speed of approximately 70 km/h.
- You can prevent the assistance at any time by active steering.

⚠ **WARNING** Risk of an accident despite Evasive Steering Assist

Evasive Steering Assist cannot always clearly identify objects and complex traffic situations.

In addition, the steering support of Evasive Steering Assist is generally not sufficient to avoid a collision.

In such cases Evasive Steering Assist can:

- give an unnecessary warning or provide assistance
- not give a warning or not provide assistance

▶ Always pay careful attention to the traffic situation; do not rely on Evasive Steering Assist alone.

▶ Be ready to brake and take evasive action, if necessary.

▶ Prevent the assistance by actively steering in non-critical driving situations.

▶ Drive at an appropriate speed if pedestrians are close to the path of your vehicle.

Also observe the system limits of Evasive Steering Assist.

System limits

Active Brake Assist may be impaired or may not function in the following situations:

- In snow, rain, fog, heavy spray, if there is glare, in direct sunlight or in greatly varying light conditions.
- If the sensors are dirty, misted up, damaged or covered.

- If the sensors malfunction due to other radar source interference, for example strong radar reflections in multi-storey car parks.
- If a loss of tyre pressure or a defective tyre has been detected and displayed.

The system may not react correctly:

- In complex traffic stations where objects cannot always be clearly identified.
- To pedestrians or vehicles if they move quickly into the sensor detection range.
- To pedestrians who are hidden by other objects.
- If the typical outline of a pedestrian cannot be distinguished from the background.
- If a pedestrian is not recognised as such, e.g. due to special clothing or other objects.
- On bends with a tight radius.

Setting Active Brake Assist

Multimedia system:

↳ Vehicle ⏩ Assistance ⏩ Active Brake Assist

Vehicles without Driving Assistance package: The settings can be made after starting the vehicle.

Vehicles with Driving Assistance package: The settings can be made when the ignition is switched on.

ⓘ It is recommended that you always leave Active Brake Assist switched on.

The moment of warning or intervention can be adjusted as follows:

- **Select** Warning/brake applic.: early: your selection is retained when the vehicle is next started.
- **Select** Warn./brake applic.: medium: your selection is retained when the vehicle is next started.
- **Select** Warning/brake applic.: late: your selection is retained when the vehicle is next started.
- **Select** Warning/brake applic.: off:
  Vehicles without Driving Assistance package: The distance warning function and the autonomous braking function are deactivated. When the vehicle is next started, the medium setting is automatically selected.
  Vehicles with Driving Assistance package: The distance warning function and the autonomous braking function are deactivated. Evasive Steering Assist is unavailable. When the ignition is next started, the medium setting is selected automatically and Evasive Steering Assist is available.

ⓘ When Active Brake Assist is deactivated, the OFF symbol appears in the assistance graphic in the multifunction display.

Function of Adaptive Brake Lights

Adaptive Brake Lights warn following traffic in an emergency braking situation:

- by flashing brake lamps
- by activating the hazard warning lights

Adaptive Brake Lights have the following characteristics:

- If you brake sharply at a speed above 50 km/h, or if braking is assisted by BAS or Active Brake Assist, the brake lamps flash rapidly. This provides traffic travelling behind you with an even more noticeable warning.
- If you brake sharply to a standstill from a speed above 70 km/h, the hazard warning lights are activated automatically once the vehicle is stationary. The brake lamps light up again constantly when you depress the brake pedal. The hazard warning lights switch off automatically when you drive faster than 10 km/h. You can also switch off the hazard warning lights using the hazard warning button.

The vehicle is braked considerably when moving faster than 50 km/h:

- Brake Assist System (BAS) and Active Brake Assist support you during braking.
- Brake Assist activates the Adaptive Brake Lights.
- The brake lamps flash rapidly.

Cruise control and limiter

Function of cruise control

Cruise control accelerates and brakes the vehicle automatically in order to maintain a previously stored speed.

If you accelerate to overtake, for example, the stored speed is not deleted. If you remove your foot from the accelerator pedal after overtaking, cruise control will resume speed regulation back to the stored speed.

You can operate cruise control with the cruise control lever.

If you fail to adapt your driving style, cruise control can neither reduce the risk of an accident nor override the laws of physics. It cannot take into account road, weather or traffic conditions. Cruise control is only an aid. You are responsible for the distance to the vehicle in front, for vehicle speed, for braking in good time and for staying in lane.

System limitations

Cruise control may be unable to maintain the stored speed on uphill gradients. The stored speed is resumed when the gradient evens out.

Do not use cruise control in the following situations:

- in traffic situations which require frequent changes of speed, e.g. in heavy traffic, on winding roads
- on slippery roads. Accelerating can cause the drive wheels to lose traction and the vehicle could then skid
- when visibility is poor

Function of the limiter

The limiter restricts the speed of the vehicle. To reduce the speed swiftly to the set speed, the limiter applies the brakes automatically.

You can limit the speed as follows:

- Variable: for speed limits, e.g. in built-up areas.
- Permanent: for long-term speed restrictions, e.g. when driving with winter tyres fitted.

If you fail to adapt your driving style, the limiter can neither reduce the risk of an accident nor override the laws of physics. It cannot take into account road, weather or traffic conditions. The limiter is only an aid. You are responsible for the distance to the vehicle in front, for vehicle speed, for braking in good time and for staying in lane.

You can operate the variable limiter with the cruise control lever. You can store any road speed above 20 km/h. You can also perform settings while the vehicle is stationary if the vehicle has been started.

Kickdown

If you depress the accelerator pedal beyond the pressure point (kickdown), the limiter is switched to passive mode. The Limiter passive message appears in the multifunction display.

After completion of kickdown, the variable limiter is activated again in the following situations:

- if the driven speed drops below the stored speed.
- if the stored speed is called up.
- if you store a new speed.

Operating cruise control or the variable limiter

⚠ **WARNING** Risk of accident due to unknown stored speed

If you call up the stored speed and this is lower than your current speed, the vehicle decelerates.

If you do not know the stored speed, the vehicle could decelerate unexpectedly.

▶ Take into account the traffic situation before calling up the stored speed.

▶ If the stored speed is not known, store the desired speed again.

Change into a lower gear in good time on long and steep downhill gradients. Take particular note of this when driving a laden vehicle. By doing so, you will make use of the braking effect of the engine. This relieves the load on the brake system and prevents the brakes from overheating and wearing too quickly.

Requirements:

Cruise control

- Cruise control is selected.
- ESP® must be switched on, but not intervening.
- The driving speed must be at least 20 km/h.

Variable Limiter

- The vehicle has been started.
- The variable limiter is selected.

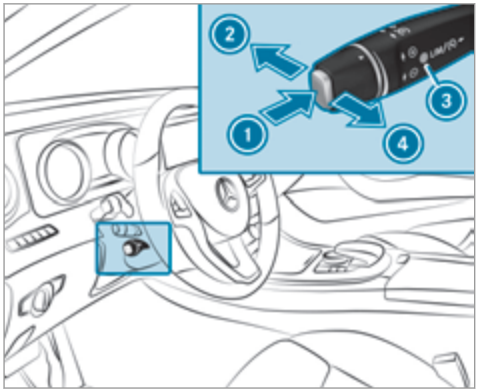

- To switch between cruise control and variable limiter (1).
  - LIM indicator lamp (3) off: cruise control is selected.
  - LIM indicator lamp (3) on: the variable limiter is selected.
- To store current speed (4) (once after starting the vehicle).

or

- To call up last speed stored (4).
- To deactivate cruise control or variable limiter (2).

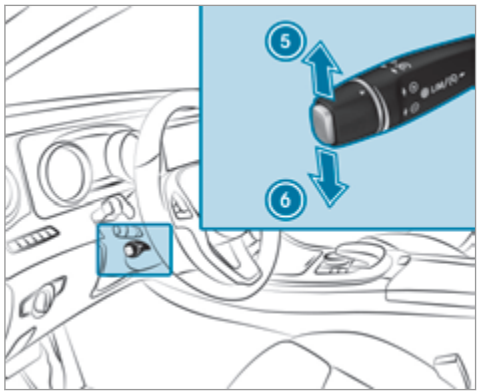

- Press the lever briefly: stored speed is increased (5) or reduced (6) by 1 km/h.

or

- Press and hold the lever: stored speed is increased (5) or reduced (6) in 1 km/h increments.

or

- Press the lever beyond the pressure point: stored speed is increased (5) or reduced (6) by 10 km/h.

or

- Press and hold the lever beyond the pressure point: stored speed is increased (5) or reduced (6) in 10 km/h increments.

If cruise control or the variable limiter has been deactivated, the current speed is stored with (5) or (6).

ⓘ Vehicles with manual transmission: if the engine speed is very low, cruise control or the limiter is deactivated. When the engine speed approaches the maximum engine speed, or neutral is engaged or the clutch pedal is depressed for longer than six seconds, cruise control is deactivated.

ⓘ On vehicles with a segment display in the speedometer, the segments extending from the current stored speed to the end of the scale light up. If you have activated the permanent limiter and a speed is stored, the segments extending up to the stored speed light up.

ⓘ If you perform a kickdown, the variable limiter is switched to passive mode. The variable limiter is operational again once the speed drops below the stored speed.

ⓘ If you brake, deactivate ESP® or if ESP® intervenes, cruise control is deactivated. The variable limiter is not deactivated.
When you switch off the vehicle, the last speed stored is cleared.

Permanent limiter

If you wish to limit the speed permanently to a specific value (e.g. for driving on winter tyres), you can set this speed with the permanent limiter.

You do this by limiting the speed to a value between 160 km/h and 240 km/h in the multimedia system (→ page 196).

Shortly before the set speed is reached, it appears in the multifunction display. When you confirm the message with ⮌, display messages no longer appear until you switch off the vehicle. The speed will only be displayed again once the vehicle has been restarted.

The permanent limiter does not switch to passive mode even during kickdown and the driven speed remains below the set speed.

Setting the speed limit for winter tyres

Multimedia system:

↳ Vehicle » Vehicle settings » Limit speed, winter tyres

▶ Select the speed or deactivate the function.

Distance Pilot DISTRONIC

Function of Distance Pilot DISTRONIC

Distance Pilot DISTRONIC:

- Maintains the set speed and accelerates or decelerates the vehicle if the distance from the vehicle in front permits.
- Assists you in maintaining the distance from the vehicle in front and can bring your vehicle to a standstill if necessary.
- Brakes your vehicle with up to 50 % of the maximum possible braking power. If greater deceleration performance is required, a visual and acoustic warning is given and you must then intervene yourself.
- **Vehicles with Driving Assistance Package:** Responds in urban speed ranges to stationary vehicles (except bicycles, motorcycles and pedestrians) if conditions are sufficient to enable detection.

If you fail to adapt your driving style, Distance Pilot DISTRONIC can neither reduce the risk of an accident nor override the laws of physics. Distance Pilot DISTRONIC cannot take into account road, weather or traffic conditions. Distance Pilot DISTRONIC is only an aid. You are responsible for the distance to the vehicle in front, for vehicle speed, for braking in good time and for staying in lane.

If all activation conditions are met, you can activate Distance Pilot DISTRONIC during a journey

or while stationary. When Distance Pilot DISTRONIC is activated, a speed is stored which the driver can increase or reduce at any time. The speed can be adjusted between 20 km/h and 200 km/h.

Vehicles with the Driving Assistance Package: The speed can be adjusted between 20 km/h and 210 km/h.

Vehicles with the Driving Assistance Package: In conjunction with navigation systems, Distance Pilot DISTRONIC prevents prohibited overtaking on the right at speeds over 80 km/h in right-hand traffic and overtaking on the left in left-hand traffic on motorways and high-speed major roads.

Distance Pilot DISTRONIC uses information from the navigation system to respond to certain traffic situations:

- Roundabouts
- T junctions
- Motorway exits
- Tollbooth

Even if the vehicle in front leaves the detection range in these situations, Distance Pilot DISTRONIC temporarily maintains the current driving speed and does not accelerate.

If you activate the turn signal indicator to change lanes, the vehicle will accelerate more briskly to the set speed under the following conditions:

- Distance Pilot DISTRONIC is activated.
- If the driving speed is higher than 70 km/h.
- If the driven speed drops below the stored speed.
- If the traffic situation in the overtaking lane permits a safe lane change.

Drive program
The DYNAMIC SELECT switch allows you to change the driving style of Distance Pilot DISTRONIC. Depending on which drive program is selected, the driving characteristics can be geared towards fuel economy, comfort or dynamic performance (→ page 162).

System limits
Distance Pilot DISTRONIC is active in the 0 km/h to 200 km/h speed range.

Vehicles with the Driving Assistance Package: Distance Pilot DISTRONIC is active in the 0 km/h to 210 km/h speed range.

The system may be impaired or may not function in the following situations:

- In snow, rain, fog, heavy spray, if there is glare, in direct sunlight or in greatly varying light conditions.
- If the windscreen in the area of the camera is dirty, misted up, damaged or covered.
- If the radar sensors are dirty or covered.

Do not use Distance Pilot DISTRONIC in the following situations:

- In road and traffic conditions which do not allow you to maintain a constant speed, e.g. in heavy traffic or on winding roads.
- On slippery roads. Braking or accelerating can cause the drive wheels to lose traction and the vehicle could then skid.
- When there is poor visibility, e.g. due to fog, heavy rain or snow.
- In multi-storey car parks or at toll stations.

- On roads with steep uphill or downhill gradients.

Tips

Pay particular attention in the following traffic situations. In such situations, brake if necessary. Distance Pilot DISTRONIC is then deactivated:

- When cornering, entering and exiting a bend.
- When not driving in the centre of the lane.
- When other vehicles are changing lane.
- If there are narrow vehicles.
- If there are obstacles and stationary vehicles.
- If there are crossing vehicles, pedestrians, motorcyclists or cyclists.

Display of Distance Pilot DISTRONIC in the assistance graphic and in the speedometer

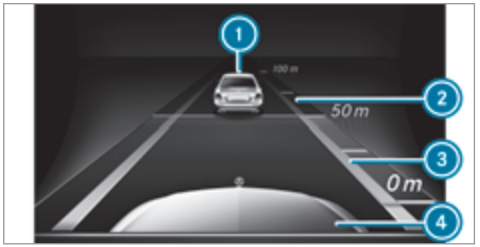

1 Vehicle ahead
2 Distance indicator
3 Set specified distance
4 Own vehicle



1 Speed of vehicle ahead
2 Stored speed

Displays in the multifunction display

When activating Distance Pilot DISTRONIC or when changing the stored speed, the new stored speed is shown for around five seconds in the multifunction display 70 km/h.

When Distance Pilot DISTRONIC is active, the set stored speed is displayed next to the symbol. When distance control is active, the symbol is shown in green.

Vehicles with the Driving Assistance Package: On motorways or high-speed major roads

the  symbol is displayed cyclically when the vehicle is ready to pull away.

Operating Distance Pilot DISTRONIC

⚠ **WARNING** Risk of accident if detection function of Distance Pilot DISTRONIC is impaired

The Distance Pilot DISTRONIC does not react:

- to people or animals
- to stationary obstacles on the road, e.g. stopped or parked vehicles (vehicles without the Driving Assistance Package)
- to stationary obstacles on the road, e.g. stopped or parked vehicles, if conditions are not sufficient to enable detection (vehicles with the Driving Assistance Package)
- to oncoming vehicles and crossing traffic

As a result, Distance Pilot DISTRONIC may neither give warnings nor intervene in such situations.

▶ Always carefully observe the traffic conditions and be ready to brake at all times.

⚠ **WARNING** Risk of accident due to limited detectability of road users and traffic situations

Distance Pilot DISTRONIC cannot always clearly identify other road users and complex traffic situations.

In these conditions, Distance Pilot DISTRONIC may:

- give an unnecessary warning and then brake the vehicle
- neither give a warning nor intervene
- accelerate or brake unexpectedly

▶ Continue driving with care and be ready to brake, particularly if Distance Pilot DISTRONIC warns you.

⚠ **WARNING** Risk of accident due to insufficient deceleration by Distance Pilot DISTRONIC

Distance Pilot DISTRONIC brakes your vehicle with up to 50% of the maximum possible braking power. If this deceleration is not sufficient, Distance Pilot DISTRONIC alerts you with a visual and acoustic warning.

▶ Apply the brakes yourself in these situations and try to take evasive action.

⚠ **WARNING** Risk of accident due to Distance Pilot DISTRONIC still being activated when you leave the driver's seat

If you leave the driver's seat while the vehicle is being braked by Distance Pilot DISTRONIC only, it can roll away in the following situations:

- If there is a malfunction in the system or in the power supply.

- If Distance Pilot DISTRONIC is deactivated with the cruise control lever, e.g. by a vehicle occupant or from outside the vehicle.
- If the electrics in the engine compartment, the battery or the fuses are tampered with.
- If the battery is disconnected.
- If the vehicle is accelerated, e.g. by a vehicle occupant.

▶ Always deactivate Distance Pilot DISTRONIC and secure the vehicle to prevent it from rolling away before you leave the driver's seat.

⚠ **WARNING** Risk of accident due to unknown stored speed

If you call up the stored speed and this is lower than your current speed, the vehicle decelerates.

If you do not know the stored speed, the vehicle could decelerate unexpectedly.

▶ Take into account the traffic situation before calling up the stored speed.

▶ If the stored speed is not known, store the desired speed again.

⚠ **WARNING** Risk of accident due to unexpected acceleration by Distance Pilot DISTRONIC

If Distance Pilot DISTRONIC no longer detects a vehicle in front, it may unexpectedly accelerate to the speed stored.

- This speed may be too high for a filter lane or a slip road.
- If driving in the right lane, this speed may be so high that you pass vehicles driving on the left (in countries where traffic drives on the right).
- If driving in the left lane, this speed may be so high that you pass vehicles driving on the right (in countries where traffic drives on the left).

Always carefully observe the traffic conditions and be ready to brake at all times.

⚠ **WARNING** Risk of accident due to Distance Pilot DISTRONIC pulling away automatically

If Distance Pilot DISTRONIC performs an automatic driving-off procedure, the vehicle may accelerate unexpectedly.

Where necessary, brake the vehicle yourself and take evasive action.

Requirements:

- The vehicle has been started.
- The electric parking brake is released.
- Parking Pilot is not being used to park the vehicle or to exit from a parking space.
- ESP® is activated, but is not intervening.
- The transmission is in position D.
- The driver's door, front passenger door and the rear doors are closed.
- The engine bonnet is closed.

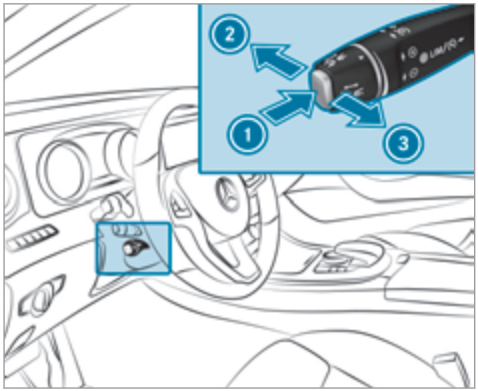

- If the LIM indicator lamp is lit: to select Distance Pilot DISTRONIC (1).
- Remove your foot from the accelerator pedal.
- To store current speed (3).
  Your vehicle adapts its speed to that of the vehicle in front, but only up to the stored speed.

or

- To call up stored speed (3).
- To deactivate Distance Pilot DISTRONIC (2).

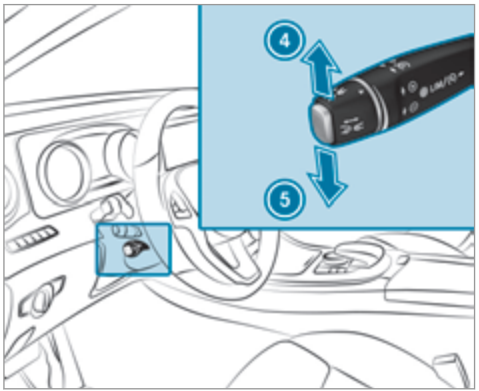

- To increase (4) or reduce (5) the speed.

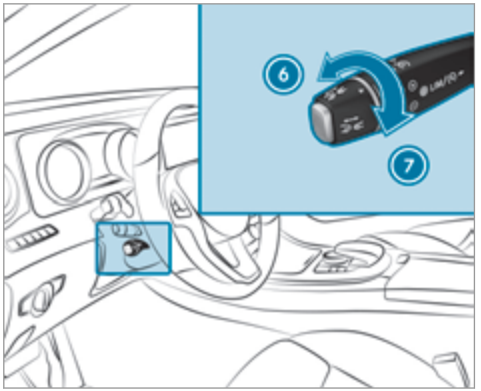

- To reduce (6) or increase (7) the specified distance from the vehicle in front.

Pulling away with Distance Pilot DISTRONIC
Requirement

A speed has been previously stored.

- Remove your foot from the brake pedal.
- Briefly pull the cruise control lever towards you (3).

or

- Accelerate briefly.
  Your vehicle pulls away and adapts its speed to that of the vehicle in front. If no vehicle is detected in front, your vehicle accelerates to the set speed.

Collision warning
If Distance Pilot DISTRONIC is unable to sufficiently decelerate the vehicle in order to prevent it from approaching the vehicle in front, you will be warned visually and acoustically. An intermittent warning tone will then sound and the distance warning lamp will light up in the instrument cluster.

- Brake immediately in order to increase the distance from the vehicle in front.

or

- Take evasive action provided it is safe to do so.

Function of DRIVE PILOT

The DRIVE PILOT function is available only on vehicles with the Driving Assistance package.

DRIVE PILOT includes the following driving and driving safety systems:

- Steering Pilot (→ page 202)
- Distance Pilot DISTRONIC (→ page 196)

Steering Pilot

Function of Steering Pilot
Steering Pilot is only available for vehicles with the Driving Assistance Package.

- Steering Pilot is operational at speeds up to 210 km/h and helps you to stay in the centre of the lane by means of moderate steering interventions.
- It uses as a reference the vehicle in front or the lane markings, depending on the driven speed.
- Steering Pilot requires you as the driver, to keep your hands on the steering wheel at all times so that you are able to intervene at any time to correct the course of the vehicle and keep it in lane.
- Steering Pilot can be overridden at any time by steering the vehicle yourself.
- If the system detects that there are no lane markings, it uses the vehicle ahead as a reference up to a speed of 130 km/h.
- When the system is actively steering, the  symbol is shown in green in the multifunction display.

Steering Pilot system limits
Steering Pilot has a limited steering torque for lateral guidance. In some cases, the steering intervention is not sufficient to keep the vehicle in the lane.

If detection of lane markings and vehicles ahead is impaired, Steering Pilot switches to passive mode. The system provides no support in this case. During the transition from the active to passive status, the symbol is shown as enlarged and flashes yellow. Once the system is passive the symbol is shown as grey in the multifunction display.

The system may be impaired or may not function in the following situations:

- If there is poor visibility, e.g. due to insufficient illumination of the road, or due to snow, rain, fog or spray.
- If there is glare, e.g. from oncoming traffic, direct sunlight or reflection from other vehicles (e.g. if the road surface is wet).
- If the windscreen is dirty, misted up, damaged or covered, for instance by a sticker, in the vicinity of the camera.
- If no, or several, unclear lane markings are present for one lane, e.g. in a construction area.
- If the lane markings are worn away, dark or covered up, e.g. by dirt or snow.
- If the distance to the vehicle in front is too small and the lane markings thus cannot be detected.
- If the lane markings change quickly, e.g. lanes branch off, cross one another or merge.
- If the road is narrow and winding.
- If there are highly variable shade conditions on the road.
- If there are obstacles such as traffic guidance posts on the lane or projecting out into the lane.

The system does not provide assistance in the following conditions:

- On very sharp bends.
- When towing a trailer.
- If you actively change lane without switching on the turn signal indicator.

Information on the Steering Pilot

Steering Pilot is only an aid. You are responsible for the distance to the vehicle in front, for vehicle speed, for braking in good time and for staying in lane. Before changing lanes, make sure that the neighbouring lane is free (shoulder view).

Steering and contact detection

Steering Pilot requires you as the driver, to keep your hands on the steering wheel at all times so that you are able to intervene at any time to correct the course of the vehicle and keep it in lane. The driver must expect a change from active to passive mode or vice versa at any time.



If you are not steering yourself or if you take your hands off the steering wheel for a prolonged period of time, the system will, depending on the situation, first alert you with a visual warning. 1 appears in the multifunction display. If you are still not steering the vehicle yourself or if you have not taken hold of the steering wheel, a warning tone sounds in addition to the warning message to remind you to take control of the vehicle.

The warning message does not appear or disappears if one of the following conditions are met:

- The driver steers the vehicle.
- The driver presses a steering wheel button or operates Touch Control.

Active Emergency Stop Assist

If the driver continues to ignore the acoustic warning, Distance Pilot DISTRONIC reduces the speed. If the driver still does not respond, the vehicle is decelerated in stages to a standstill.

The driver can cancel the deceleration at any time by performing one of the following actions:

- Steering
- Braking or accelerating
- Pressing a steering wheel button or operating Touch Control
- Activating or deactivating Steering Pilot or Distance Pilot DISTRONIC

The driver must be ready to take control of the vehicle at any time.

Activating Steering Pilot

Requirements:

- ESP® must be switched on, but not intervening.
- Distance Pilot DISTRONIC must be activated.

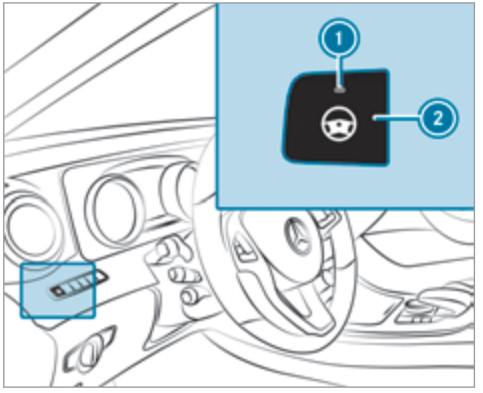

▶ If indicator lamp 1 is off: press button 2.

Information on Hill Start Assist

Hill Start Assist holds the vehicle when pulling away on a hill under the following conditions:

- **Vehicles with automatic transmission:** The transmission is in position D or R.
- The electric parking brake is released.

⚠ **WARNING** Risk of accident and injury caused by the vehicle rolling away

After a short time, Hill Start Assist no longer holds the vehicle and it can roll away.

▶ Therefore, swiftly move your foot from the brake pedal to the accelerator pedal. Never attempt to leave the vehicle if it is being held by Hill Start Assist.

HOLD function

HOLD function

The HOLD function holds the vehicle at a standstill without requiring you to depress the brake pedal, such as when pulling away on steep slopes.

System limits
The incline must not be greater than 30%.

Activating/deactivating the HOLD function

⚠ **WARNING** Risk of an accident due to the HOLD function being active when you leave the vehicle

If you leave the vehicle while only the HOLD function is braking the vehicle, the vehicle can roll away in the following situations:

- If there is a malfunction in the system or in the power supply.
- If the HOLD function is deactivated by depressing the accelerator pedal or the brake pedal, e.g. by a vehicle occupant.
- If the electrics in the engine compartment, the battery or the fuses are tampered with.
- If the battery is disconnected.

▶ Always deactivate the HOLD function and secure the vehicle against rolling away before leaving the vehicle.

! **NOTE** Damage from automatic braking

If Active Brake Assist, Distance Pilot DISTRONIC or the HOLD function is activated, the vehicle brakes automatically in certain situations.

To avoid damage to the vehicle, deactivate these systems in the following or similar situations:

▶ During towing
▶ In a car wash

Requirements:

- The vehicle is stationary.
- The driver's door is closed or the seat belt on the driver's side is fastened.
- The engine is running or has been automatically switched off by the ECO start/stop function.
- The electric parking brake is released.
- Distance Pilot DISTRONIC is not activated.
- **Vehicles with automatic transmission:** The transmission is in position D, R or N.

Activating the HOLD function

▶ Depress the brake pedal and after a short time depress further until the HOLD display appears in the multifunction display.
▶ Release the brake pedal.

Deactivating the HOLD function

▶ Depress the accelerator pedal to pull away.

or

▶ Depress the brake pedal until the HOLD display disappears from the multifunction display.

The HOLD function is deactivated in the following situations:

- If Distance Pilot DISTRONIC has been activated.
- **Vehicles with automatic transmission:** When transmission position P is selected.
- When the vehicle is secured with the electric parking brake.

In the following situations, the vehicle is held by the transmission position P or by the electric parking brake:

- When the seat belt is unfastened and the driver's door is opened.
- When the engine is switched off.
- When there is a malfunction in the system or if the power supply is insufficient.

Vehicles with manual transmission:

The Brake immediately message may also appear in the multifunction display:

▶ Immediately depress the brake pedal firmly until the warning message disappears. The HOLD function is deactivated.

A horn sounds at regular intervals if you turn off the engine, remove your seat belt and open the driver's door while the HOLD function is activated. If you attempt to lock the vehicle, the horn tone becomes louder. The vehicle cannot be locked until you have deactivated the HOLD function.

ⓘ Once you have switched off the engine, you cannot restart the engine until you have deactivated the HOLD function.

DYNAMIC BODY CONTROL

DYNAMIC BODY CONTROL has the following characteristics:

- Variable damping characteristics
- Continual adjustment of the damping forces

The damping characteristics adapt to the current operating and driving situation.

The damping is tuned individually for each wheel and is affected by the following factors:

- The road surface conditions
- The drive program selected
- Vehicle load

The drive program can be adjusted using the DYNAMIC SELECT switch.

AIR BODY CONTROL

AIR BODY CONTROL function

AIR BODY CONTROL is an air suspension system with variable damping for improved driving comfort. The all-round level control system ensures the best possible suspension and constant ground clearance, even with a laden vehicle. When driving at speed, the vehicle is lowered automatically to improve driving safety and to reduce fuel consumption. The option of manually adjusting the vehicle level is also available.

AIR BODY CONTROL comprises:

- Air suspension with variable spring rate
- Automatic level control system
- Speed-dependent lowering to reduce fuel consumption
- Manual level adjustment
- ADS PLUS (Adaptive Damping System with constant damping force adjustment)
- DYNAMIC SELECT switch and level button

Available suspension settings

Drive program	Characteristics
C (Comfort)	• Comfortable suspension tuning • Normal level • When driving at speeds above 125 km/h, the vehicle is lowered by 15 mm • When driving at speeds below 80 km/h, the vehicle is raised again by 15 mm
E (Economy)	• Comfortable suspension tuning • The vehicle is lowered by 15 mm compared to the normal level • The vehicle is not lowered any further if you are travelling at higher speeds
S (Sport)	• Firmer suspension tuning • The vehicle is lowered by 15 mm compared to the normal level • The vehicle is not lowered any further if you are travelling at higher speeds

Drive program	Characteristics
All vehicles except All-Terrain vehicles: S+ (Sport Plus)	• Even firmer suspension tuning • The vehicle is lowered by 15 mm compared to the normal level • The vehicle is not lowered any further if you are travelling at higher speeds
All-Terrain vehicles: AT (All-Terrain)	• Suspension tuning for easily negotiable offroad terrain • The vehicle is raised by 20 mm compared to the normal level • When driving at speeds above 35 km/h, the vehicle is lowered by 20 mm • When driving at speeds below 20 km/h, the vehicle is raised again

Setting the vehicle level

⚠ **WARNING** Risk of accident because vehicle level is too high

If you drive at a higher vehicle level, the driving characteristics may be impaired due to the higher vehicle centre of gravity.

The vehicle may tip over more quickly on a bend, for example.

▶ Always select as low a vehicle level as possible and adapt your driving style accordingly.

⚠ **WARNING** Risk of entrapment from vehicle lowering

When lowering the vehicle, other people could become trapped if their limbs are between the vehicle body and the tyres or underneath the vehicle.

▶ Make sure no one is underneath the vehicle or in the immediate vicinity of the wheel arches when you lower the vehicle.

⚠ **WARNING** Risk of entrapment from vehicle lowering

Vehicles with AIR BODY CONTROL or level control system: When you unload luggage or leave the vehicle, the vehicle first

rises slightly and then returns to the set level shortly afterwards.

You or anyone else in the vicinity of the wheel arches or the underbody could thus become trapped.

The vehicle can also be lowered after being locked.

▶ When leaving the vehicle, make sure that nobody is in the vicinity of the wheel arches or the underbody.

Requirements:

- The vehicle's engine must be switched on.
- **All vehicles except All-Terrain vehicles:** The vehicle must not be moving faster than 60 km/h.
- **All-Terrain vehicles:** The vehicle must not be moving faster than 35 km/h.

Raising the vehicle

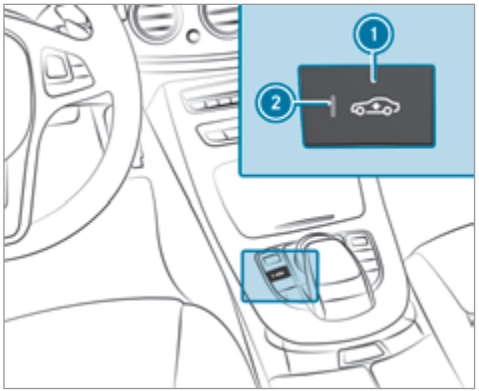

▶ Press button 1.
Indicator lamp 2 lights up.

All vehicles except All-Terrain vehicles: The vehicle is raised by 25 mm compared to the normal level.

All-Terrain vehicles: The vehicle is raised by 20 mm compared to the normal level.

Your selection is saved.

ⓘ In drive program **All-Terrain**, The vehicle cannot be raised further by using button 1.

The vehicle is lowered again in the following situations:

- **All vehicles except All-Terrain vehicles:** When driving faster than 100 km/h.
- **All vehicles except All-Terrain vehicles:** When driving between 80 km/h and 100 km/h for approximately three minutes.
- **All-Terrain vehicles:** When driving faster than 35 km/h.
- After selecting a drive program using the DYNAMIC SELECT switch.

The vehicle is adjusted to the height of the last active drive program.

Lowering the vehicle

▶ Press button 1.
Indicator lamp 2 goes out. The vehicle is adjusted to the height of the last active drive program.

Parking Assist PARKTRONIC

Functions of Parking Assist PARKTRONIC

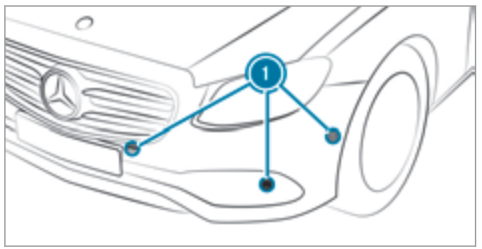

Parking Assist PARKTRONIC is an electronic parking assistance system with ultrasound. It monitors the area around your vehicle using six sensors (1) in the front bumper and six sensors in the rear bumper. Parking Assist PARKTRONIC indicates visually and audibly the distance between your vehicle and an object.

Parking Assist PARKTRONIC is only an aid. It is not a substitute for your attention to the surroundings. The responsibility for safe manoeuvring and parking remains with you. Make sure that there are no persons, animals or objects in the manoeuvring area while manoeuvring and parking in/exiting parking spaces.

In the standard setting, an intermittent warning tone sounds from a distance of approximately 0.3 m to an obstacle. A continuous tone sounds from a distance of approximately 0.2 m. You can set the warning tone in the multimedia system so that it will sound earlier at a greater distance of approximately 1.0 m (→ page 212).

If Parking Assist PARKTRONIC is deactivated, Parking Pilot is unavailable.

Parking Assist PARKTRONIC display in the multimedia system

If Parking Pilot is deactivated and an obstacle is detected in the path of the vehicle, a pop-up window for Parking Assist PARKTRONIC (1) appears in the multimedia system at speeds up to approximately 10 km/h.

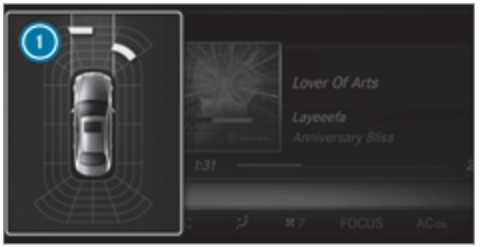

Vehicles with Parking Pilot and reversing camera

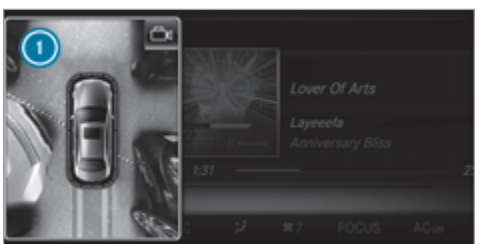

Vehicles with Parking Pilot and 360° Camera

System limitations

Parking Assist PARKTRONIC does not necessarily take into account the following obstacles:

- Obstacles below the detection range, e.g. persons, animals or objects.
- Obstacles above the detection range, e.g. overhanging loads, overhangs or loading ramps of lorries.

The sensors must be free of dirt, ice and slush. Otherwise, they may not function correctly. Clean the sensors regularly, taking care not to scratch or damage them.

Vehicles with trailer hitch: Parking Assist PARKTRONIC is deactivated for the rear zone when you establish an electrical connection between your vehicle and a trailer.

Passive side impact protection

Passive side impact protection is an additional Parking Assist PARKTRONIC function which warns the driver about obstacles at the side of the vehicle. A warning is issued when obstacles are detected between the front and rear detection range. In order for an object to be detected, the sensors in the front and rear bumper must detect the object while you are driving past it.

During the parking procedure or manoeuvring, objects are detected as the vehicle drives past. If you steer in the direction of a detected obstacle and there is a risk of a lateral collision, a warning is issued. The lateral segments light up orange or red, depending on the distance to the obstacle.

Colour	Lateral distance in cm
Red	< 30
Orange	30 - 60

In order for lateral front or rear segments to be displayed, the vehicle must first travel a distance of at least half of the vehicle length. Once the vehicle has travelled the length of the vehicle, all of the lateral front and rear segments can be displayed.

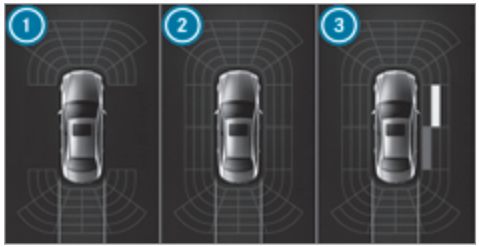

1. Parking Assist PARKTRONIC is only operational in the front and rear
2. Parking Assist PARKTRONIC is operational and can also warn the driver about obstacles at the side of the vehicle
3. Obstacle detected at the front right (orange) and rear (red)

When you switch off the ignition, the stored obstacles are deleted. After the engine is restarted, obstacles must be detected again, before a new warning can be issued.

System limitations
The system limitations for Parking Assist PARKTRONIC apply for passive side impact protection.

Objects placed next to the vehicle, or pedestrians who approach the side of the vehicle will not be detected.

Deactivating/activating PARKTRONIC

NOTE Risk of an accident from objects at close range

Parking Assist PARKTRONIC may not detect certain objects at close range.

- When parking the vehicle, pay particular attention to any objects which are above or below the sensors, e.g. flowerpots or drawbars. The vehicle or other objects could otherwise be damaged.

If indicator lamp (1) is not lit, Parking Assist PARKTRONIC is active. If the indicator lamp is lit or the OFF symbol appears in the multifunction display, Parking Assist PARKTRONIC is not active.

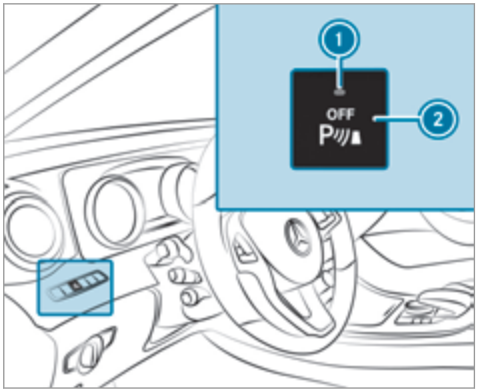

- Press button (2).

ⓘ Depending on the vehicle's equipment, the button may also be located in the centre console.

ⓘ Parking Assist PARKTRONIC is automatically activated when the vehicle is started.

Adjusting the warning tones of Parking Assist PARKTRONIC
Multimedia system:
Vehicle ▸▸ System settings ▸▸ Parking Pilot ▸▸ Set warning tone

Adjusting the volume of the warning tones
- Select Warning tone volume.
- Adjust the value.

Adjusting the pitch of the warning tones
- Select Warning tone pitch.
- Adjust the value.

Specifying the starting point for the warning tones
You can specify whether the Parking Assist PARKTRONIC warning tones should commence when the vehicle is further away from an obstacle.
- Select Warn early.
- Activate ☑ or deactivate ☐ the function.

Activating/deactivating audio fadeout
You can specify whether the volume of a media source in the multimedia system is to be reduced when Parking Assist PARKTRONIC gives an audible warning.

- Select Audio fadeout during warning tones.
- Activate ☑ or deactivate ☐ the function.

Reversing camera

Function of the reversing camera

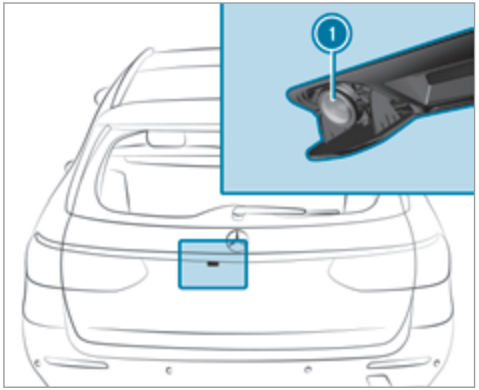

If you have activated the function in the multimedia system, the image from reversing camera (1) is displayed in the multimedia system when reverse gear is selected. Dynamic guide lines show the path the vehicle will take with the steering wheel in its current position. This helps you to orientate yourself and to avoid obstacles when reversing.

The reversing camera is only an aid. It is not a substitute for your attention to the surroundings. The responsibility for safe manoeuvring and parking remains with you. Make sure that, when parking or manoeuvring, there are no persons, animals or other objects in the manoeuvring area.

You can select from the following views:

- Normal view
- Wide-angle view
- Trailer view

The area behind the vehicle is displayed as a mirror image, as in the inside rearview mirror.

System limitations

The reversing camera will not function or will only partially function in the following situations:

- If the boot lid or tailgate is open.
- If there is heavy rain, snow or fog.
- If the light conditions are poor, e.g. at night.

- If the camera lens is obstructed, dirty or misted up. Observe the notes on cleaning the reversing camera (→ page 313).
- If the rear of your vehicle is damaged. In this case, have the camera position and setting checked at a qualified specialist workshop.

The field of vision and other functions of the reversing camera may be restricted due to additional accessories on the rear of the vehicle (e.g. licence plate bracket or bicycle rack).

Vehicles without Parking Pilot

The following camera views are available in the multimedia system:

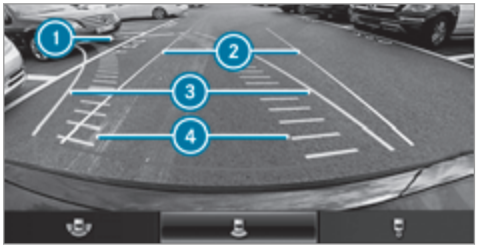

Normal view

1. Yellow guide line at a distance of approximately 4.0 m from the rear area
2. White guide line without turning the steering wheel, vehicle width including the outside mirrors (static)
3. Yellow guide line, vehicle width (surface area driven over) depending on the current steering wheel angle (dynamic)
4. Yellow lane marking the course the tyres will take at the current steering wheel angle (dynamic)



5. Yellow guide line at a distance of approximately 1.0 m from the rear area
6. Vehicle centre axis (locating aid)
7. Bumper
8. Red guide line at a distance of approximately 0.3 m from the rear area



Wide-angle view

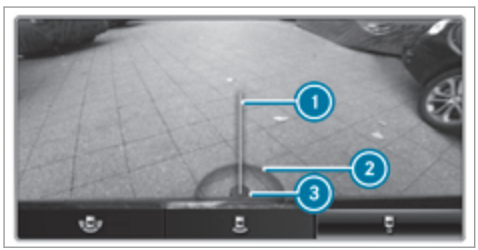

Trailer view

1 Yellow guide line, locating aid
2 Red guide line at a distance of approximately 0.3 m to the ball head of the trailer hitch
3 Ball head of the trailer hitch

Vehicles with Parking Pilot

The following camera views are available in the multimedia system:

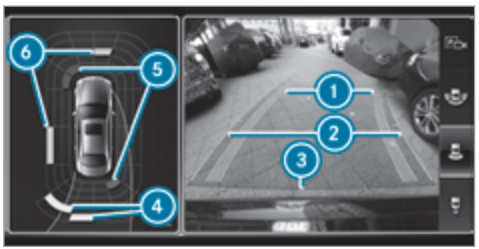

Normal view

1 Yellow lane marking the course the tyres will take at the current steering wheel angle (dynamic)
2 Yellow guide line, vehicle width (surface area driven over) depending on the current steering wheel angle (dynamic)
3 Red guide line at a distance of approximately 0.3 m from the rear area
4 Yellow warning display of Parking Assist PARKTRONIC: obstacles are at a distance of between approximately 0.6 m and 1.0 m
5 Red warning display of Parking Assist PARKTRONIC: obstacles are very close (approximately 0.3 m or less)
6 Orange warning display of Parking Assist PARKTRONIC: obstacles are a medium distance away (between approximately 0.3 m and 0.6 m)

ⓘ If the entire system fails, the inner segments of the warning display are shown in red. The indicator lamp on the PARKTRONIC button lights up and the P OFF symbol appears in the multifunction display.
If the system fails in the rear:

- the rear segments are shown in red when reversing.
- the rear segments are hidden when driving forwards.

When Parking Pilot is active, the lanes are displayed in green.
If Parking Assist PARKTRONIC is deactivated, the warning display fades out.



Wide-angle view

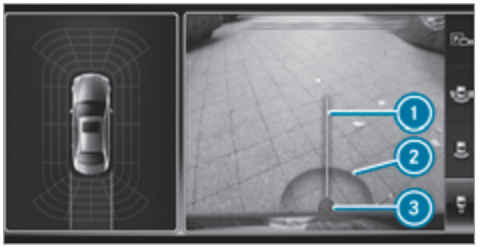

Trailer view

1. Yellow guide line, locating aid
2. Red guide line at a distance of approximately 0.3 m to the ball head of the trailer hitch
3. Ball head of the trailer hitch

Switching reversing camera automatic mode on/off

The reversing camera is only an aid. It is not a substitute for your attention to the immediate surroundings. The responsibility for safe manoeuvring and parking remains with you. Make sure that no persons, animals or objects are in the manoeuvring range. Pay attention to your surroundings and be ready to brake at all times.

Multimedia system:

→ Vehicle ▸▸ System settings ▸▸ Rear view camera ▸▸ Activation by R gear

▶ Activate ☑ or deactivate ☐ the function.
If you have activated the Activation by R gear function, the image from the reversing camera is displayed in the multimedia system when you select reverse gear.

Opening the camera cover of the reversing camera

Multimedia system:

→ Vehicle ▸▸ System settings ▸▸ Parking Pilot ▸▸ Open camera cover

▶ Activate or deactivate the function.

360° Camera

Function of the 360° Camera

The 360° Camera is a system that consists of four cameras. The cameras cover the immediate vehicle surroundings. The system assists you,

e.g. when parking or at exits with reduced visibility.

The 360° Camera is only an aid. It is not a substitute for your attention to the surroundings. The responsibility for safe manoeuvring and parking remains with you. Make sure that there are no persons, animals or objects in the manoeuvring area while manoeuvring and parking in parking spaces.

The system evaluates images from the following cameras:

- Reversing camera
- Front camera
- Two side cameras in the outside mirrors

Views of the 360° Camera
You can select from different views:



1. Wide-angle view, front
2. Top view with image from the front camera
3. Top view with images from the side cameras in the outside mirrors
4. Wide-angle view, rear
5. Top view with image from the reversing camera
6. Top view with trailer view

Top view



1. Lane indicating the route the vehicle will take with the steering wheel in its current position
2. Yellow warning display of Parking Assist PARKTRONIC: obstacles at a distance of approximately 1.0 m or less
3. Your vehicle from above

If the distance to the object lessens, the colour of the warning display changes 2. From a distance of approximately 0.6 m the warning display is shown in orange. From a distance of approximately 0.3 m the warning display is shown in red.

When Parking Assist PARKTRONIC is operational and no object is detected, the segments of the warning display are shown in grey.

ⓘ If the entire system fails, the inner segments of the warning display are shown in red. The indicator lamp on the PARKTRONIC button lights up and the P OFF symbol appears in the multifunction display.
If the system fails at the rear:

- the rear segments are shown in red when reversing.
- the rear segments are hidden when driving forwards.

If Parking Assist PARKTRONIC is deactivated, the warning display fades out.

Guide lines



① Yellow lane marking the course the tyres will take at the current steering wheel angle (dynamic)
② Yellow guide line, vehicle width (driven surface) depending on the current steering wheel angle (dynamic)
③ Red guide line at a distance of approximately 0.3 m from the rear area
④ Mark at a distance of approx. 1.0 m

ⓘ When Parking Pilot is active, the lanes are displayed in green.

The guide lines in the multimedia system display show the distances to your vehicle. The distances only apply to road level. In trailer mode, the guide lines are shown at the level of the trailer hitch.

System limitations

The 360° Camera will not function or will only partially function in the following situations:

- If the doors are open.
- The side mirrors are folded in.
- If the boot lid or tailgate is open.
- If there is heavy rain, snow or fog.
- If the light conditions are poor, e.g. at night.
- If the camera lens is obstructed, dirty or misted up.
- If the vehicle components in which the cameras are fitted are damaged. In this event, have the camera position and setting checked at a qualified specialist workshop.

Do not use the 360° Camera under such circumstances. You could otherwise injure others or collide with objects when parking the vehicle.

On vehicles with height-adjustable suspension or if the vehicle is carrying a heavy load, leaving the standard height can result in inaccuracies in the guide lines and in the display of the generated images, depending on technical conditions.

The field of vision and other functions of the camera system may be restricted due to additional accessories on the rear of the vehicle (e.g. licence plate bracket, bicycle rack).

See the notes on cleaning the 360° Camera (→ page 313).

Selecting a view for the 360° Camera
The Activation by R gear function is selected in the multimedia system.

- Engage reverse gear.
- In the multimedia system, select the desired view.

Switching automatic mode of the reversing camera on/off (Parking Pilot)
The reversing camera is only an aid. It is not a substitute for your attention to the surroundings. The responsibility for safe manoeuvring and parking remains with you. Make sure that no persons, animals or objects etc. are in the manoeuvring range. Pay attention to your surroundings and be ready to brake at all times.

Multimedia system:
Vehicle ▸▸ System settings ▸▸ Parking Pilot ▸▸ Activation by R gear

- Activate ☑ or deactivate ☐ the function. If you have activated the Activation by R gear function, the image from the reversing camera is displayed in the multimedia system when you select reverse gear.

Opening the camera cover of the reversing camera (Parking Pilot)
Multimedia system:
Vehicle ▸▸ System settings ▸▸ Parking Pilot ▸▸ Open camera cover

- Activate or deactivate the function.

Parking Pilot

Function of Parking Pilot
Parking Pilot is an electronic parking assistance system which uses ultrasound and is automatically activated during forward travel. The system is operational at speeds of up to approximately 35 km/h. When all the conditions are fulfilled, the P symbol appears in the multifunction display and the system automatically searches for and measures parking spaces on both sides of the vehicle parallel and perpendicular to the direction of travel. If Parking Pilot is activated, suitable parking spaces are displayed in the multimedia system. The P symbol appears in the multifunction display. The arrows show which side of the road free parking spaces are located.

The parking space and, if necessary, the parking direction can be selected as desired. Parking Pilot calculates a suitable vehicle path and assists you in the parking and exiting procedure.

Vehicles with automatic transmission: Parking Pilot changes gear, accelerates, brakes and steers the vehicle.

Vehicles with manual transmission: Parking Pilot supports you by intervening actively in the steering.

ⓘ The active brake application and automatic gear change is only available on vehicles with automatic transmission.

Parking Pilot is only an aid. It is not a substitute for your attention to the surroundings. The responsibility for safe manoeuvring and parking remains with you. Make sure that no persons, animals or objects etc. are in the manoeuvring range.

Parking Pilot is cancelled if, among other things, one of the following actions is carried out:

- You switch off Parking Assist PARKTRONIC.
- You switch off Parking Pilot.
- You begin steering.
- You apply the parking brake.
- **Vehicles with automatic transmission:** You engage P.
- ESP® intervenes.

Parking Pilot system limits

Objects located above or below the detection range of Parking Pilot are not detected when the parking space is being measured. These are also not taken into account when the parking manoeuvre is calculated, e.g. overhanging loads, overhangs or loading ramps of lorries or the boundaries of the parking space. In some circumstances, Parking Pilot may therefore guide you into the parking space prematurely.

⚠ **WARNING** Risk of accident due to objects located above or below the detection range of Parking Pilot

If there are objects above or below the detection range, the following situations may arise:

- Parking Pilot may steer too early.
- **Vehicles with automatic transmission:** The vehicle may not stop in front of these objects.

This could cause a collision.

▶ In these situations, do not use Parking Pilot.

Snowfall or heavy rain may lead to a parking space being measured inaccurately. Parking spaces that are partially occupied by trailer drawbars might not be identified as such or be measured incorrectly. Only use Parking Pilot on level, high-grip ground.

Do not use Parking Pilot, for example, in the following situations:

- In extreme weather conditions such as ice or packed snow or in heavy rain.
- If you are transporting a load that protrudes beyond the vehicle.
- If the parking space is on a steep downhill or uphill gradient.
- If you have installed snow chains.

Parking Pilot may also display parking spaces that are not suitable for parking, e.g.:

- Parking spaces where parking is prohibited.
- Parking spaces on unsuitable surfaces.

Parking Pilot will not assist you with parking spaces at right angles to the direction of travel in the following situations:

- If two parking spaces are located immediately next to each other.
- If the parking space is directly next to a low obstacle such as a low kerb.

Parking Pilot will not assist you with parking spaces parallel or at right angles to the direction of travel in the following situations:

- If the parking space is on a kerb.
- If the parking space is bordered by an obstacle, e.g. a tree, a post or a trailer.

Parking with Parking Pilot

ⓘ Depending on the vehicle's equipment, the button may also be located at a different position in the centre console.

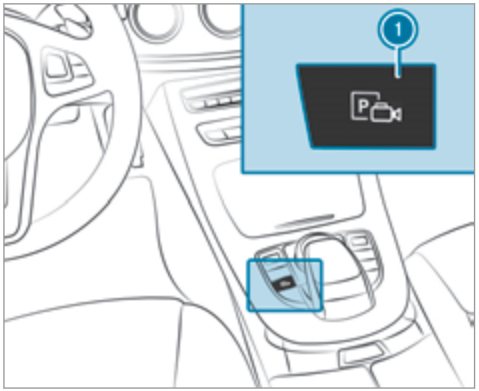

▶ Press button 1.
The Parking Pilot view appears on the display of the multimedia system. Area 2 displays detected parking spaces 4 and vehicle path 3.

ⓘ Vehicle path 3 shown on the multimedia system display may differ from the actual vehicle path.



▶ If you have driven past a suitable parking space: bring the vehicle to a standstill.

▶ Select desired parking space 4.

▶ Where necessary, select the parking direction: forwards or reverse.
Vehicle path 3 is shown, depending on the selected parking space and parking direction.

▶ Confirm the selected parking space.

⚠ **WARNING** Risk of accident due to vehicle swinging out while parking or pulling out of a parking space

While parking or pulling out of a parking space, the vehicle swings out and can drive onto areas of the oncoming lane.

This could cause you to collide with objects or other road users.

- Pay attention to objects and other road users.
- Where necessary, stop the vehicle or cancel the parking procedure with Parking Pilot.

- If, for example, the Engage reverse gear message appears in the display of the multimedia system: select the corresponding transmission position.
  Vehicles with automatic transmission: The vehicle drives into the selected parking space.
- **Vehicles with manual transmission:** Stop as soon as Parking Assist PARKTRONIC sounds the continuous warning tone, if not before. Depending on the message or as required, engage forward or reverse gear.

On completion of the parking procedure, the Parking Pilot finished, take control of the vehicle. display message appears. Further manoeuvring may still be necessary.

- After completion of the parking procedure, safeguard the vehicle against rolling away. When required by legal requirements or local conditions: turn the wheels towards the kerb.

ⓘ **Vehicles with automatic transmission:** You can stop the vehicle and change the transmission position during the parking procedure. The system then calculates a new vehicle path. The parking procedure can then be continued. If no new vehicle path is available, the transmission position will be changed again. If the vehicle has not yet reached the parking space, the parking procedure will be cancelled, should a gear be changed.

Exiting a parking space with Parking Pilot

Requirement:
You can only exit a parking space with Parking Pilot if you have previously parked the vehicle with Parking Pilot.

Please note that you are responsible for the vehicle and surroundings during the entire parking procedure.

- Start the vehicle.

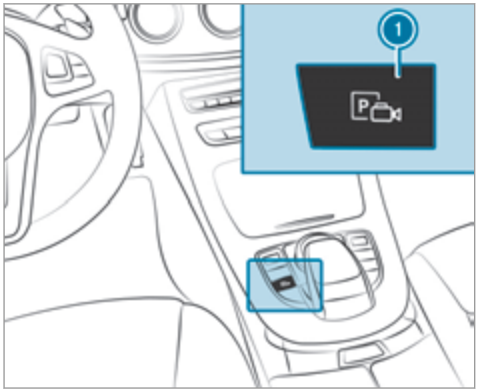

- Press button (1).
  The Parking Pilot view appears on the display of the multimedia system.
- If the vehicle has been parked at right angles to the direction of travel: in area (2), select direction of travel (3).



ⓘ The vehicle path shown on the multimedia system display may differ from the actual vehicle path.

- Confirm to start the exiting process.

⚠ **WARNING** Risk of accident due to vehicle swinging out while parking or pulling out of a parking space

While parking or pulling out of a parking space, the vehicle swings out and can drive onto areas of the oncoming lane.

This could cause you to collide with objects or other road users.

- Pay attention to objects and other road users.
- Where necessary, stop the vehicle or cancel the parking procedure with Parking Pilot.

- If, for example, the Engage forward gear message appears in the display of the multimedia system: select the corresponding transmission position.
  Vehicles with automatic transmission: The vehicle exits of the parking space.
- **Vehicles with manual transmission:** Stop as soon as Parking Assist PARKTRONIC sounds the continuous warning tone, if not before. Depending on the message or as required, engage forward or reverse gear.

As soon as the Parking Pilot finished, take control of vehicle. message appears in the display of the multimedia system, you must accelerate, brake, steer and change gears yourself again.

Function of Remote Parking Pilot

ⓘ Remote Parking Pilot is an additional function of Parking Pilot. Comply with local traffic laws and regulations when using Remote Parking Pilot on public roads.

Remote Parking Pilot supports the parking manoeuvre while you are outside your vehicle. Once you have selected a suitable parking space, you then exit the vehicle and guide it into the parking space using a suitable mobile phone. Remote Parking Pilot accelerates, brakes, steers the vehicle and changes gear. You can cancel the parking manoeuvre at any time using your mobile phone.

You can also use your mobile phone to move your vehicle backwards and forwards in the straight-ahead position (exploration mode). This is useful, for example, if a garage is so narrow that it is difficult or impossible to get in and out of the vehicle after it has been parked. Parking Pilot automatically performs any minor steering corrections that are required.

Remote Parking Pilot is only an aid. It is not a substitute for your attention to the surroundings. The responsibility for safe manoeuvring and parking remains with you. Make sure that no persons, animals or objects etc. are in the manoeuvring range.

For the Remote Parking Pilot function, you require a mobile phone and the current Remote Parking Pilot app.

The following operating systems are supported:

- Android™
- Apple® iOS

If the connection between the vehicle and the mobile phone is interrupted while a parking manoeuvre is being performed, the manoeuvre can be continued if the connection is re-established within about two minutes.

The following scenarios are supported:

- Parking in a parking space parallel to the direction of travel.
- Parking in a parking space at right angles to the direction of travel.
- Exiting a parking space at right angles to the direction of travel (exploration mode)
- Parking in a garage (exploration mode).
- Exiting a garage (exploration mode).

If technical problems arise during a parking manoeuvre (e.g. the permitted downhill gradient is exceeded), the following actions are performed automatically:

- The parking manoeuvre is cancelled.
- The vehicle is brought to a standstill.
- Transmission position P is engaged.
- The vehicle is switched off.

If the parking manoeuvre is cancelled, a corresponding message is displayed on the mobile phone. You can then take over and manoeuvre the vehicle into the parking space yourself. Alternatively, you can move the vehicle back to its original position, if necessary.

Whilst the vehicle is being parked with Parking Pilot, you can interrupt the process to take control of the vehicle with Remote Parking Pilot and manoeuvre it into its final position.

You can find further information in the operating instructions for the Remote Parking Pilot app http://www.mercedes.me.

System limitations

Snowfall or heavy rain may lead to a parking space being measured inaccurately or, in certain cases, to connection problems with the mobile phone. Parking spaces that are partially occupied by trailer drawbars might not be identified as such or be measured incorrectly. Only use Parking Pilot on level, high-grip ground. The parking space must be at least 0.60 m wider than the vehicle without the outside mirrors.

Do not use Remote Parking Pilot, for example, in the following situations:

- In extreme weather conditions such as ice or packed snow or in heavy rain.
- If you are transporting a load that protrudes beyond the vehicle.
- If you have installed snow chains.
- If the parking space is on a downhill or uphill incline.

Remote Parking Pilot is cancelled if, among other things, one of the following actions is carried out:

- You switch off Parking Pilot.
- You press a button on the key.
- ESP® intervenes.

During the parking manoeuvre, you must not stand more than approx. 3.0 m away from the vehicle. Otherwise, the procedure will be interrupted and a corresponding message will be displayed on the mobile phone. If you move closer to the vehicle, you will be able to continue the procedure.

Further information on cancelling the function can be found in the operating instructions for the Remote Parking Pilot app.

Operating Remote Parking Pilot

⚠ **WARNING** Risk of accident due to objects located above or below the detection range of Parking Pilot

If there are objects above or below the detection range, the following situations may arise:

- Parking Pilot may steer too early.
- The vehicle may not stop in front of these objects.

This could cause a collision.

▶ In these situations, do not use Parking Pilot.

Objects located above or below the detection range of Parking Pilot are not detected when the parking space is being measured. These are also not taken into account when the parking manoeuvre is calculated, e.g. overhanging loads, overhangs or loading ramps of lorries or the boundaries of the parking space. In some circumstances, Parking Pilot may therefore guide you into the parking space prematurely.

WARNING Danger due to insufficient view of the vehicle surroundings

If the vehicle is being parked with Remote Parking Pilot, the view of the vehicle's surroundings may be limited.

- When you park the vehicle with Remote Parking Pilot, observe the following points, for example:
  - Make sure that you have the best view possible of the vehicle and the vehicle's surroundings.
  - Make sure that no persons, animals or objects are in the path of your vehicle.
  - Make sure that you maintain a suitable distance to the vehicle and that neither you nor other road users could be endangered.
  - Be aware of the vehicle's surroundings at all times and identify possible dangers.
  - If necessary, cancel the parking process.

Keep in mind that the system limits must be observed at all times. If necessary, cancel the parking manoeuvre.

Please note that you can only use Remote Parking Pilot if you have a valid driving licence.

No persons or pets are permitted to remain in the vehicle during the parking manoeuvre.

Always make sure that other road users can access their vehicles.

ⓘ Keep the key with you during the parking manoeuvre. You can cancel the parking manoeuvre and bring the vehicle to a standstill by pressing a button on the key.

Requirement:

- The mobile phone and Parking Pilot are connected (→ page 228)

Parking

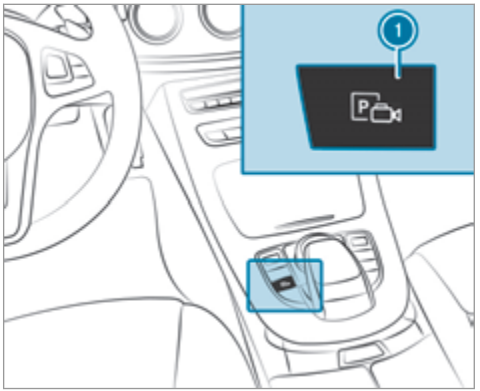

- Press button 1.
  The Parking Pilot view appears on the display of the multimedia system. Area 2 displays detected parking spaces 4 and vehicle path 3.

ⓘ Vehicle path ③ shown on the multimedia system display may differ from the actual vehicle path.



- If you have driven past a suitable parking space: bring the vehicle to a standstill. Area ② is activated.
- Select transmission position P.
- Select the desired parking space in area ② and confirm.
- Exit the vehicle.
- Ensure that all vehicle doors, windows and the boot lid or the tailgate are closed.
- Start the Remote Parking Pilot app.
- Park the vehicle in the parking space using your mobile phone.
- After completion of the parking procedure, safeguard the vehicle against rolling away. When required by legal requirements or local conditions: turn the wheels towards the kerb.

ⓘ On completion of the parking manoeuvre, the vehicle is automatically locked.

ⓘ You can find further information in the operating instructions for the Remote Parking Pilot app http://www.mercedes.me.

Taking over a parking manoeuvre of Parking Pilot

- Park the vehicle with Parking Pilot (→ page 221).
- When the vehicle is in the desired position, select transmission position P. Parking Pilot is ended and Remote Parking Pilot is activated.
- Exit the vehicle.
- Ensure that all vehicle doors, windows and the boot lid or the tailgate are closed.
- Start the Remote Parking Pilot app.
- Park the vehicle in the parking space using your mobile phone.
- After completion of the parking procedure, safeguard the vehicle against rolling away. When required by legal requirements or local conditions: turn the wheels towards the kerb.

ⓘ On completion of the parking manoeuvre, the vehicle is automatically locked.

ⓘ You can find further information in the operating instructions for the Remote Parking Pilot app http://www.mercedes.me.

Parking with exploration mode



- Bring the vehicle to a standstill. Area (2) is activated.
- To activate Remote Parking Pilot, select transmission position P.
- Select your own vehicle (3) and confirm.
- Exit the vehicle.
- Ensure that all vehicle doors, windows and the boot lid or the tailgate are closed.
- Start the Remote Parking Pilot app.
- Using the mobile phone, drive the vehicle forwards or backwards to the desired position.

The parking manoeuvre requires a minimum parking space size. If clearances get smaller during the parking manoeuvre, e.g. if the vehicle is being driven into a garage, a message will appear on the mobile phone. You will need to confirm the reduced clearances.

ⓘ On completion of the parking manoeuvre, the vehicle is automatically locked.

ⓘ You can find further information in the operating instructions for the Remote Parking Pilot app http://www.mercedes.me.

Exiting a parking space with exploration mode

- Unlock the vehicle.
- Start the Remote Parking Pilot app within one minute.
- Using the mobile phone, drive the vehicle forwards or backwards to the desired position.

ⓘ The outside mirrors are not automatically folded out after exiting a parking space.

Authorising and de-authorising a mobile phone for Remote Parking Pilot

Multimedia system:

→ Vehicle ▸▸ System settings ▸▸ Parking Pilot ▸▸ Remote Parking Pilot

Authorising a new mobile phone

In order to be able to use the Remote Parking Pilot function, you must authorise your mobile phone. You can authorise up to six mobile phones.

- Select Connect new device. Remote Parking Pilot is ready to connect.
- Start the Remote Parking Pilot app and search for the vehicle name. A connection prompt is displayed.
- Enter the PIN.

De-authorising a mobile phone

- Select the mobile phone.
- Select Options .
- Select De-authorise.
- Select Yes. The mobile phone is deleted from the list of devices.

Drive Away Assist

ⓘ Drive Away Assist is only available for vehicles with automatic transmission.

Drive Away Assist can reduce the severity of an impact when pulling away. If an obstacle is detected in the direction of travel, the vehicle's speed is briefly reduced to approx. 2 km/h. If a critical situation is detected, a symbol appears on the camera image of the multimedia system.

WARNING Risk of accident caused by limited detection performance of Drive Away Assist

Drive Away Assist cannot always clearly identify objects and traffic situations.

In such cases, Drive Away Assist might:

- Warn you without reason and limit the vehicle speed.
- Not warn you or not limit the vehicle speed.

▶ Always pay careful attention to the traffic situation; do not rely on Drive Away Assist alone.

▶ Be prepared to brake or swerve if necessary.

Drive Away Assist is only an aid. It is not a substitute for your attention to the surroundings. The responsibility for safe manoeuvring and parking remains with you. Make sure that no persons, animals or objects etc. are in the manoeuvring range.

A risk of a collision may arise in the following situations, for example:

- If the driver mixes up the accelerator and brake pedals.
- If the wrong gear is selected.

The Drive Away Assist function is active under the following conditions:

- If Parking Assist PARKTRONIC is activated.
- Every time the gear is changed to R or D when the vehicle is at a standstill.
- If the detected obstacle is less than approx. 1.0 m away.
- If the manoeuvring assistance function is activated in the multimedia system.

Drive Away Assist is unavailable on inclines and when driving with a trailer.

Cross Traffic Alert

ⓘ Also read the instructions on Blind Spot Assist (→ page 231).

Vehicles with Blind Spot Assist: Drivers can also be warned of any crossing traffic when reversing out of a parking space. If a critical situation is detected, a warning symbol appears on the camera image of the multimedia system. If the driver does not respond to the warning, the vehicle's brakes can be applied automatically. To do this, the function uses the radar sensors in the bumper. The area adjacent to the vehicle is continually monitored.

If the radar sensors are obstructed by vehicles or other objects, detection is not possible.

The Cross Traffic Alert function is active under the following conditions:

- If Blind Spot Assist is activated.
- If the vehicle is reversing at walking pace.
- If the manoeuvring assistance function is activated in the multimedia system.

Cross Traffic Alert is unavailable on inclines and when driving with a trailer.

Activating/deactivating manoeuvring assistance

Multimedia system:

Vehicle ▸▸ System settings ▸▸ Parking Pilot ▸▸ Manoeuvring assistance

▶ Activate ☑ or deactivate ☐ the function.

ATTENTION ASSIST

Function of ATTENTION ASSIST

ATTENTION ASSIST assists you on long, monotonous journeys, e.g. on motorways and trunk roads. If ATTENTION ASSIST detects indicators of fatigue or increasing lapses in concentration on the part of the driver, it suggests taking a break.

ATTENTION ASSIST is only an aid. It cannot always detect fatigue or lapses in concentration until too late. The system is not a substitute for a well-rested and attentive driver. On long journeys, take regular breaks in good time that allow for adequate recuperation.

You can choose between two settings.

- **Standard:** normal system sensitivity
- **Sensitive:** higher system sensitivity. The driver is warned earlier and the attention level detected by ATTENTION ASSIST is adapted accordingly.

If drowsiness or increasing lapses in concentration are detected, the ATTENTION ASSIST: Take a break! warning appears in the Instrument Display. You can acknowledge the message and take a break where necessary. If you do not take a break and ATTENTION ASSIST continues to detect increasing lapses in concentration, you will be warned again after a minimum of 15 minutes.



You can have the following status information for ATTENTION ASSIST displayed in the assistance menu of the on-board computer:

- The length of the journey since the last break.
- The attention level determined by ATTENTION ASSIST.

if ATTENTION ASSIST is unable to calculate the attention level and cannot issue a warning, the System suspended message appears.

If ATTENTION ASSIST is deactivated, the OFF symbol appears in the assistance graphic in the Instrument Display when the engine is running. ATTENTION ASSIST is activated automatically when the engine is re-started. The last selected sensitivity level remains stored.

System limitations

ATTENTION ASSIST is active in the 60 km/h to 200 km/h speed range.

The functionality of ATTENTION ASSIST is restricted, and warnings may be delayed or not occur at all in the following situations:

- If you have been driving for less than 30 minutes.
- If the road condition is poor (uneven road surface or potholes).
- If there is a strong side wind.
- If you adopt a sporty driving style (high cornering speeds or high rates of acceleration).
- If the Steering Pilot function of Distance Pilot DISTRONIC is active.
- If the time has been set incorrectly.
- In active driving situations, if you change lanes and vary your speed frequently.

The ATTENTION ASSIST tiredness or alertness assessment is deleted and restarted when continuing the journey in the following situations:

- If you switch off the engine.
- If you unfasten your seat belt and open the driver's door (e.g. change drivers or take a break).

Activating/deactivating ATTENTION ASSIST

Multimedia system:

Vehicle ›› Assistance ›› Attention Assist

Selection options

▶ Select Standard, Sensitive or Off.

Blind Spot Assist and Active Blind Spot Assist

Function of Blind Spot Assist and Active Blind Spot Assist

Blind Spot Assist uses two lateral, rear-facing radar sensors to monitor the area up to 40 m behind your vehicle and 3 m directly next to your vehicle.

If a vehicle is detected at speeds above approximately 12 km/h and this vehicle subsequently enters the monitoring range directly next to your vehicle, the warning lamp in the outside mirror lights up red.

If a vehicle is detected close to your vehicle in the lateral monitoring range and you switch on the turn signal indicator in the corresponding direction, a warning tone sounds once. The red warning lamp in the outside mirror flashes. If the turn signal indicator remains on, all other detected vehicles are indicated only by the flashing of the red warning lamp.

If you overtake a vehicle quickly, no warning is given.

⚠ **WARNING** Risk of accident despite Blind Spot Assist

Blind Spot Assist does not react to vehicles approaching and overtaking you at a greatly different speed.

As a result, Blind Spot Assist cannot warn drivers in this situation.

▶ Always pay careful attention to the traffic situation and maintain a safe distance at the side of the vehicle.

Blind Spot Assist and Active Blind Spot Assist are only aids. They may fail to detect some vehicles and are no substitute for attentive driving. Always ensure that there is sufficient distance to the side for other road users and obstacles.

System limitations

The detection capability of Blind Spot Assist can be restricted in the following situations:

- If the sensors are dirty or covered.
- When there is poor visibility, e.g. due to fog, heavy rain, snow or spray.
- If narrow vehicles are within the monitoring range, e.g. bicycles.

Warnings may be issued in error when driving close to crash barriers or similar solid lane borders. Warnings may be interrupted when driving alongside long vehicles, for example lorries, for a prolonged time.

Blind Spot Assist is not operational when reverse gear is engaged.

Brake application of Active Blind Spot Assist

If Active Blind Spot Assist detects a risk of a side impact in the monitoring range, a course-correcting brake application is carried out. This is designed to help you avoid a collision.

The course-correcting brake application is available in the speed range between approximately 30 km/h and 200 km/h.

⚠ **WARNING** Risk of accident despite brake application of Active Blind Spot Assist

A course-correcting brake application cannot always prevent a collision.

- ▶ Always steer, brake or accelerate yourself, especially if Active Blind Spot Assist warns you or makes a course-correcting brake application.
- ▶ Always maintain a safe distance at the sides.

⚠ **WARNING** Risk of accident despite Active Blind Spot Assist

Blind Spot Assist does not react to the following:

- Overtaking vehicles closely on the side, placing them in the blind spot area
- Vehicles approaching and overtaking you at a very different speed

As a result, Active Blind Spot Assist may neither give warnings nor intervene in such situations.

- ▶ Always pay careful attention to the traffic situation and maintain a safe distance at the side of the vehicle.



If a course-correcting brake application occurs, the red warning lamp flashes in the outside mirror and a warning tone sounds. In addition, a display (1) indicating the danger of a side collision appears in the multifunction display.

In rare cases, the system may make an inappropriate brake application. This brake application

may be interrupted at any time if you steer slightly in the opposite direction or accelerate.

System limitations

Either a course-correcting brake application appropriate to the driving situation, or none at all, may occur in the following situations:

- There are vehicles or obstacles, e.g. crash barriers, on both sides of your vehicle.
- A vehicle approaches too closely on the side.
- You have adopted a sporty driving style with high cornering speeds.
- You clearly brake or accelerate.
- A driving safety system intervenes, such as ESP® or Active Brake Assist.
- ESP® is deactivated.
- A loss of tyre pressure or a defective tyre is detected.
- When driving with a trailer, the electrical connection to the trailer hitch has been correctly established.

Activating/deactivating Blind Spot Assist or Active Blind Spot Assist

Multimedia system:

→ Vehicle ▸▸ Assistance ▸▸ Blind Spot Assist

▶ Activate or deactivate the function.

Active Lane Keeping Assist

Function of Active Lane Keeping Assist

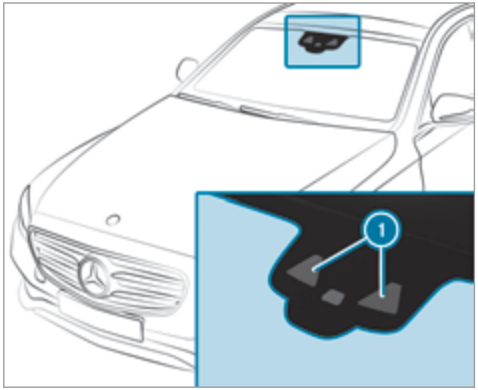

Active Lane Keeping Assist monitors the area in front of your vehicle by means of multifunction camera (1). It serves to protect you against unintentionally leaving your lane. You will be warned by means of a vibration in the steering wheel

and a course-correcting brake application guides you back into your lane.

You are warned by vibration pulses in the steering wheel in the following circumstances:

- Active Lane Keeping Assist detects lane markings.
- A front wheel passes over the lane markings.

You will also be guided back into your lane by means of a course-correcting brake application if the following conditions are met:

- Active Lane Keeping Assist detects lane markings on both sides.
- A front wheel drives over a solid lane marking.

Whether a warning is issued and when this occurs also depends on the selected sensitivity setting (standard or adaptive).

If you fail to adapt your driving style, Active Lane Keeping Assist can neither reduce the risk of an accident nor override the laws of physics. It cannot take into account road, weather or traffic conditions. Active Lane Keeping Assist is only an aid. You are responsible for the distance to the vehicle in front, for vehicle speed, for braking in good time and for staying in lane.

Vehicles with Lane Tracking package: If the lane markings are solid lines and you do not react to the warning, a lane-correcting brake application can bring the vehicle back into the original lane.

Vehicles with Driving Assistance package or Driving Assistance Plus package: If you do not react to the warning, a lane-correcting brake application can bring the vehicle back into the original lane. In the case of a broken lane marking being detected, a brake application will only be made if a vehicle has been detected in the adjacent lane. Oncoming vehicles, overtaking vehicles and vehicles in adjacent lanes can be detected.

The brake application is available in the speed range between 60 km/h and 200 km/h.



If a lane-correcting brake application occurs, display (1) appears in the multifunction display.

System limits

No lane-correcting brake application occurs in the following situations:

- You clearly and actively steer, brake or accelerate.
- You have switched on the turn signal indicator.
- A driving safety system intervenes, such as ESP®, Active Brake Assist or Active Blind Spot Assist.

- You have adopted a sporty driving style with high cornering speeds or high rates of acceleration.
- ESP® is deactivated.
- When driving with a trailer, the electrical connection to the trailer has been correctly established.
- If a loss of tyre pressure or a defective tyre has been detected and displayed.

The system may be impaired or may not function in the following situations:

- There is poor visibility, e.g. due to insufficient illumination of the road, highly variable shade conditions, or due to rain, snow, fog or heavy spray.
- There is glare, e.g. from the sun, reflections or oncoming traffic.
- There is dirt on the windscreen in the vicinity of the multifunction camera or the camera is misted up, damaged or obscured.
- No or several, unclear lane markings are present for one lane, e.g. in a construction area.
- The lane markings are worn, dark or covered.
- The distance to the vehicle in front is too small and the lane markings thus cannot be detected.
- The lane markings change quickly, e.g. lanes branch off, cross one another or merge.
- The road is very narrow and winding.

Vehicles with Driving Assistance package or Driving Assistance Plus package: Active Lane Keeping Assist uses radar sensors to monitor several areas around the vehicle. If the radar sensors in the rear bumper are dirty or covered with snow, the system may be impaired or may not function. If an obstacle in the lane in which you are driving has been detected, no lane-correcting brake application occurs.

Activating Active Lane Keeping Assist

⚠ **WARNING** Risk of accident despite Active Lane Keeping Assist warning

A lane-correcting brake application cannot always bring the vehicle back into the original lane.

▶ Always steer, brake or accelerate yourself, especially if Active Lane Keeping Assist warns you or makes a lane-correcting brake application.

⚠ **WARNING** Risk of accident despite intervention of Active Lane Keeping Assist

Active Lane Keeping Assist does not detect traffic conditions or road users. In very rare cases, the system may make an inappropriate brake application, e.g. after intentionally driving over a solid lane marking.

The brake application can be interrupted at any time if you steer slightly in the opposite direction.

▶ Always make sure that there is sufficient distance to the side for other traffic or obstacles.

⚠ **WARNING** Risk of accident despite Lane Keeping Assist

Lane Keeping Assist cannot always clearly detect lane markings.

In such cases, Lane Keeping Assist can:

- give an unnecessary warning
- not give a warning

▶ Always pay particular attention to the traffic situation and keep within the lane, especially if Active Lane Keeping Assist alerts you.

Requirement:
The driving speed is at least 60 km/h.

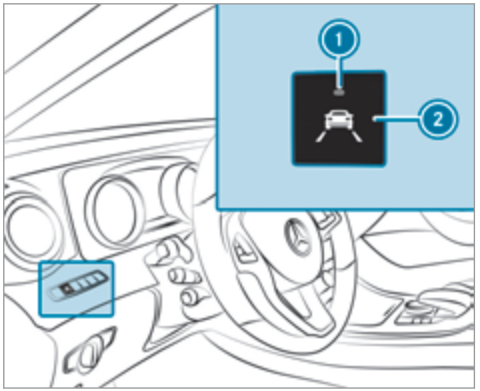

▶ Press button 2.
If indicator lamp 1 lights up, Lane Keeping Assist is activated. When lane markings are detected, the lines in the assistance graphic are shown in white.

Sensitivity of Active Lane Keeping Assist
With the standard or adaptive setting, you can influence when the warning vibration of Lane Keeping Assist takes place.

In both the standard and adaptive settings, no warning vibration occurs in the following situations:

- You have switched on the turn signal indicator.
- A driving safety system intervenes, such as ABS, BAS or ESP®.

In the adaptive setting, there will also be no warning vibration in the following situations:

- The vehicle is accelerated or braked considerably.
- You steer actively, e.g. swerve to avoid an obstacle or change lane quickly.
- You cut the corner on a sharp bend.

Setting the sensitivity of Active Lane Keeping Assist
Multimedia system:
→ Vehicle ▸▸ Assistance ▸▸ Active Lane Keeping Assist

Options

▶ Select Adaptive or Standard.

Trailer hitch

Notes on trailer operation

Observe the following notes on the tongue weight:

- use a tongue weight as close as possible to the maximum tongue weight
- do not use a tongue weight that exceeds or falls below the permissible tongue weight

Do not exceed the following values:

- permissible towing capacity
- the permissible rear axle load of the towing vehicle
- the permissible gross mass of the towing vehicle
- the permissible gross mass of the trailer
- the maximum permissible speed of the trailer

Make sure of the following before starting a journey:

- the tyre pressure on the rear axle of the towing vehicle is set for a maximum load
- the headlamps are adjusted correctly

Extending/retracting the ball neck fully electrically

⚠ **WARNING** Risk of accident due to the ball neck not being engaged

If the ball neck is not engaged, the trailer may come loose.

▶ Make sure that the ball neck securely engages and locks into place.

! **NOTE** Damage to the fully-electric trailer hitch

The fully-electric trailer hitch could be mechanically damaged by applying additional pressure when the ball neck is being extended or retracted.

▶ Do not make the ball neck extend/retract faster by applying additional pressure.

Requirements:

Make sure of the following before retracting the ball neck fully electrically:

- trailer cables or adapter plugs have been removed
- the range of movement is clear

Extending/retracting the ball neck fully electrically

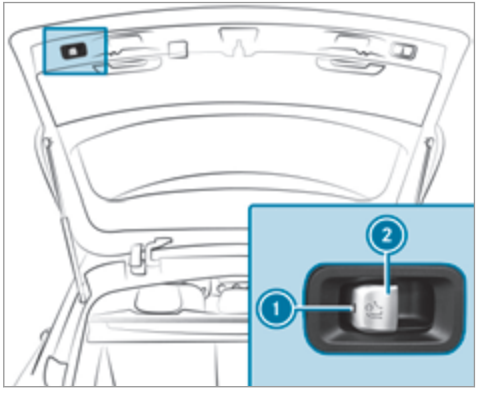

▶ Pull switch (2).
Indicator lamp (1) flashes and the Trailer coupling extending...display message appears in the multifunction display.

The ball neck extends fully electrically.

Wait until the ball neck has locked in place.

The ball neck is securely locked into place once indicator lamp (1) goes out.

If the ball neck is not securely locked in place, the Check trailer hitch lockdisplay message appears in the multifunction display.

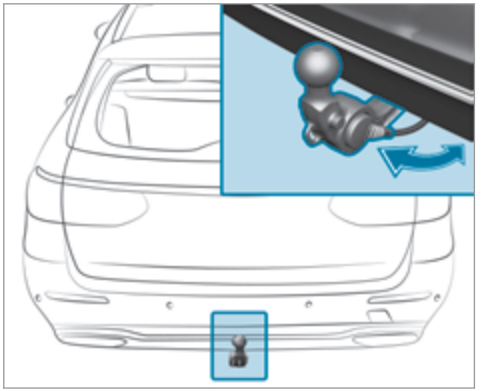

▶ Pull switch (2) again.
Indicator lamp (1) flashes and the Trailer coupling extending...display message appears in the multifunction display.

The ball neck retracts fully electrically.

Wait until the ball neck has locked in place.

The ball neck is securely locked into place once indicator lamp (1) goes out.

If the ball neck is not securely locked in place, the Check trailer hitch lockdisplay message appears in the multifunction display.

Observe any information which may be displayed in the instrument cluster:

- warning and indicator lamps (→ page 431)
- display messages (→ page 375)

Coupling up/uncoupling a trailer

WARNING Risk of injury from the vehicle level being changed

Vehicles with level control system: the vehicle level may be changed unintentionally, e.g. by other persons. If this happens when you are coupling up or uncoupling a trailer, you could become trapped. In addition, other people could become trapped if their limbs are between the vehicle body and the tyres or underneath the vehicle.

When coupling up or uncoupling a trailer, make sure that:

- The doors or tailgate are not opened or closed.
- Do not initiate the level control system and do not operate the DYNAMIC SELECT switch.
- The vehicle is not locked or unlocked.

Requirements:

- Before coupling up the trailer, the ball neck must extend fully electrically, securely engage and lock into place.
- **All-Terrain vehicles:** couple the trailer in the **Comfort** drive program. (→ page 163)
- **All-Terrain vehicles:** ensure the vehicle is on a normal level.

Trailers with a 7-pin plug can be connected to the vehicle:

- adapter plug
- adapter cable

In order for the trailer to be recognised by the vehicle:

- the electrical connection must be set up correctly
- the trailer lighting system must be in working order

The operation of the following systems depends on the trailer being connected correctly:

- ESP®
- Parking Assist PARKTRONIC
- Parking Pilot
- Blind Spot Assist or Active Blind Spot Assist
- Active Lane Keeping Assist

Coupling up a trailer

! **NOTE** Damage to the battery due to full discharge

Charging the trailer battery using the power supply of the trailer can damage the battery.

- Do not use the power supply to charge the trailer battery.

- Remove the protective covering from the ball head and store it in a safe place.
- Position the trailer on a level surface behind the vehicle and couple it up to the vehicle.



- Open the socket cover.
- Insert the plug connector with lug 1 into groove 3 on the socket.
- Turn bayonet coupling 2 clockwise to the stop.
- Let the cover engage.
- Secure the cable to the trailer with cable ties (if you are using an adapter cable).

- Make sure that cable is always slack for ease of movement when cornering.
- Check the trailer lighting system. Push the combination switch upwards/downwards and check whether the corresponding turn signal light on the trailer is flashing.

A display message may appear in the multifunction display even if the trailer has been connected correctly:

- LEDs have been installed on the trailer lighting system
- the current has fallen below the trailer lighting system's minimum current (50 mA)

ⓘ Accessories can be connected to the permanent power supply and the power supply that is switched on via the ignition lock with maximum power consumptions of 180 W.

Uncoupling a trailer

⚠ **WARNING** Risk of being crushed and becoming trapped when uncoupling a trailer

When uncoupling a trailer with an engaged inertia-activated brake, your hand may become trapped between the vehicle and the trailer drawbar.

- Do not uncouple trailers with an engaged overrun brake.

⚠ **WARNING** Risk of becoming trapped when disconnecting the trailer cable

Vehicles with level control system: the vehicle lowers when the trailer cable is disconnected.

This could result in you or other people becoming trapped if your or their limbs are between the vehicle body and the tyres or underneath the vehicle.

- Make sure nobody is underneath the vehicle or in the immediate vicinity of the wheel arches when you disconnect the trailer cable.

! **NOTE** Damage to the rear bumper from installing adapter cables or adapter plugs

The following parts could be damaged when retracting the ball neck fully electrically:

- bumper
- adapter cable
- adapter plug

- Always remove the adapter cable or adapter plug before retracting the ball neck fully electrically.

- Safeguard the trailer against rolling away.
- Disconnect the electrical connection between the vehicle and the trailer.
- Uncouple the trailer.
- Place the protective cover on the ball head.

Bicycle rack

WARNING Risk of an accident when using the bicycle rack incorrectly

The bicycle rack may become detached from the vehicle in the following cases:

- the permissible load capacity of the trailer hitch is exceeded.
- the bicycle rack is used incorrectly.
- the bicycle rack is secured to the ball neck beneath the ball head.

Observe the following for your own safety and that of other road users:

- always adhere to the permissible load capacity of the trailer hitch.
- only use the bicycle rack to transport bicycles.
- always mount the bicycle rack properly by attaching to the ball head and the ball neck guide pin, if possible.
- when transporting four bicycles, always use bicycle racks which have additional support on the ball neck guide pin.
- only use bicycle racks approved by Mercedes-Benz.
- always observe the bicycle rack operating instructions.

NOTE Damage to or cracks on the trailer hitch due to unsuitable bicycle racks or bicycle racks being used incorrectly

▶ Only use bicycle racks approved by Mercedes-Benz.

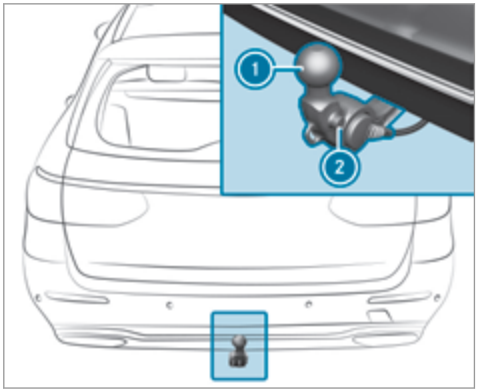

Trailer hitch (example with additional guide pins)

Depending on the design, up to four bicycles can be transported on the bicycle rack:

- when mounted by attaching to ball head (1), the maximum load capacity is 75 kg. Up to three bicycles can be transported.

- when mounted on ball head (1) and guide pin (2), the maximum load capacity is 100 kg. Up to four bicycles can be transported.

The load capacity is calculated from the weight of the bicycle rack and the bicycle rack load.

For bicycles weighing a total of between 75 kg and 100 kg only use bicycle racks with additional support on guide pin (2).

The vehicle's handling characteristics change when a bicycle rack is fitted. The vehicle:

- is heavier
- is restricted in its acceleration and gradeability
- has an increased braking distance

This can impair the vehicle's handling characteristics. Adapt your driving style accordingly. Drive carefully and maintain a safe distance.

When using a bicycle rack, set the tyre pressure for maximum load on the rear axle of the vehicle. Further information on the tyre pressure can be found in the tyre pressure table (→ page 341).

Notes on loads

The larger the distance between the load's centre of gravity and the ball head, the greater the load on the trailer hitch.

Observe the following notes:

- mount heavy bicycles as close to the vehicle as possible.
- always distribute the load on the bicycle rack as evenly as possible across the vehicle's longitudinal axis.

Mercedes-Benz recommends removing all detachable parts from the bicycles, e.g. baskets, child seats or batteries, before loading them onto the bicycle rack. This improves the wind resistance and centre of gravity of the bicycle rack.

Always secure the bicycles to prevent them from moving around and check they are secured at regular intervals.

Do not use tarpaulins or other covers. The handling characteristics and rear view may be impaired. In addition, the wind resistance and load on the trailer hitch increase.

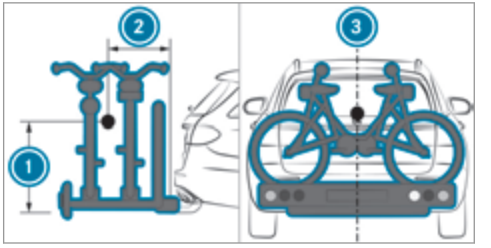

Distribution of the load on the bicycle rack

(1) Vertical distance between the centre of gravity and ball head

(2) Horizontal distance between centre of gravity and ball head

(3) Centre of gravity located on the vehicle's centre axis

Observe the following information when loading the bicycle rack:

Number of bicycles	Total weight of bicycle rack and load	Max. distance 1	Max. distance 2
3	Up to 75 kg	420 mm	300 mm
4[1]	Up to 90 kg[1]	420 mm	400 mm
4[1]	Up to 100 kg[1]	420 mm	400 mm

[1] When transporting four bicycles or with a total weight between 75 kg and 100 kg, always use bicycle racks with additional support on the trailer hitch guide pin.

Instrument display overview

WARNING Risk of accident due to an instrument display malfunction

If the instrument display has failed or malfunctioned, you may not recognise function restrictions applying to safety relevant systems.

The operating safety of your vehicle may be impaired.

- ▶ Drive on carefully.
- ▶ Have the vehicle checked immediately at a qualified specialist workshop.

If the operating safety of your vehicle is impaired, park the vehicle safely as soon as possible. Contact a qualified specialist workshop.

Instrument display (standard)

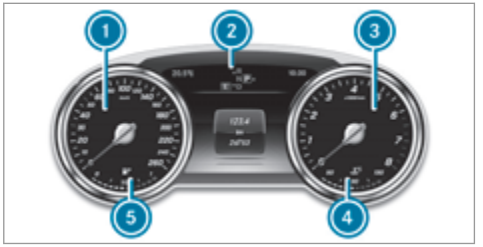

1. Speedometer
2. Multifunction display
3. Rev counter
4. Coolant temperature display
5. Fuel level and fuel filler flap location indicator

The segments in speedometer 1 indicate the system status for the following:

- Cruise control (→ page 193)
- Limiter (→ page 193)
- Distance Pilot DISTRONIC (→ page 196)

NOTE Engine damage due to excessively high engine speeds

The engine will be damaged if you drive with the engine in the overrevving range.

- ▶ Do not drive with the engine in the overrevving range.

The fuel supply is interrupted to protect the engine when the red band in rev counter 3 (overrevving range) is reached.

During normal operating conditions, coolant temperature display 4 may rise to 120 °C.

WARNING Danger of burns when opening the bonnet

If you open the engine bonnet when the engine has overheated or during a fire in the engine compartment, you could come into contact with hot gases or other escaping operating fluids.

- ▶ Before opening the bonnet, allow the engine to cool down.

▶ In the event of a fire in the engine compartment, keep the engine bonnet closed and call the fire service.

Overview of the buttons on the steering wheel

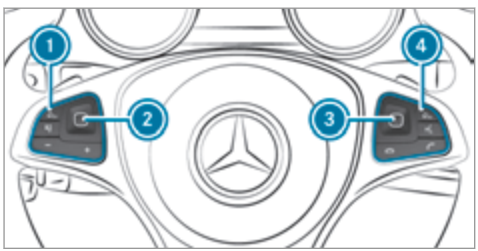

1 Button group:
- Main menu and back button (on-board computer)
- Switches sound off/on
- Increases the volume
- Decreases the volume

2 Touch Control (on-board computer)

3 Touch Control (multimedia system)

4 Button group:
- Main menu and back button (multimedia system)
- LINGUATRONIC or Voice Control System
- Makes/accepts a call
- Rejects/ends a call

Operating the on-board computer

⚠ **WARNING** Risk of distraction from information systems and communications equipment

If you operate information and communications equipment integrated in the vehicle when driving, you will be distracted from the traffic situation. This could also cause you to lose control of the vehicle.

▶ Only operate this equipment when the traffic situation permits.

▶ If you cannot be sure of this, stop the vehicle whilst paying attention to road and traffic conditions and operate the equipment with the vehicle stationary.

You must observe the legal requirements for the country in which you are currently driving when operating the on-board computer.

ⓘ The on-board computer displays appear in the multifunction display (→ page 246).

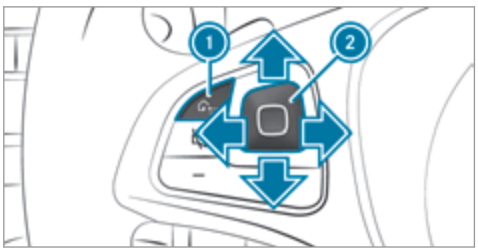

The on-board computer is operated using Touch Control 2 and back button 1 on the left-hand side of the steering wheel.

The following menus are available:

- Service
- Assistance
- Trip
- Navigation
- Radio
- Media
- Telephone
- HUD

The menus can be called up from the menu bar in the multifunction display.



- **To call up the menu bar:** press the back button on the left.
- **To scroll in the menu bar:** swipe to the left or right on the left-hand Touch Control.
- **To call up the menu or confirm the selection:** press the left-hand Touch Control.
- **To scroll through displays or lists in the menu:** swipe upwards or downwards on the left-hand Touch Control.
- **To call up the submenu or confirm the selection:** press the left-hand Touch Control.
- **To exit the submenu:** press the back button on the left.

If you are browsing a submenu and you press and hold the back button on the left, the menu bar appears.

Displays in the multifunction display

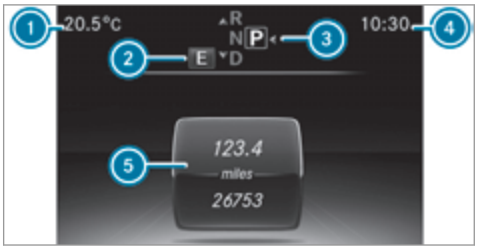

1. Outside temperature
2. Drive program
3. Transmission position (→ page 164)
4. Time
5. Display section

Further displays in the multifunction display:

- Gearshift recommendation (→ page 167)
- Parking Pilot activated
- Parking Assist PARKTRONIC deactivated
- Cruise control (→ page 193)

- LIM Limiter (→ page 193)
- Distance Pilot DISTRONIC (→ page 202) (→ page 196)
- Steering Pilot (→ page 202)
- ECO start/stop function
- HOLD HOLD function (→ page 204)
- Adaptive Highbeam Assist Plus (→ page 130)
- 120 km/h Maximum permissible speed exceeded (for certain countries only)

Adjusting the instrument lighting

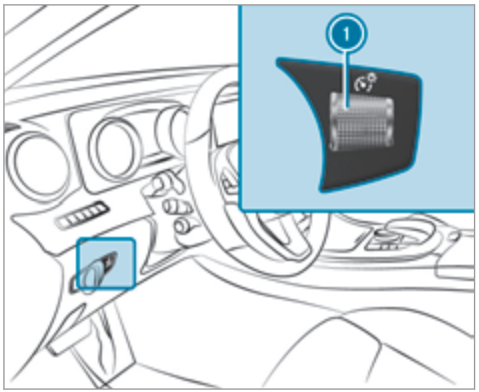

▶ Turn brightness control 1 up or down.
The lighting of the instrument display and in the controls in the vehicle interior is adjusted.

Menus and submenus

Functions in the Service menu of the on-board computer

On-board computer:

↳ Service

▶ **To select the function:** swipe upwards or downwards on the left-hand side of Touch Control.

▶ Press the left-hand Touch Control.

Functions in the Service menu:

- Message memory (→ page 375)
- AdBlue: Adblue® range
- Tyre pressure:
  - Restarting the tyre pressure loss warning system (→ page 347)
  - Checking the tyre pressure with the tyre pressure monitoring system (→ page 343)
  - Restarting the tyre pressure monitoring system (→ page 343)

- ASSYST PLUS: call up the service due date (→ page 302)
- Engine oil level

Calling up the Assistance graphic display

On-board computer:

Assistance

The following displays are available from the Assistance graphic menu:

- Assistance graphic
- Attention level (→ page 230)

▶ **To switch between the displays:** swipe upwards or downwards on the left-hand side of Touch Control.

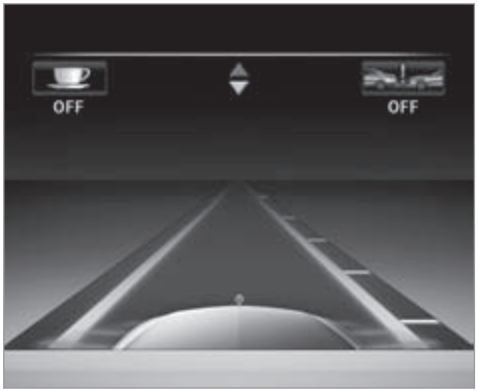

Status displays in the Assistance graphic:

- OFF: ATTENTION ASSIST deactivated
- OFF: Active Brake Assist deactivated
- Light lane markings: Active Lane Keeping Assist activated
- Green lane markings: Active Lane Keeping Assist actived
- Grey radar waves next to vehicle: Blind Spot Assist activated
- Green radar waves next to vehicle: Blind Spot Assist actived
- Display of Distance Pilot DISTRONIC (→ page 196)

Calling up displays in the Trip menu

On-board computer:

Trip

▶ **To select a display:** swipe upwards or downwards on the left-hand Touch Control.

Displays in the Trip menu:

- Standard display
- Range and current fuel consumption

  A recuperation display is also available for certain engines. If there is only a small amount of fuel left in the fuel tank, the display shows a vehicle being refuelled instead of the range.
- ECO display (→ page 162)
- Trip computer From start and From reset

- Digital speedometer



Example: standard display
1 Trip distance
2 Total distance recorder



Example: trip computer
1 Total distance recorder
2 Driving time
3 Average speed
4 Average fuel consumption

Resetting values in the Trip menu of the on-board computer

On-board computer:

↳ Trip

You can reset the values of the following functions:

- Trip distance
- Trip computer "From start" and "From reset"
- ECO display

▶ **To select the function to be reset:** swipe upwards or downwards on the left-hand Touch Control.
▶ Press the left-hand Touch Control.
▶ Select Yes.
▶ Press the left-hand Touch Control.

If you press and hold the left-hand side of Touch Control, the function will be reset immediately.

Calling up navigation instructions in the on-board computer

On-board computer:

↳ Navigation



Example: no change of direction announced

1. Distance to the next destination
2. Estimated arrival time
3. Distance to the next change of direction
4. Current road



Example: change of direction announced

1. Road to which the change of direction leads
2. Distance to the change of direction
3. Change-of-direction symbol
4. Recommended lane and new lane during a change of direction (white)
5. Possible lane
6. Lane not recommended (dark grey)

Further possible displays in the Navigation menu:

- Direction of travel: display of direction of travel and road currently being travelled on.
- New route... or Calculating route...: a new route is calculated.
- Road not mapped: the road is unknown, e.g. newly built roads.
- No route: no route could be calculated to the selected destination.
- Off map: the map for the current location is not available.
- Area of destination reached: you have reached the area of destination.
- 🏁: you have reached the destination or an intermediate destination.

▶ **To exit the menu:** press the back button on the left.

Selecting radio stations using the on-board computer

On-board computer:

→ Radio



1 Frequency range
2 Station
3 Name of track
4 Name of artist

When you select a station in the presets, the preset appears next to the station name. When you select a saved station in the frequency range, an asterisk appears next to the station name.

- **To select a radio station:** swipe upwards or downwards on the left-hand Touch Control.

Selecting the frequency range or station preset

- Press the left-hand Touch Control.
- **To select the frequency range/station preset:** swipe upwards or downwards on the left-hand Touch Control.
- Press the left-hand Touch Control.

Playing back media using the on-board computer

On-board computer:

→ Media

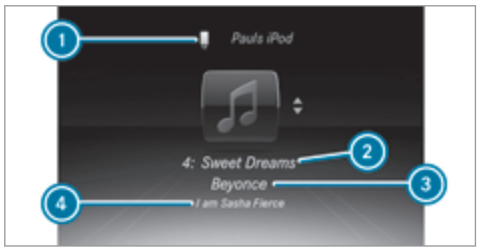

1 Media source
2 Current track and track number
3 Name of artist
4 Name of album

The folder name also appears in the display.

- **To change tracks in the active media source:** swipe upwards or downwards on the left-hand side of Touch Control.

Changing the media source

- Press the left-hand Touch Control.
- **To select a media source:** swipe upwards or downwards on the left-hand side of Touch Control.
- Press the left-hand Touch Control.

Dialling telephone numbers using the on-board computer

Requirements:

- Mobile phone connected to the multimedia system

On-board computer:

→ Telephone

WARNING Risk of distraction from information systems and communications equipment

If you operate information and communications equipment integrated in the vehicle when driving, you will be distracted from the traffic situation. This could also cause you to lose control of the vehicle.

- Only operate this equipment when the traffic situation permits.
- If you cannot be sure of this, stop the vehicle whilst paying attention to road and traffic conditions and operate the equipment with the vehicle stationary.

When telephoning, you must observe the legal requirements for the country in which you are currently driving.

Vehicles with the Audio 20 multimedia system: the most recently dialled telephone numbers are displayed in the Telephone menu.

- **To select the telephone number:** swipe upwards or downwards on the left-hand Touch Control.
- Press the left-hand Touch Control.
  If there is only one telephone number saved to an entry: the telephone number is selected.
- **If there are multiple telephone numbers saved to an entry:** swipe upwards or downwards on the left-hand Touch Control to select the desired telephone number.
- Press the left-hand Touch Control.
  The telephone number is dialled.

The following displays may appear instead of the telephone numbers dialled:

- Please wait...: the application is starting. When a Bluetooth® connection to the mobile phone is not established, the menu for authorising and connecting a mobile phone is displayed in the multimedia system .
- Updating data...: the call list is being updated.
- Importing contacts...: the contacts from the mobile phone or from a storage medium are imported.

Accepting/rejecting a call

When you receive a call, a message appears in the Head-up-Display Incoming call.

- Swipe upwards or downwards on the left-hand Touch Control and select (Accept) or (Reject).
- Press the left-hand Touch Control.

The call may be accepted/rejected using the or buttons on the steering wheel.

Adjusting the head-up display settings in the on-board computer

On-board computer:

HUD

The following head-up display settings can be adjusted:

- Position
- Brightness
- Display content

▶ **To select the setting:** swipe upwards or downwards on the left-hand Touch Control.

▶ Press the left-hand Touch Control.

▶ **To adjust the value:** swipe upwards or downwards on the left-hand Touch Control.

▶ Press the left-hand Touch Control.

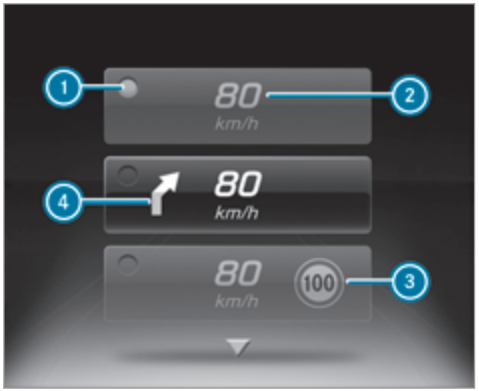

1 Currently selected setting
2 Digital speedometer
3 Traffic Sign Assist
4 Navigation displays

Head-up Display

Function of the Head-up-Display

The head-up display projects information from the navigation system and the driver assistance system above the cockpit into the driver's field of vision.

Display elements

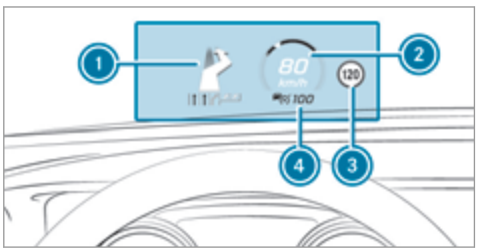

1 Navigation messages
2 Current speed
3 Detected instructions and traffic signs
4 Set speed in the driver assistance system (e.g. cruise control)

When you receive a call, a message appears in the Head-up-Display Incoming call.

System limits

The visibility is influenced by the following conditions:

- seat position
- the positioning of the display image
- light conditions
- wet road surfaces
- objects on the display cover
- polarisation in sunglasses

Switching the head-up display on/off

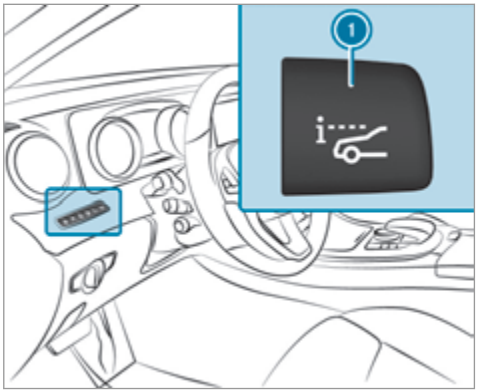

▶ Press button 1.

Overview and operation

Overview of the multimedia system

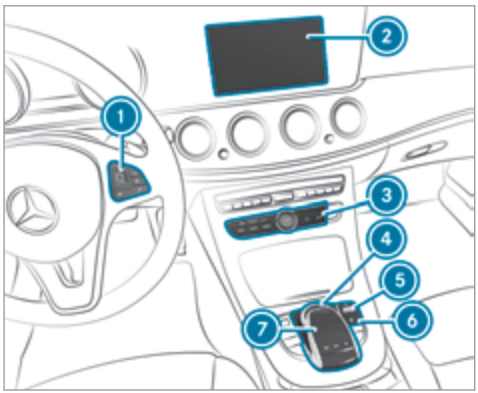

1 Touch Control
2 Display
3 NAVI, RADIO, MEDIA, TEL, buttons, calls up main functions
4 Controller
5 Control knob, adjusts the volume and switches the sound on or off
6 button, switches the multimedia system on or off
7 Touchpad

The three central controls are Touch Control 1, controller 4 and touchpad 7.

Notes on the display

NOTE Scratching of the display

The display has a highly sensitive, high-gloss surface. There is a risk of it becoming scratched.

Avoid touching the display.

Observe the notes on cleaning.

Observe the notes on caring for the interior (→ page 315).

Automatic temperature-controlled switch-off feature: if the temperature is too high, the brightness is initially reduced automatically. The display may then switch off completely for a while.

If you are wearing polarised sunglasses, it may be difficult to read the display.

Central controls overview

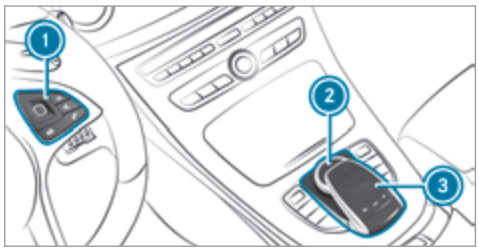

1 Touch Control
2 Controller
3 Touchpad

The list shows operating options and provides operating examples.

Controller

- **slide** ◀◎▶ left or right
  - selects a radio station
  - calls up a list
- **slide** ▲◎▼ up or down
  - highlights a preset in the station
  - selects a system language
- **slide** ◤◎◢ diagonally
  - moves the crosshair across the map
- **turn** ⟮◎⟯
  - sound: sets the treble, mid-range and bass
  - selects a favourite
  - connects a mobile phone: selects a mobile phone from the list of detected mobile phones
- **press**
  - stores radio stations
  - confirms a selection or entry

Touch Control and touchpad (single-finger swipe)

- **swipe** left or right
  - selects a radio station
  - calls up a list
- **swipe** up or down
  - highlights a preset in the station
  - selects a system language
- **swipe** diagonally
  - moves the crosshair across the map
- **press**
  - stores radio stations
  - confirms a selection or entry

Touchpad (two-finger swipe)

- **turn** right or left using two fingers
  - tone settings: adjusts the treble, mid-range and bass
- move two fingers **apart** or **together**
  - changes the map scale (zoom in or out)

Touch Control

Operating Touch Control

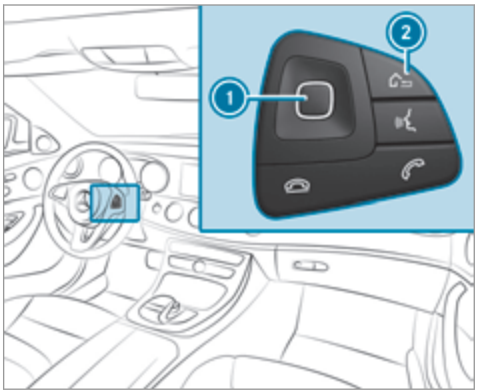

- ▶ **To select a menu item:** swipe up, down, left or right on Touch Control (1).
- ▶ Press Touch Control (1).
- ▶ **To open a list:** press Touch Control (1).
- ▶ **To close a list:** press the (2) button.

- **To move the digital map:** swipe in any direction.

Setting the sensitivity
Multimedia system
→ Vehicle ▸▸ System settings
- Select Touch Control sensitivity.
- Set the sensitivity.

Operating the controller

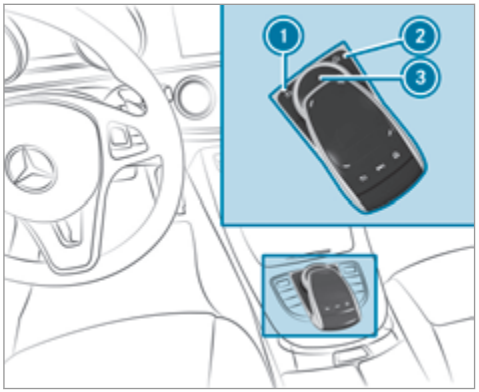

1. ⮌ button, to return to the previous display (press briefly), to call up the basic menu (press and hold)
2. Calls up the touchpad ⌂ button, calls up favourites
3. Controller

Controller operating options:
- Turn ◎ left or right.
- Slide ◎ left or right.
- Slide ◎ up or down.
- Slide ◎ diagonally.
- Press ◎ briefly or press and hold.

Using the controller, you can:
- navigate through menus and lists
- save stations or contacts
- create favourites
- adjust tone settings
- enter characters

Touchpad

Switching the touchpad on/off
Multimedia system:
→ Vehicle ▸▸ System settings
- **Touchpad without handwriting recognition:** switch Activate touchpad on ☑ or off ☐.

- **Touchpad with handwriting recognition:** select Touchpad.
- Switch Activate touchpad on ☑ or off ☐.

Operating the touchpad

Requirement:
The touchpad is switched on (→ page 257).

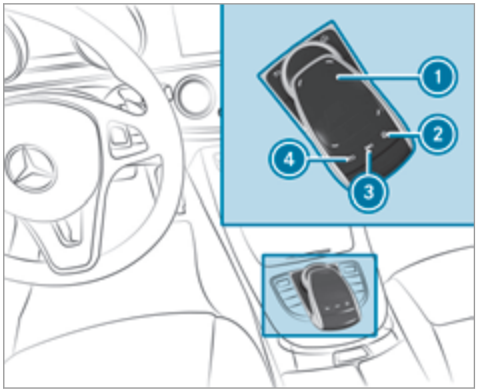

1. Touchpad
2. ⌂ button, calls up favourites
3. ⏭ button, calls up the audio menu
4. ⮌ button, returns to the previous display (press briefly), calls up the basic menu (press and hold)

You can navigate in menus and lists via touch-sensitive surface 1 by using **a single-finger swipe**.

- **To select the menu item:** swipe up, down, left or right.
- Press the touchpad.
- **To close and open lists:** swipe left or right.
- **To move the digital map:** swipe in any direction.

Use the following functions with a **two-finger swipe**:

- **To show or hide the audio menu:** swipe up or down using two fingers.
- **To zoom in and out of the map:** move two fingers apart or together.
- **To increase or reduce the vehicle settings and tone settings:** turn two fingers clockwise or anti-clockwise.

Handwriting recognition: switching the read-aloud function on/off

Requirement:
The touchpad is equipped with handwriting recognition.

Multimedia system:

Vehicle ▸▸ System settings ▸▸ Touchpad

- Switch Read out handwriting recognition on ☑ or off ☐.

Handwriting recognition: selecting an input language

- Select .
- Select an input language.

Selecting a station and track using the touchpad

- Swipe upwards using two fingers on the touchpad.
  A control menu shows the current audio source.
- Swipe left or right using one finger.
  Radio: the previous or next station is set.
  Media source: the previous or next track is selected.
- **To hide the control menu:** swipe down on the touchpad using two fingers.

Main functions

Calling up the main functions

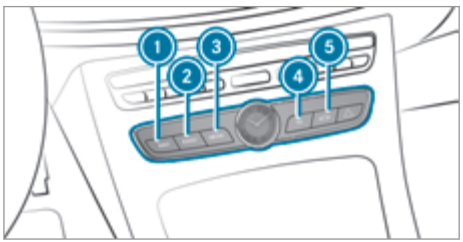

- 1 NAVI button: switches navigation on
- 2 RADIO button: switches the radio on
- 3 MEDIA button: switches the audio source on
- 4 TEL button: switches telephone mode on
- 5 button: calls up vehicle functions

Alternatively:

- When the basic menu of a main function is shown, press the button.
- **To select a main function:** turn and press the controller.

or

- Swipe left or right on the touchpad and then press the touchpad.

Calling up menus on the multimedia system

Calling up a menu

- Call up a main function (→ page 259).
- **To show the menu:** swipe up or down on the touchpad.

or

- Slide the controller up or down.
  The marker is shown either in the main function line or menu bar.

▶ **To select a menu item:** swipe left or right on the touchpad and then press it.

or

▶ Slide the controller to the left or right and press it.
Main function line (top) is selected: another main function is called up.

Menu bar (bottom) is selected: a menu appears.

Calling up an operating mode for a main function

▶ Call up a main function (→ page 259).

▶ Select the main function in the main function line again.

▶ Swipe left or right on the touchpad and press it.

or

▶ Slide the controller to the left or right and press it.
Depending on the main function, a range of operating modes are available.

For media selection, the following media sources can be selected, for example:

- Memory card
- Media Interface 1
- Media Interface 2
- Bluetooth audio
- Information on media

▶ Alternatively for media selection: select Devices in the lower menu bar.

▶ Swipe up or down on the touchpad and press it.

or

▶ Slide the controller up or down and press it.
The media source is selected. Playback starts.

Favourites

Overview of favourites

Favourites offer you quick access to frequently used applications. It is possible to create 20 favourites in total.

The following functions are available:

- add **pre-defined favourites** from the following categories:
  - Navigation
  - Entertainment
  - Tel/
  - Vehicle
  - Climate control
- add **your own favourites**
- rename a favourite
- move a favourite
- delete a favourite

Calling up favourites

▶ Press the ⌂ button.
The favourites are displayed.

▶ Swipe left or right on the touchpad and press it.

or

▶ Turn and press the controller.

Leaving the Favourites menu

- Press the ⌂ button again.

Adding a favourite

Adding a pre-defined favourite

- Press the ⌂ button.
  The favourites are displayed.
- Swipe down on the touchpad or slide the controller down.
  The Favourites menu appears.
- Select Reassign.
  The categories are displayed.
- Select a category.
  The favourites are displayed.
- Select a favourite.
- Add a favourite at the desired position.
  If a favourite has already been added at this position, it will be overwritten.

Example: adding your own favourite

- Select Vehicle.
- Select Full screen: 'Consumption'.
- Press and hold the ⌂ button until the favourites are displayed.
- Add a favourite at the desired position.

Renaming a favourite

- Press button ⌂.
  The favourites are displayed.
- Select a favourite.
- Swipe down on the touchpad or slide the controller down.
  The Favourites menu appears.
- Select Rename.
- enter characters
- Confirm the entry.

Moving a favourite

- Press the ⌂ button.
  The favourites are displayed.
- Select a favourite.
- Swipe down on the touchpad or slide the controller down.
  The Favourites menu appears.
- Select Move.
- **To create a favourite at a desired position:** swipe left or right on the touchpad and press it.

or

- Turn and press the controller.
  If a favourite has already been added at this position, it will be overwritten.

Deleting a favourite

- Press button ⌂.
  The favourites are displayed.
- Select a favourite.
- Navigate downwards once.
  The Favourites menu appears.
- Select Delete.
- Select Yes.

Switching the sound on/off

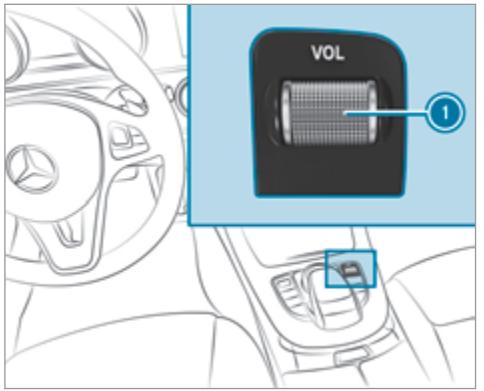

- **To switch off:** press control knob (1). The [🔇] symbol appears in the status line.
  You will also hear traffic announcements and navigation announcements even when the sound is muted.
- **To switch on:** change the media source or adjust the volume.

Entering characters

Using the character input function

On Touch Control

- Select a character in the character bar. Depending on the target entry, either a full set of characters is available or, alternatively, only those characters that are available on the basis of the characters that have already been entered.

On the controller

- Select a character in the character bar. Depending on the target entry, either a full set of characters is available or, alternatively, only those characters that are available on the basis of the characters that have already been entered.

On the touchpad

- Write the characters on the touch-sensitive surface of the touchpad.
  Handwriting recognition supports you by means of character suggestions and a read-aloud function.

Switching between central operating controls

- **To activate Touch Control:** press Touch Control.
- **To activate the controller:** press the controller.
- **To activate the touchpad:** press the touchpad.

Characters can be entered using the following methods:

- using a keyword search for a track or artist
- connecting the mobile phone to the multimedia system by entering the passkey
- entering a phone number
- entering a web address

Entering characters using the controller

Entering characters

- Turn {◎}, slide ←◎→ or ↑◎↓ and press the controller.

Use the following editing functions:

- ABC or abc

Switches to upper-case or lower-case letters

- [•••]
  Switches to special characters and symbols
- [⌨]
  Changes the language
- [↑] [↓]
  Selects the input line
- [←] [→]
  Moves the cursor within the input line
- [c]
  Deletes a character or an entry
- [⮌]
  Cancels character entry

Deleting a character or an entry

- **To delete a character:** when [c] is highlighted, press the controller.
- **To delete an entry:** when [c] is highlighted, press and hold the controller until the entry has been deleted.

Confirming an entry

- Select [ok].

Entering characters on the touchpad

Entering characters

- Use one finger to write characters on the surface.
  The character is entered in the input line. If different interpretations are possible, character suggestions are displayed.

Selecting a character suggestion

- Turn the controller.
- Press the touchpad.
- Resume character input.

The following editing functions can be used:

- [⌨]
  Changes the language
- [T/]
  Selects the input line
  Moves the cursor within the input line
- [⮌]
  Cancels character entry

Selecting the input line

- Select [T/].
- Swipe up or down.

Moving the cursor within the input line

- Select [T/].
- Swipe to the left or right.

Deleting characters

- When an input line is selected, swipe left.

Confirming an entry

- Press the touchpad.

System settings

Display

Configuring display settings
Multimedia system:
↳ Vehicle ⏩ System settings ⏩ Display

Display design

▶ Select Day design, Night design or Automatic.

Display brightness

▶ Select Brightness.
▶ Select a brightness value.

Switching off the display
Multimedia system:
↳ Vehicle

▶ Select Display off.
The display is switched off.

Time and date

Setting the time and date automatically
This function is only available in vehicles with GPS reception.

Multimedia system:
↳ Vehicle ⏩ Time

▶ Activate ☑ or deactivate ☐ Automatic time settings.

Setting the time zone
Multimedia system:
↳ Vehicle ⏩ Time ⏩ Time zone:

A list of countries is displayed.

▶ Select a country ●.
Depending on the country, time zones are displayed.
▶ Set the time zone.
The time zone set is displayed after Time zone:.

Setting summer time
The Summer Time and Summer Time setting options cannot be selected in all countries.

Multimedia system:
↳ Vehicle ⏩ Time

Vehicles with GPS

▶ Select Summer Time.
▶ Select On, Off or Automatic.
- Automatic: the automatic changeover to summer time is not available for all time zones.
- Off: standard time is set.

Vehicles without GPS

▶ Activate ☑ or deactivate ☐ Current time: Summer Time.
▶ Summer time changeover: select Summer Time setting.
▶ Select Automatic, Summer Time or Standard time.
The current setting is marked with ●.
The local time is set one hour forward or back.
- Automatic: the automatic changeover to summer time is not available for all time zones.

Setting the time and date format
Multimedia system:
→ Vehicle ▸▸ Time ▸▸ Format

▶ Set the date and time format ●.

Setting the time and date manually
Multimedia system:
→ Vehicle ▸▸ Time

Vehicles with GPS
It may be useful to set the time manually in the following situations:

- a country is not contained in the list of time zones
- a time differing from the local time is set

▶ Select Set time manually.
▶ Set the hours.
▶ Navigate to the right to set the minutes.
▶ Set the minutes.
The Automatic time settings function is deactivated ☐.

ⓘ The time can be set back by 12 hours and forward by 14 hours.

Vehicles without GPS
▶ Select Set time or Set date.
▶ Set the time or date.

The various time and date settings must be set correctly to enable a reliable Internet connection to be established.

Bluetooth®

Bluetooth® settings
Bluetooth® technology is a standard for short-range wireless data transfer up to approximately 10 m. You can use Bluetooth® to connect your mobile phone to the multimedia system and use the following functions, for example:

- hands-free system with access to the following options:
  - phone book (→ page 273)
  - call lists (→ page 275)
  - messages (→ page 276)
- Internet connection
- listening to music via Bluetooth® audio (→ page 295)
- transferring business cards (vCards) into the vehicle

Bluetooth® is a registered trademark of Bluetooth Special Interest Group (SIG) Inc.

ⓘ Internet connection via Bluetooth® is not available in all countries.

Activating/deactivating Bluetooth®
Multimedia system:
→ Vehicle ▸▸ System settings ▸▸ Activate Bluetooth

▶ Activate ☑ or deactivate ☐ Bluetooth®.

Activating/deactivating automatic volume adjustment

Multimedia system:

↳ Vehicle ⏩ System settings ⏩ Automatic volume adjustment

Automatic volume adjustment compensates for differing volumes when changing between audio sources.

▶ Activate ☑ or deactivate ☐ the function.

System language

Notes on the system language

This function allows you to determine the language for the menu displays and the navigation announcements. The selected language affects the characters available for entry. The navigation announcements are not available in all languages. If a language is not available, the navigation announcements will be in English.

Setting the system language

Multimedia system:

↳ Vehicle ⏩ System settings ⏩ Language

▶ Set the language.

Setting the distance unit and temperature unit

Multimedia system:

↳ Vehicle ⏩ System settings ⏩ Units

Distance

▶ Select Units.

▶ Select km or mi.

▶ Switch Additional speedometer on ☑ to display in the instrument cluster's multifunction display.

Temperature

▶ Select Temperature gauge.

▶ Select Outside or Cooling.

Data import and export

Data import/export function

The following functions are possible:

- transferring data from one system or vehicle to another system or vehicle.
- creating a backup copy of your personal data and loading it again.
- protecting your personal data against unwanted export with PIN protection.

You can either use an SD card or a USB storage device as temporary storage.

ⓘ Please note that the NTFS file system is not supported. The FAT32 file system is recommended.

Importing/exporting data

! NOTE Data loss

▶ Do not remove the data storage medium when data is being exported.

Mercedes-Benz is not liable for any loss of data.

Requirements:
- The vehicle is stationary.
- The ignition is switched on or the vehicle has been started.
- The SD card is inserted (→ page 292).

Multimedia system
→ Vehicle ▸▸ System settings ▸▸ Import/export data

▶ Select Import data or Export data.

Importing

▶ Select a data storage medium.
A prompt appears asking whether you really wish to overwrite the current data.

The existing data in the multimedia system is overwritten, e.g. address data. A message appears.

The multimedia system is restarted once the data has been imported.

Exporting
If PIN protection is activated, your PIN is requested.

▶ Enter your four-digit PIN.

▶ Select a data storage medium.
The data is exported. The data export may take several minutes.

Activating/deactivating PIN protection for data export
Multimedia system:
→ Vehicle ▸▸ System settings ▸▸ Import/export data

▶ **To activate:** activate Activate PIN protection ☑.

▶ Enter your four-digit PIN.

▶ Enter your four-digit PIN again.
PIN protection is activated when both PINs match.

▶ **To deactivate:** deactivate Activate PIN protection ☐.

▶ Enter your four-digit PIN.

ⓘ If you have forgotten your PIN, a Mercedes-Benz service centre can deactivate your PIN protection for you.

Alternatively: you can deactivate PIN protection by resetting your personal data (→ page 267).

Reset function

Multimedia system:
→ Vehicle ▸▸ System settings ▸▸ Reset

The multimedia system is reset to the factory settings.

Personal data is deleted, for example:
- station presets
- connected mobile phones

▶ Select Yes.
A prompt appears asking whether you wish to reset.

No selected: the process is cancelled.

▶ Select Yes.
The multimedia system is reset to factory settings and restarted.

Garmin® MAP PILOT navigation module

Overview of Garmin® MAP PILOT navigation module

DANGER Risk of fatal injury caused by swallowing SD memory cards

SD memory cards are small parts.

They can be swallowed and cause choking.

- ▶ Keep SD memory cards out of the reach of children.
- ▶ Seek medical attention immediately if a SD memory card has been swallowed.

WARNING Risk of distraction from information systems and communications equipment

If you operate information and communications equipment integrated in the vehicle when driving, you will be distracted from the traffic situation. This could also cause you to lose control of the vehicle.

- ▶ Only operate this equipment when the traffic situation permits.
- ▶ If you cannot be sure of this, stop the vehicle whilst paying attention to road and traffic conditions and operate the equipment with the vehicle stationary.

During operation of the Garmin® MAP PILOT, always observe the following:

- the legal requirements for the country in which you are currently driving
- road and traffic rules and regulations always have priority over Garmin® MAP PILOT driving recommendations

Observe the following notes on the operating instructions and updates:

- the Garmin® MAP PILOT operating instructions are stored on the SD memory card as a PDF file.
- the SD card box contains a printed quick guide.
- you can obtain digital map and software updates from a Mercedes-Benz service centre.

  For some countries, digital map and software updates are available in the form of a download or an SD memory card.

  For downloads, visit http://shop.mercedes-benz.com and follow the information in the Garmin® MAP PILOT section.

  Further information (see the manufacturer's operating instructions).

Switching the Garmin® MAP PILOT navigation module on

NOTE Damage caused by high temperatures

High temperatures can damage the SD memory card.

- ▶ Remove the SD memory card after use and take it out of the vehicle.

Multimedia system:

→ Navi

- Alternatively: press the NAVI button.
- Inserting the SD memory card (→ page 292).

Telephone

Telephony

Telephone menu overview

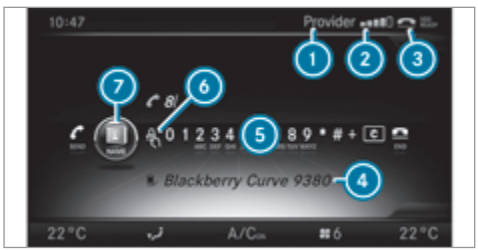

1. Mobile phone network provider
2. Signal strength of the mobile phone network
3. (telephone ready) or (call active)
4. Bluetooth® device name of the currently connected mobile phone
5. Telephone menu character bar
6. To enter characters using the touchpad
7. To display the phone book

Symbols 1 to 4 are not shown until after a mobile phone has been connected to the multimedia system. The symbols depend on your mobile phone and your mobile phone network provider.

The Bluetooth® interface is available to you for telephony. The mobile phone is connected directly via the multimedia system.

You can also use the optionally available telephone module with Bluetooth® (SAP profile) for telephony.

If the mobile phone connected supports the MAP Bluetooth® profile (**M**essage **A**ccess **P**rofile), the menu item is available.

Notes on telephony

WARNING Risk of distraction from operating integrated communication equipment while the vehicle is in motion

If you operate communication equipment integrated in the vehicle when driving, you will be distracted from the traffic situation. This could also cause you to lose control of the vehicle.

- Only operate this equipment when the traffic situation permits.
- If you cannot be sure of this, stop the vehicle whilst paying attention to road and traffic conditions and operate the equipment with the vehicle stationary.

WARNING Risk of distraction from operating mobile communication equipment while the vehicle is in motion

If you operate mobile communication equipment when driving, you will be distracted from the traffic situation. This could also cause you to lose control of the vehicle.

Only operate this equipment when the vehicle is stationary.

You must observe the legal requirements for the country in which you are currently driving when operating mobile communication equipment in the vehicle.

Telephony is possible via:

- the Bluetooth® interface
- the telephone module with Bluetooth® (SAP profile)

Bluetooth® profile overview

Bluetooth® profile of the mobile phone	Function
PBAP (**P**hone **B**ook **A**ccess **P**rofile)	Contacts are automatically displayed in the multimedia system
MAP (**M**essage **A**ccess **P**rofile)	Message functions can be used

Further information can be obtained from a Mercedes-Benz service centre or at: http://www.mercedes-benz.com/connect.

HD Voice®

- To improve voice quality, the multimedia system supports telephone calls in HD Voice®.
- In order to use this function, the mobile phones and the mobile phone network provider of the person you are calling must support HD Voice®.

Depending on the quality of the connection, the voice quality may fluctuate.

The following situations can lead to the call being disconnected while the vehicle is in motion:

- there is insufficient network coverage in the area
- you move from one GSM or UMTS transmitter/receiver area (cell) into another and no communication channels are free
- the SIM card used is not compatible with the network available
- a mobile phone with "Twincard" is logged into the network with the second SIM card at the same time

Disconnecting a mobile phone (deauthorising)

Multimedia system:

Tel/🌐 ▸▸ Telephone ▸▸ Connect device

▶ Highlight the mobile phone in the device list.

▶ Select [☰].

▶ Select De-authorise.

▶ Select Yes.

Switching mobile phones

Requirement:

The mobile phones are authorised .

Multimedia system:

Tel/🌐 ▸▸ Telephone ▸▸ Connect device

▶ Select the mobile phone from the device list.

ⓘ Only one mobile phone can be connected at any one time. The mobile phone that is currently connected is indicated with a point ●.

Setting the reception and transmission volume

Requirement:
A mobile phone is connected (authorised) .

Multimedia system:

→ Tel/🌐 ▸▸ Telephone ▸▸ Connect device

This function ensures optimal language quality.

- ▶ Highlight the mobile phone in the device list.
- ▶ Select ☰.
- ▶ Select Reception volume or Transmission volume.
- ▶ Set the volume.

Further information on the recommended reception and transmission volume: http://www.mercedes-benz.com/connect

Universal smartphone cradle

Features of the universal smartphone cradle

- The smartphone cradle is suitable for mobile phones of different sizes.
- An integrated aerial improves mobile phone reception.
- A ventilation system protects the mobile phone from overheating.

More information is available at: http://www.mercedes-benz.com/connect

Using the universal smartphone cradle

Requirements:

- the mobile phone is connected to the multimedia system for use with the hands-free system .
- The mobile phone must lie flat against the base of the smartphone cradle.

  The use of very thick or uneven protective covers may reduce the reception.

- ▶ **Adjusting the inclination adjuster:** press the button on the left edge of the smartphone cradle.
  An inclination adjuster extends from the back of the smartphone cradle and locks in place.

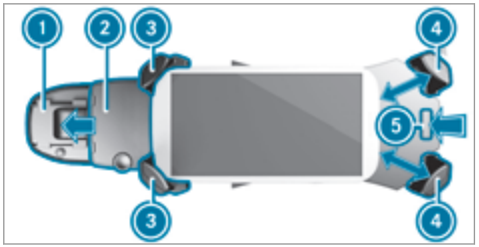

- ▶ **To mount a smartphone cradle:** slide the smartphone cradle (2) onto the contact plate (1) in the centre console.
- ▶ **To adjust a smartphone cradle:** press button (5). At the same time, move lower brackets (4) into the desired position.
- ▶ **To insert a mobile phone:** connect the cable with the USB port in the stowage compartment in the centre console.
- ▶ Align the mobile phone with upper brackets (3) and slide up to the desired height.
- ▶ Insert mobile phone.
  The mobile phone will automatically be held in the smartphone cradle.

ⓘ Make sure air flow to the mobile phone is not restricted.

Removing the universal smartphone cradle

Requirement:
There is no mobile phone in the smartphone cradle.

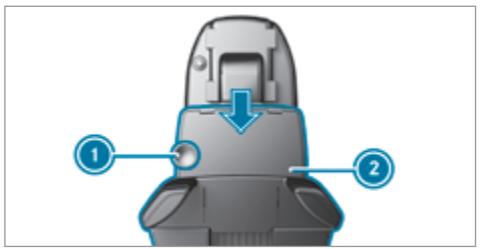

▶ Press button ① on the front side of smartphone cradle ②. At the same time, pull the smartphone cradle off the contact plate.

Calls

Telephone operation
Multimedia system:
→ Tel/🌐 ▸▸ Telephone

Making a call

▶ Select numbers.
▶ Select 📞.
The call is made.

Accepting a call

▶ Select 📞 Accept.

Rejecting a call

▶ Select 📵 Reject.

Ending a call

▶ Select 📵.

Activating functions during a call

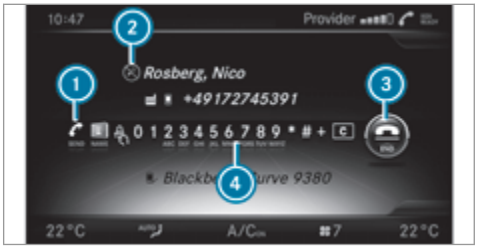

① To add a call
② Microphone status display
③ To end a call
④ Character bar

▶ **To add a call:** select 📞.
▶ Make the call.
▶ **To switch the microphone on/off:** navigate downwards.
The menu bar is shown.
▶ Select Microphone on or Microphone off.
▶ **To end the call:** select 📵.

▶ **To send DTMF tones:** enter characters using the character bar.

Conducting calls with several participants

Requirements:
- the mobile phone is connected to the multimedia system .
- at least one call is added (→ page 272).

Switching between calls

▶ Select [ ] (1) or [ ] (2).
The selected call is active. The other call is on hold.

Activating or ending a call on hold

▶ Select [ ] Continue or [ ] End call.

Conducting a conference call

▶ Select Conference in the telephone menu.
The new participant is included in the conference call.

Ending an active call

▶ Select [ ].

ⓘ On some mobile phones, the call on hold is activated as soon as the active call is ended.

Incoming call during an existing call (call waiting)

Requirement:
There is an active call (→ page 272).

If you receive a call while already in a call, a message is displayed. An acoustic signal also sounds.

▶ Select [ ] Accept.
The incoming call is active. The previous call is on hold.

▶ Select [ ] Reject.

ⓘ This function and behaviour depends on your mobile phone network provider and the mobile phone (see the manufacturer's operating instructions).

Phone book

Overview of the phone book

The phone book of the mobile phone is automatically displayed in the multimedia system after the connection is established.

- 2,000 entries are reserved for permanently saved contacts in the multimedia system.
- 2,000 entries are reserved for contacts loaded from the mobile phone.

In the telephone book, you can carry out the following actions:

- searching for contacts (→ page 274).
- storing contacts (→ page 274).
- deleting contacts (→ page 275).

Symbol overview

Symbol	Explanation
[ ]	Contact stored in the multimedia system.
[ ]	Contact called up from a mobile phone.

Symbol	Explanation
	Contact imported from a memory card or a USB device.
	Contact imported via the Bluetooth® interface.

Downloading mobile phone contacts
Multimedia system:
Tel/ ▸▸ Telephone ▸▸ Options ▸▸ Call up contacts automatically

Automatic

- ▶ Allow automatic download ☑.

Manual

- ▶ Deactivate automatic download ☐.
- ▶ Select Call up contacts.

Searching for a contact in the phone book
Multimedia system:
Tel/ ▸▸ Telephone ▸▸ Phone book

- ▶ Select characters.
- ▶ Select ok.
  The contact is displayed.

Changing the display and the sorting criteria for contacts
Multimedia system:
Tel/ ▸▸ Telephone ▸▸ Options ▸▸ Name representation
The following options are available:

- Surname, first name
- Surname First name
- First name Surname

- ▶ Select an option.

Saving a mobile phone contact
Multimedia system:
Tel/ ▸▸ Telephone ▸▸ Phone book

- ▶ Search for a contact on the mobile phone (→ page 274).
- ▶ Select .
- ▶ Select Save.
  The contact is identified by the symbol in the phone book.

Importing contacts into the telephone book
Via Options, you can import contacts into the telephone book as electronic business cards using a memory card, USB or Bluetooth®.

Source	Requirements:
Memory card	The SD memory card is inserted.
USB device	The USB device is inserted into the USB port.
Bluetooth® connection	If the sending of vCards is supported via Bluetooth®, vCards can be received on mobile phones or netbooks, for example. Bluetooth® is activated in the multimedia system and on the respective device (see the manufacturer's operating instructions).

Deleting a contact from the phone book
Multimedia system:
→ Tel/ ▸▸ Telephone ▸▸ Phone book

You can delete contacts stored in the vehicle.

- Switch off automatic download of mobile phone contacts (→ page 274).
- Highlight the contact in the phone book.
- Select .
- Select Delete contact.
- Select Yes.

Call lists

Overview of the call lists
If your mobile phone supports the PBAP Bluetooth® profile, the call lists from the mobile phone are displayed in the multimedia system. When connecting the mobile phone, you may have to confirm the connection for the PBAP Bluetooth® profile (see manufacturer's Owner's Manual).

If your mobile phone does not support the PBAP Bluetooth® profile, the multimedia system generates its own call lists. These are not the same as the call lists in your mobile phone.

If the contact for an incoming call is not yet saved in the multimedia system, you can use the call list to save the telephone number.

Making a call from call lists
Multimedia system:
→ Tel/ ▸▸ Telephone ▸▸ Call lists

- Select Incoming calls or Calls dialled.
- Select an entry.
- Make the call.

Displaying details from a list entry
Multimedia system:
→ Tel/ ▸▸ Telephone ▸▸ Call lists

- Select Incoming calls or Calls dialled. The list is displayed.
- Highlight the entry.
- Select .
- Select Details.

Speed dial list

Calling up the speed dial list
Multimedia system:
→ Tel/🌐 ▸▸ Telephone ▸▸ Call lists
▶ Select Speed dial preset list.

Setting up a speed dial list
Multimedia system:
→ Tel/🌐 ▸▸ Telephone ▸▸ Phone book
▶ Select the contact.
▶ Select [☰].
▶ Select Assign speed dial preset.
▶ Select a preset for the speed dial.

Deleting speed dial presets
Multimedia system:
→ Tel/🌐 ▸▸ Telephone ▸▸ Call lists ▸▸ Speed dial preset list

Deleting a speed dial preset
▶ Highlight the preset you want to delete.
▶ Select [☰].
▶ Select Delete speed dial preset.
▶ Select Yes.

Deleting all speed dial presets
▶ Highlight a preset.
▶ Select [☰].
▶ Select Delete all speed dial presets.
▶ Select Yes.

Messages (text messages and e-mails)

Notes on messages
If the connected mobile phone supports the Bluetooth® MAP profile, the message function can be used on the multimedia system. With some mobile phones, some settings still have to be made after connecting to the multimedia system (see the manufacturer's operating instructions).

New messages are identified by the ✉ symbol in the multimedia system display and an audible signal.

The 📨! symbol is displayed when the mobile phone's message memory is full.

Text messages cannot be written while the vehicle is in motion.

You can obtain further information about settings and supported functions of Bluetooth®-capable mobile phones from a Mercedes-Benz service centre or at: http://www.mercedes-benz.com/connect

Text message settings
Multimedia system:
→ Tel/🌐 ▸▸ Telephone ▸▸ ✉ ▸▸ Settings

Configuring an e-mail account
▶ Select an e-mail account.
The e-mail account is now configured.

Configuring the text messages or e-mails displayed
▶ Highlight Text msg. or an e-mail account.
▶ Select [☰].
A menu with the following options is shown:
- All messages
- New messages

- off (The messages are not displayed automatically.)

Reading messages
Multimedia system:
Tel/ ▸▸ Telephone ▸▸ ✉

In the message menu
Unread messages are displayed.

▶ Select a message.
The message text is displayed.

In the message folder
The message menu is displayed.

▶ Select ✉ SMS or ✉ E-mail.
▶ Select a message.
The message text is displayed.

Making a call from the messages menu
Multimedia system:
Tel/ ▸▸ Telephone ▸▸ ✉

Calling a text message sender

▶ Highlight the text message.
▶ Select [✎].

▶ Select Call sender.

Calling phone numbers from a message

▶ Call up a text message or e-mail.
▶ Select a phone number within the message.
▶ Select Call number.

Mercedes me connect

Notes on Mercedes me connect

Mercedes me connect provides the following services:

- Breakdown management
- Appointment requests or similar
- Accident management
- Mercedes-Benz emergency call system

The Mercedes-Benz Customer Centre and the Mercedes-Benz emergency call centre are available for you around the clock.

The Info call button, the breakdown assistance button and the emergency call button can be found on the overhead control panel of the vehicle (→ page 278).

You can also use the multimedia system to make the call (→ page 277).

Please note that Mercedes me connect is a Mercedes-Benz service. In emergencies, always call the national emergency services first using the standard national emergency service phone numbers. In emergencies, you can also use the Mercedes-Benz emergency call system (→ page 280).

Further information on Mercedes me connect, the provided service scope and operation: http://manuals.daimler.com/baix/cars/connectme/de_DE/index.html

Calling the Mercedes-Benz Customer Centre using the multimedia system

Requirements:

In order to be able to use the Mercedes me connect service in the vehicle, the following is required:

- You have access to a GSM network.
- The contract partner's GSM network coverage is available in the respective region.

- The ignition must be switched on so that vehicle data can be transferred automatically.

Multimedia system:

→ Tel/🌐 » Telephone

▶ Call up the phone book (→ page 274).

▶ Call Mercedes connect me.
After confirmation, the multimedia system sends the required vehicle data.

The data transfer is shown in the display. Then, you can select a service and be connected to a specialist at the Mercedes-Benz Customer Centre.

Further information on Mercedes me connect, the provided service scope and operation is available at: http://manuals.daimler.com/baix/cars/connectme/de_DE/index.html

Making a call via the overhead control panel

Requirements:

In order to be able to use the Mercedes me connect service in the vehicle, the following is required:

- You have access to a GSM network.
- The contract partner's GSM network coverage is available in the respective region.
- The ignition must be switched on so that vehicle data can be transferred automatically.

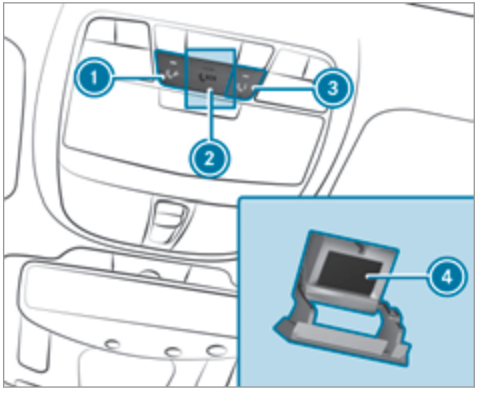

1 Breakdown assistance call
2 SOS button cover
3 MB Info call
4 SOS button

▶ **To make a breakdown assistance call:** press button 1.

▶ **To make an emergency call:** press SOS button cover 2 briefly to open.

- Press and hold SOS button (4) for at least one second.
- **To make an MB Info call:** press button (3).

An emergency call can be initiated even if a breakdown assistance or MB Info call is active. This has priority over all other active calls.

Calls via the overhead control panel are only possible with an available mobile phone network.

More information on Mercedes me connect and further services can be found at: http://www.mercedes.me

Information on the MB Info call
An Info call to the Mercedes-Benz Customer Centre has been initiated via the overhead control panel (→ page 278) or the multimedia system (→ page 277).

You can find information on the following topics:

- activation of Mercedes me connect
- operating the vehicle
- nearest Mercedes-Benz service centre
- other products and services from Mercedes-Benz

Data is transmitted during the connection to the Mercedes-Benz Customer Centre (→ page 280).

Information on the breakdown assistance call
A breakdown assistance call to the Mercedes-Benz Customer Centre has been initiated via the overhead control panel (→ page 278) or the multimedia system (→ page 277).

- A qualified Mercedes-Benz technician carries out repairs on site and/or the vehicle will be towed to the nearest Mercedes-Benz service centre.

  You may be charged for these services.

Data is transferred during the connection to the Mercedes-Benz Customer Centre (→ page 280).

Information on Mercedes me connect accident management
The Mercedes me connect accident management is an extension of the Mercedes-Benz emergency call system (→ page 280).

An emergency call is made to the Mercedes-Benz emergency call centre after an accident:

- a voice connection is made to a contact person at the Mercedes-Benz emergency call centre.
- if necessary, the contact person at the Mercedes-Benz emergency call centre forwards the call to Mercedes me connect accident management.
- if necessary, the vehicle will be towed to a Mercedes-Benz service centre.

Mercedes me connect service message
If you have activated the maintenance management service, relevant vehicle data is transferred automatically to the Mercedes-Benz Customer Centre. You will then receive individual recommendations regarding the maintenance of your vehicle.

Regardless of whether you have consented to the maintenance management service, the multimedia system reminds you after a certain amount of time that a service is due. A prompt appears asking if you would like to make an appointment.

▶ **To arrange a service appointment:** select Call.
After your confirmation, the vehicle data is sent and a Mercedes-Benz Customer Centre employee deals with your appointment. The information is then sent to your desired service outlet.

This service outlet will then contact you within 24 hours.

ⓘ If you select Call later after the service message appears, the message is hidden and reappears after a certain period of time.

Consenting to the data transfer for Mercedes me connect

Requirement:
There is an active breakdown assistance or Info call on the multimedia system (→ page 277) or the overhead control panel (→ page 278).

If the breakdown and Mercedes me connect concierge services are not activated on Mercedes me, the Do you consent to the transfer of vehicle data and vehicle position data to the Mercedes-Benz Customer Centre in order to better deal with your query? message appears.

▶ Select Yes.
The relevant vehicle data is sent automatically.

More information on Mercedes me: http://www.mercedes.me

Transferred data during a service call
In certain countries you must confirm the data transfer.

Data transferred includes the following:

Overview of transferred data

Service call	Transferred data
MB Info call Breakdown assistance call	• current vehicle location • vehicle identification number • service code • selected data about the status of the vehicle

Mercedes-Benz emergency call system

Notes on the Mercedes-Benz emergency call system
The Mercedes-Benz emergency call system only functions in areas where mobile phone coverage is available from the relevant contract partner. Insufficient network coverage from the relevant contract partner may result in an emergency call not being transmitted.

The ignition must be switched on before an automatic emergency call can be made.

Overview of the Mercedes-Benz emergency call system
The Mercedes-Benz emergency call system can help to decisively reduce the time between an accident and the arrival of emergency services at the site of the accident. It helps locate an accident site in places that are difficult to access.

The emergency call can be made automatically (→ page 281) or manually (→ page 282). Only make emergency calls if you or others are in need of rescue. Do not make an emergency call

in the event of a breakdown or a similar situation.

Messages in the multimedia system display:
SOS READY: emergency call available

SOS NOT READY: the ignition is not on or there is a malfunction with the emergency call system.

During an active emergency call, SOS appears in the display.

You can find more information on the regional availability of the Mercedes-Benz emergency call system at: http://www.mercedes-benz.com/connect_ecall

ⓘ If an emergency call is unavailable, a message to this effect also appears in the multifunction display of the instrument cluster.

Automatic emergency call

Requirements:
- The ignition is switched on.
- The starter battery has been sufficiently charged.

If restraint systems such as airbags or seat belt tensioners have been activated after an accident, the Mercedes-Benz emergency call system may automatically initiate an emergency call.

The emergency call has been made:
- a voice connection is made to the Mercedes-Benz emergency call centre.
- a message with accident data is transmitted to the Mercedes-Benz emergency call centre.

  The Mercedes-Benz emergency call centre can transmit the vehicle position data to one of the public emergency services call centres.
- in certain situations additional data is transmitted to the Mercedes-Benz emergency call centre.

  This allows measures for rescue, recovery or towing to a Mercedes-Benz service centre to be initiated quickly.

If your vehicle is equipped with an SOS button in the overhead control panel, it flashes until the emergency call has been completed.

It is not possible to immediately end an automatic emergency call.

If the Mercedes-Benz emergency call system cannot connect to the Mercedes-Benz emergency call centre, the emergency call is automatically sent to the public emergency services call centre.

If no connection can be made to the public emergency services, a relevant message appears in the display.

▶ Dial the emergency call number 999 or 112 on your mobile phone.

If an emergency call has been initiated:
- remain in the vehicle, if the road and traffic conditions permit you to do so, until a voice connection is established with the emergency call centre operator.
- on the basis of the call, the operator decides whether it is necessary to deploy rescue teams and/or the police to the accident site.
- if no vehicle occupant answers, an ambulance is sent to the vehicle immediately.

Manual emergency call

▶ If the vehicle has an SOS button in the overhead control panel: press and hold the button for at least one second.

The emergency call has been made:

- a voice connection is made to the Mercedes-Benz emergency call centre.
- remain in the vehicle, if the road and traffic conditions permit you to do so, until a voice connection is established with the emergency call centre operator.
- on the basis of the call, the operator decides whether it is necessary to deploy rescue teams and/or the police to the accident site.
- a message with accident data is transmitted to the Mercedes-Benz emergency call centre.

  The Mercedes-Benz emergency call centre can transmit the vehicle position data to one of the public emergency services call centres.
- in certain situations additional data is transmitted to the Mercedes-Benz emergency call centre.

  This allows measures for rescue, recovery or towing to a Mercedes-Benz service centre to be initiated quickly.

If the Mercedes-Benz emergency call system cannot connect to the Mercedes-Benz emergency call centre, the emergency call is automatically sent to the public emergency services call centre.

If no connection can be made to the public emergency services, a relevant message appears in the display.

▶ Dial the emergency call number 999 or 112 on your mobile phone.

Ending an unintentional emergency call

▶ Select  in the telephone menu.

or

▶ Select  on the multifunction steering wheel.

Transmitted data with the Mercedes-Benz emergency call system

The following data is transmitted to the Mercedes-Benz emergency call centre:

- the vehicle's GPS position data
- the last GPS position data on the route (a few hundred metres before the incident)
- direction of travel
- vehicle identification number
- the vehicle drive type
- the estimated number of people in the vehicle
- whether Mercedes me connect is available or not
- whether the emergency call was initiated manually or automatically
- the time of the accident
- the language setting on the multimedia system

For accident clarification purposes, the following measures can be taken up to an hour after the emergency call has been initiated:

- the current vehicle position can be called up
- a voice connection to the vehicle occupants can be established

ⓘ For Russia: various functions, e.g. receiving traffic information, cannot be performed for up to two hours after sending an emergency call.

Starting/ending ERA-GLONASS test mode (Russia)

Requirements:

- The starter battery has sufficient charge.
- The ignition is switched on.
- The vehicle has been stationary for at least one minute.

▶ **To start the test mode:** press and hold the ☎ button on the multifunction steering wheel for at least five seconds.
The test mode is started and automatically ends after the language test has been performed.

▶ **To end the test mode manually:** switch off the ignition.
The test mode is ended.

Telephone module with Bluetooth® (SAP profile)

Fitting/removing the telephone module

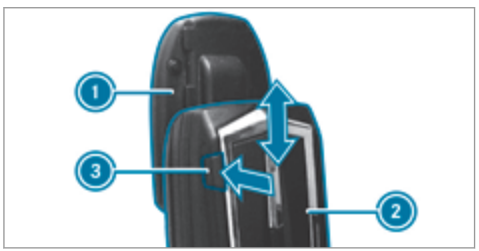

▶ **To fit:** Slide module ② in the centre console stowage compartment up into bracket ① until it audibly engages.

▶ **To remove:** press release knob ③.

▶ Slide module ② down and remove it.

Activating and connecting the telephone module

Requirement:
The module is fitted (→ page 283).

Multimedia system:

↪ Tel/🌐 ⏩ Telephone



▶ Press the ② button.

- As soon as indicator lamp (1) starts flashing yellow, release the button.
- Show the menu bar.
- Select Connect device.
  The device list is displayed.
- Select Connect MB SAP module.
- Select Start search.
  If the module has been found and the connection made, the MB SAP module connection successful message appears.

  A menu appears in which you can authorise a mobile phone for the module.
- Select Start search and follow the instructions of the multimedia system.

Inserting/removing a SIM card



- **To insert a SIM card:** insert SIM card (1) into the card slot with the contact surface facing down until it engages.
  A Bluetooth® connection with a mobile phone is no longer possible.
- **To remove a SIM card:** press and release SIM card (1).
  The SIM card is pushed out slightly and can then be removed.

Establishing a connection between the mobile phone and telephone module

Requirements:

- The telephone module is fitted (→ page 283) and activated (→ page 284).
- Terminate the active Bluetooth® connection of the mobile phone.
- Use the telephone module without the SIM card.

Depending on the type, settings must also be made on the mobile phone (see the manufacturer's operating instructions).

A list of mobile phones which are compatible with the telephone module with Bluetooth® (SAP profile) can be found on the Internet at:

http://www.mercedes-benz.com/connect.

Multimedia system:

→ Tel/🌐 ▸▸ Telephone

Searching for a mobile phone

- Show the menu bar.

- Select Connect device.
  The device list is displayed.
- Select Search for phones.
- Select SAP phone.
- Select Start search.
  Detected mobile phones are displayed.

Authorising and connecting a mobile phone

- Select the mobile phone under MB SAP module phones.
- Enter a random 16-digit PIN and confirm.
- Enter and confirm the same PIN on the mobile phone.
- Where necessary, enter the SIM card PIN into the multimedia system and confirm.

Observe the following notes:

- a mobile phone which has already been authorised is automatically connected.
- The multimedia system always searches for the last connected mobile phone. If this is not available, the previously connected mobile phone is searched for.
- only one mobile phone can be connected to the module at any one time.

Switching to the mobile phone on the telephone module

Requirement:
You can only switch to another authorised mobile phone if you are not currently making a call.

Multimedia system:
Tel/ ▸▸ Telephone ▸▸ Connect device ▸▸ MB SAP module phones

- Select the mobile phone.
  The mobile phone is searched for and connected if it is within Bluetooth® range and if Bluetooth® is activated.
- Confirm the module's connection request on the mobile phone (see the manufacturer's operating instructions).
- Where necessary, enter the SIM card PIN into the multimedia system and confirm.

The currently connected mobile phone is indicated by the ● dot in the Bluetooth® phone list.

A maximum of 15 mobile phones can be authorised on the module.

Using the telephone module in the data modem mode

Multimedia system:
Tel/ ▸▸ Telephone

- Connect the mobile phone to the module (→ page 283).
- Before connecting for the first time, enable the module for Internet access and select the network provider in the multimedia system (→ page 288).
  Use as a data modem is automatically activated.
- Activate/deactivate data roaming (→ page 286).

Storing the SIM card PIN in the telephone module

Multimedia system:

Tel/ ▸▸ Telephone ▸▸ Connect device

- Select MB SAP module phones.
  The Bluetooth® names of authorised mobile phones are displayed.
- Highlight a mobile phone.
- Select .
- Switch Store PIN on ☑.

Telephone module settings

Settings for using the telephone module with the mobile phone

Number	Function
00031	Activates caller ID transmission
00030	Deactivates caller ID transmission
00061	Activates data roaming
00060	Deactivates data roaming
00071	Activates network provider restriction
00070	Deactivates network provider restriction
00081	Activates text message transfer
00080	Deactivates text message transfer
00082	Sets situation-related dimming of the indicator lamp
00083	Does not change the brightness of the indicator lamp

Setting the ringtone for the telephone module

Multimedia system:

Tel/ ▸▸ Telephone ▸▸ Connect device ▸▸ MB SAP module phones

- Highlight the mobile phone.
- Select .
- Select Ringtones.
- Select a ringtone.
  The ringtone is played.

  The settings are applied once you exit the menu.

Transferring the phone book via the telephone module

The transfer takes place automatically once a connection has been established via Bluetooth®:

- If the mobile phone supports the PBAP (**P**hone **B**ook **A**ccess **P**rofile), the system gives priority to loading phone book entries from the phone memory.
- If there are no entries in the phone memory, the phone book entries from the SIM card are imported.

A list of compatible mobile phones can be found at:

http://www.mercedes-benz.com/connect

Notes on receiving text messages when using the telephone module

Observe the following notes when using the telephone module with Bluetooth® (SAP profile):

- it is only possible to access the text message memory of the SIM card.
- incoming text messages are saved on the SIM card.
- depending on the mobile phone, text messages are not directly visible and must first be selected (see the manufacturer's operating instructions).

A list of mobile phones which are compatible with the telephone module with Bluetooth® (SAP profile) can be found on the Internet at:

http://www.mercedes-benz.com/connect

Deleting call lists in the telephone module

Call lists are only available in the telephone module if the connected mobile phone supports the Bluetooth® PAP (**P**honebook **A**ccess **P**rofile) profile.

Deleting call lists

Number	Function
0002	Call lists in the telephone module are deleted

Terminating the connection between the mobile phone and the telephone module

There are two ways of disconnecting the mobile phone and module:

Automatic disconnection	Occurs after leaving the reception range
Manual disconnection	Occurs by terminating the Bluetooth® connection on the mobile phone (see the manufacturer's operating instructions)

Charging a mobile phone via the telephone module

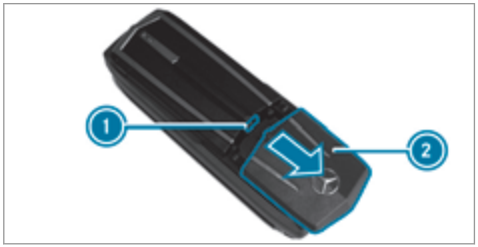

- Slide and remove module cover 2.
- Connect the mobile phone using a data cable with USB port 1.

Resetting the telephone module to factory settings



- ▶ Press and hold button (2) on the module.
- ▶ As soon as indicator lamp (1) lights up orange, release button (2).
- ▶ Press button (2) again.

Online and Internet functions

Internet connection

Setting up an Internet connection

Requirements:

- A mobile phone is connected to the multimedia system via Bluetooth® .

  To do so, the mobile phone must support one of the following Bluetooth® profiles:
  - DUN (Dial-Up Networking)
  - PAN (Personal Area Network)
- Set the access data of the mobile phone network provider for the connected mobile phone in the multimedia system. If you use incorrect access data, additional costs may be incurred.
- If you use the telephone module for Internet functions, you require a SIM card in the telephone module or a Bluetooth®-capable mobile phone.

You can obtain more detailed information at http://www.mercedes-benz.com/connect or from a Mercedes-Benz service centre.

Multimedia system:

→ Tel/🌐 ▸▸ Tel/🌐 ▸▸ Internet ▸▸ Settings ▸▸ Manage Internet settings ▸▸ Search for Internet devices ▸▸ Start search

- ▶ Select the mobile phone.
  If the mobile phone supports the Bluetooth® PAN profile, Internet access is set up. You can use the Internet functions. If the mobile phone does not support the named Bluetooth® profile, predefined or manual access data must be set.

Selecting the predefined access data of the mobile phone network provider

- ▶ Select Predefined settings.
  A list of countries appears.
- ▶ Select the country of your mobile phone network provider.
  The list of available providers appears.

- Select your mobile phone network provider.
  An overview of the provider settings appears.
- Select Confirm settings.

Manually setting the access data of the mobile phone network provider

- Select Manual settings.
  An overview of the provider settings appears.
- Set access data.
- Select Confirm settings.

ⓘ Set the access data in accordance with your data package. You can contact your mobile phone network provider to obtain the precise access data.

Cancelling Internet access permission for a mobile phone

Multimedia system:

→ Tel/🌐 ▸▸ Tel/🌐 ▸▸ Internet ▸▸ Settings ▸▸ Manage Internet settings

- Highlight a mobile phone.
- Select [☰].
- Select Delete configuration.
- Select Yes.

Displaying mobile phone details

Multimedia system:

→ Tel/🌐 ▸▸ Tel/🌐 ▸▸ Internet ▸▸ Settings ▸▸ Manage Internet settings

- Highlight a mobile phone.
- Select [☰].
- Select Details.

Establishing an Internet connection

Requirements:

- Your connection device is activated and operational.
- Your connection device receives a signal and has a data connection.

Multimedia system:

→ Tel/🌐 ▸▸ Tel/🌐 ▸▸ Internet

- For example, call up the Mercedes-Benz mobile website.
- **To show the menu:** press the [↩] button.
- **To end the connection:** select [⏻].

Mercedes-Benz Apps

Calling up Mercedes-Benz Apps

Requirements:

- Register to use Mercedes-Benz Apps.
- Confirm the general terms and conditions.

Multimedia system:

→ Tel/🌐 ▸▸ Tel/🌐 ▸▸ Internet ▸▸ Mercedes-Benz Apps

- Select the App.

Further Mercedes-Benz Apps and information can be obtained at: http://apps.mercedes-benz.com/apps/

ⓘ The available features are country-dependent.
Licence fees may be applicable.

Web browser

Calling up a website

Multimedia system:

→ Tel/🌐 ▸▸ Tel/🌐 ▸▸ Internet ▸▸ www

- Enter a web address.
- **To finish entry and call up a website:** select ok .

ⓘ Websites cannot be shown while the vehicle is in motion.

Overview of the web browser



1. To close the browser
2. Web page, back
3. Web page, forwards
4. To refresh/stop
5. URL entry
6. Favourites
7. To disconnect
8. Options

Calling up the web browser options

Multimedia system:

→ Tel/🌐 ▸▸ Tel/🌐 ▸▸ Internet ▸▸ www

- Call up the website.
- **To show the menu:** press the ⮌ button.
- **To call up the options menu:** select ☰.

The following functions are available:

- Add to bookmarks
- Current URL
- Zoom
- Jump from link to link
- Directional scrolling
- Settings

- Select an option.

Calling up the web browser settings

Multimedia system:

→ Tel/🌐 ▸▸ Tel/🌐 ▸▸ Internet ▸▸ www

- Call up the website.
- **To show the menu:** press the ⮌ button.
- **To call up the options menu:** select ☰.
- Select Settings.

The following functions are available:

- Download images automatically
- Block popups
- Enable Javascript
- Enable cookies
- Show link target
- Character size
- Character code

- Select the setting.

Deleting Internet history
Multimedia system:
→ Tel/🌐 ▸▸ Tel/🌐 ▸▸ Internet ▸▸ Settings ▸▸ Delete private data

- Select the setting.

or

- Select Delete all data on exiting.

Setting Internet favourites
Multimedia system:
→ Tel/🌐 ▸▸ Tel/🌐 ▸▸ Internet

Creating favourites

- Select www.
- Call up the website.
- **To show the menu:** press the ⮌ button.
- **To call up the options menu:** select ☰.
- Select Add to bookmarks.

Selecting favourites

- Select My Internet bookmarks.
- Select bookmarks.

Editing favourites

- Select Edit.
- entering a web address

Deleting favourites

- Select Delete.
- Select Yes.

Closing the browser
Multimedia system:
→ Tel/🌐 ▸▸ Tel/🌐 ▸▸ Internet ▸▸ www

- **To show the menu:** press the ⮌ button.
- Select ⮌.

Media

Audio mode

Information on audio mode

⚠ **WARNING** Risk of distraction when handling data storage medium

If you handle a data storage medium while driving, your attention is diverted from the traffic conditions. This could also cause you to lose control of the vehicle.

- Only handle a data storage medium when the vehicle is stationary.

Permissible file systems:

- FAT32
- exFAT
- NTFS

Permissible data storage medium:

- SD memory card
- USB storage device

ⓘ The multimedia system supports up to a total of 15,000 files.

Supported formats:

- MP3
- WMA
- AAC formats

ⓘ Due to the large variety of available music files regarding encoders, sampling rates and bit rates, playback cannot always be guaranteed.

ⓘ Due to the wide range of USB devices available on the market, playback cannot be guaranteed for all brands of USB devices.

ⓘ Copy-protected music files or DRM encrypted files cannot be played back.

ⓘ MP3 players must support Media Transfer Protocol (MTP).

Notes on copyright

Audio files that you create or reproduce yourself for playback are generally subject to copyright protection. In many countries, reproductions, even for private use, are not permitted without the prior consent of the copyright holder. Make sure that you know about the applicable copyright regulations and that you comply with these.

Activating media mode

Multimedia system:

→ Media ▸▸ Media

The following functions are available:

- Memory card
- Media Interface 1
- Media Interface 2
- Bluetooth audio

▶ Select the media source.
Playable music files are played back.

Inserting/removing an SD memory card

⚠ **DANGER** Risk of fatal injury from swallowing SD cards

SD cards are small parts.

They could be swallowed and lead to choking.

▶ Keep SD cards out of the reach of children.

▶ Seek medical attention immediately if an SD card has been swallowed.

! **NOTE** Damage caused by high temperatures

High temperatures can damage the SD memory card.

▶ Remove the SD memory card after use and take it out of the vehicle.

Multimedia system:

→ Media ▸▸ Media ▸▸ Memory card

Inserting

The multimedia connection unit is located in the stowage compartment under the armrest.

▶ Insert the SD memory card into the SD card slot until it engages. The side with the contacts must face downwards.
Playable music files are played back.

Removing

- Press the SD memory card.
- Eject the SD memory card.

Overview of the audio mode



1. Active data storage medium
2. Play mode
3. Track
4. Track number and number of tracks in the track list
5. Artist and album
6. Time with elapsed time/time remaining bar
7. Cover

Connecting USB devices

NOTE Damage caused by high temperatures

High temperatures can damage USB devices.

- Remove the USB device after use and take it out of the vehicle.

The multimedia connection unit is found in the stowage compartment under the armrest and has two USB ports. Depending on the vehicle's equipment, additional USB ports may be found in the stowage compartment of the centre console or rear folding compartment.

- Connect the USB device to the USB port. Playable music files are played back only if the corresponding media display is activated.

Selecting a track

Multimedia system:

→ Media ⏩ Media

- Select the media source. Playable music files are played back.

Selecting a track using the current track list

- **To display the current track list:** press the touchpad and controller.
- Select a track.

Selecting a track by skipping to a track

- **To skip backwards or forwards to a track:** navigate to the left or right.

Selecting playback options

Multimedia system:

→ Media ⏩ Options

Play mode

- Select Play mode.
- Select Normal track sequence. The current track list is played in the order it appears on the data medium.
- Select Random track list. The current track list is played in random order.
- Select Random media. All tracks on the data medium are played in random order.

Skip to time

- Select Skip to time.
  A menu appears.
- Set the time.

Showing track information

- Switch Show track information on ☑ or off ☐ .

Pause and playback function

Multimedia system:

→ Media

Pausing playback

- Navigate downwards.
- Select ⏸.

Continuing playback

- Select ▶.

Media search

Starting the media search

Multimedia system:

→ Media » Search

Depending on the connected media sources and files, the following categories are listed:

- Current track list
- Folder
- Keyword search
- Playlists
- Artists
- Albums
- Tracks
- Genres
- Year
- Composers
- iTunes U (Apple® devices)
- Genius mixes (Apple® devices)
- Podcasts (Apple® devices)
- Audiobooks (Apple® devices)

- Select a category.

Media Interface

Information about the Media Interface

Media Interface is a universal interface for the connection of mobile audio equipment. The multimedia system has two USB ports. The USB ports are located in the stowage compartment under the armrest.

Supported devices

The Media Interface allows you to connect the following data storage media:

- iPod®
- iPhone®
- MP3 player
- USB devices

For details and a list of supported devices, visit our website at http://www.mercedes-benz.com/connect. Follow the instructions in the "Media Interface" section.

Switching on Media Interface
Multimedia system:
→ Media ▸▸ Media ▸▸ Media Interface 1

- Connect the data storage medium with the USB port (→ page 293).
  Playable music files are played back.

Overview of Media Interface



1. Active data storage medium
2. Play mode
3. Track
4. Track number and number of tracks in the track list
5. Artist and album
6. Time with elapsed time/time remaining bar
7. Cover

Bluetooth® audio

Information about Bluetooth® audio
Before using your Bluetooth® audio equipment with the multimedia system for the first time, you will need to authorise it (→ page 295).

Bluetooth® Audio overview



1. Active data storage medium
2. Play mode
3. Track display
4. Connected Bluetooth® audio equipment
5. Time with elapsed time/time remaining bar
6. Artist and album

Searching for and authorising Bluetooth® audio equipment

Requirements:
Bluetooth® is activated on the multimedia system (→ page 265).

Check your Bluetooth® audio equipment for the following (see the manufacturer's operating instructions):

- the Bluetooth® audio equipment must support the A2DP and AVRCP Bluetooth® audio profiles.
- the Bluetooth® function must be activated.
- the Bluetooth® audio equipment must be "visible" for other devices.
- the Bluetooth® audio equipment must support Bluetooth® version 2.1 for connection via Secure Simple Pairing.

Multimedia system:
→ Media ▸▸ Media ▸▸ Bluetooth audio ▸▸ Options ▸▸ Bluetooth audio devices ▸▸ Search for audio devices

- Select Start search.
  The multimedia system searches for Bluetooth® audio equipment within range and adds them to the Bluetooth® device list.

Option 1: Secure Simple Pairing

- Select Bluetooth® audio equipment.
  Authorisation starts.
  A code is displayed on the multimedia system and on the mobile phone.
- Confirm on both devices if the codes are identical.

Option 2: entering the passkey

- Select Bluetooth® audio equipment.
  The input menu for the passkey is displayed.
- **Multimedia system:** choose a one to sixteen-digit number combination as a passkey.
- Select OK once all the numbers have been entered.
- **Mobile phone:** enter the same passkey and confirm your entry.
  After successful authorisation, the Bluetooth® audio equipment is connected and starts playing.

Establishing a connection from the Bluetooth® audio equipment

The Bluetooth® device name of the multimedia system is MB BLUETOOTH.

- Select Connect via audio device.
- Start the authorisation on your Bluetooth® audio equipment (see the manufacturer's operating instructions).
  After successful authorisation, the Bluetooth® audio equipment is connected and starts playing.

With some Bluetooth® audio equipment, playback must be initially started on the device itself so that the multimedia system can play the audio files.

ⓘ Device-specific information on authorising and connecting Bluetooth®-capable mobile phones can be obtained at http://www.mercedes-benz.com/connect or from a Mercedes-Benz service centre.

Activating Bluetooth® audio

Multimedia system:
→ Media ▸▸ Media

- Select Bluetooth audio.
  The multimedia system activates the connected Bluetooth® audio equipment.

Adjusting the volume on the Bluetooth® audio equipment

Multimedia system:
→ Media ▸▸ Media ▸▸ Bluetooth audio ▸▸ Options ▸▸ Volume

- Select Standard or Boost.

ⓘ On some Bluetooth® audio equipment, the volume can be adjusted on the device (see the manufacturer's Owner's Manual).

Displaying Bluetooth® audio equipment details

Multimedia system:

→ Media ▸▸ Media ▸▸ Bluetooth audio ▸▸ Options ▸▸ Bluetooth audio devices

- Highlight Bluetooth® audio equipment and navigate to the right.
- Select Details.

De-authorising (de-registering) Bluetooth® audio equipment

Multimedia system:

→ Media ▸▸ Media ▸▸ Bluetooth audio ▸▸ Options ▸▸ Bluetooth audio devices

- Highlight Bluetooth® audio equipment and navigate to the right.
- Select De-authorise.
- Select Yes.
  The device will be deleted from the Bluetooth® device list.

Radio

Switching on the radio

Multimedia system:

→ Radio

- Alternatively: press the RADIO button.
  The radio display appears. You will hear the last station played on the last frequency band selected.

Radio overview



1. Preset
2. Display of radio station selected
3. Main display field with available stations and relevant information
4. Artist and track display

Setting the frequency band

Multimedia system:

→ Radio ▸▸ Waveband

- Select a frequency band.

Selecting a radio station

Multimedia system:

→ Radio

Using the main display field

- **To select a station:** navigate to the left or right.

Using the current station list

- Press the touchpad or the controller.
  The station list appears with the stations currently available.
- Select a channel.

Using direct entry

- Select Options.
- Select Direct entry.
- Select a frequency band.
- Enter the frequency of the desired station in the entry field.

or

- Select Station preset.
- Enter the station preset of the desired station.
- Select ok .

Using the preset position

- Select Preset.
- Select Enter preset.
- Enter the station preset of the desired station.
- Select ok .

Using the search function

- Select .
- Enter a search term.
- Select ok .
  Results are displayed.
- Select a channel.

Calling up the radio station list

Multimedia system:

→ Radio

- Press the touchpad or the controller.
  The station list appears.

ⓘ Each frequency range has its own station list with the stations that can currently be received.

Radio station list with EPG (FM/DAB radio mode)

- Select Options.
- Select Current station list with EPG.
- Select a channel.
- To switch between Current programme and Programme preview: navigate to the left or the right.

Sorting the radio station list

Multimedia system:

→ Radio ⏩ Options

- Select Sort station list.
- Select sorting options.

Storing radio stations

Multimedia system:

→ Radio

- Select Preset.
- Select Save current station.
- Select a location for storing the station.

or

- In radio mode, press and hold the touchpad or controller until the preset list appears.
- Select a location for storing the station.

Editing radio station presets

Multimedia system:

→ Radio ⏩ Preset ⏩ Edit station preset

Delete station

- ▶ Highlight the preset entry and navigate to the right.
- ▶ Select Delete highlighted station/channel.
- ▶ Select Yes.

Moving stations

- ▶ Highlight the preset entry and navigate to the right.
- ▶ Select Move highlighted station/channel.
- ▶ Select a location for storing the station.

Activating/deactivating the presets view

Multimedia system:

→ Radio ⏩ Preset

- ▶ Select Station presets view: on.
  The radio station preset appears.
- ▶ **To switch between stored stations:** navigate to the left or right.

or

- ▶ Select Station presets view: off.
  The frequency band of the station currently being played appears.

Radio station tracking

Multimedia system:

→ Radio ⏩ Options ⏩ Station tracking

The following functions are available:

- Automatic: the multimedia system switches to alternative frequencies across all frequency bands.
- Digital: switches to alternative frequencies in the DAB frequency band.
- Analogue: switches to alternative frequencies in the FM frequency band.
- Fix frequency: an alternative frequency is not set. The multimedia system maintains the set frequency when the reception is poor.

- ▶ Select an option.

ⓘ The settings are usually stored and taken into account when calling up a preset again.

Frequency fix function (FM radio mode)

Multimedia system:

→ Radio ⏩ Options

- ▶ Select Fix frequency.
  The multimedia system maintains the set frequency when the reception is poor.

Tagging music tracks

Multimedia system:

→ Radio ⏩ Options

If radio stations provide the relevant information, this function allows you to transfer information on the music track currently being played to an Apple® device. You can then purchase the audio file from the iTunes Store®.

- ▶ Select Tag this track.
  The track information is saved.

Displaying the artist and track

Multimedia system:

→ Radio ▸▸ Options

- ▶ Select Display artist and track.
- ▶ Switch the function on ☑.

Switching traffic announcements on/off

Multimedia system:

→ Radio ▸▸ Options ▸▸ TA

- ▶ Activate ☑ or deactivate ☐ the function.

or

- ▶ Press and hold the button on the multifunction steering wheel until the TA display in the status bar lights up or goes out.

Displaying station information

Requirement

- Radio stations provide the relevant information.

Multimedia system:

→ Radio



- ▶ Select Information.
  Additional information is displayed.

Returning to the main display

- ▶ Select Information.

Sound

Tone settings

Information about the sound system
The sound system has a total output of 100 watts and is equipped with seven speakers. It is available for all functions in the radio and media modes.

Calling up the sound menu

Multimedia system:

→ Media ▸▸ ♪

The following functions are available:

- Equaliser
- Balance/Fader

- ▶ Select the sound menu.

Adjusting treble, mid and bass

Multimedia system:

→ Media ▸▸ ♪ ▸▸ Equaliser

- ▶ Select the rotary menu.
- ▶ Change the settings.
- ▶ **To exit the menu:** press the ⮌ button.

Adjusting the balance/fader

Multimedia system:

→ Media ▸▸ ♪ ▸▸ Balance/Fader

- ▶ Adjust the balance and fader.
- ▶ **To exit the menu:** press the ⮌ button.

Burmester® surround sound system

Information about the Burmester® surround sound system

The Burmester® surround sound system has a total output of 590 watts and is equipped with 13 speakers. It is available for all functions in the radio and media modes.

Calling up the sound menu in the Burmester® surround sound system

Multimedia system:

Media ▸▸ ♪

The following functions are available:

- Equaliser
- Balance/Fader
- Surround sound

▶ Select the sound menu.

Adjusting the treble, mid and bass settings on the Burmester® surround sound system

Multimedia system:

Media ▸▸ ♪ ▸▸ Equaliser

▶ Select the rotary menu.

▶ Change the settings.

▶ **To exit the menu:** press the ⮌ button.

Adjusting the balance/fader in the Burmester® surround sound system

Multimedia system:

Media ▸▸ ♪ ▸▸ Balance/Fader

▶ Adjust the balance and fader.

▶ **To exit the menu:** press the ⮌ button.

Switching surround sound on/off in the Burmester® surround sound system

Multimedia system:

Media ▸▸ ♪ ▸▸ Surround sound

▶ Switch the function on/off in the left rotary menu.

▶ **To exit the menu:** press the ⮌ button.

Adjusting the sound optimisation in the Burmester® surround sound system

Multimedia system:

Media ▸▸ ♪ ▸▸ Surround sound

▶ Adjust the focus in the right rotary menu.

▶ **To exit the menu:** press the ⮌ button.

ASSYST PLUS service interval display

Function of the ASSYST PLUS service interval display

The ASSYST PLUS service interval display in the instrument display provides information on the remaining time or distance before the next service due date.

You can hide this service message using the back button on the left-hand side of the steering wheel.

You can obtain further information concerning the servicing of your vehicle from a qualified specialist workshop, e.g. a Mercedes-Benz Service Centre.

Displaying the service due date

On-board computer:

Service ▸▸ ASSYST PLUS

The next service due date is displayed.

▶ **To exit the display:** press the back button on the left-hand side of the steering wheel.

Make sure to observe the following further related subject:

- Operating the on-board computer (→ page 245).

Carrying out service work at regular intervals

! NOTE Premature wear through failure to observe service due dates

Service work which is not carried out at the right time or incompletely can lead to increased wear and damage to the vehicle.

▶ Always observe the prescribed service intervals.

▶ Always have the prescribed service work carried out at a qualified specialist workshop.

Special service requirements

The prescribed service interval is based on normal operation of the vehicle. Service work will need to be performed more often if the vehicle is operated under arduous conditions or increased loads, for example:

- regular city driving with frequent intermediate stops.
- if the vehicle is primarily used to travel short distances.
- for frequent operation in mountainous terrain or on poor road surfaces.
- if the engine is often left idling for long periods.
- in particularly dusty conditions and/or if air-recirculation mode is frequently used.

In these or similar operating conditions, have, for example, the interior air filter, engine air filter, engine oil and oil filter changed more frequently. The tyres must be checked more frequently if the vehicle is operated under increased loads. Further information can be obtained at a qualified specialist workshop.

Battery disconnection periods

The ASSYST PLUS service interval display can only calculate the service due date when the battery is connected.

- Note down the service due date displayed in the instrument display before disconnecting the battery (→ page 302).

Engine compartment

Active bonnet (pedestrian protection)

Operation of the active bonnet (pedestrian protection)

In certain accident situations, the risk of injury to pedestrians can be reduced by the actuation of the active bonnet. The rear area of the engine bonnet is raised by approximately 85 mm.

For the drive to the workshop, reset the triggered active bonnet yourself. If the active bonnet has been triggered, pedestrian protection may be limited.

A qualified specialist workshop must re-instate the full functionality of the active bonnet.

The active bonnet is not available in all countries.

Resetting the active bonnet

⚠ **WARNING** Danger of burns from hot component parts in the engine compartment

Certain component parts in the engine compartment may be very hot, e.g. the engine, the radiator and parts of the exhaust system.

- Let the engine cool down and only touch the component parts described below:

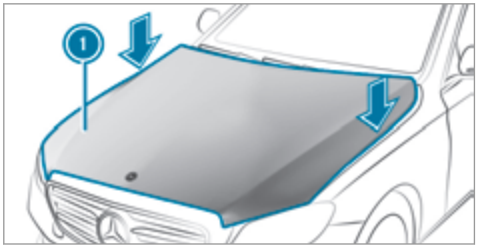

- With your hand flat, push down active bonnet (1) in the area around the hinges on both sides (arrows).
  The engine bonnet must engage in position.
- If the active bonnet can be raised slightly at the rear in the area of the hinges, repeat the step until it engages correctly in position.

Opening/closing the bonnet

WARNING Risk of accident due to driving with the engine bonnet unlocked

An unlocked engine bonnet may open up when the vehicle is in motion and block your view.

- Never unlock the engine bonnet when driving.
- Before every trip, ensure that the engine bonnet is locked.

WARNING Risk of accident and injury when opening and closing the engine bonnet

When opening or closing the engine bonnet, it may suddenly drop into the end position.

There is a risk of injury for anyone in the engine bonnet's range of movement.

- Only open or close the engine bonnet when there are no persons in the engine bonnet's range of movement.

WARNING Danger of burns when opening the bonnet

If you open the engine bonnet when the engine has overheated or during a fire in the engine compartment, you could come into contact with hot gases or other escaping operating fluids.

- Before opening the bonnet, allow the engine to cool down.
- In the event of a fire in the engine compartment, keep the engine bonnet closed and call the fire service.

WARNING Risk of injury due to moving parts

Certain components in the engine compartment may continue to move or suddenly move again even after the ignition has been switched off, e.g. the cooler fan.

Make sure of the following before performing tasks in the engine compartment:

- Switch the ignition off.
- Never touch the danger zone surrounding moving component parts, e.g. the rotation area of the fan.
- Remove jewellery and watches.
- Keep items of clothing and hair away from moving parts.

WARNING Risk of injury from touching component parts under voltage

The ignition system and the fuel injection system work under high voltage. If you touch component parts which are under voltage, you could receive an electric shock.

- Never touch components of the ignition system or the fuel injection system when the ignition is switched on.

WARNING Danger of burns from hot component parts in the engine compartment

Certain component parts in the engine compartment may be very hot, e.g. the engine,

the radiator and parts of the exhaust system.

- Let the engine cool down and only touch the component parts described below:

WARNING Risk of injury from using the windscreen wipers while the engine bonnet is open

When the engine bonnet is open, and the windscreen wipers are set in motion, you can be trapped by the wiper linkage.

- Always switch off the windscreen wipers and ignition before opening the engine bonnet.

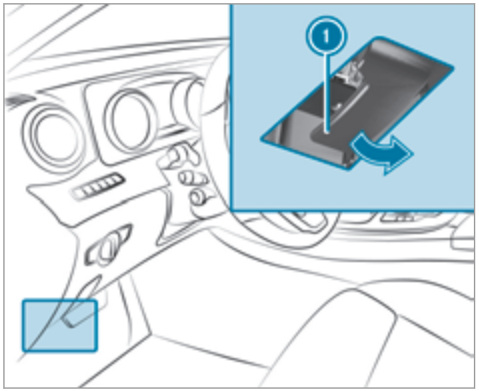

- **To open:** pull lever (1) to release the bonnet.

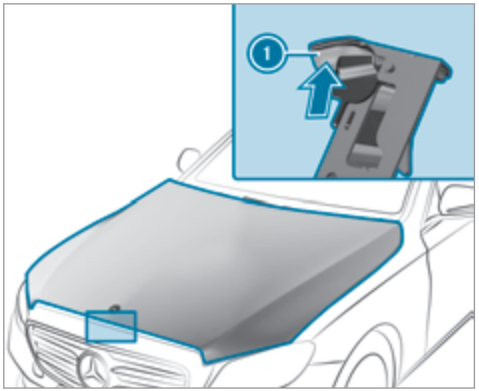

- Push bonnet catch (1) upwards and lift the bonnet by approximately 40 cm.
- **To close:** lower the bonnet and let it fall from a height of approximately 20 cm.
- If the bonnet can still be lifted slightly, open the bonnet again and close it with a little more force until it engages correctly.

Engine oil

Checking the engine oil level using the oil dipstick

WARNING Danger of burns from hot component parts in the engine compartment

Certain component parts in the engine compartment may be very hot, e.g. the engine, the radiator and parts of the exhaust system.

- Let the engine cool down and only touch the component parts described below:

Depending on the engine, the oil dipstick may be installed in the engine compartment in different locations.

Waiting time before checking the oil level:

- Engine at normal operating temperature: five minutes.
- Engine not at normal operating temperature (e.g. the engine was only started briefly): 30 minutes.

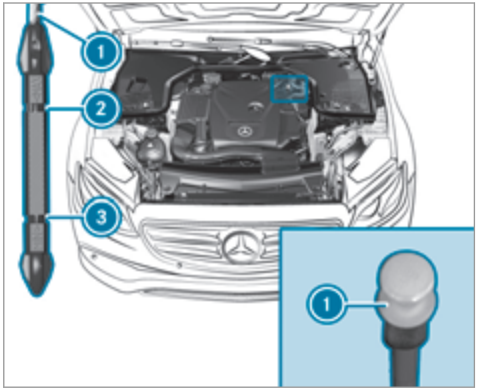

- Park the vehicle on a flat surface.
- Remove oil dipstick (1) and wipe off.
- Slowly slide oil dipstick (1) into the guide tube to the stop, and take it out again after approximately three seconds.
  - Oil level is correct: oil level is between (2) and (3).
  - Oil level too low: oil level is at (3) or below.
  - Oil level too high: oil level is above (2).
- If the oil level is too low, top up with 1 l of engine oil.
- If the oil level is too high, drain off excess engine oil. Consult a qualified specialist workshop.

Checking the engine oil level using the on-board computer (E 220 d)

The engine oil level is determined during driving. The oil level display is only available after a driving time of up to 30 minutes and if the ignition is switched on, depending on the driving profile.

It is not possible to correctly measure the oil level if:

- The vehicle is not level during the measuring process.

- The bonnet was previously opened.

The engine must be restarted and the engine oil level will be determined again during driving.

On-board computer:

Service ▸▸ Engine oil level:

You will see one of the following display messages in the multifunction display:

- Engine oil level Measuring now: measurement of the oil level is not yet possible. Repeat the request after a maximum of 30 minutes' driving.
- Engine oil level OK and the bar display for indicating the oil level in the multifunction display is green and is between "min" and "max": the oil level is correct.
- Engine oil level Add 1,0 l and the bar display for indicating the oil level in the multifunction display is orange and is below "min": top up with 1 l of engine oil.
- Reduce engine oil level and the bar display for indicating the oil level in the multifunction display is orange and is above "max": drain off the excess engine oil. Consult a qualified specialist workshop.
- For engine oil level turn on ignition: switch on the ignition to check the engine oil level.
- Engine oil level System inoperative: sensor faulty or not connected. Consult a qualified specialist workshop.
- Engine oil level System currently unavail.: close the engine bonnet.

Topping up engine oil

⚠ **WARNING** Danger of burns from hot component parts in the engine compartment

Certain component parts in the engine compartment may be very hot, e.g. the engine, the radiator and parts of the exhaust system.

- Let the engine cool down and only touch the component parts described below:

⚠ **WARNING** Risk of fire and injury from engine oil

If engine oil comes into contact with hot component parts in the engine compartment, it may ignite.

- Make sure that no engine oil is spilled next to the filler opening.
- Allow the engine to cool off and thoroughly clean the engine oil from component parts before starting the vehicle.

! **NOTE** Engine damage caused by an incorrect oil filter, incorrect oil or additives

- Do not use engine oils or oil filters which do not correspond to the specifications explicitly prescribed for the service intervals.
- Do not alter the engine oil or oil filter in order to achieve longer change intervals than prescribed.
- Do not use additives.

▶ Follow the instructions in the service interval display regarding the oil change.

! NOTE Damage caused by topping up too much engine oil

Topping up too much engine oil can cause damage to the engine or the catalytic converter.

▶ Have excess engine oil siphoned off at a qualified specialist workshop.

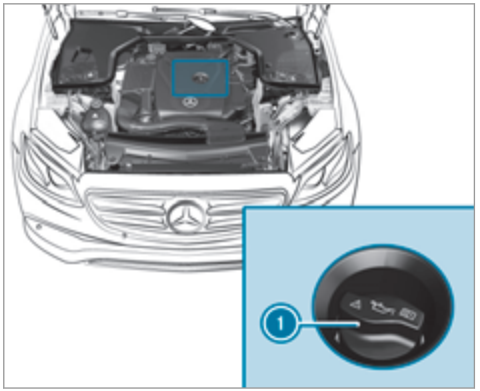

▶ Turn cap (1) anti-clockwise and remove it.
▶ Top up the engine oil.
▶ Replace cap (1) and turn it clockwise as far as it will go.
▶ Check the oil level again (→ page 306).

Checking the coolant level

⚠ WARNING Danger of burns from hot component parts in the engine compartment

Certain component parts in the engine compartment may be very hot, e.g. the engine, the radiator and parts of the exhaust system.

▶ Let the engine cool down and only touch the component parts described below:

⚠ WARNING Danger of burns from hot coolant

The engine cooling system is pressurised, particularly when the engine is warm. If you open the cap, you could be scalded by hot coolant spraying out.

▶ Let the motor cool down before opening the cap.
▶ When opening the cap, wear gloves and protective eyewear.

▶ Slowly turn the cap half a turn to allow pressure to escape.

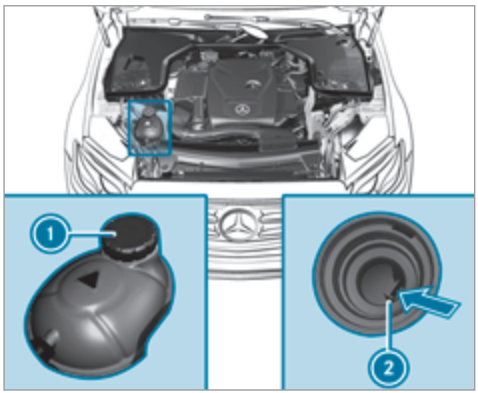

▶ Park the vehicle on a flat surface.

▶ Check the coolant temperature display in the instrument cluster.
The coolant temperature must be below 70 °C.

▶ Slowly turn cap (1) anti-clockwise to relieve overpressure.

▶ Continue turning cap (1) anti-clockwise and remove it.

The coolant level is correct:

- If the engine is cold, up to marker bar (2)
- If the engine is warm, up to 1.5 cm over marker bar (2)

▶ If necessary, top up with coolant that has been tested and approved by Mercedes-Benz.

- Further information on coolant (→ page 370)

Topping up the windscreen washer system

WARNING Danger of burns from hot component parts in the engine compartment

Certain component parts in the engine compartment may be very hot, e.g. the engine, the radiator and parts of the exhaust system.

▶ Let the engine cool down and only touch the component parts described below:

WARNING Danger of burns when opening the engine bonnet

If you open the engine bonnet when the engine has overheated or during a fire in the engine compartment, you could come into contact with hot gases or other escaping operating fluids.

▶ Before opening the engine bonnet, allow the engine to cool down.

▶ In the event of a fire in the engine compartment, keep the engine bonnet closed and call the fire service.

WARNING - Risk of fire and injury due to windscreen washer concentrate

Windscreen washer concentrate is highly flammable. It could ignite if it comes into contact with hot engine component parts or the exhaust system.

▶ Make sure that no windscreen washer concentrate spills out next to the filler opening.

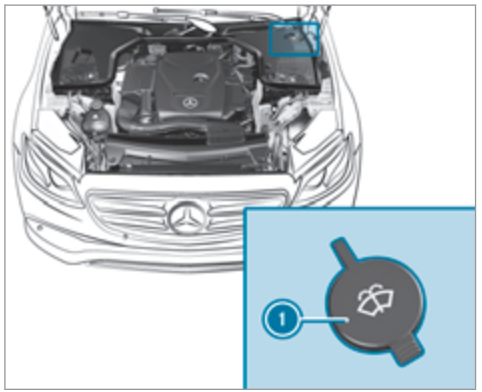

▶ Remove cap (1) by the tab.
▶ Top up the washer fluid.

Cleaning and care

Information on washing the vehicle in a car wash

⚠ WARNING Risk of an accident due to reduced braking power after washing the vehicle

Braking efficiency is reduced after washing the vehicle.

▶ After the vehicle has been washed, brake carefully while paying attention to the traffic conditions until braking power has been fully restored.

To avoid damage to your vehicle when using a car wash, ensure the following beforehand:

- Distance Pilot DISTRONIC and the HOLD function are switched off.
- The 360° Camera or the reversing camera is switched off.
- The side windows and sliding sunroof are completely closed.
- The blower for the ventilation/heating is switched off.
- The windscreen wiper switch is in position **0**.
- In car washes with a towing mechanism: neutral [N] is engaged.
- The key is at a distance of at least 3 m away from the vehicle, otherwise the tailgate could open unintentionally.

ⓘ If, after the car wash, you remove the wax from the windscreen and wiper rubber, this will prevent smearing and reduce wiper noise.

Information on using a high-pressure cleaner

⚠ WARNING Risk of an accident when using high-pressure cleaners with circular jet nozzles

The water jet of a circular jet nozzle (dirt grinder) can cause externally invisible damage to the tyres or chassis parts.

Components damaged in this way may unexpectedly fail.

- ▶ Do not use high-pressure cleaners with circular jet nozzles to clean the vehicle.
- ▶ Have damaged tyres or chassis parts replaced immediately.

To avoid damage to your vehicle, observe the following when using a high-pressure cleaner:

- Keep the key at least 3 m away from the vehicle. Otherwise the tailgate could open unintentionally.
- Maintain a distance of at least 30 cm to the vehicle.
- **Vehicles with decorative foil:** parts of your vehicle are covered with a decorative foil. Maintain a distance of at least 70 cm between the foil-covered parts of the vehicle and the nozzle of the high pressure cleaner. Move the high-pressure cleaner nozzle around whilst cleaning.
- Observe the information on the correct distance in the equipment manufacturer's operating instructions.
- Do not point the nozzle of the high-pressure cleaner directly at sensitive parts such as tyres, slits, electrical component parts, batteries, light sources and ventilation slots.

Washing the vehicle by hand

Observe the legal requirements, e.g. in some countries, washing by hand is only allowed at specially equipped washing bays.

- ▶ Use a mild cleaning agent, such as a car shampoo.
- ▶ Wash the vehicle with lukewarm water using a soft car sponge. When doing so, do not expose the vehicle to direct sunlight.
- ▶ Carefully hose the vehicle off with water and dry using a chamois. Take care not to point the water jet directly towards the air inlet grille.

Notes on paintwork/matt finish paintwork care

Observe the following information:

	Information on cleaning and care	Avoiding damage to the paintwork
Paint	• Insect remains: soak with insect remover and rinse off the treated areas afterwards. • Bird droppings: soak with water and rinse off afterwards. • Coolant, brake fluid, tree resins, oils, fuel and greases: gently rub with a cloth soaked in petroleum ether or lighter fluid. • Tar stains: use tar remover. • Wax: use silicone remover.	• Do not apply stickers, films etc. • Remove dirt immediately, where possible.
Matt finish	• The vehicle should preferably be washed by hand using a soft sponge, car shampoo and plenty of water. • Only use care products recommended by Mercedes-Benz.	• Do not polish the vehicle and light-alloy wheels. • Do not have your vehicle cleaned at an automatic car wash too frequently and do not use wash programs which finish with a hot wax vehicle treatment. • Do not use paint cleaner, buffing or polishing products such as a gloss preserver, e.g. wax. • Always have paintwork repairs carried out at a qualified specialist workshop.

Notes on care of vehicle parts

⚠ WARNING Risk of entrapment if the windscreen wipers are switched on while the windscreen is being cleaned

If the windscreen wipers are set in motion while you are cleaning the windscreen or wiper blades, you can be trapped by the wiper arm.

- Always switch off the windscreen wipers and the ignition before cleaning the windscreen or wiper blades.

⚠ WARNING Risk of burns from tailpipes and tailpipe trim

The tailpipe and tailpipe trim can become very hot. If you come into contact with these parts of the vehicle, you could burn yourself.

- Always be particularly careful around the tailpipe and the tailpipe trim.
- Allow the vehicle parts to cool down before you touch them.

Observe the following information:

	Information on cleaning and care	Avoiding vehicle damage
Wheels/rims	Use water and acid-free wheel cleaners.	• Do not use acidic wheel cleaners to remove brake dust. This could damage wheel bolts and brake components. • To avoid corrosion of the brake discs and brake linings, drive the vehicle for a few minutes after cleaning before parking it. The brake discs and brake linings warm up and dried out.
Windows	Clean the windows on the inside and outside using a damp cloth and cleaning products recommended by Mercedes-Benz.	Do not use dry cloths, abrasive products or cleaning agents containing solvents to clean the inside of the windows.

	Information on cleaning and care	Avoiding vehicle damage
Wiper blades	Fold out the wiper blades and clean them using a damp cloth.	Do not clean the wiper blades too often.
Exterior lighting	Clean the lens with a wet sponge and mild detergent, e.g. car shampoo.	Only use cleaning agents or cleaning cloths that are suitable for plastic lenses.
AIRPANEL	If the vehicle is very dusty or there are salt deposits in the AIRPANEL mechanics, the adjustment range of the shutters in the radiator trim may be restricted. • Switch on the ignition, and the shutters open automatically after approximately 120 seconds. • Clean the bearing points of the shutters with a high-pressure water jet.	When using a high-pressure water jet, maintain a minimum distance of 30 cm.
Sensors	Clean the sensors in the front and rear bumpers and in the radiator grille with a soft cloth and car shampoo.	When using a high-pressure water jet, maintain a minimum distance of 30 cm.
Reversing camera and **360° Camera**	• Open the camera cover with the multimedia system(→ page 216) . • Use clear water and a soft cloth to clean the camera lens.	Do not use a high-pressure water jet.

	Information on cleaning and care	Avoiding vehicle damage
Tailpipes	Clean with cleaning agents recommended by Mercedes-Benz, particularly in the winter and after washing the vehicle.	Use acid-free cleaning agents.
Trailer hitch	• Remove rust on the ball, e.g. with a wire brush. • Remove dirt with a lint-free cloth. • After cleaning, oil or grease the ball head lightly. • Observe the cleaning instructions in the operating instructions of the trailer hitch manufacturer.	Do not clean the ball neck with solvents or a high-pressure cleaner.

Notes on care of the interior

WARNING Risk of injury from plastic parts breaking off after the use of solvent-based care products

Care and cleaning products containing solvents can cause surfaces in the cockpit to become porous.

When the airbags are deployed, plastic parts may break away.

▶ Do not use any care or cleaning products containing solvents to clean the cockpit.

WARNING Risk of injury or death from bleached seat belts

Bleaching or dyeing seat belts can severely weaken them.

This can, for example, cause seat belts to tear or fail in an accident.

▶ Never bleach or dye seat belts.

Observe the following information:

	Information on cleaning and care	Avoiding vehicle damage
Seat belts	Clean with warm water and soap solution.	• Do not use chemical cleaning agents. • Do not dry seat belts by heating them to over 80 °C or exposing them to direct sunlight.
Display	Clean the surface carefully with a microfibre cloth and TFT/LCD display cleaner.	• Switch off the display and allow to cool. • Do not use any other cleaning products.
Plastic trim	• Clean with a damp microfibre cloth. • If the trim is very dirty: use a cleaning agent recommended by Mercedes-Benz.	• Do not apply stickers, films etc. • Do not allow cosmetics, insect repellent or sun cream to come in contact with the plastic trim.
Genuine wood/trim elements	• Clean with a microfibre cloth. • Black piano-lacquer look: clean with a damp cloth and soap solution. • If the trim is very dirty: use a cleaning agent recommended by Mercedes-Benz.	Do not use solvent-based cleaning agents, polishes or waxes.
Roof lining	Clean with a brush or dry shampoo.	
Carpet	Use carpet and textile cleaning agents recommended by Mercedes-Benz.	

	Information on cleaning and care	Avoiding vehicle damage
Genuine leather seat covers	• Clean with a damp cloth and then wipe with a dry cloth. • Leather care: use leather care agents that have been recommended by Mercedes-Benz.	Do not allow the leather to become too damp. Do not use a microfibre cloth.
DINAMICA seat covers	Clean with a damp cloth.	Do not use a microfibre cloth.
Artificial leather seat covers	Clean with a damp cloth and 1% soap solution.	Do not use a microfibre cloth.
Cloth seat covers	Clean with a damp cloth and 1% soap solution and allow to dry.	

Emergency

Removing the safety vest

The safety vests are located in the safety vest compartments in the driver's and front passenger door stowage compartments.

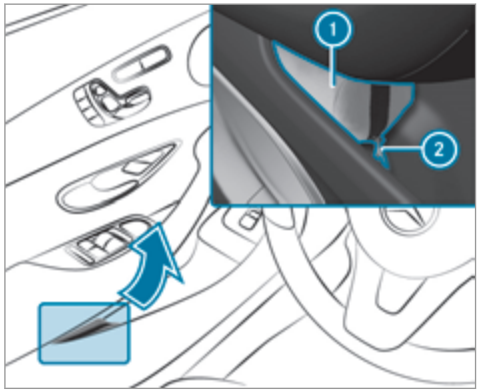

▶ **To remove:** pull out safety vest bag ① by loop ②.

▶ Open safety vest bag ① and pull out the safety vest.

ⓘ There are also safety vest compartments in the rear door stowage compartments in which safety vests can be stowed.

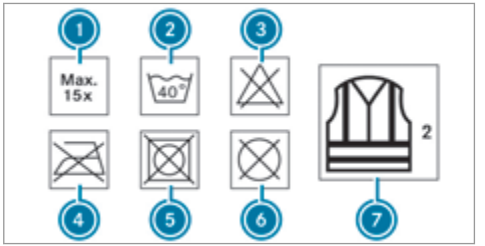

① Maximum number of washes
② Maximum wash temperature
③ Do not bleach
④ Do not iron
⑤ Do not use a laundry dryer
⑥ Do not dry-clean
⑦ This is a class 2 vest

The requirements defined by the legal standard are only fulfilled if the safety vest is the correct size and is fully closed.

Replace the safety vest if:

- it is damaged or dirt on the reflective strips can no longer be removed
- the maximum number of washes is exceeded
- the fluorescence of the safety vest has faded

Warning triangle

Removing the warning triangle

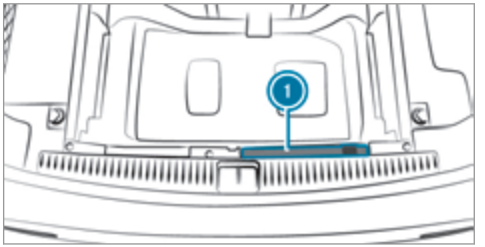

▶ Remove warning triangle ①.

Setting up the warning triangle

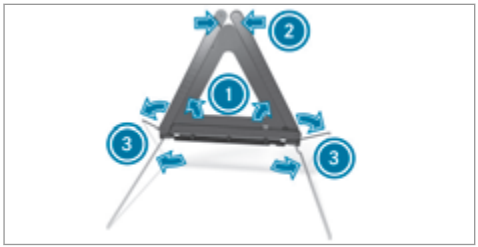

- Fold side reflectors (1) upwards to form a triangle and attach at the top using press stud (2).
- Fold legs (3) down and out to the side.

First-aid kit (soft sided)

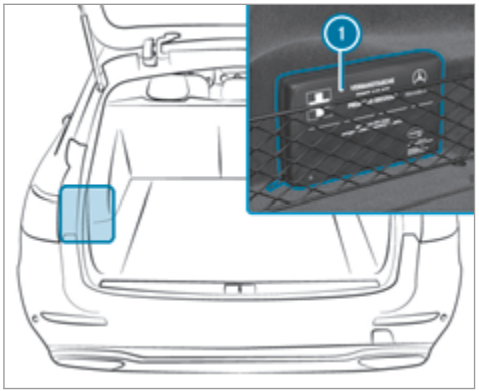

First-aid kit (soft sided) (1) is in the load compartment in the left-hand stowage net.

Removing the fire extinguisher

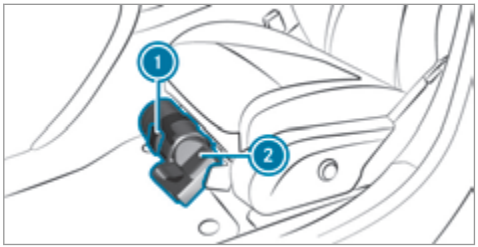

- **Left-hand drive vehicle:** Pull tab (1) upwards.
- **Right-hand drive vehicle:** Pull tab (1) downwards.
- Remove fire extinguisher (2).

Flat tyre

Notes on flat tyres

⚠ **WARNING** Risk of accident due to a flat tyre

A flat tyre severely affects the driving characteristics as well as the steering and braking of the vehicle.

Tyres without run-flat characteristics:

- ▶ Do not drive on with a flat tyre.
- ▶ Change the flat tyre immediately with the emergency spare wheel or spare wheel. Alternatively, consult a qualified specialist workshop.

Tyres with run-flat characteristics:

- ▶ Observe the information and warning notes on MOExtended tyres (run-flat tyres).

In the event of a flat tyre, the following options are available depending on your vehicle's equipment:

- **Vehicles with MOExtended tyres:** it is possible to continue the journey for a short period of time. Make sure you observe the notes on MOExtended tyres (run-flat tyres) (→ page 320).
- **Vehicles with a TIREFIT kit:** you can repair the tyre so that it is possible to continue the journey for a short period of time. To do this, use the TIREFIT kit (→ page 322).
- **Vehicles with a Mercedes-Benz emergency call system:** in the event of a flat tyre, consult the Mercedes-Benz emergency call system Customer Assistance Centre.
- Change the wheel (→ page 352).

ⓘ The emergency spare wheel is only available in certain countries.

MOExtended tyres (run-flat tyres)

With MOExtended tyres (run-flat tyres), you can continue to drive your vehicle even if there is a total loss of pressure in one or more tyres. However, the tyre affected must not show any clearly visible damage.

You can recognise MOExtended tyres by the MOExtended marking which appears on the side wall of the tyre.

Vehicles with tyre pressure loss warning system: MOExtended tyres may only be used in conjunction with an activated tyre pressure loss warning system.

Vehicles with tyre pressure monitoring system: MOExtended tyres may only be used in conjunction with an activated tyre pressure monitoring system.

If a pressure loss warning message appears in the multifunction display:

- Check the tyres for damage
- If driving on, observe the following notes

⚠ **WARNING** Risk of accident when driving in run-flat mode

When driving in run-flat mode, the handling characteristics are impaired. e.g. when cor-

nering, when accelerating strongly and when braking.

- ▶ Do not exceed the maximum permissible speed.
- ▶ Avoid any abrupt steering and driving manoeuvres as well as driving over obstacles (kerbs, pot holes, off-road). This applies, in particular, to a loaded vehicle.
- ▶ Stop driving in run-flat mode if you notice:
  - banging noise
  - vehicle vibration
  - smoke which smells like rubber
  - continuous ESP® intervention
  - cracks in tyre side walls
- ▶ After driving in run-flat mode, have the rims checked by a qualified specialist workshop with regard to their further use.
- ▶ The defective tyre must be replaced in every case.

Driving distance possible in limp-home mode after the pressure loss warning

Load condition	Driving distance possible in limp-home mode
Partially laden	80 km
Fully laden	30 km

- The driving distance possible in limp-home mode may vary depending on the driving style.
- Maximum permissible speed 80 km/h.

If a tyre has gone flat and cannot be replaced with an MOExtended tyre, a standard tyre may be used as a temporary measure.

TIREFIT kit storage location

The TIREFIT kit is located under the load compartment floor.

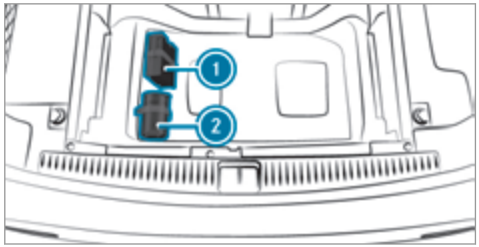

1 Tyre inflation compressor
2 Tyre sealant bottle

ⓘ You can find information on the power category and/or electrical details on the back of the tyre inflation compressor.

- LK2 – 12 V/15A, 180 W, 0.8 kg

At a distance of approximately 1 m to the tyre inflation compressor and approximately 1.6 m above the ground, the following sound pressure levels apply:

- Sound power level L_{LA} 74.8 dB (A)

The tyre inflation compressor is maintenance-free. If there is a malfunction, please contact a qualified specialist workshop.

Using the TIREFIT kit

Have the following readily available:

- tyre sealant bottle
- enclosed TIREFIT sticker
- tyre inflation compressor

You can use TIREFIT tyre sealant to seal punctures of up to 4 mm, particularly those in the tyre contact surface. You can use TIREFIT in outside temperatures down to -20 °C.

⚠ WARNING Risk of accident when using tyre sealant

In the following situations, the tyre sealant is unable to provide sufficient breakdown assistance, as it is unable to seal the tyre properly:

- there are cuts or punctures in the tyre larger than those previously mentioned.
- the wheel rim is damaged.
- you have driven at very low tyre pressures or on a flat tyre.

▶ Do not drive on.

▶ Consult a qualified specialist workshop.

⚠ WARNING Risk of injury and poisoning from tyre sealant

Tyre sealant is hazardous to health and causes irritation. Do not allow it to come into contact with your skin, eyes or clothing, and do not swallow it. Do not inhale any vapours. Keep the tyre sealant away from children.

Observe the following if you come into contact with the tyre sealant:

▶ Rinse off the tyre sealant from your skin using water immediately.

▶ If tyre sealant gets into your eyes, thoroughly rinse them using clean water immediately.

▶ If tyre sealant has been swallowed, thoroughly rinse out your mouth immediately and drink plenty of water. Do not induce vomiting and seek medical attention immediately.

▶ Change out of clothing which has come into contact with tyre sealant immediately.

▶ If an allergic reaction occurs, seek medical attention immediately.

! NOTE Overheating due to the tyre inflation compressor running too long

▶ Do not run the tyre inflation compressor for longer than ten minutes without interruption.

Comply with the manufacturer's safety notes on the sticker on the tyre inflation compressor.

Have the tyre sealant bottle replaced every four years at a qualified specialist workshop.

- Do not remove any foreign objects which have penetrated the tyre.

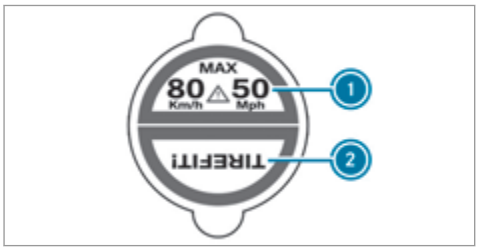

- Affix part (1) of the TIREFIT sticker to the instrument cluster within the driver's field of vision.
- Affix part (2) of the TIREFIT sticker near the valve on the wheel with the defective tyre.

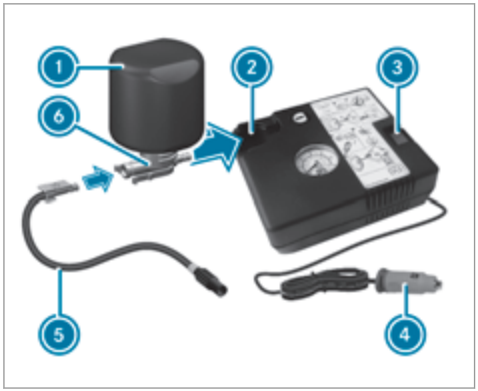

- Pull plug (4) with the cable and hose (5) out of the tyre inflation compressor housing.
- Push the plug of hose (5) into flange (6) of tyre sealant bottle (1) until the plug engages.
- Place tyre sealant bottle (1) head downwards into recess (2) of the tyre inflation compressor.



- Remove the cap from valve (7) on the faulty tyre.
- Screw filling hose (8) onto valve (7).
- Insert plug (4) into a 12 V socket in your vehicle.
- Switch the ignition on.
- Press on and off switch (3) on the tyre inflation compressor.
  The tyre inflation compressor is switched on. The tyre is inflated. First, tyre sealant is pumped into the tyre. The pressure may briefly rise to approximately 500 kPa (5 bar/73 psi).

Do not switch off the tyre inflation compressor during this phase.

- Let the tyre inflation compressor run for a maximum of ten minutes.
  The tyre should then have attained a tyre pressure of at least 200 kPa (2.0 bar/29 psi).

If tyre sealant leaks out, make sure you clean the affected area as quickly as possible. It is preferable to use clean water.

If you get tyre sealant on your clothing, have it cleaned as soon as possible with perchloroethylene.

If, after ten minutes, a tyre pressure of 200 kPa (2.0 bar/29 psi) has not been achieved:

- Switch off the tyre inflation compressor.
- Unscrew the filling hose from the valve of the defective tyre.

Please note that tyre sealant may leak out when unscrewing the filling hose.

- Very slowly drive forwards or reverse approximately 10 m.
- Pump up the tyre again.
  After a maximum of ten minutes the tyre pressure must be at least 200 kPa (2.0 bar/29 psi).

WARNING Risk of accident due to the specified tyre pressure not being achieved

If the specified tyre pressure is not achieved after the specified time, the tyre is too badly damaged. The tyre sealant cannot repair the tyre in this instance.

Damaged tyres and a tyre pressure that is too low can significantly impair braking and handling characteristics.

- Do not drive on.
- Consult a qualified specialist workshop.

If, after ten minutes, a tyre pressure of 200 kPa (2.0 bar/29 psi) has been achieved:

WARNING Risk of accident from driving with sealed tyres

A tyre temporarily sealed with tyre sealant impairs handling characteristics and is not suitable for higher speeds.

- Adapt your driving style accordingly and drive carefully.
- Do not exceed the specified maximum speed with a tyre that has been sealed using tyre sealant.

- Observe the maximum permissible speed for a tyre sealed with tyre sealant 80 km/h.
- Affix the upper section of the TIREFIT sticker to the instrument cluster where it will be easily seen by the driver.

NOTE Staining from leaking tyre sealant

After use, excess tyre sealant may leak out from the filling hose.

- Therefore, place the filling hose in the plastic bag that contained the TIREFIT kit.

ENVIRONMENTAL NOTE Environmental pollution caused by environmentally irresponsible disposal

Tyre sealant contains pollutants.

- Have the tyre sealant bottle disposed of professionally, e.g. at a Mercedes-Benz service centre.

- Switch off the tyre inflation compressor.
- Unscrew the filling hose from the valve of the defective tyre.
- Stow the tyre sealant bottle, the tyre inflation compressor and the warning triangle.
- **Pull away immediately.**
- Stop after driving for approximately ten minutes and check the tyre pressure using the tyre inflation compressor.
  The tyre pressure must now be at least 130 kPa (1.3 bar/19 psi).

WARNING Risk of accident due to the specified tyre pressure not being achieved

If the specified tyre pressure is not achieved after a brief drive, the tyre is too badly damaged. The tyre sealant cannot repair the tyre in this instance.

Damaged tyres and a tyre pressure that is too low can significantly impair braking and handling characteristics.

- Do not drive on.
- Consult a qualified specialist workshop.

Countries that have Mercedes-Benz Service24h: a sticker with the phone number can also be found in your vehicle, e.g. on the B-pillar on the driver's side.

- Correct the tyre pressure if it is still at least 130 kPa (1.3 bar/19 psi). See the tyre pressure table on the fuel filler flap for values.
- **To increase the tyre pressure:** switch on the tyre inflation compressor.

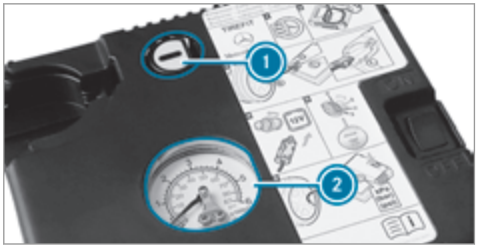

- **To reduce the tyre pressure:** press pressure release button (1) next to manometer (2).
- When the tyre pressure is correct, unscrew the filling hose from the valve of the sealed tyre.
- Screw the valve cap onto the tyre valve of the sealed tyre.
- Pull the tyre sealant bottle out of the tyre inflation compressor.
  The filling hose stays on the tyre sealant bottle.

▶ Drive to the nearest qualified specialist workshop and have the tyre, tyre sealant bottle and filling hose replaced there.

Battery (vehicle)

Notes on the 12 V battery

⚠ WARNING Risk of an accident due to work carried out incorrectly on the battery

Work carried out incorrectly on the battery can, for example, lead to a short circuit. This can lead to function restrictions in safety-relevant systems, e.g. the lighting system, ABS (anti-lock braking system) or ESP® (Electronic Stability Program). The operating safety of your vehicle may be restricted.

You could lose control of the vehicle in the following situations:

- when braking
- in the event of abrupt steering manoeuvres and/or when the vehicle's speed is not adapted to the road conditions

▶ In the event of a short circuit or a similar incident, contact a qualified specialist workshop immediately.

▶ Do not continue driving.

▶ Always have work on the battery carried out at a qualified specialist workshop.

- Further information on ABS (→ page 182)
- Further information on ESP®(→ page 183)

For safety reasons, Mercedes-Benz recommends that you only use batteries which have been tested and approved for your vehicle by Mercedes-Benz. These batteries provide increased impact protection to prevent vehicle occupants from suffering acid burns should the battery be damaged in the event of an accident.

All vehicles except vehicles with a lithium-ion battery

⚠ WARNING Risk of explosion due to electrostatic charge

Electrostatic charge can cause sparks which may ignite the highly flammable gas mixture in the battery.

▶ To discharge any electrostatic charge that may have built up, touch the metal vehicle body before handling the battery.

The highly flammable gas mixture is created while the battery is charging and during starting assistance.

⚠ WARNING Danger of chemical burns from the battery acid

Battery acid is caustic.

▶ Avoid contact with the skin, eyes or clothing.

▶ Do not lean over the battery.

- Do not inhale battery gases.
- Keep children away from the battery.
- Immediately rinse battery acid off thoroughly with plenty of clean water and seek medical attention immediately.

All vehicles

ENVIRONMENTAL NOTE Environmental damage due to improper disposal of batteries



Batteries contain pollutants. It is illegal to dispose of them with the household rubbish.

- 

  Dispose of batteries in an environmentally responsible manner. Take discharged batteries to a qualified specialist workshop or to a collection point for used batteries.

If you have to connect the 12 volt battery, contact a qualified specialist workshop.

Comply with safety notes and take protective measures when handling batteries.



Risk of explosion



Fire, naked flames and smoking are prohibited when handling the battery. Avoid creating sparks.



Electrolyte or battery acid is corrosive. Avoid contact with the skin, eyes or clothing. Wear suitable protective clothing, in particular gloves, an apron and a face mask. Immediately rinse electrolyte or acid splashes off with clean water. Consult a doctor if necessary.



Wear safety glasses.



Keep children away.



Observe this Owner's Manual.

If you do not intend to use the vehicle over an extended period of time:

- Activate standby mode, or
- Connect the battery to a battery charger approved by Mercedes-Benz, or
- Consult a qualified specialist workshop to disconnect the battery.

Starting assistance and charging the 12 V battery

Vehicles with a lithium-ion battery

- When charging the battery and during starting assistance, always use the jump-start connection point in the engine compartment.

! NOTE Damage to the battery from overvoltage

When charging using a battery charger without a maximum charging voltage, the battery or the on-board electronics may be damaged.

- Only use battery chargers with a maximum charging voltage of 14.4 V.

All other vehicles

- When charging the battery and during starting assistance, always use the jump-start connection point in the engine compartment.

! NOTE Damaging the battery through overvoltage

When using a battery charger without a maximum charging voltage, the battery or the vehicle electronics may be damaged.

- Only use battery chargers with a maximum charging voltage of 14.8 V.

⚠ WARNING Risk of explosion from hydrogen gas igniting

A battery generates hydrogen gas during the charging process. If there is a short circuit or sparks start to form, there is a danger of the hydrogen gas igniting.

- Make sure that the positive terminal of the connected battery does not come into contact with vehicle parts.
- Never place metal objects or tools on a battery.
- When connecting and disconnecting the battery, you must observe the described order for the battery clamps.
- When giving starting assistance, always make sure that you only connect battery terminals with identical polarity.
- During starting assistance, you must observe the described order for connecting and disconnecting the jump lead.
- Do not connect or disconnect the battery clamps while the engine is running.

⚠ WARNING Risk of explosion during charging process and starting assistance

During the charging process and starting assistance, the battery may release an explosive gas mixture.

- Avoid fire, naked flames, creating sparks and smoking.
- Make sure that there is sufficient ventilation during the charging process and during starting assistance.
- Do not lean over a battery.

If the indicator/warning lamps in the instrument cluster do not light up at low temperatures, it is very likely that the discharged battery has frozen.

WARNING Risk of explosion from a frozen battery

A discharged battery may freeze at temperatures slightly above or below freezing point.

During starting assistance or battery charging, battery gas may be released.

- Always thaw a frozen battery out first before charging it or performing starting assistance.

NOTE Shortening the service life of the battery by charging the battery at low temperatures

Charging the battery at very low temperatures may shorten the service life of the battery and have a negative effect on starting.

- Do not charge the battery at very low temperatures.

The service life of a battery that has been thawed may be dramatically shortened.

It is recommended that you have a thawed battery checked at a qualified specialist workshop.

All vehicles

NOTE Damage caused by numerous or extended attempts to start the engine

Numerous or extended attempts to start the engine may damage the catalytic converter due to non-combusted fuel.

- Avoid numerous and extended attempts to start the engine.

Observe the following points during starting assistance and when charging the battery:

- Only use undamaged jump leads/charging cables with a sufficient cross-section and insulated terminal clamps.
- Non-insulated parts of the terminal clamps must not come into contact with other metal parts while the jump lead/charging cable is connected to the battery/jump-start connection point.
- The jump lead/charging cable must not come into contact with any parts which may move when the engine is running.
- Always make sure that neither you nor the battery is electrostatically charged.
- Keep away from fire and naked flames.
- Do not lean over the battery.
- **When charging:** only use battery chargers tested and approved by Mercedes-Benz and read the battery charger's operating instructions before charging the battery.

Observe the additional following points during starting assistance:

- Starting assistance may only be provided using batteries with a nominal voltage of 12 V.
- The vehicles must not touch.
- **Petrol engine:** Only accept starting assistance if the engine and exhaust system are cold.

- Secure the vehicle by applying the electric parking brake.

- **Automatic transmission:** Shift the transmission to position P.
- **Manual transmission:** Shift into neutral.
- Make sure that the ignition and all electrical consumers are switched off.
- Open the engine bonnet.

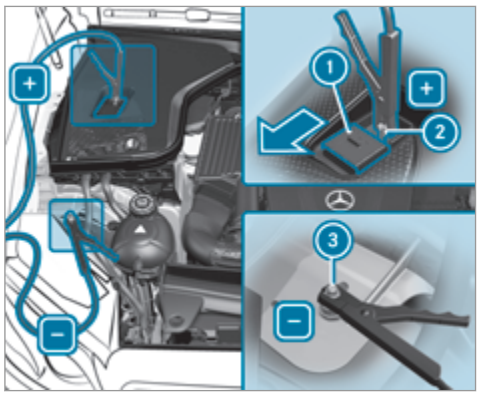

- Slide cover 1 of positive clamp 2 on the jump-starting connection point in the direction of the arrow.
- Connect positive clamp 2 on your vehicle to positive pole of donor battery using the jump lead/charging cable. Always begin with positive clamp 2 on your own vehicle first.
- **During the starting assistance procedure:** start the engine of the donor vehicle and run at idle speed.
- Connect the negative pole of the donor vehicle and earth point 3 of your own vehicle by using the jump lead/charging cable. Begin with the donor battery first.
- **During starting assistance:** start the engine of your own vehicle.
- **During the charging process:** start the charging process.
- **During starting assistance:** let the engines run for several minutes.
- **During starting assistance:** before disconnecting the jump lead, switch on an electrical consumer on your own vehicle, e.g. the rear window heater or lighting.

When the starting assistance/charging process is complete:

- First, remove the jump lead/charging cable from earth point 3 and negative pole of the donor vehicle, then from positive clamp 2 and positive pole of the donor vehicle. Begin each time with the contacts on your own vehicle first.
- After removing the jump lead/charging cable, close cover 1 of positive clamp 2.

You can obtain further information on starting assistance at any qualified specialist workshop.

Tow starting or towing away

Permitted towing methods

Mercedes-Benz recommends transporting your vehicle in the case of a breakdown, rather than towing it away.

NOTE Damage to the vehicle due to towing away incorrectly

- Observe the instructions and notes on towing away.

Permitted towing methods

	 Both axles on the ground	 Front axle raised	 Rear axle raised
Vehicles with manual transmission	Yes, maximum 50 km at 50 km/h	Yes, maximum 50 km at 50 km/h	Yes, maximum 50 km at 50 km/h
Vehicles with automatic transmission	Yes, maximum 50 km at 50 km/h	No	Yes if the steering wheel is fixed in the centre position with a steering wheel lock.
4MATIC vehicles	Yes, maximum 50 km at 50 km/h	No	No

Towing with a raised axle: towing should be performed by a towing company.

Towing the vehicle with both axles on the ground

- Observe the notes on the permitted towing methods (→ page 330) (→ page 331).

▶ Make sure that the battery is connected and charged.

When the battery is discharged:

- the engine cannot be started.
- the electric parking brake cannot be released or applied.
- **vehicles with automatic transmission:** the automatic transmission cannot be shifted to position N or P.

ⓘ **Vehicles with automatic transmission:** if the automatic transmission cannot be shifted to position N, transport the vehicle (→ page 333). A towing vehicle with lifting equipment is required for vehicle transport.

! NOTE Damage due to towing away at excessively high speeds or over long distances

The drivetrain could be damaged when towing at excessively high speeds or over long distances.

▶ A towing speed of 50 km/h must not be exceeded.

▶ A towing distance of 50 km must not be exceeded.

⚠ WARNING Risk of accident when towing a vehicle which is too heavy

If the vehicle being tow-started or towed away is heavier than the permissible gross mass, the following situations can occur:

- the towing eye may become detached.
- the car/trailer combination may swerve or even overturn.

▶ If another vehicle is tow-started or towed away, its weight must not exceed the permissible gross mass of your own vehicle.

If a vehicle must be tow-started or towed away, its weight must not exceed the permissible gross mass of the towing vehicle.

▶ Information on the permissible gross mass of the vehicle can be found on the vehicle identification plate .

▶ **Vehicles with automatic transmission:** do not open the driver's door or front passenger door, otherwise the automatic transmission automatically shifts to position P.

▶ Fit the towing eye (→ page 335).

▶ Attach the tow bar.

! NOTE Damage due to incorrect connection

▶ Only connect the tow rope or tow bar to the towing eyes.

ⓘ You can also attach the tow bar to the trailer hitch.

▶ Deactivate the automatic locking mechanism (→ page 67).

▶ Do not activate the HOLD function.

▶ Deactivate tow-away protection (→ page 85).

▶ Deactivate Active Brake Assist (→ page 192).

- **Vehicles with automatic transmission:** shift the automatic transmission to position N.
- **Vehicles with manual transmission:** shift to neutral N.
- Release the electric parking brake.
- **Vehicles with manual transmission:** switch on the ignition, otherwise the steering wheel locking may engage.

⚠ **WARNING** Risk of accident due to limited safety-related functions during the towing process

Safety-related functions are limited or no longer available in the following situations:

- the ignition is switched off.
- the brake system or power steering system is malfunctioning.
- the energy supply or the on-board electrical system is malfunctioning.

When your vehicle is then towed away, significantly more effort may be required to steer and brake than is normally required.

- Use a tow bar.
- Make sure that the steering wheel can move freely, before towing the vehicle away.

! **NOTE** Damage due to excessive tractive power

If you pull away sharply, the tractive power may be too high and the vehicles could be damaged.

- Pull away slowly and smoothly.

Loading the vehicle for transport

- Observe the notes on towing away (→ page 331).
- Connect the tow bar to the towing eye to load the vehicle.

ⓘ You can also attach the tow bar to the trailer hitch.

- **Vehicles with automatic transmission:** shift the automatic transmission to position N.

ⓘ **Vehicles with automatic transmission:** the automatic transmission may be locked in position P in the event of damage to the electrical system. To shift to N, provide the on-board electrical system with power (→ page 328).

- **Vehicles with manual transmission:** shift to neutral.
- Load the vehicle onto the transporter.
- **Vehicles with automatic transmission:** shift the automatic transmission to position P.
- **Vehicles with manual transmission:** engage first or reverse gear.
- Use the electric parking brake to secure the vehicle and prevent it from rolling away.
- Only secure the vehicle by the wheels.

Vehicles with ADS PLUS (Adaptive Damping System PLUS)

⚠ **WARNING** Risk of accident when transporting vehicles with AIR BODY CONTROL

The reduced damping forces on the vehicle being transported can cause the vehicle/trailer combination to start to swing.

As a result, when transporting vehicles with AIR BODY CONTROL the vehicle/trailer combination may start to skid. Consequently, you could lose control of your vehicle.

There is a risk of accident and injury.

- ▶ Load the vehicle correctly onto the transporter.
- ▶ Secure the vehicle on all four wheels with suitable tensioning straps.
- ▶ Do not exceed the maximum permissible speed of 60 km/h when transporting.

! **NOTE** Damage to the vehicle from securing it incorrectly

- ▶ After loading, the vehicle must be secured on all four wheels. Otherwise, the vehicle could be damaged.
- ▶ A minimum distance of 20 cm upwards and 10 cm downwards must be kept to the transport platform.

▶ Secure the vehicle on all four wheels after loading.

4MATIC vehicles/vehicles with automatic transmission

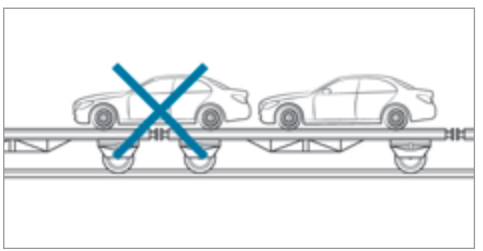

▶ Make sure that the front and rear axles come to rest on the same transport vehicle.

! **NOTE** Damage to the drivetrain due to incorrect positioning

- ▶ Do not position the vehicle above the connection point of the transport vehicle.

Towing eye storage location

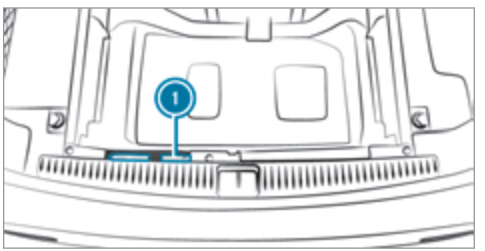

Towing eye (1) is attached to the edge of the luggage compartment under the load compartment floor.

Vehicles with folding bench seat: the towing eye is located under a cover.

Fitting the towing eye

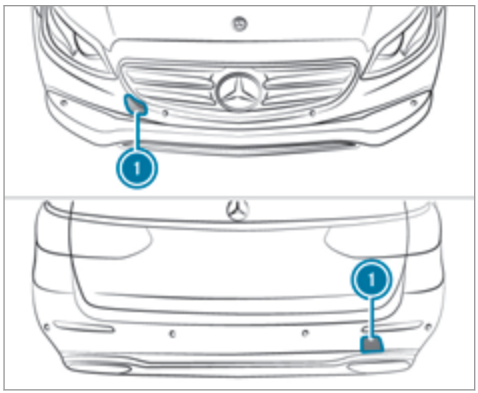

- Press the mark on cover (1) inwards and remove.
- Screw in the towing eye clockwise to the stop.

Vehicles with a trailer hitch: vehicles with a trailer hitch do not have a bracket at the back for the towing eye. Connect the tow bar to the trailer hitch.

ⓘ Make sure that cover (1) engages in the bumper when you remove the towing eye.

NOTE Damage due to incorrect use of the towing eye

When a towing eye is used to recover a vehicle, the vehicle may be damaged in the process.

- Only use the towing eye to tow away or tow start the vehicle.

Tow-starting the vehicle (emergency engine start)

Vehicles with automatic transmission

NOTE Damage to the automatic transmission due to tow-starting

The automatic transmission may be damaged in the process of tow-starting vehicles with automatic transmission.

- Vehicles with automatic transmission must not be tow-started.

- Vehicles with automatic transmission must not be tow-started.

Vehicles with manual transmission

- Observe the notes on towing away (→ page 331).
- If necessary, allow the engine and exhaust system to cool down.
- Switch the ignition on.
- Engage second gear.
- Release the electric parking brake.

- ▶ Tow-start the vehicle while the clutch pedal is fully depressed.
- ▶ Slowly release the clutch pedal.
- ▶ Immediately shift to neutral if the engine starts.
- ▶ Pull over and stop the vehicle safely as soon as possible, paying attention to road and traffic conditions.
- ▶ Remove the tow bar.
- ▶ Remove the towing eye.
- ▶ Have the vehicle checked at a qualified specialist workshop.

Electrical fuses

Notes on electrical fuses

⚠ WARNING Risk of accident and injury due to overloaded lines

If you manipulate or bridge a faulty fuse or if you replace it with a fuse with a higher amperage, the electric line could be overloaded. This could result in a fire.

- ▶ Always replace faulty fuses with specified new fuses containing the correct amperage.

! NOTE Damage caused by incorrect fuses

Incorrect fuses may cause damage to electrical components or systems.

- ▶ Only use Mercedes-Benz approved fuses with the correct fuse rating.

Blown fuses must be replaced with fuses of the same rating, which you can recognise by the colour and fuse rating. The fuse ratings are listed in the fuse assignment diagram.

Fuse assignment diagram: on the fuse box in the load compartment (→ page 338).

! NOTE Damage or malfunctions caused by moisture

Moisture may cause damage to the electrical system or cause it to malfunction.

- ▶ When the fuse box is open, make sure that no moisture can enter the fuse box.
- ▶ When closing the fuse box, make sure that the seal of the lid is positioned correctly on the fuse box.

If the newly inserted fuse also blows, have the cause traced and rectified at a qualified specialist workshop, e.g. a Mercedes-Benz Service Centre.

Ensure the following before replacing a fuse:

- The vehicle is secured against rolling away.
- All electrical consumers are switched off.
- The ignition is switched off.

The electrical fuses are located in various fuse boxes:

- Fuse box in the engine compartment on the driver's side (→ page 337)
- Fuse box on the driver's side of the cockpit (→ page 338)

- Fuse box in the front-passenger footwell (→ page 338)
- Fuse box in the load compartment on the right-hand side of the vehicle, when viewed in the direction of travel (→ page 338)

Fuse box in the engine compartment

Requirements:
Observe the notes on electrical fuses (→ page 336).

Have the following readily available:

- A dry cloth
- A screwdriver

Opening

⚠ **WARNING** Risk of injury from using the windscreen wipers while the engine bonnet is open

When the engine bonnet is open, and the windscreen wipers are set in motion, you can be trapped by the wiper linkage.

▶ Always switch off the windscreen wipers and ignition before opening the engine bonnet.

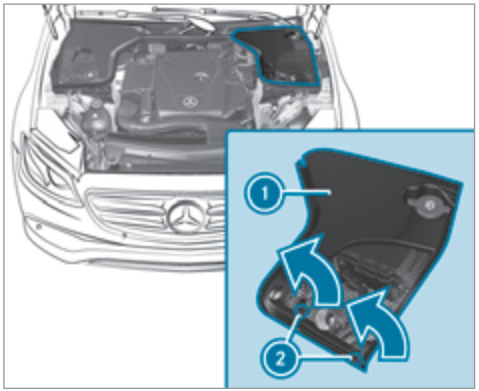

▶ Turn clip ② on cover ① a quarter-turn to the left.

▶ Pull cover ① upwards in the direction of the arrow.

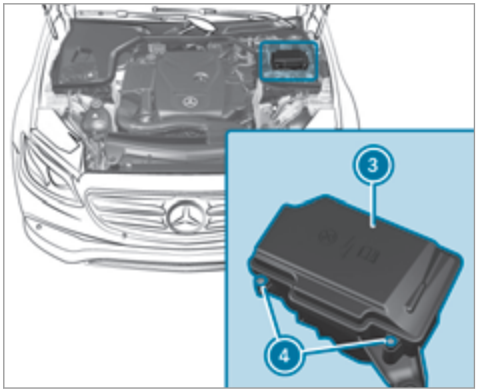

▶ Remove any existing moisture from the fuse box using a dry cloth.

▶ Loosen screws ④, remove fuse box lid ③ from the top.

Closing

▶ Check whether the seal is positioned correctly in the lid.

- ▶ Insert lid into the bracket at the rear of the fuse box.
- ▶ Fold down lid of the fuse box and tighten screws ④.
- ▶ Insert cover ① on both sides and engage safety clips .
- ▶ Close the engine bonnet.

Fuse box on the dashboard

The fuse box is on the side of the dashboard under a cover.

- ▶ Contact a Mercedes-Benz service centre for further information.

Fuse box in the front-passenger footwell

Requirements
Observe the notes on electrical fuses (→ page 336).

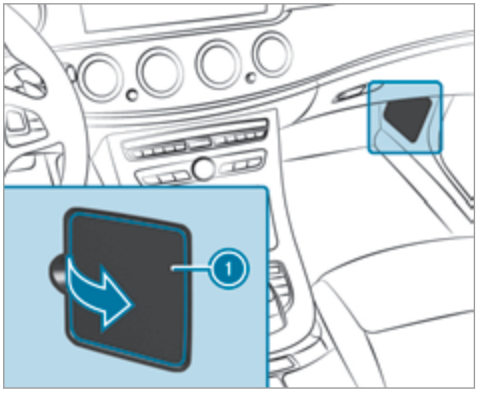

- ▶ Open cover ① in the direction of the arrow and remove it.

Fuse box in the load compartment

Requirements:
Observe the notes on electrical fuses (→ page 336).

- ▶ Fold down the side cover.

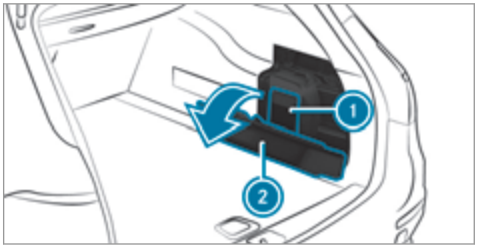

- ▶ Fold cover ② down in the direction of the arrow.
- ▶ Remove cover ①.

The fuse assignment diagram is in a recess on the side of the fuse box.

Noise or unusual handling characteristics

While driving, pay attention to vibrations, noises and unusual handling characteristics, e.g. pulling to one side. This may indicate that the wheels or tyres are damaged. If you suspect that a tyre is defective, reduce your speed immediately. Stop the vehicle as soon as possible to check the wheels and tyres for damage. Hidden tyre damage could also be causing the unusual handling characteristics. If you find no signs of damage, have the tyres and wheels checked at a qualified specialist workshop.

Regular checking of wheels and tyres

⚠ **WARNING** Risk of accident from damaged tyres

Damaged tyres can cause tyre pressure loss.

As a result, you could lose control of your vehicle.

▶ Check the tyres regularly for signs of damage and replace any damaged tyres immediately.

⚠ **WARNING** Risk of aquaplaning due to insufficient tyre tread

Insufficient tyre tread will result in reduced tyre grip. The tyre tread is no longer able to dissipate water.

This means that in heavy rain or slush the risk of aquaplaning is increased, in particular where speed is not adapted to suit the conditions.

If the tyre pressure is too high or too low, tyres may exhibit different levels of wear at different locations on the tyre tread.

▶ Thus, you should regularly check the tread depth and the condition of the tread across the entire width of all tyres.

Minimum tread depth for:

- Summer tyres: 3 mm
- M+S tyres: 4 mm

▶ For safety reasons, replace the tyres before the legally prescribed limit for the minimum tread depth is reached.

Carry out the following checks on all wheels regularly, at least once a month or as required, e.g. prior to a long journey or driving off-road:

- Check the tyre pressure (→ page 340).
- Visual inspection of wheels and tyres for damage.
- Check the valve caps.

  The valves must be protected against moisture and dirt by the valve caps approved especially for your vehicle by Mercedes-Benz.
- Visual check of the tread depth and the tyre contact surface across the entire width.

  The minimum tread depth for summer tyres is 3 mm and for winter tyres 4 mm.

Notes on snow chains

⚠ **WARNING** Risk of accident due to incorrect snow chain fitting

If you have fitted snow chains to the front wheels, the snow chains may drag against the vehicle body or chassis components.

This could cause damage to the vehicle or the tyres.

- ▶ Never fit snow chains on the front wheels.
- ▶ Only fit snow chains on the rear wheels in pairs.

! NOTE Damage to the wheel trim from fitted snow chains

If snow chains are fitted to steel wheels, the wheel trims can be damaged.

- ▶ Remove the wheel trims of steel wheels before fitting snow chains.

- Snow chains are only permissible for certain wheel/tyre combinations. You can obtain information about this from a Mercedes-Benz Service Centre.
- For safety reasons, only use snow chains that have been specifically approved for your vehicle by Mercedes-Benz, or snow chains with the same quality standard.
- If snow chains are fitted, the maximum permissible speed is 50 km/h.
- **Vehicles with Parking Pilot:** Do not use Parking Assist PARKTRONIC if snow chains are fitted.
- **Vehicles with AIR BODY CONTROL:** Only drive at raised vehicle level if snow chains are fitted.

ⓘ You can permanently limit the maximum vehicle speed for driving with winter tyres (→ page 196).

ⓘ You can deactivate ESP® to pull away (→ page 187). This allows the wheels to spin, achieving an increased driving force.

Tyre pressure

Notes on tyre pressure

⚠ WARNING Risk of accident due to insufficient or excessive tyre pressure

Underinflated or overinflated tyres pose the following risks:

- The tyres may burst, especially as the load and vehicle speed increase.
- The tyres may wear excessively and/or unevenly, which may greatly impair tyre traction.
- The driving characteristics, as well as steering and braking, may be greatly impaired.

- ▶ Comply with the recommended tyre pressure and check the tyre pressure of all tyres including the spare wheel regularly:
  - at least once a month
  - when the load changes

- before embarking on a longer journey
- if operating conditions change, e.g. off-road driving

▶ Adjust the tyre pressure as necessary.

Driving with tyre pressure that is too high or too low can:

- Shorten the service life of the tyres.
- Cause increased tyre damage.
- Adversely affect handling characteristics and thus driving safety, e.g. due to aquaplaning.

⚠ **WARNING** Risk of accident from repeated tyre pressure drop

If the tyre pressure drops repeatedly, the wheel, valve or tyre may be damaged.

Insufficient tyre pressure can cause the tyres to burst.

▶ Inspect the tyre for signs of foreign objects.

▶ Check whether the wheel or valve has a leak.

▶ If you are unable to rectify the damage, contact a qualified specialist workshop.

Information on the recommended tyre pressure for the vehicle's factory-fitted tyres can be found on the tyre pressure table on the inside of the fuel filler flap (→ page 341).

Use a suitable pressure gauge to check the tyre pressure. The outer appearance of a tyre does not permit any reliable conclusion about the tyre pressure.

Vehicles with a tyre pressure monitoring system: You can also check the tyre pressure using the on-board computer.

Only correct tyre pressures when the tyres are cold. Conditions for cold tyres:

- The vehicle has been parked with the tyres out of direct sunlight for at least three hours.
- The vehicle has travelled less than 1.6 km.

A rise in the tyre temperature of 10 °C increases the tyre pressure by approx. 10 kPa (0.1 bar, 1.5 psi). Take this into account when checking the tyre pressure of warm tyres.

Notes on trailer operation

Always inflate the rear axle tyres to the recommended tyre pressures on the tyre pressure table for increased load.

Tyre pressure table

The tyre pressure table is on the inside of the fuel filler flap.

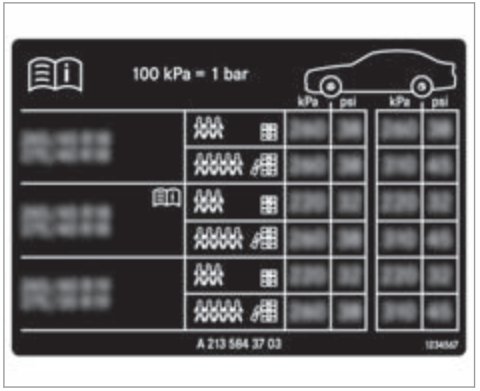

The tyre pressure table shows the recommended tyre pressure for all tyres approved for this vehicle. The recommended tyre pressures apply for cold tyres under various operating conditions, i.e. loading and/or speed of the vehicle.

If one or more tyre sizes precede a tyre pressure, the tyre pressure information following is only valid for those tyre sizes.

If the preceding tyre sizes are complemented by the symbol, the tyre pressure information following shows alternative tyre pressures. These tyre pressures may improve your vehicle's ride comfort. Fuel consumption may then increase slightly.

The load conditions "partially laden" and "fully laden" are defined in the table for different numbers of passengers and amounts of luggage. The actual number of seats may differ from this.

Be sure to also observe the following further related subjects:

- Notes on tyre pressure (→ page 340)

Tyre pressure monitoring system

Function of the tyre pressure monitoring system

The system checks the tyre pressure of the tyres fitted to the vehicle by means of a tyre pressure sensor.

New tyre pressure sensors, e.g. in winter tyres, are automatically taught-in the first time they are driven.

The tyre pressure appears in the multifunction display (→ page 246).

If there is a substantial pressure loss or if the tyre temperature is excessive, a warning will be given:

- Via display messages (→ page 411).
- Via the warning lamp in the instrument cluster (→ page 446).

It is the driver's responsibility to set the tyre pressure to the recommended cold tyre pressure suitable for the operating situation. Set the tyre pressure for cold tyres using a tyre pressure gauge. Note that the correct tyre pressure for the current operating situation must first be taught-in to the tyre pressure monitoring system.

In most cases, the tyre pressure monitoring system will automatically update the new reference values after you have changed the tyre pressure. You can, however, also update the reference values by restarting the tyre pressure monitoring system manually (→ page 343).

System limitations

The tyre pressure monitoring system does not issue a warning:

- If the tyre pressure is set incorrectly.
- If there is a sudden pressure loss caused, for example, by a foreign object penetrating the tyre.
- If there is a malfunction caused by another radio signal source.

Be sure to also observe the following further related subjects:

- Notes on tyre pressure (→ page 340)

Checking the tyre pressure with the tyre pressure monitoring system

Requirements:

- The ignition is switched on.

On-board computer:

Service ▸▸ Tyre pressure

One of the following displays appears:

- Current tyre pressure of each wheel:



- Tyre pressures will be displayed after a few minutes of driving
- Tyre pressure monitor active: the teach-in process of the system is not yet complete. The tyre pressures are already being monitored.

▶ Compare the tyre pressure with the recommended tyre pressure for the current operating condition (→ page 341). Observe the notes on tyre temperature (→ page 340).

ⓘ The values displayed in the multifunction display may deviate from those of the tyre pressure gauge as they refer to sea level. At high altitudes, the tyre pressure values indicated by pressure gauges are higher than those shown by the on-board computer. In this case, do not reduce the tyre pressure.

Make sure you also observe the following related subjects:

- Notes on tyre pressure (→ page 340)

Restarting the tyre pressure monitoring system

Requirements:

- The recommended tyre pressure is correctly set for the respective operating condition on each of the four wheels (→ page 340).

Restart the tyre pressure monitoring system in the following situations:

- The tyre pressure has changed.
- The wheels or tyres have been changed or newly fitted.

On-board computer:

Service ▸▸ Tyre pressure

- Swipe downwards on the Touch Control on the left-hand side of the steering wheel.
  The Use current pressures as new reference values message is shown in the multifunction display.
- Press OK to confirm the restart.
  The Tyre press. monitor restarted message is shown in the multifunction display.

  Current warning messages are deleted and the (!) yellow warning lamp goes out.

  After you have driven for a few minutes, the system checks whether the current tyre pressures are within the specified range. The current tyre pressures are then accepted as reference values and monitored.

Be sure to also observe the following further related subjects:

- Notes on tyre pressure (→ page 340)

Radio-type approval of the tyre pressure monitoring system

Radio equipment approval numbers

Country	Radio equipment approval number
Abu Dhabi	TRA REGISTERED NO: ER37156/15. DEALER NO: DA0047074/10
Argentina	AFTIC:H14788
Dubai	TRA REGISTERED NO: ER37156/15. DEALER NO: DA0047074/10
European Union	Hereby, Schrader Electronics Ltd., declares that this TPMS is in compliance with the essential requirements and other provisions of directive 1999/5/EC. The declaration of conformity may be consulted at emcteam@schrader.co.uk
Jordan	Kingdom of Jordon Type approval for Tyre Pressure sensor. Manufacturer: Schrader Electronics Ltd. Model: AG5SP4 Type Approval Number: TRC/LPD/2015/21 Kingdom of Jordon Type approval for Tyre Pressure sensor. Manufacturer: Schrader Electronics Ltd. Model: MFR Type Approval Number: TRC/LPD/2015/223
Malaysia	RCDD/04A/0615/S(15-2095)
Morocco	AGREE PAR L'ANRT MAROC Numero d'agrement :MR 10216 ANRT 2015 Date d'agrement :18/3/2015

Country	Radio equipment approval number
Mexico	IFT:RCPSCAG15-0627 IFT:RLVSCMF15-0959
Moldova	
Philip-pines	 NTC Type Approved. No:ESD-1510576CNTC
Serbia	
Singapore	Complies with IDA Standards DA 105282

Country	Radio equipment approval number
South Africa	 TA-2015/072 Approved TA-2015/117 Approved

Country	Radio equipment approval number
Ukraine	 Schrader Electronics цім стверджує, що обладнання Радіопередавач моделі AG5SP4 системи контролю тиску в шині автомобіля відповідає вимогам Технічного регламенту радіообладнання і телекомунікаційного кінцевого (термінального) обладнання (Постанова КМУ № 679 від 24 червня 2009 р.) Декларація відповідності знаходиться на сайті Schrader Electronics та надається за запитом на електрону адресу emc-team@schrader.co.uk Schrader Electronics цім стверджує, що обладнання

Country	Radio equipment approval number
	Радіопередавач моделі MFR системи контролю тиску в шині автомобіля відповідає вимогам Технічного регламенту радіообладнання і телекомунікаційного кінцевого (термінального) обладнання (Постанова КМУ № 679 від 24 червня 2009 р.) Декларація відповідності знаходиться на сайті Schrader Electronics та надається за запитом на електрону адресу emc-team@schrader.co.uk
United Arab Emirates	TRA REGISTERED NO :ER37156/15. DEALER NO:DA0047074/10

Brazil



Este equipamento opera em caráter secundário, isto é, não tem direito à proteção contra interferência prejudicial, mesmo de estações do mesmo tipo, e não pode causar interferência a sistemas operando em caráter primário.

Vietnam



Tyre pressure loss warning system

Function of the tyre pressure loss warning system

The tyre pressure loss warning system warns the driver by means of display messages when there is a severe tyre pressure loss.

After a change in tyre pressure, a wheel rotation or a wheel change, the tyre pressure loss warning system has to be taught-in again by being restarted (→ page 347).

The tyre pressure loss warning system does not replace the need to regularly check the tyre pressures.

System limitations

The tyre pressure loss warning system does not issue a warning:

- If the tyre pressure is set incorrectly.
- If there is a sudden pressure loss caused, for example, by a foreign object penetrating the tyre.
- If the pressure loss in several tyres decreases at the same rate.

The tyre pressure loss warning system has a limited or delayed function:

- When the road surface is poor, e.g. snow or gravel.
- When driving with snow chains.
- When driving in a very sporty driving style with high cornering speeds or sudden acceleration.
- When towing a very heavy or large trailer.
- When driving with a high load.

Be sure to also observe the following further related subjects:

- Display messages about the tyres (→ page 411)
- Notes on tyre pressure (→ page 340)

Restarting the tyre pressure loss warning system

Requirements:

- The recommended tyre pressure is correctly set for the respective operating condition on each of the four wheels (→ page 340).

On-board computer:

Service ▸▸ Tyre pressure

The Run Flat Indicator activeRestart with OK message is shown in the multifunction display.

Restart the tyre pressure loss warning system in the following situations:

- The tyre pressure has changed.
- The wheels or tyres have been changed or newly fitted.

▶ Press OK to begin the new start.
The Tyre pressure now OK? message is shown in the multifunction display.

▶ Select Yes.

▶ Press OK to confirm the restart.
The Run Flat Indicator restarted message is shown in the multifunction display.

After you have driven for a few minutes, the tyre pressure loss warning system monitors the set tyre pressures of all the tyres.

Make sure you also observe the following related subjects:

- Notes on tyre pressure (→ page 340)

Wheel change

Notes on selecting, fitting and replacing tyres

You can ask for information regarding permitted wheel/tyre combinations at a Mercedes-Benz Service Centre.

WARNING Risk of accident due to incorrect dimensions of wheels and tyres

If wheels and tyres of the wrong size are used, the wheel brakes or wheel suspension components may become damaged.

- Always replace wheels and tyres with those that fulfil the specifications of the original part.

When replacing wheels, make sure to fit the correct:

- Designation
- Type

When replacing tyres, make sure to fit the correct:

- Designation
- Manufacturer
- Type

WARNING Risk of injury through exceeding the specified tyre load-bearing capacity or the permissible speed rating

Exceeding the specified tyre load-bearing capacity or the permissible speed rating may lead to tyre damage and to the tyres bursting.

- Therefore, only use tyre types and sizes approved for your vehicle model.
- Observe the tyre load-bearing capacity rating and speed rating required for your vehicle.

NOTE Damage to vehicle and tyres due to non-approved tyre types and sizes

For safety reasons, only use wheels, tyres and accessories which have been approved for your vehicle by Mercedes-Benz.

These tyres have been specially adapted for use with the control systems, e.g. ABS or ESP®, and are marked as follows:

- MO = Mercedes-Benz Original
- MOE = Mercedes-Benz Original Extended (run-flat tyres only for certain wheels)
- MO1 = Mercedes-Benz Original (only certain AMG tyres)

Certain characteristics, e.g. handling, vehicle noise emissions or fuel consumption, may otherwise be adversely affected. In addition, when driving with a load, tyre dimension variations could cause the tyres to come into contact with the body and axle components. This could result in damage to the tyres or the vehicle.

Only use tyres, wheels or accessories tested and approved by Mercedes-Benz.

! NOTE Risk to driving safety from retreaded tyres

Retreaded tyres are neither tested nor recommended by Mercedes-Benz, since previous damage cannot always be detected on retreaded tyres.

For this reason driving safety cannot be guaranteed.

▶ Do not use used tyres if you have no information about their previous usage.

! NOTE Possible damage to wheels or tyres when driving over obstacles

Large wheels have a lower tyre section width. The lower the tyre section width, the greater is the risk of damage to wheels or tyres when driving over obstacles.

▶ Avoid obstacles or drive particularly carefully.

! NOTE Damage to electronic component parts from the use of tyre-fitting tools

Vehicles with a tyre pressure monitoring system: electronic component parts are located in the wheel. Tyre-fitting tools should not be applied in the area of the valve.

The tools could damage the electronic component parts.

▶ Have the tyres changed at a qualified specialist workshop only.

! NOTE Damage to summer tyres at low ambient temperatures

Using summer tyres at very low ambient temperatures can cause cracks to form, thereby damaging the tyres permanently.

▶ At temperatures below 7 °C use M+S-tyres.

Accessory parts that are not approved for your vehicle by Mercedes-Benz or that are not being used correctly can impair operating safety.

Before purchasing and using non-approved accessories, visit a qualified specialist workshop and enquire about:

- Suitability
- Legal stipulations
- Factory recommendations

⚠ WARNING Risk of accident with high performance tyres

The special tyre tread in combination with the optimised tyre compound, means that the risk of skidding or hydroplaning on wet roads is increased.

In addition, the tyre grip is greatly reduced at a low outside temperature and tyre running temperature.

▶ Switch on the ESP® and adapt your driving style accordingly.

▶ Use M+S tyres at outside temperatures of less than 50 °F.

Observe the following when selecting, fitting and replacing tyres:

- Country-specific requirements for tyre approval that define a specific tyre type for your vehicle.

  Furthermore, the use of certain tyre types in certain regions and areas of operation can be highly beneficial.
- Only use tyres and wheels of the same type (summer tyres, winter tyres, MOExtended tyres) and the same make.
- Only fit wheels of the same size on one axle (left and right).

  It is only permissible to fit a different wheel size in the event of a flat tyre in order to drive to the specialist workshop.
- Only fit tyres of the correct size onto the wheels.
- Do not make any modifications to the brake system, the wheels or the tyres.

  The use of shims or brake dust shields is not permitted and may invalidate the vehicle's general operating permit.
- **Vehicles with a tyre pressure monitoring system:** All fitted wheels must be equipped with functioning sensors for the tyre pressure monitoring system.
- At temperatures below 7 °C, use winter tyres or all-season tyres marked M+S for all wheels.

  Winter tyres bearing the snowflake symbol in addition to the M+S marking provide the best possible grip in wintry road conditions.
- For M+S tyres, only use tyres with the same tread.
- Observe the maximum permissible speed for the M+S tyres fitted.

  If this is below the vehicle's maximum speed, this must be indicated in an appropriate label in the driver's field of vision.
- Run in new tyres at moderate speeds for the first 100 km.
- Replace the tyres after six years at the latest, regardless of wear.
- **When replacing with tyres that do not feature run-flat characteristics:** Vehicles with MOExtended tyres are not equipped with a TIREFIT kit at the factory. Equip the vehicle with a TIREFIT kit after replacing with tyres that do not feature run-flat characteristics, e.g. winter tyres.

For more information on wheels and tyres, contact a qualified specialist workshop.

Be sure to also observe the following further related subjects:

- Notes on tyre pressure (→ page 340)
- Tyre pressure table (→ page 341)
- Notes on the emergency spare wheel (→ page 357)

Notes on interchanging wheels

WARNING Risk of injury through different wheel sizes

Interchanging the front and rear wheels if the wheels or tyres have different dimensions

may severely impair the driving characteristics.

The disk brakes or wheel suspension components may also be damaged.

▶ Rotate front and rear wheels only if the wheels and tyres are of the same dimensions.

Interchanging the front and rear wheels if the wheels or tyres have different dimensions can render the general operating permit invalid.

The wear patterns on the front and rear wheels differ:

- Front wheels wear more on the shoulder of the tyre
- Rear wheels wear more in the centre of the tyre

On vehicles with the same front and rear wheel size, you can interchange the wheels every 5000 to 10000 km, depending on the wear. Ensure the direction of rotation is maintained for the wheels.

It is imperative to observe the instructions and safety notes on "Wheel change" when doing so.

Notes on storing wheels

- After removing wheels, store them in a cool, dry and preferably dark place.
- Protect the tyres from contact with oil, grease or fuel.

Overview of the tyre-change tool kit

Apart from some country-specific variants, vehicles are not equipped with a tyre-change tool kit. For more information on which tyre-changing tools are required and approved for performing a tyre change on your vehicle, consult a qualified specialist workshop.

Necessary tyre-changing tools may include, for example:

- jack
- chock
- wheel spanner
- centring pin

ⓘ The jack weighs approximately 3.4 kg. The maximum load capacity of the jack can be found on the sticker affixed to the jack. The jack is maintenance-free. If there is a malfunction, please contact a qualified specialist workshop.

The tyre-change tool kit is in tool bag ① under the load compartment floor.

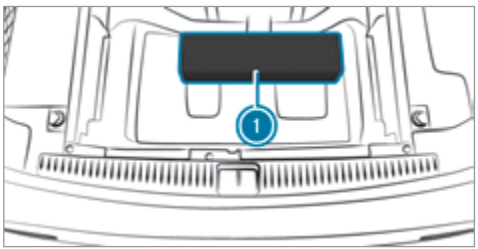

① Tool bag

Tool bag ① contains:

- jack
- gloves
- wheel spanner

- centring pin
- folding wheel chock
- ratchet for jack

Setting up the folding wheel chock



Preparing the vehicle for a wheel change

Requirements:

- The required tyre-change tool kit is available. If your vehicle is not equipped with the tyre-change tool kit, consult a qualified specialist workshop to find out about suitable tools.
- The vehicle is not on a slope.
- The vehicle is on solid, non-slippery and level ground.

▶ Apply the electric parking brake manually.
▶ Move the front wheels to the straight-ahead position.
▶ **Vehicles with manual transmission:** Engage first or reverse gear.
▶ **Vehicles with automatic transmission:** Shift into position P.
▶ **Vehicles with AIR BODY CONTROL:** Set the normal vehicle level (→ page 208).
▶ Switch off the engine.
▶ Make sure that the engine cannot be started.
▶ Place chocks or other suitable items under the front and rear of the wheel that is diagonally opposite the wheel you wish to change.
▶ Remove the hub caps if necessary (→ page 352).
▶ Raise the vehicle (→ page 353).

Removing and fitting hub caps

Requirements:

▶ The vehicle is prepared for a wheel change (→ page 352).

Plastic hub cap

▶ **To remove:** turn the centre cover of the hub cap anti-clockwise and remove the hub cap.
▶ **To fit:** make sure that the centre cover of the hub cap is turned anti-clockwise.
▶ Position the hub cap and turn the centre cover clockwise until the hub cap engages physically and audibly.

Aluminium hub cap

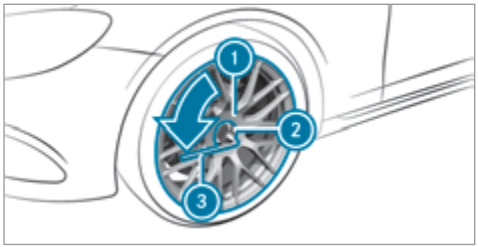

▶ **To remove:** position socket (2) on hub cap (1).

ⓘ The socket can be found in the tyre-change tool kit.

▶ Position wheel spanner (3) on socket (2).

▶ Using wheel spanner (3), turn hub cap (1) anti-clockwise and remove it.

▶ **To fit:** position hub cap (1) and turn until it is completely flush with the wheel.

▶ Position socket (2) on hub cap (1).

▶ Attach wheel spanner (3) to socket (2) and tighten the hub cap clockwise.
Specified tightening torque: 25 Nm.

▶ Raise the vehicle (→ page 353).

Raising the vehicle when changing a wheel

Requirements:

- There are no persons in the vehicle.
- The vehicle is prepared for a wheel change (→ page 352).
- The hub caps have been removed (→ page 352).

Important notes on using the jack:

- Only use the vehicle-specific jack that has been tested and approved by Mercedes-Benz to raise the vehicle.
- The jack is only designed for raising and holding the vehicle for a short time while a wheel is being changed and not for maintenance work under the vehicle.
- The jack must be placed on a firm, flat and non-slip surface. If necessary, use a large, load-bearing, non-slip underlay.
- The base of the jack must be positioned vertically under the jack support point.

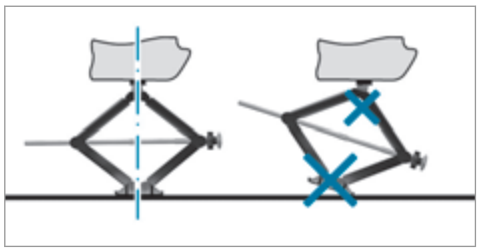

Rules of conduct when the vehicle is raised:

- Never place your hands or feet under the vehicle.
- Do not lie under the vehicle.
- Do not start the engine and do not release the parking brake.
- Do not open or close any doors or the tailgate.

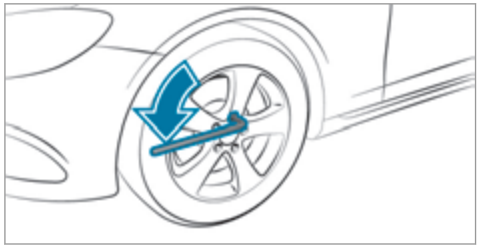

- Using the wheel spanner, loosen the wheel bolts on the wheel you wish to change by about one full turn. Do not unscrew the screws completely.

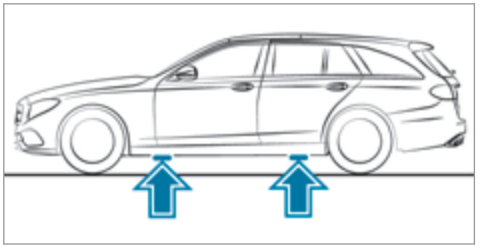

Position of jack support points

WARNING Risk of injury from incorrect positioning of the jack

If you do not position the jack correctly at the appropriate jacking point of the vehicle, the jack could tip with the vehicle raised.

- Only position the jack at the appropriate jacking point of the vehicle. The base of the jack must be positioned vertically under the jacking point of the vehicle.

NOTE Vehicle damage from the jack

If you do not position the jack correctly at the appropriate jack support point of the vehicle, the jack could tip over with the vehicle raised.

- The jack is designed exclusively for jacking up the vehicle at the jack support points.

- Take the ratchet ring spanner out of the tyre-change tool kit and place it on the hexagon nut of the jack so that the letters AUF are visible.

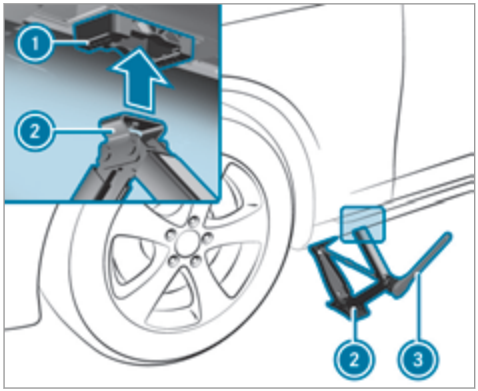

- Position jack (2) at jack support point (1).
- Turn ratchet ring spanner (3) clockwise until jack (2) sits completely on jack support point (1) and the base of the jack lies evenly on the ground.
- Continue to turn ratchet ring spanner (3) until the tyre is raised a maximum of 3 cm off the ground.
- Loosen and remove the wheel (→ page 355).

Removing a wheel

Requirements:

- The vehicle is raised (→ page 353).

When changing a wheel, avoid applying any force to the brake discs, since this could impair the level of comfort when braking.

NOTE Damage to threading from dirt on wheel bolts

- Do not place wheel bolts in sand or on a dirty surface.

- Unscrew the uppermost wheel bolt completely.

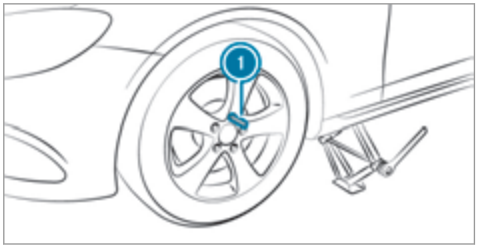

- Screw centring pin (1) instead of the wheel bolt into the threading.
- Unscrew the remaining wheel bolts fully.
- Remove the wheel.
- Fit the new wheel (→ page 355).

Fitting a new wheel

Requirements:

- The wheel is removed (→ page 355).

WARNING Risk of accident from losing a wheel

Oiled, greased or damaged wheel bolt/wheel nut threads or wheel hub/wheel mounting bolt threads can cause the wheel bolts/wheel nuts to come loose.

As a result, you could lose a wheel while driving.

- Never oil or grease the threads.
- In the event of damage to the threads, contact a qualified specialist workshop immediately.
- Have the damaged wheel bolts or damaged hub threads replaced.
- Do not continue driving.

- Observe the information on the choice of tyres (→ page 347).

For tyres with a specified direction of rotation, an arrow on the side wall of the tyre indicates the correct direction of rotation. Observe the direction of rotation when fitting.

- Slide the wheel to be mounted onto the centring pin and push it on.

WARNING Risk of injury from tightening wheel bolts andnuts

If you tighten the wheel bolts or wheel nuts when the vehicle is raised, the jack could tip.

- Only tighten wheel bolts or wheel nuts when the vehicle is on the ground.

- For safety reasons, Mercedes-Benz recommends that you only use wheel bolts which have been approved for Mercedes-Benz vehicles, as well as for the wheel in question.
- Tighten the wheel bolts until they are finger-tight.
- Unscrew the centring pin.
- Tighten the last wheel bolt until it is finger-tight.
- Lower the vehicle(→ page 356).

Lowering the vehicle after a wheel change

Requirements:

- The new wheel has been fitted (→ page 355).

- Place the ratchet ring spanner onto the hexagon nut of the jack so that the letters "AB" are visible.
- **To lower the vehicle:** turn the ratchet ring spanner of the jack anti-clockwise.

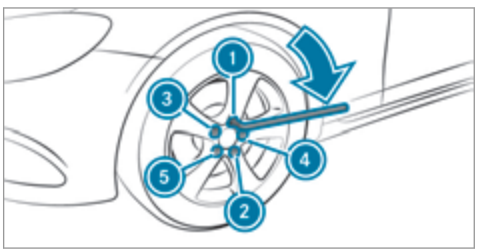

- Tighten the wheel bolts evenly in a crosswise pattern in the sequence indicated (1 to 5). **Specified tightening torque:** 150 Nm.

WARNING Risk of accident due to incorrect tightening torque

The wheels could come loose if the wheel bolts or wheel nuts are not tightened to the prescribed torque.

- Have the tightening torque checked immediately at a qualified specialist workshop after changing a wheel.

- Check the tyre pressure of the newly mounted wheel and adjust accordingly.
- **Vehicles with tyre pressure loss warning system:** restart the tyre pressure loss warning system (→ page 347).
  Exception: if the new wheel is an emergency spare wheel.
- **Vehicles with a tyre pressure monitoring system:** restart the tyre pressure monitoring system (→ page 343).
  Exception: if the new wheel is an emergency spare wheel.

Be sure to also observe the following further related subjects:

- Notes on tyre pressure (→ page 340)

Emergency spare wheel

Notes on the emergency spare wheel

WARNING Risk of accident caused by incorrect wheel and tyre dimensions

The wheel or tyre size and the tyre type of the emergency spare wheel or spare wheel and the wheel to be replaced may differ. Mounting an emergency spare wheel/spare wheel may severely impair the driving characteristics.

To prevent hazardous situations:

- Adapt your driving style accordingly and drive carefully.
- Never fit more than one emergency spare wheel or spare wheel that differs in size.
- Only use an emergency spare wheel or spare wheel of a different size briefly.
- Do not switch off ESP®.
- >Have the emergency spare wheel or spare wheel of a different size replaced at the nearest qualified specialist workshop. The new wheel must have the correct dimensions.

Check the tyre pressure of the emergency spare wheel fitted. Correct the pressure as necessary.

The maximum permissible speed with an emergency spare wheel fitted is 80 km/h.

Do not fit the emergency spare wheel with snow chains.

Replace the emergency spare wheel after six years at the latest, regardless of wear.

Vehicles with a tyre pressure loss warning system: If an emergency spare wheel is fitted the tyre pressure loss warning system cannot function reliably. Only restart the system again when the emergency spare wheel has been replaced with a new wheel.

Vehicles with a tyre pressure monitoring system: If an emergency spare wheel is fitted the tyre pressure monitoring system cannot function reliably. Only restart the system again when the emergency spare wheel has been replaced with a new wheel.
Vehicles with a tyre pressure monitoring system: For a few minutes after an emergency spare wheel is fitted, the system may still display the tyre pressure of the removed wheel.

Be sure to also observe the following further related subjects:

- Notes on tyre pressure (→ page 340)
- Tyre pressure table (→ page 341)

Removing the emergency spare wheel

The emergency spare wheel is secured in the emergency spare wheel bag in the load compartment.

▶ Observe the information on mounting tyres (→ page 347).
▶ Open the tailgate.
▶ Detach the fastening straps.
▶ Unhook the retaining spring hooks of the fastening straps from the brackets.
▶ Remove the emergency spare wheel bag with the emergency spare wheel.
▶ Open the emergency spare wheel bag and remove the emergency spare wheel.

Notes on technical data

The technical data was determined in accordance with EU Directives. The data stated only applies to vehicles with standard equipment. You can obtain further information from a Mercedes-Benz Service Centre.

Only for certain countries: you can find vehicle-specific vehicle data in the COC documents (CERTIFICATE OF CONFORMITY). These documents are delivered with your vehicle.

On-board electronics

Notes on tampering with the engine electronics

NOTE Premature wear through improper maintenance

Improper maintenance may cause vehicle components to wear more quickly and the vehicle's operating permit may be invalidated.

- Always have work on the engine electronics and related components carried out at a qualified specialist workshop.

Two-way radios

Notes on installing two-way radios

WARNING Risk of accident caused by tampering with the RF transmitter

The electromagnetic radiation from RF transmitters may interfere with the vehicle electronics if RF transmitters are tampered with or not correctly retrofitted.

This could jeopardise the operating safety of the vehicle.

- You should have all work on electrical and electronic components carried out at a qualified specialist workshop.

WARNING Risk of accident from incorrect operation of the RF transmitter

If you operate RF transmitters incorrectly in the vehicle, the electromagnetic radiation could interfere with the on-board electronics, e.g.:

- if the RF transmitter is not connected to an exterior aerial
- if the exterior aerial is not correctly mounted or is not of low reflection

This could jeopardise the operating safety of the vehicle.

- Have the low-reflection exterior aerial fitted at a qualified specialist workshop.
- When operating RF transmitters in the vehicle, always connect them to the low-reflection exterior aerial.

NOTE Invalidation of the operating permit due to failure to comply with the instructions for installation and use

The operating permit may be invalidated if the instructions for installation and use of RF transmitters are not observed.

- Only use approved frequency bands.
- Observe the maximum permissible output power in these frequency bands.
- Only use approved aerial positions.

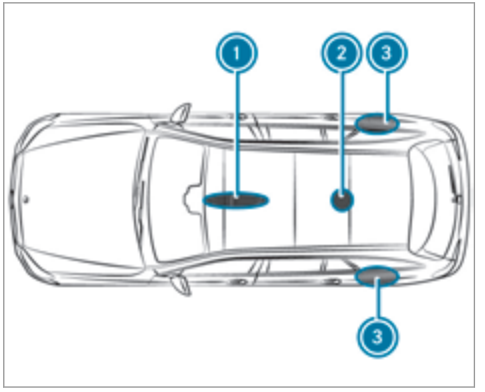

1. Front roof area
2. Rear roof area
3. Rear wing

On vehicles with a panoramic sliding sunroof, fitting an aerial to the front or rear roof area is not permitted.

On the rear wings, it is recommended that you position the aerial on the side of the vehicle closest to the centre of the road.

Use Technical Specification ISO/TS 21609 (Road Vehicles – EMC guidelines for installation of aftermarket radio frequency transmitting equipment) when retrofitting RF (radio frequency) transmitters. Comply with the legal requirements for detachable parts.

If your vehicle has fittings for two-way radio equipment, use the power supply or aerial connections intended for use with the basic wiring. Be sure to observe the manufacturer's Supplements when installing.

Two-way radio transmission output

The maximum transmission output (PEAK) at the base of the aerial must not exceed the values in the following table:

Frequency band and maximum transmission output

Frequency band	Maximum transmission output
Short wave 3 - 54 MHz	100 W
4 m band 74 - 88 MHz	30 W
2 m band 144 - 174 MHz	50 W
Trunked radio system/Tetra 380 - 460 MHz	10 W
70 cm band 420 - 450 MHz	35 W
Mobile communications (2G/3G/4G)	10 W

The following can be used in the vehicle without restrictions:

- RF transmitter with a maximum transmission output of up to 100 mW
- RF transmitters with transmitter frequencies in the 380 - 410 MHz frequency band and a maximum transmission output of up to 2 W (trunked radio system/Tetra)
- Mobile phones (2G/3G/4G)

There are no restrictions when positioning the aerial on the outside of the vehicle for the following frequency bands:

- Trunked radio system/Tetra
- 70 cm band
- 2G/3G/4G

Vehicle identification plate, VIN and engine number

Vehicle identification plate

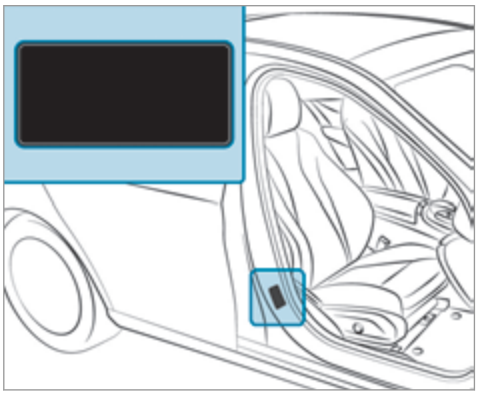

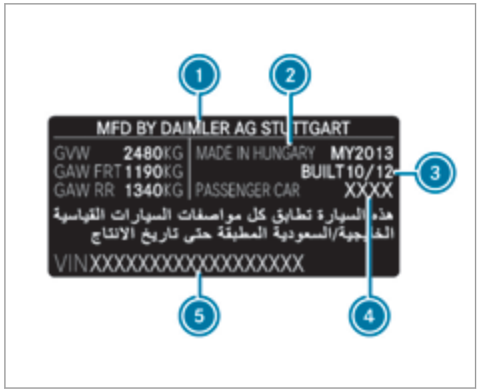

Vehicle identification plate (example: Kuwait)

1. Vehicle manufacturer
2. Place of manufacture
3. Manufacturing date
4. Vehicle model
5. VIN

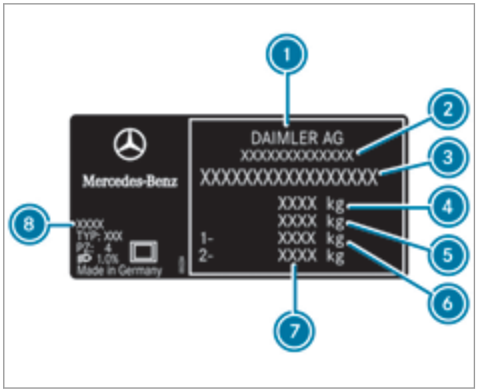

Vehicle identification plate (example: all other countries)

1. Vehicle manufacturer
2. EU type approval number (only for certain countries)
3. VIN (vehicle identification number)
4. Permissible gross mass (kg)
5. Permissible gross mass of vehicle/trailer combination (kg) (only for specific countries)
6. Permissible front axle load (kg)
7. Permissible rear axle load (kg)
8. Paint code

ⓘ The data shown in the image is example data.

VIN in front of the right-hand front seat

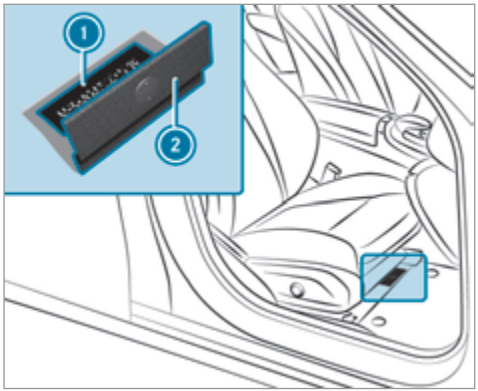

1 VIN (vehicle identification number)
2 Floor covering

VIN on the lower edge of the windscreen

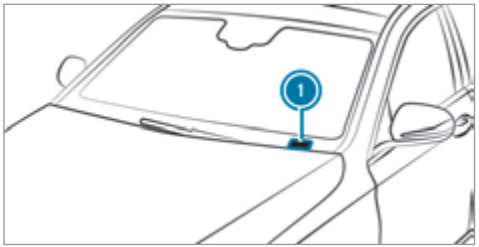

1 VIN (vehicle identification number)

The VIN on the lower edge of the windscreen is only available in some countries.

Engine number
The engine number is stamped into the crankcase. You can obtain further information from any qualified specialist workshop.

Operating fluids

Notes on operating fluids

WARNING Risk of injury from operating fluids harmful to your health

Operating fluids may be poisonous and harmful to your health.

- Observe the text on the original containers when using, storing or disposing of operating fluids.
- Always store operating fluids sealed in their original containers.
- Always keep children away from operating fluids.

ENVIRONMENTAL NOTE Environmental pollution caused by environmentally irresponsible disposal

- Dispose of operating fluids in an environmentally responsible manner.

Operating fluids include the following:

- fuels
- exhaust gas aftertreatment additives, e.g. AdBlue®
- lubricants
- coolant
- brake fluid
- windscreen washer fluid
- climate control system refrigerant

Only use products recommended by Mercedes-Benz. Damage caused by using vehicle products which have not been recommended is not covered by the Mercedes-Benz guarantee, warranty or goodwill gestures.

You can identify operating fluids approved by Mercedes-Benz by the following inscription on the containers:

- MB-Freigabe (e.g. MB-Freigabe 229.51)
- MB-Approval (e.g. MB-Approval 229.51)

Further information on approved operating fluids:

- In the Mercedes-Benz Specifications for operating fluids at http://bevo.mercedes-benz.com (by entering the designation)
- At a qualified specialist workshop

⚠ WARNING - Risk of fire or explosion caused by fuel

Fuels are highly inflammable.

- ▶ You must avoid fire, naked flames, creating sparks and smoking.
- ▶ Before refuelling, switch off the engine and auxiliary heating if your vehicle is equipped with auxiliary heating.

⚠ WARNING Risk of injury from fuel

Fuels are poisonous and harmful to your health

- ▶ Do not swallow fuel or let it come into contact with skin, eyes or clothing.
- ▶ Do not inhale fuel vapour.
- ▶ Keep children away from fuel.

If you or other people come into contact with fuel, observe the following:

- ▶ Immediately rinse fuel off your skin with soap and water.
- ▶ If fuel comes into contact with your eyes, immediately rinse them thoroughly with clean water. Seek medical attention immediately.
- ▶ If you swallow fuel, seek medical attention immediately. Do not induce vomiting.
- ▶ Change immediately out of clothing that has come into contact with fuel.

Fuel

Information on fuel grades for vehicles with a petrol engine

Observe the notes on operating fluids (→ page 363).

NOTE Damage caused by the wrong fuel

Even small amounts of the wrong fuel could result in damage to the fuel system, the engine and the emission control system.

- Only refuel using premium-grade unleaded fuel that conforms to EN 228, or an equivalent specification.

Fuel of this specification may contain up to 10 % ethanol. Your vehicle is suitable for use with E10 fuel.

Do not refuel using:

- Diesel
- E85, E100
- Petrol containing methanol (M15, M30, M85, M100)
- Petrol with additives containing metal

If you accidentally refuel with the wrong fuel:

- Do not switch the ignition on.
- Consult a qualified specialist workshop.

E 200, E 250, E 400 4MATIC: Observe the information on sulphur content on the information table in the fuel filler flap:



NOTE Damage to the emission control system caused by fuel with a too high sulphur content

- Only use sulphur-free fuel (sulphur content ≤ 10 ppm).

All other models: If the available fuel is not sufficiently low in sulphur, this can produce unpleasant odours.

Recommended fuel: the recommended octane number for your vehicle can be found in the information table in the fuel filler flap (→ page 168).

As a temporary measure, if the recommended fuel is not available, you may also use unleaded regular petrol with an octane number of at least:

- **E 250:** 93 RON
- **All other models:** 91 RON

This may reduce engine output and increase fuel consumption.

Never refuel using petrol with a lower RON.

Further information on fuel can be found:

- At a filling station
- At a qualified specialist workshop

Information on additives in petrol

Observe the notes on operating fluids (→ page 363).

NOTE Damage caused by non-approved additives

Even small amounts of the wrong additive may lead to malfunctions occurring.

- Only add cleaning additives recommended by Mercedes-Benz to the fuel.

Mercedes-Benz recommends that you use fuel brands that have additives.

The fuel grade available in some countries may not be sufficient. Residue could build up in the fuel injection system as a result. In this case, in consultation with a Mercedes-Benz Service Centre, the fuel may be mixed with the cleaning additive recommended by Mercedes-Benz. Always observe the notes and mixing ratios specified on the container.

Information on fuel grades for vehicles with a diesel engine

General notes

Observe the notes on operating fluids (→ page 363).

WARNING Risk of fire through fuel mixture

If you mix diesel fuel with petrol, the flash point of the fuel mixture is lower than that of pure diesel fuel.

While the engine is running, component parts in the exhaust system may overheat unnoticed.

- Never refuel using petrol.
- Never mix diesel fuel with petrol.

NOTE Damage through wrong fuel

Even small amounts of the wrong fuel could result in damage to the fuel system, the engine and the emission control system.

- Only refuel using diesel fuel that conforms to European standard EN 590, or an equivalent specification.
- **Vehicles with diesel particle filters:** in countries outside the EU, only refuel with low-sulphur Euro diesel with a sulphur content of under 50 ppm.

Do not use the following:

- petrol
- marine diesel
- heating oil
- bio-diesel
- vegetable oil
- paraffin
- kerosene

Information on low outside temperatures

Refuel your vehicle with as much winter diesel as possible at the beginning of winter.

Before changing over to winter diesel, the fuel tank should be empty, if possible. When refilling for the first time, keep the fuel level low, for example at reserve level. The fuel tank can be filled as usual at the next refuelling.

Further information on fuel can be found:

- At a filling station.
- At a qualified specialist workshop

Notes on fuel consumption

ENVIRONMENTAL NOTE Increased CO_2 -emissions due to increased fuel consumption

Your vehicle's CO_2 -emissions are directly related to fuel consumption.

- You can minimise your vehicle's CO_2 emissions by driving carefully and having your vehicle serviced regularly.

Only for certain countries: you can find the current consumption and emission values of your vehicle in the COC documents (EU CERTIFICATE OF CONFORMITY). These documents are delivered with your vehicle.
The consumption figures were determined, based on the currently applicable version of the standard:

- Vehicles that comply with standards up to and including the EURO 4 standard: EU Directive RL80/1268/EEC
- Vehicles that comply with or exceed the EURO 5 standard: Regulation (EC) No. 715/2007

Tank capacity and reserve fuel level

The total capacity of the fuel tank may vary, depending on the vehicle equipment.

Filling capacity

Model	Total capacity
E 400 4MATIC	66.0 l or 80.0 l
All other models	50.0 l or 66.0 l
Model	**Of which reserve fuel**
All models	7.0 l

Adblue®

Notes on AdBlue®

Observe the notes on operating fluids (→ page 363).

AdBlue® is a water-soluble fluid for the exhaust gas aftertreatment of diesel engines.

NOTE Damage caused by diluting or mixing additives with AdBlue®

Diluting or mixing additives with AdBlue® can destroy the BlueTEC exhaust gas aftertreatment system.

- Only use AdBlue® in accordance with ISO 22241.
- Do not use additives.
- Do not dilute AdBlue®.

NOTE Damage and malfunctions due to impurities in AdBlue®

Impurities in AdBlue® lead to:

- Increased emissions values
- Damage to the catalytic converter
- Engine damage
- BlueTEC exhaust gas aftertreatment malfunctions

▶ Avoid impurities in AdBlue®.

ENVIRONMENTAL NOTE Contamination caused by AdBlue®

AdBlue® residues crystallise after a period of time, and contaminate the surfaces with which they come into contact.

▶ Surfaces that have come into contact with AdBlue® while refilling must be immediately rinsed with water, or AdBlue® must be removed with a damp cloth and cold water.

If AdBlue® has already crystallised, clean it with a sponge and cold water.

When you open the AdBlue® tank, small amounts of ammonia vapour may escape. Do not inhale any ammonia vapours that may be released. Only fill the AdBlue® tank in well-ventilated areas.

AdBlue® filling capacity

Total capacity of AdBlue® tank

Model	Total capacity
All models	23.5 l

Engine oil

Notes on engine oil
Observe the notes on operating fluids (→ page 363).



NOTE Engine damage caused by an incorrect oil filter, incorrect oil or additives

▶ Do not use engine oils or oil filters which do not correspond to the specifications explicitly prescribed for the service intervals.

▶ Do not alter the engine oil or oil filter in order to achieve longer change intervals than prescribed.

▶ Do not use additives.

▶ Have the engine oil renewed at regular intervals.

Mercedes-Benz recommends that you have the oil change carried out at a qualified specialist workshop.

Only Mercedes-Benz approved engine oils may be used in Mercedes-Benz engines.

Further information on engine oils and oil filters:

- In the Mercedes-Benz Specifications for operating fluids at http://bevo.mercedes-benz.com (by entering the designation)
- At a qualified specialist workshop

Petrol engines: For certain countries, different engine oils can be used in conjunction with reduced maintenance intervals. For more information, please contact a qualified specialist workshop.

Quality and filling capacity of engine oil

MB-Freigabe or MB-Approval

Petrol engines	MB-Freigabe or MB-Approval
All models	229.5, 229.6

MB-Freigabe or MB-Approval

Diesel engines	MB-Freigabe or MB-Approval
E 350 d	228.51, 229.31, 229.51, 229.52
All other models	228.51, 229.31, 229.51, 229.52, 229.71

If the engine oils listed in the table are not available, you may add a maximum of 1.0 l of the following engine oils once only:

- **Petrol engines:** MB-Freigabe or MB-Approval 229.3 or ACEA A3/B3
- **Diesel engines:** MB-Freigabe or MB-Approval 229.3, 229.5 or ACEA C3

The following values refer to an oil change, including the oil filter:

Replacement amount

Model	Replacement amount
E 200 E 250	7.0 l
E 200 4MATIC E 400 4MATIC	6.5 l
E 350 d	9.0 l
All other models	6.3 l

Notes on brake fluid

Observe the notes on operating fluids (→ page 363).

WARNING Risk of an accident due to vapour pockets forming in the brake system

The brake fluid constantly absorbs moisture from the air. This lowers the boiling point of

the brake fluid. If the boiling point is too low, vapour pockets may form in the brake system when the brakes are applied hard.

This impairs the braking effect.

▶ Have the brake fluid renewed at the specified intervals.

Have the brake fluid regularly changed at a qualified specialist workshop.

Only use brake fluid approved by Mercedes-Benz according to MB-Freigabe or MB-Approval 331.0.

Further information on brake fluid:

- In the Mercedes-Benz Specifications for Operating Fluids at http://bevo.mercedes-benz.com
- At a qualified specialist workshop

Coolant

Notes on coolant

Observe the notes on operating fluids (→ page 363).

⚠ WARNING Risk of fire- and injury from antifreeze

If antifreeze comes into contact with hot component parts in the engine compartment, it may ignite.

▶ Allow the engine to cool down before you top up the antifreeze.

▶ Make sure that no antifreeze spills out next to the filler opening.

▶ Thoroughly clean the antifreeze from component parts before starting the vehicle.

! NOTE Damage caused by incorrect coolant

▶ Only add coolant that has been premixed with the required antifreeze protection.

Further information on coolant:

- In the Mercedes-Benz Specifications for Operating Fluids 310.1, e.g. online at http://bevo.mercedes-benz.com.
- At a qualified specialist workshop.

! NOTE Overheating at high outside temperatures

If an inappropriate coolant is used, the engine cooling system is not sufficiently protected against overheating and corrosion at high outside temperatures.

▶ Always use an appropriate coolant.

Have the coolant regularly changed at a qualified specialist workshop.

The proportion of corrosion inhibitor/ antifreeze concentrate in the engine cooling system should be:

- A minimum of 50% (antifreeze protection down to approximately -37 °C).

- A maximum of 55% (antifreeze protection down to -45 °C).

Notes on windscreen washer fluid

Observe the notes on operating fluids (→ page 363).

⚠ WARNING - Risk of fire and injury due to windscreen washer concentrate

Windscreen washer concentrate is highly flammable. It could ignite if it comes into contact with hot engine component parts or the exhaust system.

▶ Make sure that no windscreen washer concentrate spills out next to the filler opening.

! NOTE Damage to the exterior lighting due to unsuitable windscreen washer fluid

Unsuitable windscreen washer fluids may damage the plastic surface of the exterior lighting.

▶ Only use windscreen washer fluids which are also suitable for use on plastic surfaces, e.g. MB SummerFit or MB WinterFit.

! NOTE Blocked spray nozzles caused by mixing windscreen washer fluids

▶ Do not mix MB SummerFit and MB WinterFit with other windscreen washer fluids.

Do not use distilled or de-ionised water as the fill level sensor may be triggered erroneously.

Recommended windscreen washer fluid:

- Above freezing point: e.g. MB SummerFit
- Below freezing point: e.g. MB WinterFit

For the correct mixing ratio refer to the information on the antifreeze reservoir.

Mix the washer fluid with the windscreen washer fluid all year round.

Vehicle data

Vehicle dimensions

The heights specified may vary as a result of the:

- tyres
- load
- condition of the suspension
- optional equipment

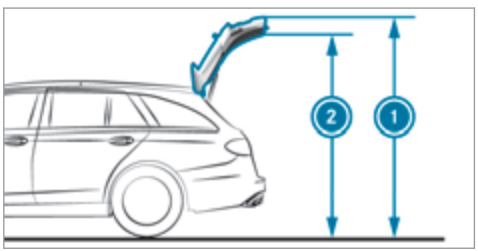

Opening height

Model	① Opening height	② Headroom
E 400 4MATIC	2061 mm	1937 mm
E 200 4MATIC E 220 d 4MATIC	2076 mm	1950 mm
E 220 d 4MATIC All-Terrain	2098 mm	1972 mm
All other models	2070 mm	1944 mm

Vehicle dimensions

E 220 d 4MATIC All-Terrain	
Vehicle length	4947 mm
Vehicle width including outside mirrors	2065 mm
Vehicle width excluding outside mirrors	1861 mm

E 220 d 4MATIC All-Terrain	
Vehicle height	1497 mm
Wheelbase	2939 mm
All other models	
Vehicle length	4933 mm
Vehicle width including outside mirrors	2065 mm
Vehicle width excluding outside mirrors	1852 mm
Wheelbase	2939 mm

Models	Vehicle height
E 400 4MATIC	1466 mm
E 200 4MATIC E 220 d 4MATIC	1481 mm
All other models	1475 mm

Weights and loads

Please note that for the specified vehicle data:

- items of optional equipment increase the unladen weight and reduce the maximum payload.
- vehicle-specific weight information can be found on the vehicle identification plate .

Roof load

All models	
Maximum roof load	100 kg

Trailer hitch

General notes on the trailer hitch

Not all models can be used to tow a trailer (→ page 237).

Modifications to the engine cooling system may be necessary, depending on the vehicle model. The retrofitting of a trailer hitch is only permissible if a towing capacity is specified in your vehicle documents.

Further information on the trailer hitch can be obtained at a qualified specialist workshop.

Permissible towing capacity

Permissible towing capacity, braked (at a minimum start-off gradeability of 8% from a standstill)

Model	Manual transmission	Automatic transmission
E 200	1500 kg	2100 kg
All other models	–	2100 kg

Permissible towing capacity, braked (at a minimum start-off gradeability of 12%) from a standstill)

Model	Manual transmission	Automatic transmission
E 200	1500 kg	2100 kg
All other models	–	2100 kg

Permissible towing capacity, unbraked

Model	Permissible towing capacity, unbraked
All models	750 kg

Maximum tongue weight

NOTE Damage caused by the trailer coming loose

If the tongue weight used is too low, the trailer may come loose.

- The tongue weight must not be below 50 kg.
- Use a tongue weight that is as close as possible to the maximum permissible tongue weight.

Tongue weight

Model	Maximum tongue weight
All models	84 kg

Permissible rear axle load during trailer operation

Axle load

Model	Axle load
E 200 4MATIC E 200, manual transmission	1450 kg
E 200, automatic transmission	1455 kg

Model	Axle load
E 250	1460 kg
E 200 d	1480 kg
E 350 d E 400 4MATIC	1495 kg
E 220 d 4MATIC All-Terrain	1530 kg
All other models	1485 kg

Display messages

Introduction

Notes on display messages

Display messages appear in the multifunction display.

Display messages with graphic symbols are simplified in the Owner's Manual and may differ from the symbols in the multifunction display. The multifunction display shows high-priority display messages in red. Certain display messages are accompanied by a warning tone.

Please respond in accordance with the display messages and follow the additional notes in this Owner's Manual.

You can hide low-priority display messages by pressing the ⮌ button or the left-hand Touch Control. The display messages are then stored in the message memory. Rectify the cause of a display message as quickly as possible.

High-priority display messages cannot be hidden. The multifunction display shows these messages continuously until the cause for the message has been rectified.

Calling up stored display messages

On-board computer:

↳ Service ⏩ 1 message

If there are no display messages, No messages appears in the multifunction display.

- Scroll through the display messages by swiping upwards or downwards on Touch Control on the left-hand side of the steering wheel.
- **To exit the message memory:** press the ⮌ button.

Safety systems

Display messages	Possible causes/consequences and ▶ Solutions
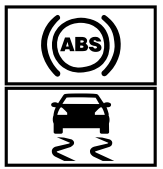 currently unavailable See Owner's Manual	* ABS and ESP® are temporarily unavailable. Other driving and driving safety systems may also be faulty. **⚠ WARNING** Risk of skidding if ABS and ESP® are malfunctioning If ABS and ESP® are malfunctioning, the wheels could lock when braking and ESP® cannot carry out vehicle stabilisation. The steering capability and braking characteristics are thus severely impaired. The braking distance may increase in an emergency braking situation. In addition, other driving safety systems are switched off. ▶ Drive on carefully. ▶ Have ABS and ESP® checked immediately at a qualified specialist workshop. ▶ Carefully drive on a suitable stretch of road, making slight steering movements at a speed above 30 km/h. ▶ If the display message does not disappear, consult a qualified specialist workshop immediately. Drive carefully.

Display messages	Possible causes/consequences and ▶ Solutions
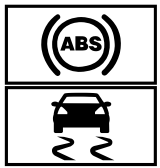 inoperative See Owner's Manual	* ABS and ESP® are malfunctioning. Other driving and driving safety systems may also be faulty. **⚠ WARNING** Risk of skidding if ABS and ESP® are malfunctioning If ABS and ESP® are malfunctioning, the wheels could lock when braking and ESP® cannot carry out vehicle stabilisation. The steering capability and braking characteristics are thus severely impaired. The braking distance may increase in an emergency braking situation. In addition, other driving safety systems are switched off. ▶ Drive on carefully. ▶ Have ABS and ESP® checked immediately at a qualified specialist workshop. ▶ Drive on carefully. ▶ Consult a qualified specialist workshop immediately.

Display messages	Possible causes/consequences and ▶ Solutions
 currently unavailable See Owner's Manual	* ESP® is temporarily unavailable. Other driving and driving safety systems may also be faulty. **⚠ WARNING** Risk of skidding if ESP® is malfunctioning If ESP® is malfunctioning, ESP® cannot carry out vehicle stabilisation. In addition, other driving safety systems are switched off. ▶ Drive on carefully. ▶ Have ESP® checked at a qualified specialist workshop. ▶ Carefully drive on a suitable stretch of road, making slight steering movements at a speed above 30 km/h. ▶ If the display message does not disappear, consult a qualified specialist workshop immediately. Drive carefully.

Display messages	Possible causes/consequences and ▶ Solutions
 inoperative See Owner's Manual	* ESP® is malfunctioning. Other driving and driving safety systems may also be faulty. The brake system continues to operate normally. The braking distance may increase in an emergency braking situation. **⚠ WARNING** Risk of skidding if ESP® is malfunctioning If ESP® is malfunctioning, ESP® cannot carry out vehicle stabilisation. In addition, other driving safety systems are switched off. ▶ Drive on carefully. ▶ Have ESP® checked at a qualified specialist workshop. ▶ Drive on carefully. ▶ Consult a qualified specialist workshop immediately.

Display messages	Possible causes/consequences and ▶ Solutions
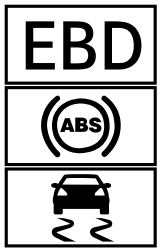 inoperative See Owner's Manual	* EBD, ABS and ESP® are malfunctioning. Other driving and driving safety systems may also be faulty. **⚠ WARNING** Risk of skidding if EBD, ABS and ESP® are malfunctioning If EBD, ABS and ESP® are malfunctioning, the wheels can lock when braking and ESP® cannot carry out vehicle stabilisation. The steering capability and braking characteristics are thus severely impaired. The braking distance may increase in an emergency braking situation. In addition, other driving safety systems are switched off. ▶ Drive on carefully. ▶ Have the brake system checked immediately at a qualified specialist workshop. ▶ Drive on carefully. ▶ Consult a qualified specialist workshop immediately.
 Turn on the ignition to release the parking brake	* The red (P) indicator lamp is lit. You have attempted to release the electric parking brake with the ignition switched off. ▶ Switch the ignition on.

Display messages	Possible causes/consequences and ▶ Solutions
 Release parking brake	* The red (P) indicator lamp flashes. The electric parking brake is applied while driving: • A condition for automatic release of the electric parking brake is not fulfilled . • You are performing emergency braking using the electric parking brake . ▶ Check that the conditions for automatic release of the electric parking brake are fulfilled. ▶ Release the electric parking brake manually.

Display messages	Possible causes/consequences and ▶ Solutions
 Parking brake See Owner's Manual	* The yellow (P) indicator lamp is lit. The electric parking brake is malfunctioning. **To apply:** ▶ Switch off the ignition and turn it back on. ▶ Apply the electric parking brake manually . If it is not possible to apply the electric parking brake: ▶ Consult a qualified specialist workshop. ▶ Where necessary, also safeguard the parked vehicle against rolling away. The yellow (P) indicator lamp and the red (P) indicator lamp are lit. The electric parking brake is malfunctioning. **To release:** ▶ Switch off the ignition and turn it back on. ▶ Release the electric parking brake manually . or ▶ Release the electric parking brake automatically . If it is still not possible to release the electric parking brake: ▶ Do not continue driving under any circumstances. Consult a qualified specialist workshop. The yellow (P) indicator lamp is lit and the red (P) indicator lamp is flashing. The electric parking brake is malfunctioning. The electric parking brake could not be applied or released.

Display messages	Possible causes/consequences and ▶ Solutions
	▶ Switch off the ignition and turn it back on. **To apply:** ▶ Release and then apply the electric parking brake manually . **To release:** ▶ Apply and then release the electric parking brake manually. If it is not possible to apply the electric parking brake or the red (P) indicator lamp continues to flash: ▶ Do not continue driving under any circumstances. Consult a qualified specialist workshop. ▶ Where necessary, also safeguard the parked vehicle against rolling away. The yellow (P) indicator lamp is lit and the red (P) indicator lamp flashes for approximately ten seconds after the electric parking brake has been applied or released. It then remains lit or goes out. The electric parking brake is malfunctioning. **If the battery charge level is too low:** ▶ Charge the battery. **To apply:** ▶ Switch the ignition off. The electric parking brake is applied automatically.

Display messages	Possible causes/consequences and ▶ Solutions
	If you do not wish the electric parking brake to be applied, leave the ignition switched on, e.g. when washing the vehicle in an automatic car wash or when having the vehicle towed away. Do not do this when having the vehicle towed with the rear axle raised. If the electric parking brake is not applied automatically: ▶ Switch off the ignition and turn it back on. ▶ Release and then apply the electric parking brake manually . If it is still not possible to apply the electric parking brake: ▶ Consult a qualified specialist workshop. ▶ Where necessary, also safeguard the parked vehicle against rolling away. **To release:** ▶ If the conditions for automatic release are fulfilled and the electric parking brake is not released automatically, release the electric parking brake manually . If it is still not possible to release the electric parking brake: ▶ Do not continue driving under any circumstances. Consult a qualified specialist workshop.

Display messages	Possible causes/consequences and ▶ Solutions
Brake immediately	* **Vehicles with manual transmission:** a malfunction has occurred while the HOLD function was activated. A tone may also sound at regular intervals. If you attempt to lock the vehicle, the tone becomes louder. You cannot start the engine. ▶ Immediately depress the brake pedal firmly until the display message disappears. You can restart the engine.
 Check brake fluid level	* There is insufficient brake fluid in the brake fluid reservoir. **⚠ WARNING** Risk of an accident due to low brake fluid level If the brake fluid level is too low, the braking effect and the braking characteristics may be impaired. ▶ Pull over and stop the vehicle safely as soon as possible, paying attention to road and traffic conditions. Do not continue driving under any circumstances. ▶ Consult a qualified specialist workshop. Do not top up the brake fluid. ▶ Pull over and stop the vehicle safely as soon as possible, paying attention to road and traffic conditions. Do not continue driving under any circumstances. ▶ Consult a qualified specialist workshop. Do not top up the brake fluid.

Display messages	Possible causes/consequences and ▶ Solutions
 Check brake pad wear	* The brake linings have reached the wear limit. ▶ Consult a qualified specialist workshop.
Active Brake Assist Functions currently limited See Owner's Manual	* **Vehicles with Driving Assistance Package:** Active Brake Assist with cross-traffic function, Evasive Steering Assist or PRE-SAFE® PLUS are temporarily unavailable or only partially available. **Vehicles without the Driving Assistance package:** Active Brake Assist is temporarily unavailable. The ambient conditions are outside the system borders . ▶ Drive on. As soon as the ambient conditions are within the system borders, the system will become available again. ▶ If the display message does not disappear, stop the vehicle while paying attention to road and traffic conditions and restart the engine.
Active Brake Assist Functions limited See Owner's Manual	* **Vehicles with Driving Assistance Package:** Active Brake Assist with cross-traffic function, Evasive Steering Assist or PRE-SAFE® PLUS is malfunctioning. **Vehicles without the Driving Assistance Package:** Active Brake Assist is malfunctioning. ▶ Consult a qualified specialist workshop.
PRE-SAFE inoperative See Owner's Manual	* PRE-SAFE® functions are malfunctioning. ▶ Consult a qualified specialist workshop.

Display messages	Possible causes/consequences and ▶ Solutions
PRE-SAFE impulse side inoperative See Owner's Manual	* Side PRE-SAFE® Impulse is malfunctioning or inoperative after having already been triggered. ▶ Consult a qualified specialist workshop.
Radar sensors dirty See Owner's Manual	* The radar sensor system is malfunctioning. Possible causes: • soiling of the sensors • heavy rain • extended driving on inter-urban roads without moving traffic, e.g. in the desert Driving systems and driving safety systems may be malfunctioning or temporarily unavailable. When the causes no longer apply, driving systems and driving safety systems are available again. If the display message does not disappear: ▶ Pull over and stop the vehicle safely as soon as possible, paying attention to road and traffic conditions. ▶ Clean all sensors . ▶ Restart the engine.

Display messages	Possible causes/consequences and ▶ Solutions
 Restraint sys. malfunction Consult workshop	* The restraint system is faulty (→ page 27). **⚠ WARNING** Risk of injury or fatal injury due to a malfunction in the restraint system If the restraint system is malfunctioning, restraint system components may be triggered unintentionally or might not be triggered at all in the event of an accident. This may affect the seat belt tensioner or airbag, for example. ▶ Have the restraint system checked and repaired immediately at a qualified specialist workshop. Recognising a restraint system malfunction • The restraint system warning lamp does not light up when the ignition is switched on. • The restraint system warning lamp lights up continuously or repeatedly during a journey. ▶ Consult a qualified specialist workshop immediately.

Display messages	Possible causes/consequences and ▶ Solutions
 Example:Front left malfunction Consult workshop	* The corresponding restraint system is malfunctioning (→ page 27). **⚠ WARNING** Risk of injury or fatal injury due to a malfunction in the restraint system If the restraint system is malfunctioning, restraint system components may be triggered unintentionally or might not be triggered at all in the event of an accident. This may affect the seat belt tensioner or airbag, for example. ▶ Have the restraint system checked and repaired immediately at a qualified specialist workshop. Recognising a restraint system malfunction • The restraint system warning lamp does not light up when the ignition is switched on. • The restraint system warning lamp lights up continuously or repeatedly during a journey. ▶ Consult a qualified specialist workshop immediately.
 Example:Left windowbag malfunction Consult workshop	* The corresponding window airbag is malfunctioning (→ page 32). **⚠ WARNING** Risk of injury or fatal injury due to a malfunction in the window airbag The window airbag might be triggered unintentionally or might not be triggered at all in the event of an accident with high deceleration. ▶ Have the window airbag checked and repaired immediately at a qualified specialist workshop. ▶ Consult a qualified specialist workshop immediately.

Display messages	Possible causes/consequences and ▶ Solutions
 Inoperative	* One or more main functions of the Mercedes me connect system is/are malfunctioning. ▶ Consult a qualified specialist workshop.
Front-passenger airbag disabled See Owner's Manual	* The front passenger airbag is disabled, even though an adult or a person with a build corresponding to that of an adult is seated on the front passenger seat. If additional forces are applied to the seat, the weight the system detects may be too low. **⚠ WARNING** - Risk of injury or even fatal injury when the front passenger airbag is disabled If the front passenger airbag is disabled, It will not be deployed in the event of an accident and cannot perform its intended protective function. A person in the front passenger seat could then, for example, come into contact with the vehicle interior, especially if the person is sitting too close to the dashboard. ▶ Be aware of the status of the front passenger airbag both before and during the journey. ▶ Pull over and stop the vehicle safely as soon as possible, paying attention to road and traffic conditions. ▶ Check the status of the automatic front passenger airbag shutoff . ▶ If necessary, consult a qualified specialist workshop immediately.

Display messages	Possible causes/consequences and ▶ Solutions
Front-passenger airbag enabled See Owner's Manual	* The front passenger airbag is enabled while the vehicle is in motion: • Even when a child, a small adult or an object weighing less than the system weight threshold is located on the front passenger seat. • Even when the front passenger seat is not occupied. The system may detect objects or forces that are adding to the weight applied to the seat. ⚠ **WARNING** - Risk of injury or even fatal injury from using a child restraint system when the front passenger airbag is enabled If you secure a child in a child restraint system on the front passenger seat and the front passenger airbag is enabled, the front passenger airbag can deploy in the event of an accident. The child could be struck by the airbag. ▶ Be aware of the status of the front passenger airbag both before and during the journey. ▶ Pull over and stop the vehicle safely as soon as possible, paying attention to road and traffic conditions. ▶ Check the status of the automatic front passenger airbag shutoff . ▶ If necessary, consult a qualified specialist workshop immediately.

Driving systems

Display messages	Possible causes/consequences and ▶ Solutions
 ATTENTION ASSIST: Take a break!	* ATTENTION ASSIST has detected fatigue or an increasing lack of concentration on the part of the driver (→ page 230). ▶ If necessary, take a break.
 ATTENTION ASSIST inoperative	* ATTENTION ASSIST is malfunctioning. ▶ Consult a qualified specialist workshop.
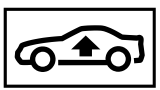 Vehicle rising	* Your vehicle is adjusting to the level you have selected.
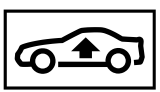 Vehicle rising Please wait	* The vehicle level is too low and the vehicle rises to the selected vehicle level. ▶ Wait until the display message disappears before pulling away.

Display messages	Possible causes/consequences and ▶ Solutions
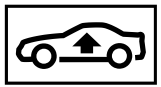 Malfunction See Owner's Manual	* The AIR BODY CONTROL function is restricted. The vehicle's handling characteristics may be affected. ▶ Drive in a manner appropriate for the current level, but do not exceed 80 km/h. ▶ Consult a qualified specialist workshop. DYNAMIC BODY CONTROL is malfunctioning. The vehicle's handling characteristics may be affected. ▶ Do not drive faster than 80 km/h. ▶ Consult a qualified specialist workshop.

Display messages	Possible causes/consequences and ▶ Solutions
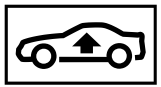 Stop vehicle Vehicle too low	* You have pulled away although the vehicle level was too low. ▶ Pull over and stop the vehicle safely as soon as possible, paying attention to road and traffic conditions. The vehicle rises to the selected vehicle level. ▶ Wait until the display message disappears before pulling away. If the display message does not disappear and a warning tone also sounds, AIR BODY CONTROL is malfunctioning: ▶ Do not drive faster than 80 km/h and consult a qualified specialist workshop immediately. ! **NOTE** The tyres of the front axle or the front wings could be damaged by large steering movements ▶ Avoid large steering movements while driving and listen for scraping sounds. ▶ If you hear scraping sounds, pull over and stop the vehicle safely, paying attention to road and traffic conditions, and set a higher vehicle level if possible. ▶ Set a higher vehicle level . Depending on the malfunction, the vehicle is raised.
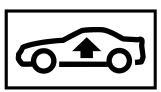 Please reduce speed	* You are driving too fast for the selected vehicle level. ▶ In order to adjust the vehicle level, you must not drive faster than 80 km/h. ▶ In order to adjust the vehicle level during trailer operation, you must not drive faster than 30 km/h.

Display messages	Possible causes/consequences and ▶ Solutions
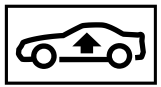 Compressor is cooling	* Due to frequent level changes within a short space of time, the compressor first needs to cool down in order to set the selected vehicle level. ▶ Drive on in a manner appropriate for the current level. Make sure that there is sufficient ground clearance. When the compressor has cooled down, the vehicle continues rising to the selected vehicle level.
max. speed 22 mph	* **All-Terrain vehicles:** the white display message notifies you not to drive faster than 35 km/h in the AT (AllTerrain) vehicle level. If the display message is red, you are driving too fast for the AT (AllTerrain) vehicle level. ▶ Do not drive faster than 35 km/h in the AT (AllTerrain) vehicle level.
Please reduce speed	* **All-Terrain vehicles:** you are driving too fast for the selected vehicle level. ▶ In order to adjust the vehicle level, you must not drive faster than 35 km/h. ▶ In order to adjust the vehicle level during trailer operation, you must not drive faster than 30 km/h.

Display messages	Possible causes/consequences and ▶ Solutions
Active Lane Keeping Assist currently unavailable See Owner's Manual	* Active Lane keeping Assist is temporarily unavailable. The ambient conditions are outside the system borders (→ page 233). **Vehicles with Steering Pilot:** the camera view may be restricted by the windscreen. ▶ Drive on. As soon as the ambient conditions are within the system borders, the system will become available again. If the display message does not disappear on vehicles with Steering Pilot: ▶ Pull over and stop the vehicle safely as soon as possible, paying attention to road and traffic conditions. ▶ Clean the windscreen.
Active Lane Keeping Assist inoperative	* Active Lane Keeping Assist is malfunctioning. ▶ Consult a qualified specialist workshop.

Display messages	Possible causes/consequences and ▶ Solutions
Active Lane Keeping Assist Camera view restricted See Owner's Manual	* **Vehicles without Steering Pilot:** the camera view is reduced. Possible causes: • dirt on the windscreen in the camera's field of vision • heavy rain, snow or fog Driving systems and driving safety systems may be malfunctioning or temporarily unavailable. When the causes no longer apply, driving systems and driving safety systems are available again. If the display message does not disappear: ▶ Pull over and stop the vehicle safely as soon as possible, paying attention to road and traffic conditions. ▶ Clean the windscreen.
Blind Spot Assist currently unavailable See Owner's Manual	* Blind Spot Assist is temporarily unavailable. The system borders have been reached (→ page 231). ▶ Drive on. When the causes no longer apply, the system will be available again. or ▶ If the display message does not disappear, stop the vehicle while paying attention to road and traffic conditions and restart the engine. ▶ If necessary, clean the rear bumper. If the bumper is extremely dirty, the sensors in the bumper may be malfunctioning.

Display messages	Possible causes/consequences and ▶ Solutions
Active Blind Spot Assist currently unavailable See Owner's Manual	* Active Blind Spot Assist is temporarily unavailable. The system borders have been reached (→ page 231). ▶ Drive on. When the causes no longer apply, the system will be available again. ▶ If the display message does not disappear, stop the vehicle while paying attention to road and traffic conditions and restart the engine.
Blind Spot Assist inoperative	* Blind Spot Assist is malfunctioning. ▶ Consult a qualified specialist workshop.
Active Blind Spot Assist inoperative	* Active Blind Spot Assist is malfunctioning. ▶ Consult a qualified specialist workshop.
Example:Parking Pilot Parking cancelled	* The parking assistance systems of Parking Pilot were interrupted. You have opened the driver's door or touched the steering wheel, for example. ▶ Steer and brake manually.
HOLD Off	* The HOLD function is deactivated because the vehicle is skidding or a condition for activation is not met. ▶ Reactivate the HOLD function later or check the activation conditions for the HOLD function .
Distance Pilot available again	* Distance Pilot DISTRONIC is operational again and can be activated (→ page 199).

Display messages	Possible causes/consequences and ▶ Solutions
Distance Pilot currently unavailable See Owner's Manual	* Distance Pilot DISTRONIC is temporarily unavailable. The ambient conditions are outside the system borders (→ page 196). ▶ Drive on. As soon as the ambient conditions are within the system borders, the system will become available again.
Distance Pilot inoperative	* Distance Pilot DISTRONIC is malfunctioning. Other driving and driving safety systems may also be faulty. ▶ Consult a qualified specialist workshop.
Steering Pilot currently unavailable See Owner's Manual	* Steering Pilot is temporarily unavailable. The ambient conditions are outside the system borders (→ page 202). ▶ Drive on. As soon as the ambient conditions are within the system borders, the system will become available again. ▶ If necessary, clean the windscreen in the camera's field of vision.
Steering Pilot inoperative	* Steering Pilot is malfunctioning. Distance Pilot DISTRONIC remains available. ▶ Consult a qualified specialist workshop.
Limiter passive	* If you depress the accelerator pedal beyond the pressure point (kickdown), the limiter is switched to passive mode (→ page 194).
 --- km/h	* Cruise control cannot be activated as not all activation conditions are fulfilled. ▶ Observe the activation conditions for cruise control .

Display messages	Possible causes/consequences and ▶ Solutions
Cruise control off	* Cruise control has been deactivated. If there is an additional warning tone, cruise control has been deactivated automatically (→ page 193).
Cruise control and Limiter inoperative	* Cruise control and the limiter are malfunctioning. ▶ Consult a qualified specialist workshop.
Limiter inoperative	* The limiter is malfunctioning. ▶ Consult a qualified specialist workshop.
LIM --- km/h	* The limiter cannot be activated as not all activation conditions have been fulfilled. ▶ Observe the activation conditions of the limiter .
Speed limit (winter tyres) XXX km/h	* You have reached the stored maximum speed for winter tyres. It is not possible to exceed this speed.
120 km/h! Maximum speed exceeded	* The maximum permissible speed has been exceeded (only for certain countries). ▶ Drive more slowly.
Blind Spot Assist not available when towing a trailer See Owner's Manual	* When you establish the electrical connection to the trailer, Blind Spot Assist is unavailable. ▶ Press the left-hand Touch Control and confirm the display message.

Display messages	Possible causes/consequences and ▶ Solutions
Active Blind Spot Assist not available when towing a trailer See Owner's Manual	* When you establish the electrical connection to the trailer, Active Blind Spot Assist is unavailable. ▶ Press the left-hand Touch Control and confirm the display message.
Cruise control inoperative	* Cruise control is malfunctioning. ▶ Consult a qualified specialist workshop.
Parking Pilot Manoeuvring assistance limited See Owner's Manual	* Parking Pilot and Parking Assist PARKTRONIC are temporarily unavailable. The ambient conditions are outside the system borders (→ page 219). Beware of the entire vehicle surroundings. ▶ As soon as the ambient conditions are within the system borders, the system will become available again.
Parking Pilot and PARKTRONIC inoperative See Owner's Manual	* Parking Pilot and Parking Assist PARKTRONIC are malfunctioning. ▶ Stop the vehicle, paying attention to road and traffic conditions, and restart the engine. ▶ If the display message continues to be displayed, consult a qualified specialist workshop.

Engine

Display messages	Possible causes/consequences and ▶ Solutions
Top up coolant See Owner's Manual	* The coolant level is too low. **! NOTE** Engine damage due to insufficient coolant ▶ Avoid long journeys with insufficient coolant. ▶ Add coolant .
	* The fan motor is faulty. ▶ Avoiding high loads on the engine, drive on to the nearest qualified specialist workshop. In doing so, ensure that the coolant temperature display remains below 120 °C.

Display messages	Possible causes/consequences and ▶ Solutions
 Coolant Stop vehicle Switch engine off	* The coolant is too hot. ▶ Stop the vehicle immediately, paying attention to road and traffic conditions, and switch off the engine. ⚠ **WARNING** Danger of burns when opening the bonnet If you open the engine bonnet when the engine has overheated or during a fire in the engine compartment, you could come into contact with hot gases or other escaping operating fluids. ▶ Before opening the bonnet, allow the engine to cool down. ▶ In the event of a fire in the engine compartment, keep the engine bonnet closed and call the fire service. ▶ Wait until the engine has cooled down. ▶ Make sure that the air supply to the radiator is not obstructed. ▶ Avoiding high loads on the engine, drive on to the nearest qualified specialist workshop. In doing so, ensure that the coolant temperature display remains below 120 °C.

Display messages	Possible causes/consequences and ▶ Solutions
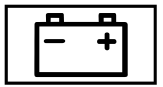 See Owner's Manual	* The battery is not being charged. **! NOTE** Possible engine damage if you continue driving ▶ Do not continue driving under any circumstances. ▶ Consult a qualified specialist workshop. ▶ Stop the vehicle immediately, paying attention to road and traffic conditions, and switch off the engine. ▶ Consult a qualified specialist workshop.
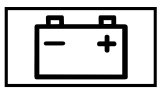 Stop vehicle See Owner's Manual	* The battery is no longer being charged and the battery charge level is too low. **! NOTE** Possible engine damage if you continue driving ▶ Do not continue driving under any circumstances. ▶ Consult a qualified specialist workshop. ▶ Pull over and stop the vehicle safely as soon as possible, paying attention to road and traffic conditions. Do not continue driving under any circumstances. ▶ Switch off the engine. ▶ Consult a qualified specialist workshop.

Display messages	Possible causes/consequences and ▶ Solutions
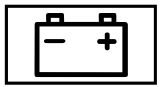 Stop vehicle Leave engine running	* The battery charge level is too low. ▶ Pull over and stop the vehicle safely as soon as possible, paying attention to road and traffic conditions. Do not continue driving under any circumstances. ▶ Start the engine. ▶ Wait until the display message disappears before pulling away.
 Check eng. oil lev. when next refuelling	* The engine oil level has dropped to the minimum level. ! **NOTE** Engine damage caused by driving with insufficient engine oil ▶ Avoid long journeys with insufficient engine oil. ▶ Check the engine oil level when next refuelling. Top up the engine oil (→ page 307). Notes on engine oil (→ page 368).

Display messages	Possible causes/consequences and ▶ Solutions
 Engine oil level Stop vehicle Switch engine off	* Display message only with certain engines: The engine oil level is too low. **! NOTE** Engine damage caused by driving with insufficient engine oil ▶ Avoid long journeys with insufficient engine oil. ▶ Pull over and stop the vehicle safely as soon as possible, paying attention to road and traffic conditions. Do not continue driving under any circumstances. ▶ Switch off the engine. ▶ Check the engine oil level. Top up the engine oil (→ page 307). Notes on engine oil (→ page 368).
 Engine oil level Reduce oil level	* Display message only with certain engines: The engine oil level is too high. **! NOTE** Engine damage caused by driving with excess engine oil ▶ Avoid long journeys with excess engine oil. ▶ Consult a qualified specialist workshop immediately and have engine oil siphoned off.

Display messages	Possible causes/consequences and ▶ Solutions
 Add 1 litre engine oil when next refuelling	* Display message only with certain engines: The engine oil level has dropped to the minimum level. **! NOTE** Engine damage caused by driving with insufficient engine oil ▶ Avoid long journeys with insufficient engine oil. ▶ Check the engine oil level when next refuelling. Top up the engine oil (→ page 307). Notes on engine oil (→ page 368).
 Engine oil pressure Stop Switch off engine	* Display message only with certain engines: The engine oil pressure is too low. **! NOTE** Engine damage caused by driving with insufficient engine oil pressure ▶ Avoid long journeys with insufficient engine oil pressure. ▶ Pull over and stop the vehicle safely as soon as possible, paying attention to road and traffic conditions. Do not continue driving under any circumstances. ▶ Consult a qualified specialist workshop.

Display messages	Possible causes/consequences and ▶ Solutions
 Engine oil level cannot be measured	* The electrical connection to the oil level sensor is interrupted or the oil level sensor is faulty. The engine oil level has dropped to the minimum level. ▶ Consult a qualified specialist workshop.
 Refill AdBlue See Owner's Manual	* The AdBlue® level has fallen below the reserve range. ▶ Refill AdBlue® immediately .
 Refill AdBlue Eng. start not possible	* The AdBlue® tank is empty. You can no longer start the engine. ▶ Top up at least 4.0 l of AdBlue® . ▶ Switch the ignition on. You can restart the engine after approximately one minute.
 Check AdBlue See Owner's Manual	* The AdBlue® system is malfunctioning. ▶ Consult a qualified specialist workshop.

Display messages	Possible causes/consequences and ▶ Solutions
 Reserve fuel level	* The fuel level has dropped into the reserve range. ▶ Refuel.
 Eng. start not possible in XXX km	* The AdBlue® system is malfunctioning. ▶ Consult a qualified specialist workshop immediately.
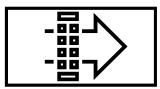 Replace air cleaner	* **Vehicles with a diesel engine:** the engine air filter is dirty and must be replaced. ▶ Consult a qualified specialist workshop.
 Eng. start not possible	* The AdBlue® system is malfunctioning. You can no longer start the engine. ▶ Consult a qualified specialist workshop immediately.

Display messages	Possible causes/consequences and ▶ Solutions
 Refill AdBlue No start in XXX km	* The AdBlue® level is only sufficient for the displayed distance. ▶ Refill AdBlue® immediately . ⓘ The message disappears after driving at a speed above 15 km/h for approximately one minute.
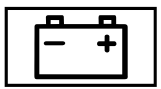 Start engine See Owner's Manual	* The engine is off and the battery charge level is too low. ▶ Switch off electrical consumers that are not required. ▶ Leave the engine running for a few minutes, or drive for a longer distance. The battery charges.
 Clean the fuel filter	* **Vehicles with a diesel engine:** the water in the fuel filter must be drained off. ▶ Consult a qualified specialist workshop.

Tyres

Display messages	Possible causes/consequences and ▶ Solutions
Tyre pressure Check tyres	* The tyre pressure loss warning system has detected a significant loss in pressure. ⚠ **WARNING** Risk of an accident due to insufficient tyre pressure Tyres with insufficient tyre pressure pose the following risks: • The tyres may burst, especially as the load and vehicle speed increase. • The tyres may wear excessively and/or unevenly, which may greatly impair tyre traction. • - The driving characteristics, steering and braking may be greatly impaired. You could then lose control of the vehicle. ▶ Observe the recommended tyre pressures. ▶ Adjust the tyre pressure if necessary. ▶ Stop the vehicle, paying attention to road and traffic conditions. ▶ Check the tyre pressure and the tyres. ▶ When the tyre pressure is correct, restart the tyre pressure loss warning system .
Check tyre pressures then restart Run Flat Indicator	* The tyre pressure loss warning system generated a display message and has not been restarted since. ▶ When the tyre pressure is correct, restart the tyre pressure loss warning system .
Run Flat Indicator inoperative	* The tyre pressure loss warning system is malfunctioning. ▶ Consult a qualified specialist workshop.

Display messages	Possible causes/consequences and ▶ Solutions
 Rectify tyre pressure	* The tyre pressure is too low in at least one of the tyres, or the tyre pressure difference between the wheels is too great. ▶ Check the tyre pressure and add air, if necessary. ▶ When the tyre pressure is correct, restart the tyre pressure monitoring system .
 Check tyre(s)	* The tyre pressure in one or more tyres has dropped significantly. The wheel position is displayed. ⚠ **WARNING** Risk of an accident due to insufficient tyre pressure Tyres with insufficient tyre pressure pose the following risks: • The tyres may burst, especially as the load and vehicle speed increase. • The tyres may wear excessively and/or unevenly, which may greatly impair tyre traction. • - The driving characteristics, steering and braking may be greatly impaired. You could then lose control of the vehicle. ▶ Observe the recommended tyre pressures. ▶ Adjust the tyre pressure if necessary. ▶ Stop the vehicle, paying attention to road and traffic conditions. ▶ Check the tyre pressure and the tyres.

Display messages	Possible causes/consequences and ▶ Solutions
 Warning tyre defect	* The tyre pressure in one or more tyres has dropped suddenly. The wheel position is displayed. **⚠ WARNING** Risk of an accident from driving with a flat tyre Flat tyres are dangerous in the following ways: • The tyres can overheat and cause a fire. • - The driving characteristics, steering and braking may be greatly impaired. You could then lose control of the vehicle. ▶ Do not drive with a flat tyre. ▶ Observe the notes on flat tyres. Notes on flat tyres (→ page 320). ▶ Stop the vehicle, paying attention to road and traffic conditions. ▶ Check the tyres.
Tyre press. monitor currently unavailable	* No signals can be received from the tyre pressure sensors due to strong radio signal source interference. The tyre pressure monitoring system is temporarily unavailable. ▶ Drive on. The tyre pressure monitoring system restarts automatically as soon as the cause has been rectified.

Display messages	Possible causes/consequences and ▶ Solutions
 Wheel sensor(s) missing	* There is no signal from the tyre pressure sensor of one or more wheels. The pressure of the affected tyre is not displayed. ▶ Have the faulty tyre pressure sensor replaced at a qualified specialist workshop.
Tyre press. monitor inoperative No wheel sensors	* The wheels fitted do not have suitable tyre pressure sensors. The tyre pressure monitoring system is deactivated. ▶ Fit wheels with suitable tyre pressure sensors.
Tyre press. monitor inoperative	* The tyre pressure monitoring system is faulty. ⚠ **WARNING** There is a risk of an accident if the tyre pressure monitoring system is malfunctioning If the tyre pressure monitoring system is malfunctioning, it is not able to issue a warning if there is pressure loss in one or more of the tyres. Tyres with insufficient tyre pressure may, for example, affect the vehicle's handling characteristics, steering and braking. - ▶ Have the tyre pressure monitoring system checked at a qualified specialist workshop. ▶ Consult a qualified specialist workshop.
Tyre(s) overheated	* At least one tyre is overheated. The affected tyres are displayed in red. At temperatures close to the limit value, the tyres are displayed in yellow. ▶ Drive more slowly.

Display messages	Possible causes/consequences and ▶ Solutions
Tyre(s) overheated Reduce speed	* At least one tyre is overheated. ⚠ **WARNING** Risk of an accident from driving with overheated tyres Overheated tyres may burst, particularly at high speeds. ▶ Reduce speed so that the tyres cool down. ▶ Reduce speed so that the tyres cool down.

Key

Display messages	Possible causes/consequences and ▶ Solutions
 Replace key	* The key needs to be replaced. ▶ Consult a qualified specialist workshop.

Display messages	Possible causes/consequences and ▶ Solutions
 Replace key See Owner's Manual	* **Vehicles with a digital vehicle key in the smartphone:** only a few or no authorisations remain for starting the engine. ▶ Make sure that the Internet connection is not limited by certain mobile phone settings. ▶ Open the Mercedes me connect web App http://www.mercedes.me. and call up the "digital vehicle key in the smartphone" service. ▶ Deactivate the service first and then activate it again. ▶ If the display message still appears, contact the Mercedes-Benz Customer Assistance Center (CAC).
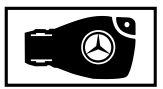 Change key batteries	* The key battery is discharged. ▶ Change the battery .
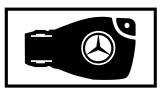 Key not detected (white display message)	* The key is currently undetected. ▶ Change the location of the key in the vehicle. ▶ If the key is still not recognised, start the engine with the key in the stowage compartment .

Display messages	Possible causes/consequences and ▶ Solutions
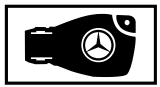 Place the key in the marked space See Owner's Manual	* The key detection function is malfunctioning. ▶ Change the location of the key in the vehicle. ▶ Start the vehicle with the key in the stowage compartment .
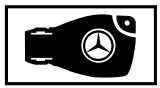 Key not detected (red display message)	* The key cannot be detected and may no longer be in the vehicle. The key is no longer in the vehicle and you switch off the engine: • You can no longer start the engine. • You cannot centrally lock the vehicle. ▶ Ensure that the key is in the vehicle. If the key detection function has a malfunction due to a strong radio signal source: ▶ Pull over and stop the vehicle safely as soon as possible, paying attention to road and traffic conditions. ▶ Place the key in the stowage compartment for starting the engine with the key .

Vehicle

Display messages	Possible causes/consequences and ▶ Solutions
 Trailer coupling extending...	* You retract or extend the ball neck. Do not attempt to speed up, slow down or initiate the retracting or extending process using your hand, foot or other aids. During the retracting or extending process, do not couple a trailer. When the ball neck has reached an operational position, the display message disappears.

Display messages	Possible causes/consequences and ▶ Solutions
 Check trailer hitch lock	* The trailer hitch is not operational. **⚠ WARNING** Risk of an accident if the ball neck is not locked If the ball neck is not in the locked position, the trailer may come loose. ▶ Pull over and stop the vehicle safely as soon as possible, paying attention to road and traffic conditions. Do not continue driving under any circumstances. ▶ Uncouple the trailer and secure it against rolling away. ▶ Initiate a new swivelling procedure and do not re-couple the trailer until the display message disappears. ▶ Stop the vehicle immediately, paying attention to road and traffic conditions, and switch off the engine. ▶ Uncouple the trailer and safeguard it against rolling away. ▶ Initiate a new swivelling procedure . ▶ When the display message disappears, couple up the trailer and drive on. If the display message does not disappear, the trailer hitch is defective and the ball neck is not locked. ▶ Do not couple up the trailer. Drive on without the trailer. Pay attention to the reduced ground clearance due to the unlocked ball neck. ▶ Consult a qualified specialist workshop.
Apply brake to deselect Park (P) position	* You have attempted to shift the transmission out of position P and into another transmission position. ▶ Depress the brake pedal.

Display messages	Possible causes/consequences and ▶ Solutions
To shift out of P or N, depress brake and start engine	* You have attempted to shift the transmission out of position P or N into another transmission position. ▶ Depress the brake pedal. ▶ Start the engine.
Risk of vehicle rolling Driver door open and transmission not in P	* The driver's door is not fully closed and the transmission is in position R, N or D. ▶ Shift the transmission to position P when you park the vehicle.
N permanently active Risk of vehicle rolling	* While the vehicle is rolling or while you are driving, the transmission has been shifted to position N. ▶ Depress the brake pedal to stop and, when the vehicle is stationary, shift the transmission to position P. ▶ To continue your journey, shift the transmission to position D or R.
Only select Park (P) when vehicle is stationary	* The transmission can only be shifted to position P when the vehicle is stationary.
Without changing gear, consult workshop	* The transmission is malfunctioning. The transmission position can no longer be shifted. ▶ When the transmission is in position D, consult a qualified specialist workshop and do not shift the transmission position. ▶ For all other transmission positions, park the vehicle safely. ▶ Consult a qualified specialist workshop.

Display messages	Possible causes/consequences and ▶ Solutions
 Vehicle is operational Switch off the ignition before exiting	* You are leaving the vehicle when it is in a ready-to-drive state. ▶ When you leave the vehicle, switch off the ignition and take the key with you. ▶ If you do not leave the vehicle, switch off the electrical consumers, e.g. the seat heater. Otherwise, the 12-volt battery might discharge and it will then only be possible to start the vehicle using a donor battery (starting assistance).
Transmission Malfunction Stop	* The transmission is malfunctioning. The transmission shifts to position N automatically. ▶ Pull over and stop the vehicle safely as soon as possible, paying attention to road and traffic conditions. ▶ Switch the transmission to position P. ▶ Consult a qualified specialist workshop.
Reversing not poss. Consult workshop	* The transmission is malfunctioning. Reverse gear can no longer be engaged. ▶ Consult a qualified specialist workshop.
Stop vehicle Leave engine running Wait Transmission cooling	* The transmission has overheated. Pulling away can be temporarily impaired or not possible. ▶ Pull over and stop the vehicle safely as soon as possible, paying attention to road and traffic conditions. Do not continue driving under any circumstances. ▶ Start the engine. ▶ Wait until the display message disappears before pulling away.

Display messages	Possible causes/consequences and ▶ Solutions
Auxiliary battery malfunction	* The auxiliary battery for the transmission is no longer being charged. ▶ Consult a qualified specialist workshop. ▶ Until then, manually set the transmission to position P before you switch off the engine. ▶ Before leaving the vehicle, apply the electric parking brake.
Depress clutch fully to start engine	* You have attempted to start the engine without depressing the clutch pedal. ▶ Depress the clutch pedal and then start the engine. The engine has stalled while pulling away, e.g. because the clutch pedal was released too quickly. ▶ Depress the clutch pedal again. The engine starts automatically. ▶ Slowly release the clutch pedal to pull away.
Clutch overheated Avoid pulling away for XX:XX mins	* The clutch is under considerable load and is overheating. Avoid frequent pulling away and driving at walking pace over longer distances. ▶ Stop the vehicle, paying attention to road and traffic conditions and leave the engine running. The clutch is cooled more quickly when the engine is running. or ▶ If possible, continue driving at a steady speed and remove your foot from the clutch pedal. Do not ride the clutch. The clutch is cooled while driving. When the clutch has cooled down, the display message disappears.

Display messages	Possible causes/consequences and ▶ Solutions
Air conditioning Malfunction See Owner's Manual	* Operation of the climate control system is temporarily restricted. Airflow and fresh air supply are set to automatic mode. ▶ Have the climate control system checked at a qualified specialist workshop.
 Before starting the engine, turn the steering wheel.	* **Vehicles with manual transmission:** the electric steering lock was unable to unlock the steering. ▶ Switch the ignition off. ▶ To unlock the steering, move the steering wheel slightly to the left and right. ▶ Switch the ignition back on.
 Steering malfunction See Owner's Manual	* **Vehicles with manual transmission:** the electric steering lock is malfunctioning. The steering may be locked by the electric steering lock. ⚠ **WARNING** Risk of accident if steering capability is impaired If the steering does not function as intended, the vehicle's operating safety is jeopardised. ▶ Pull over and stop the vehicle safely as soon as possible, paying attention to road and traffic conditions. Do not continue driving under any circumstances. ▶ Consult a qualified specialist workshop. ▶ Pull over and stop the vehicle safely as soon as possible, paying attention to road and traffic conditions. Do not continue driving under any circumstances. ▶ Consult a qualified specialist workshop.

Display messages	Possible causes/consequences and ▶ Solutions
Let fresh air into the vehicle interior! Air conditioning malf. Visit workshop	* The climate control system is malfunctioning. **⚠ WARNING** Risk of injury and accident due to an insufficient supply of fresh air If the climate control system is malfunctioning, carbon dioxide levels may increase in the passenger compartment. Breathing in carbon dioxide may cause dizziness. ▶ Open the window to ensure that there is a sufficient supply of fresh air. ▶ Open the window to ensure that there is a sufficient supply of fresh air. ▶ Consult a qualified specialist workshop immediately.
 Steering malfunction Drive carefully Visit workshop	* The power assistance of the steering is malfunctioning. You may need to use more force to steer. ▶ Drive on carefully. ▶ Consult a qualified specialist workshop.

Display messages	Possible causes/consequences and ▶ Solutions
 Steering malfunction Stop immediately See Owner's Manual	* The steering is malfunctioning. Steering capability is considerably impaired. **⚠ WARNING** Risk of accident if steering capability is impaired If the steering does not function as intended, the vehicle's operating safety is jeopardised. ▶ Pull over and stop the vehicle safely as soon as possible, paying attention to road and traffic conditions. Do not continue driving under any circumstances. ▶ Consult a qualified specialist workshop. ▶ Pull over and stop the vehicle safely as soon as possible, paying attention to road and traffic conditions. Do not continue driving under any circumstances. ▶ Consult a qualified specialist workshop.
 Steering malfunction Increased physical effort See Owner's Manual	* The power assistance of the steering is malfunctioning. **⚠ WARNING** Risk of an accident due to altered steering characteristics If the power assistance of the steering fails partially or completely, you will need to use more force to steer. ▶ If safe steering is possible, drive on carefully. ▶ Visit or consult a qualified specialist workshop immediately. ▶ If safe steering is possible, drive on carefully. ▶ Visit or consult a qualified specialist workshop immediately.

Display messages	Possible causes/consequences and ▶ Solutions
 inoperative Battery low	* The on-board electrical system voltage is too low. The stationary heater has switched itself off. ▶ Drive a long distance until the battery has reached a sufficient charge level again.
 inoperative Refuel vehicle	* There is too little fuel in the fuel tank. The stationary heater cannot be switched on. ▶ Refuel the vehicle.
Active bonnet malfunction See Owner's Manual	* The active bonnet (pedestrian protection) is malfunctioning or inoperative after having already been triggered. ▶ Consult a qualified specialist workshop.
 inoperative See Owner's Man.	* The stationary heater is temporarily malfunctioning. ▶ When the vehicle is on a level surface and the engine has cooled down, make up to four attempts to switch on the stationary heater, waiting several minutes between each attempt. ▶ If the stationary heater does not switch on, consult a qualified specialist workshop.

Display messages	Possible causes/consequences and ▶ Solutions
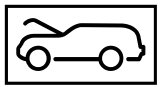	* The engine bonnet is open. **⚠ WARNING** Risk of accident due to driving with the engine bonnet unlocked An unlocked engine bonnet may open up when the vehicle is in motion and block your view. ▶ Never unlock the engine bonnet when driving. ▶ Before every trip, ensure that the engine bonnet is locked. ▶ Pull over and stop the vehicle safely as soon as possible. ▶ Close the engine bonnet.
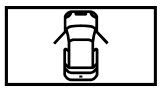	* At least one door is open. ▶ Close all doors.

Display messages	Possible causes/consequences and ▶ Solutions
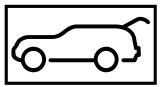	* The tailgate is open. **⚠ WARNING** Risk of exhaust gas poisoning Combustion engines emit poisonous exhaust gases such as carbon monoxide. Exhaust gases can enter the vehicle interior if the tailgate is open when the engine is running, especially if the vehicle is in motion. ▶ Always switch off the engine before opening the tailgate. ▶ Never drive with the tailgate open. ▶ Close the tailgate.
 Example:Rear left seat backrest not locked	* The corresponding seat backrest of the rear bench seat is not engaged. ▶ Fold the corresponding seat backrest back until it engages.
 Top up washer fluid	* The washer fluid level in the washer fluid reservoir has dropped below the minimum. ▶ Top up the washer fluid .

Lights

Display messages	Possible causes/consequences and ▶ Solutions
 Example:Left dipped beam	* The corresponding light source is defective. ▶ Consult a qualified specialist workshop. or ▶ Check whether you are permitted to replace the light source yourself . ⓘ LED light bulbs: the display message for the corresponding lamp only appears when all the light-emitting diodes in the lamp have failed.
 Active Light System inoperative	* The active light function is faulty. ▶ Consult a qualified specialist workshop.
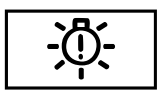 Intelligent Light System inoperative	* The Intelligent Light System is faulty. The lighting system continues to function properly without the functions of the Intelligent Light System. ▶ Consult a qualified specialist workshop.

Display messages	Possible causes/consequences and ▶ Solutions
 Malfunction See Owner's Manual	* The exterior lighting is faulty. ▶ Consult a qualified specialist workshop. **Vehicles with a trailer hitch:** a fuse may have blown. ▶ Pull over and stop the vehicle safely as soon as possible, paying attention to road and traffic conditions. ▶ Check the fuses and replace them if necessary .
 AUTO lights inoperative	* The light sensor is faulty. ▶ Consult a qualified specialist workshop.
 Switch off lights	* You are leaving the vehicle and the lights are still switched on. ▶ Turn the light switch to the AUTO position.
 Switch on headlamps	* You are driving without dipped-beam headlamps. ▶ Turn the light switch to the ≡D or AUTO position.
Adaptive Highbeam Assist Plus inoperative	* Adaptive Highbeam Assist Plus is faulty. ▶ Consult a qualified specialist workshop.

Display messages	Possible causes/consequences and ▶ Solutions
Adaptive Highbeam Assist Plus currently unavailable See Owner's Manual	* Adaptive Highbeam Assist Plus is temporarily unavailable. The system borders have been reached (→ page 130). ▶ Drive on. When the causes no longer apply, the system will be available again. The Adaptive Highbeam Assist Plus available again display message appears.
Adaptive Highbeam Assist Plus Camera view restricted See Owner's Manual	* The camera view is reduced. Possible causes: • dirt on the windscreen in the camera's field of vision • heavy rain, snow or fog Driving systems and driving safety systems may be malfunctioning or temporarily unavailable. When the causes no longer apply, driving systems and driving safety systems are available again. If the display message does not disappear: ▶ Pull over and stop the vehicle safely as soon as possible, paying attention to road and traffic conditions. ▶ Clean the windscreen.

Warning and indicator lamps

Overview of warning and indicator lamps

Some systems perform a self-test when the ignition is switched on. Some warning and indicator lamps may briefly light up or flash. This behaviour is non-critical. These warning and indicator lamps only indicate a malfunction if they light up or flash after the engine is started or during a journey.

Instrument display (standard)



Warning and indicator lamps:

- Dipped beam (→ page 125)
- Standing lights (→ page 125)
- Main beam (→ page 127)
- Turn signal light (→ page 127)
- Rear fog light (→ page 125)
- Seat belt is not fastened (→ page 439)
- Brakes (red) (→ page 433)
- ABS malfunction (→ page 433)
- ESP®(→ page 433)
- ESP® OFF (→ page 433)
- Electric parking brake(→ page 433)
- Steering assistance malfunction (→ page 441)
- Electrical fault (→ page 443)
- Restraint system (→ page 433)
- Engine diagnosis (→ page 443)
- Fuel reserve with fuel filler cap location indicator (→ page 443)
- Coolant too hot/cold (→ page 443)
- Distance warning (→ page 440)
- Preglow
- Tyre pressure monitoring system (→ page 446)
- Trailer hitch is not operational or is swivelling (→ page 441)

Safety systems

Warning/indicator lamp	Possible causes/consequences and ▶ Solutions
 Brake system warning lamp	The yellow brake system warning lamp is lit while the engine is running. ⚠ **WARNING** Risk of an accident due to a brake system malfunction If the brake system is malfunctioning, braking characteristics may be impaired. ▶ Drive on carefully. ▶ Have the brake system checked immediately at a qualified specialist workshop. ▶ Adjust your speed and continue to drive carefully, leaving a suitable distance to the vehicle in front. ▶ If the multifunction display shows a display message, please observe this. ▶ Consult a qualified specialist workshop.

Warning/indicator lamp	Possible causes/consequences and ▶ Solutions
 Brake system warning lamp	The red brake system warning lamp is lit while the engine is running. Possible causes: • The brake force boosting is malfunctioning and the braking characteristics may be affected. • There is insufficient brake fluid in the brake fluid reservoir. **⚠ WARNING** There is a risk of an accident if brake force boosting is malfunctioning If brake force boosting is malfunctioning, the wheels may lock when braking. Braking characteristics may be impaired. The braking distance may increase in an emergency braking situation. ▶ Pull over and stop the vehicle safely as soon as possible, paying attention to road and traffic conditions. Do not continue driving under any circumstances. ▶ Consult a qualified specialist workshop. **⚠ WARNING** Risk of an accident due to low brake fluid level If the brake fluid level is too low, the braking effect and the braking characteristics may be impaired. ▶ Pull over and stop the vehicle safely as soon as possible, paying attention to road and traffic conditions. Do not continue driving under any circumstances. ▶ Consult a qualified specialist workshop. Do not top up the brake fluid.

Warning/indicator lamp	Possible causes/consequences and ▶ Solutions
	▶ Pull over and stop the vehicle safely as soon as possible, paying attention to road and traffic conditions. Do not continue driving under any circumstances. ▶ Observe the messages in the multifunction display. ▶ Consult a qualified specialist workshop.
 ABS warning lamp	The yellow ABS warning lamp is lit while the engine is running. ABS is malfunctioning. If there is an additional acoustic warning signal, EBD is malfunctioning. Other driving systems and driving safety systems may also be faulty. ⚠ **WARNING** There is risk of skidding if EBD or ABS is malfunctioning If EBD or ABS is malfunctioning, the wheels could lock when braking The steering capability and braking characteristics are thus severely impaired. The braking distance may increase in an emergency braking situation. In addition, other driving safety systems are switched off. ▶ Drive on carefully. ▶ Have the brake system checked immediately at a qualified specialist workshop. ▶ Drive on carefully. ▶ Observe the messages in the multifunction display. ▶ Consult a qualified specialist workshop.

Warning/indicator lamp	Possible causes/consequences and ▶ Solutions
 ESP® warning lamp flashes	The yellow ESP® warning lamp flashes while the vehicle is in motion. ESP® is intervening . ▶ Adapt your driving style to suit the road and weather conditions.
 ESP® warning lamp lights up	The yellow ESP® warning lamp is lit while the engine is running. ESP® is malfunctioning. Other driving and driving safety systems may also be faulty. ⚠ **WARNING** Risk of skidding if ESP® is malfunctioning If ESP® is malfunctioning, ESP® cannot carry out vehicle stabilisation. In addition, other driving safety systems are switched off. ▶ Drive on carefully. ▶ Have ESP® checked at a qualified specialist workshop. ▶ Drive on carefully. ▶ Observe the messages in the multifunction display. ▶ Consult a qualified specialist workshop.

Warning/indicator lamp	Possible causes/consequences and ▶ Solutions
 ESP® OFF warning lamp	The yellow ESP® OFF warning lamp is lit while the engine is running. ESP® is deactivated. ⚠ **WARNING** Risk of skidding when driving with ESP® deactivated If ESP® is deactivated, ESP® cannot carry out vehicle stabilisation. The availability of further driving safety systems is also limited. ▶ Drive on carefully. ▶ Only deactivate ESP® for as long as the situation requires. If ESP® cannot be activated, ESP® is malfunctioning. ▶ Have ESP® checked immediately at a qualified specialist workshop. ▶ Observe the notes on deactivating ESP® .

Warning/indicator lamp	Possible causes/consequences and ▶ Solutions
 Red indicator lamp, electric parking brake applied  Yellow electric parking brake indicator lamp is malfunctioning	The red electric parking brake indicator lamp flashes or is lit. The yellow indicator lamp is also lit if the electric parking brake malfunctions. ▶ Observe the messages in the multifunction display.

Warning/indicator lamp	Possible causes/consequences and ▶ Solutions
 Restraint system warning lamp	The red restraint system warning lamp is lit while the engine is running. The restraint system is malfunctioning. ⚠ **WARNING** Risk of injury or fatal injury due to a malfunction in the restraint system If the restraint system is malfunctioning, restraint system components may be triggered unintentionally or might not be triggered at all in the event of an accident. This may affect the seat belt tensioner or airbag, for example. ▶ Have the restraint system checked and repaired immediately at a qualified specialist workshop. ▶ Drive on carefully. ▶ Observe the messages in the multifunction display. ▶ Consult a qualified specialist workshop immediately.

Seat belt

Warning/indicator lamp	Possible causes/consequences and ▶ Solutions
 Seat belt warning lamp lights up	The red seat belt warning lamp lights up after starting the engine. In addition, an acoustic warning tone may sound. The seat belt warning lamp reminds the driver and front passenger to fasten their seat belts. ▶ Fasten your seat belt . If you have placed objects on the front passenger seat, the warning lamp may remain lit.

Warning/indicator lamp	Possible causes/consequences and ▶ Solutions
 Seat belt warning lamp flashes	The red seat belt warning lamp flashes and an intermittent warning tone sounds. The driver or front passenger has not fastened their seat belt while the vehicle is in motion. ▶ Fasten your seat belt . There are objects on the front passenger seat. ▶ Remove the objects from the front passenger seat.

Driving systems

Warning/indicator lamp	Possible causes/consequences and ▶ Solutions
 Distance warning warning lamp	The red distance warning lamp lights up while the vehicle is in motion. The distance to the vehicle in front is too small for the speed selected. If there is an additional warning tone, you are approaching an obstacle at too high a speed. ▶ Be prepared to brake immediately. ▶ Increase the distance. Active Brake Assist .

Vehicle

Warning/indicator lamp	Possible causes/consequences and ▶ Solutions
 Trailer hitch warning lamp	The red trailer hitch warning lamp is on. The trailer hitch is not operational or swivels. ⚠ **WARNING** Risk of an accident if the ball neck is not locked If the ball neck is not in the locked position, the trailer may come loose. ▶ Pull over and stop the vehicle safely as soon as possible, paying attention to road and traffic conditions. Do not continue driving under any circumstances. ▶ Uncouple the trailer and secure it against rolling away. ▶ Initiate a new swivelling procedure and do not re-couple the trailer until the display message disappears. ▶ Observe the messages in the multifunction display. If the trailer hitch swivels: ▶ Wait until the ball neck has reached the operational position.

Warning/indicator lamp	Possible causes/consequences and ▶ Solutions
 Power steering system warning lamp	The red power steering system warning lamp is lit while the engine is running. The power steering assistance or the steering itself is malfunctioning. **⚠ WARNING** Risk of accident if steering capability is impaired If the steering does not function as intended, the vehicle's operating safety is jeopardised. ▶ Pull over and stop the vehicle safely as soon as possible, paying attention to road and traffic conditions. Do not continue driving under any circumstances. ▶ Consult a qualified specialist workshop. ▶ Observe the messages in the multifunction display.

Engine

Warning/indicator lamp	Possible causes/consequences and ▶ Solutions
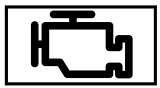 Engine diagnosis warning lamp	The yellow engine diagnosis warning lamp is lit while the engine is running. A malfunction has occurred in the engine, the exhaust system or the fuel system. The emission limit values may be exceeded and the engine may be running in emergency operation mode. ▶ Have the vehicle checked as soon as possible at a qualified specialist workshop. **Vehicles with a diesel engine:** the fuel tank has been run dry. ▶ Start the engine three to four times after refuelling. If the yellow engine diagnosis warning lamp goes out, emergency operation mode is cancelled. The vehicle need not be checked.
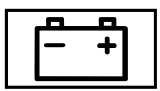 Electrical fault warning lamp	The red electrical fault warning lamp is lit. There is a fault in the electrics. ▶ Observe the messages in the multifunction display.
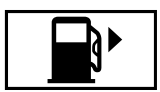 Fuel reserve warning lamp	The yellow fuel reserve warning lamp is lit while the engine is running. The fuel level has dropped into the reserve range. ▶ Refuel.

Warning/indicator lamp	Possible causes/consequences and ▶ Solutions
 Coolant warning lamp	The red coolant warning lamp is lit while the engine is running. Possible causes: • The temperature sensor is malfunctioning • The coolant level is too low • The air supply to the radiator is obstructed • The radiator fan is faulty If there is an additional warning tone, the coolant temperature has exceeded 120 °C. ⚠ **WARNING** Danger of burns when opening the bonnet If you open the engine bonnet when the engine has overheated or during a fire in the engine compartment, you could come into contact with hot gases or other escaping operating fluids. ▶ Before opening the bonnet, allow the engine to cool down. ▶ In the event of a fire in the engine compartment, keep the engine bonnet closed and call the fire service. ▶ Stop the vehicle immediately, paying attention to road and traffic conditions, and switch off the engine. Do not continue driving under any circumstances. ▶ Observe the messages in the multifunction display. If the coolant temperature display is at the lower end of the temperature scale: ▶ Consult a qualified specialist workshop.

Warning/indicator lamp	Possible causes/consequences and ▶ Solutions
	Otherwise: ▶ Leave the vehicle and keep a safe distance from the vehicle until the engine has cooled down. ▶ Check the coolant level . ▶ Make sure that the air supply to the radiator is not obstructed. ▶ Avoiding high loads on the engine, drive on to the nearest qualified specialist workshop. In doing so, ensure that the coolant temperature display remains below 120 °C.

Tyres

Warning/indicator lamp	Possible causes/consequences and ▶ Solutions
 Tyre pressure monitoring system warning lamp lights up	The yellow tyre pressure monitoring system warning lamp (pressure loss/malfunction) is lit. The tyre pressure monitoring system has detected tyre pressure loss in at least one of the tyres. ⚠ **WARNING** Risk of an accident due to insufficient tyre pressure Tyres with insufficient tyre pressure pose the following risks: • The tyres may burst, especially as the load and vehicle speed increase. • The tyres may wear excessively and/or unevenly, which may greatly impair tyre traction. • - The driving characteristics, steering and braking may be greatly impaired. You could then lose control of the vehicle. ▶ Observe the recommended tyre pressures. ▶ Adjust the tyre pressure if necessary. ▶ Stop the vehicle, paying attention to road and traffic conditions. ▶ Check the tyre pressure and the tyres.

Warning/indicator lamp	Possible causes/consequences and ▶ Solutions
 Tyre pressure monitoring system warning lamp flashes	The yellow tyre pressure monitoring system warning lamp (pressure loss/malfunction) flashes for approximately one minute and then remains lit. The tyre pressure monitoring system is faulty. ⚠ **WARNING** There is a risk of an accident if the tyre pressure monitoring system is malfunctioning If the tyre pressure monitoring system is malfunctioning, it is not able to issue a warning if there is pressure loss in one or more of the tyres. Tyres with insufficient tyre pressure may, for example, affect the vehicle's handling characteristics, steering and braking. - ▶ Have the tyre pressure monitoring system checked at a qualified specialist workshop. ▶ Consult a qualified specialist workshop.

1, 2, 3 ...

12 V socket
see Socket (12 V)

230 V socket 120

360° Camera 216
Care 313
Function 216
Selecting a view 219

A

A/C function
Activating/deactivating (control panel) 145
Activating/deactivating (multimedia system) 145

ABS (Anti-lock Braking System) 182

Acceleration
see Kickdown

Access data
Setting 288

Acoustic locking verification signal
Switching on/off 61

Active Blind Spot Assist 231
Activating/deactivating 233
Brake application 232
Function/notes 231
System limits 231
Trailer operation 232

Active bonnet (pedestrian protection) .. 303
Operation 303
Resetting 303

Active Brake Assist 188
Function/notes 188
Setting 192

Active Emergency Stop Assist 203

Active Lane Change Assist 203

Active Lane Keeping Assist 233
Activating/deactivating 235
Function 233
Sensitivity (function/notes) 236
Setting the sensitivity 236
System limits 233
Trailer operation 233

Active light function 128

Adaptive brake lights 193

Adaptive cruise control
see Distance Pilot DISTRONIC

Adaptive functions, MULTIBEAM LED
see Intelligent Light System

Adaptive Highbeam Assist Plus
Activating/deactivating 131
Function 130

AdBlue® 367
Additives 367
Filling capacity 368
Low outside temperatures 367
Notes 171
Purity 367

Additional door lock 64

Additives 368
AdBlue® 367
Engine oil 368
Fuel 365

Additives (engine oil)
see Additives

Additives (fuel)
see Fuel

Adjusting the balance/fader
Burmester® surround sound system 301
Adjusting the headlamp range 126
Adjusting the sound optimisation
Burmester® surround sound system 301
ADS PLUS damping system
see AIR BODY CONTROL
Adverse weather light 130
After-sales service centre
see ASSYST PLUS
AIR BODY CONTROL 206
Setting 208
Suspension 206
Air conditioning system
see Climate control
Air distribution 143
Air freshener system
see Fragrance system
Air suspension
see AIR BODY CONTROL
Air vents 153
Adjusting (front) 153
Adjusting (rear) 154
Glove box 154
Air vents
see Air vents
Air-recirculation mode 147
Airbag
Activation 27
Front airbag 32
Installation locations 32
Knee airbag 32
Overview 32
Protection 33
Reduced protection 34
Side impact airbag 32
Window airbag 32
Airbags
see Occupant safety
Airflow 143
AIRPANEL (Care) 313
Alarm
see Panic alarm
Alarm system
see Anti-theft protection
Ambient lighting 133
Animals
Pets in the vehicle 59
Anti-lock braking system
see ABS (Anti-lock Braking System)
Anti-theft alarm system
Anti-theft protection 84
Anti-theft protection 84
Additional door lock 64
ATA (anti-theft alarm system) 84
Immobiliser 84
Interior protection 85
Stopping the alarm (ATA) 84
Tow-away protection 85
Anticipatory occupant protection 39, 40
Ashtray
Front centre console 118
Rear 119
Assistance graphic
Menu (on-board computer) 248
Assistance systems
see Driving safety system

ASSYST PLUS 302
Battery disconnection periods 303
Displaying the service due date 302
Function/notes 302
Regular service work 302
Special service requirements 302
ATA (anti-theft alarm system)
Function 84
Stopping the alarm 84
ATA (anti-theft alarm system)
see Anti-theft protection
ATTENTION ASSIST 230, 231
Activating/deactivating 231
Function 230
System limitations 230
Attention assistant
see ATTENTION ASSIST
Audio 20
see Multimedia system
Audio mode
Activating media mode 292
Connecting USB devices 293
Copyright 292
Information 291
Inserting/removing SD memory card 292
Media search 294
Overview 293
Pause and playback function 294
Selecting a track 293
Selecting playback options 293
Track list 293
Authorised workshop
see Qualified specialist workshop
Automatic distance control
see Distance Pilot DISTRONIC
Automatic driving lights 126
Automatic engine start (ECO start/stop function) 160
Automatic engine stop (ECO start/stop function) 160
Automatic front passenger airbag shutoff
see Front passenger airbag shutoff
Automatic mirror folding function
Activating/deactivating 141
Automatic transmission
DIRECT SELECT lever 164
Drive program display 163
Drive programs 162
DYNAMIC SELECT switch 162
Engaging drive position 166
Engaging reverse gear 166
Kickdown 167
Manual gearshifting 167
Selecting park position 166
Shifting to neutral 166
Steering wheel gearshift paddles 167
Transmission position display 164
Transmission positions 164
Automatic transmission
see Selector lever
Automatic volume adjustment 266
Axle load
Permissible 361
Trailer operation 373

B

Bag hook 112

Ball neck
Extending/retracting 237
BAS (Brake Assist System) 182
Battery
Key 62
Remote control (stationary heater) 152
Battery (vehicle)
Charging 328
Notes 326
Starting assistance 328
Battery (vehicle)
see Vehicle battery
Belt 28
Bicycle rack
Trailer operation 241
Blind Spot Assist 231
Activating/deactivating 233
Function/notes 231
System limits 231
Blind Spot Assist
see Active Blind Spot Assist
Blower
see Climate control
BlueTEC
see AdBlue®
Bluetooth®
Activating/deactivating 265
Settings 265
Bluetooth® Audio
Activating 296
Adjusting the volume 296
De-authorising (de-registering) the device 297
Displaying device details 297
Information 295
Overview 295
Searching for and authorising the device 295
Boot lid
see Tailgate
Boot load 372
Brake Assist System
see BAS (Brake Assist System)
Brake fluid
Notes 369
Brake force distribution
EBD (Electronic Brake force Distribution) 187
Brakes
ABS (Anti-lock Braking System) 182
Adaptive brake lights 193
BAS (Brake Assist System) 182
Driving tips 158
EBD (Electronic Brake force Distribution) 187
HOLD function 204
Limited braking effect (salt-treated roads) 158
New/replaced brake linings/brake discs 158
Running-in notes 158
Brakes
see Active Brake Assist
Braking assistance
see BAS (Brake Assist System)
Breakdown 320
Assistance overview 14
Tow-starting 335
Towing away 331

Transporting the vehicle 333
Wheel change 352

Breakdown assistance call
see Service call

Breakdown management
see Service call

Burmester® surround sound system 301
Adjusting the balance/fader 301
Adjusting the sound optimisation 301
Adjusting treble, mid and bass 301
Calling up the sound menu 301
Information 301
Switching the surround sound on/off 301

Buttons
Steering wheel 245

C

Call lists
Calling up the speed dial list 276
Deleting speed dial presets 276
Displaying details from a list entry 275
Making a call 275
Overview 275
Setting up a speed dial list 276

Calling up the sound menu
Burmester® surround sound system 301

Calls 272
Accepting 272
Activating functions during a call 272
Calls with several participants 273
Declining 272
Ending a call 272
Incoming call during an existing call 273
Making 272
Via the overhead control panel (Mercedes me connect) 278

Camera
see 360° Camera
see Reversing camera

Car wash
see Care

Car wash (care) 310

Care 315
AIRPANEL 313
Car wash 310
Carpet 315
Display 315
Exterior lighting 313
Genuine wood/trim elements 315
High-pressure cleaner 310
Matt finish 312
Paint 312
Plastic trim 315
Reversing camera/360° Camera 313
Roof lining 315
Seat belt 315
Seat cover 315
Sensors 313
Tailpipes 313
Trailer hitch 313
Washing by hand 311
Wheels/rims 313
Windows 313
Wiper blades 313

Carpet (Care) 315

Changing bulbs 133
Dipped beam 134
Fitting/removing cover (front wheel arch) 134
Main beam 134
Notes 133
Overview 134

Turn signal light (front) 134
Changing hub caps 352
Channel tracking
Setting 299
Charging
Battery (vehicle) 328
Child safety lock
Rear door 57
Rear side windows 59
Child seat 41
Attaching (notes) 48
Folding bench seat suitable 54
Front passenger seat (notes) 46
Front passenger seat (rearward-facing/forward-facing) 47
Front passenger seat (without airbag shutoff) 47
ISOFIX/i-Size (fitting) 44
ISOFIX/i-Size (notes) 43
Notes 41
Recommended child restraint systems 55
Seats suitable for belt-secured child restraint systems 49
Seats suitable for i-Size child restraint systems 53
Seats suitable for ISOFIX child restraint systems 51
Top Tether 45
Children
Restraint systems 41
Chock
Storage location 351
Chock
see Wheel chock
Cigarette lighter 119
City lighting 130
Cleaning
see Care
Climate control 143
Activating/deactivating the A/C function (control panel) 145
Activating/deactivating the A/C function (multimedia system) 145
Activating/deactivating the synchronisation function (control panel) 146
Activating/deactivating the synchronisation function (multimedia system) 146
Adjusting the air vents 153
Air distribution settings 146
Air-recirculation mode 147
Automatic control 145
Climate style function 146
Demisting the windows 147
Demisting the windscreen 143
Fragrance system 147
Glove box air vent 154
Inserting/removing the flacon (fragrance system) 148
ionisation 147
Multimedia system overview 144
Note 143
Rear air vents 154
Rear operating unit 143
Residual heat 147
Setting the air distribution 143
Setting the airflow 143
Setting the climate style 146
Setting the temperature 143
Stationary heater/ventilation 149
Switching on/off 145

Switching the rear window heater on/off ... 143
THERMATIC control panel ... 143
THERMOTRONIC control panel ... 143
Windscreen heater ... 149

Climate style
Function ... 146
Setting ... 146

Cockpit ... 4
Overview ... 4

Combination switch
see Turn signal light

Combined luggage cover and net
Attaching to the rear seat backrest ... 110
Installing/removing ... 109

Computer ... 245

Controller
Operating ... 257

Convenience closing ... 77

Convenience opening ... 77

Coolant (engine)
Level check ... 308
Notes ... 370

Cooling
see Climate control

Copyright ... 24

Cornering light function ... 129

Cover ... 75

Cross Traffic Alert ... 229

Crosswind Assist
Function/notes ... 187

Cruise control ... 193
Activating ... 194
Calling up a speed ... 194
Deactivating ... 194
Function ... 193
Lever ... 194
Requirements ... 194
Selecting ... 194
Setting a speed ... 194
Storing a speed ... 194
System limits ... 193

Cup holder
see Cup holders

Cup holders ... 116, 117
Fitting/removing (centre console) ... 116, 117
Rear ... 118

D

Dashboard
see Cockpit

Dashboard lighting ... 247

Data acquisition
Vehicle ... 23

Data import/export
Function/notes ... 266
Importing/exporting ... 266
PIN protection for data export ... 267

Data roaming
Activating/deactivating (telephone module) ... 286

Declaration of Conformity
Electromagnetic compatibility ... 20
Jack ... 20
TIREFIT kit ... 21
Wireless vehicle components ... 20

Diagnostics connection 22
Diesel 366
Digital Owner's Manual 16
Digital speedometer 248
Dipped beam
Activating/deactivating 125
Changing bulbs 134
Setting 132
Setting for abroad (symmetrical) 125
DIRECT SELECT lever 164
Function 164
DIRECT SELECT selector lever
Engaging drive position 166
Engaging park position automatically .. 166
Engaging reverse gear 166
Selecting park position 166
Shifting to neutral 166
Display
Care 315
Notes (multimedia system) 255
Display (multimedia system)
Settings 264
Switching off 264
Display (on-board computer) 246
Display message 375
Calling up (on-board computer) 375
Notes 375
Display messages
 402, 427
 428
 427
 399
Active Blind Spot Assist currently unavailable See Owner's Manual 398
Active Blind Spot Assist inoperative 398
Active Blind Spot Assist not available when towing a trailer See Owner's Manual 401
Active bonnet malfunction See Owner's Manual 426
Active Brake Assist Functions currently limited See Owner's Manual 386
Active Brake Assist Functions limited See Owner's Manual 386
Active Lane Keeping Assist Camera view restricted See Owner's Manual ... 397
Active Lane Keeping Assist currently unavailable See Owner's Manual 396
Active Lane Keeping Assist inoperative 396
 Active Light System inoperative 429
Adaptive Highbeam Assist Plus Camera view restricted See Owner's Manual 431
Adaptive Highbeam Assist Plus currently unavailable See Owner's Manual 431
Adaptive Highbeam Assist Plus inoperative 430
 Add 1 litre engine oil when next refuelling 407
Air conditioning Malfunction See Owner's Manual 423

Apply brake to deselect Park (P) position ... 419
ATTENTION ASSIST inoperative ... 392
ATTENTION ASSIST: Take a break! ... 392
AUTO lights inoperative ... 430
Auxiliary battery malfunction ... 422
Before starting the engine, turn the steering wheel. ... 423
Blind Spot Assist currently unavailable See Owner's Manual ... 397
Blind Spot Assist inoperative ... 398
Blind Spot Assist not available when towing a trailer See Owner's Manual ... 400
Brake immediately ... 385
Change key batteries ... 416
Check AdBlue See Owner's Manual ... 408
Check brake fluid level ... 385
Check eng. oil lev. when next refuelling ... 405
Check trailer hitch lock ... 419
Check tyre(s) ... 412
Clean the fuel filter ... 410
Clutch overheated Avoid pulling away for XX:XX mins ... 422
Compressor is cooling ... 395
Coolant Stop vehicle Switch engine off ... 403
Cruise control and Limiter inoperative ... 400
Cruise control inoperative ... 401
Cruise control off ... 400
currently unavailable See Owner's Manual ... 376
currently unavailable See Owner's Manual ... 378
Depress clutch fully to start engine ... 422
Distance Pilot available again ... 398
Distance Pilot currently unavailable See Owner's Manual ... 399
Distance Pilot inoperative ... 399
LIM ... 400
Eng. start not possible in XXX km ... 409
Eng. start not possible ... 409
Engine oil level cannot be measured ... 408
Engine oil level Reduce oil level ... 406
Engine oil level Stop vehicle Switch engine off ... 406
Engine oil pressure Stop Switch off engine ... 407
Example: Front left malfunction Consult workshop ... 389
Example: Left dipped beam ... 429
Example: Left windowbag malfunction Consult workshop ... 389

Example: Parking Pilot Parking cancelled ... 398
Example: Rear left seat backrest not locked ... 428
Front-passenger airbag disabled See Owner's Manual ... 390
Front-passenger airbag enabled See Owner's Manual ... 391
inoperative See Owner's Manual ... 377
inoperative See Owner's Manual ... 379
EBD inoperative See Owner's Manual ... 380
SOS Inoperative ... 390
Intelligent Light System inoperative ... 429
Key not detected (red display message) ... 417
Key not detected (white display message) ... 416
Let fresh air into the vehicle interior! Air conditioning malf. Visit workshop ... 424
Limiter inoperative ... 400
Limiter passive ... 399
Malfunction See Owner's Manual ... 430
Malfunction See Owner's Manual ... 393
max. speed 22 mph ... 395
120 km/h Maximum speed exceeded ... 400
N permanently active Risk of vehicle rolling ... 420
HOLD Off ... 398
Only select Park (P) when vehicle is stationary ... 420
(P) Parking brake See Owner's Manual ... 382
Parking Pilot and PARKTRONIC inoperative See Owner's Manual ... 401
Parking Pilot Manoeuvring assistance limited See Owner's Manual ... 401
Place the key in the marked space See Owner's Manual ... 417
Please reduce speed ... 395
Please reduce speed ... 394
PRE-SAFE impulse side inoperative See Owner's Manual ... 387
PRE-SAFE inoperative See Owner's Manual ... 386
Radar sensors dirty See Owner's Manual ... 387
Rectify tyre pressure ... 412
Refill AdBlue Eng. start not possible ... 408
Refill AdBlue No start in XXX km ... 410

Refill AdBlue See Owner's Manual ... 408
Release parking brake ... 381
Replace air cleaner ... 409
Replace key See Owner's Manual ... 416
Replace key ... 415
Reserve fuel level ... 409
Restraint sys. malfunction Consult workshop ... 388
Reversing not poss. Consult workshop ... 421
Risk of vehicle rolling Driver door open and transmission not in P ... 420
See Owner's Manual ... 404
Speed limit (winter tyres) XXX km/h ... 400
Start engine See Owner's Manual ... 410
Steering malfunction Drive carefully Visit workshop ... 424
Steering malfunction Increased physical effort See Owner's Manual ... 425
Steering malfunction See Owner's Manual ... 423
Steering malfunction Stop immediately See Owner's Manual ... 425
Steering Pilot currently unavailable See Owner's Manual ... 399
Steering Pilot inoperative ... 399
Stop vehicle Leave engine running Wait Transmission cooling ... 421
Stop vehicle Leave engine running ... 405
Stop vehicle See Owner's Manual ... 404
Stop vehicle Vehicle too low ... 394
Switch off lights ... 430
Switch on headlamps ... 430
To shift out of P or N, depress brake and start engine ... 420
Top up coolant See Owner's Manual ... 402
Top up washer fluid ... 428
Trailer coupling extending... ... 418
Transmission Malfunction Stop ... 421
Turn on the ignition to release the parking brake ... 380
Tyre press. monitor currently unavailable ... 413
Tyre press. monitor inoperative ... 414
Tyre press. monitor inoperative No wheel sensors ... 414
Tyre pressure Check tyres ... 411
Tyre(s) overheated ... 414
Tyre(s) overheated Reduce speed ... 415
Vehicle is operational Switch off the ignition before exiting ... 421
Vehicle rising Please wait ... 392
Vehicle rising ... 392
Warning tyre defect ... 413
Wheel sensor(s) missing ... 414

Without changing gear, consult workshop ... 420
Distance control
see Distance Pilot DISTRONIC
Distance Pilot DISTRONIC ... 196
Activating ... 199
Activation conditions ... 199
Calling up a speed ... 199
Deactivating ... 199
Function ... 196
Lever ... 199
Selecting ... 199
Setting a speed ... 199
Storing a speed ... 199
System limits ... 196
Distance recorder ... 248
DISTRONIC
see Distance Pilot DISTRONIC
Door
Additional door lock ... 64
Locking (emergency key) ... 68
Opening (from inside) ... 64
Unlocking (emergency key) ... 68
Unlocking (from inside) ... 64
Door
see Locking/unlocking
Door control panel ... 12
Drive Away Assist ... 228
DRIVE PILOT ... 202
Function ... 202
Drive position
Selecting ... 166
Drive program display ... 163
Drive programs ... 162
Driver's seat
see Seat
Driving abroad
Symmetrical dipped beam ... 125
Driving light
see Automatic driving lights
Driving safety system ... 181
ABS (Anti-lock Braking System) ... 182
Active Brake Assist ... 188
Adaptive brake lights ... 193
BAS (Brake Assist System) ... 182
EBD (Electronic Brake force Distribution) ... 187
ESP® (Electronic Stability Program) Crosswind Assist ... 187
ESP® (Electronic Stability Program) trailer stabilisation ... 187
Overview ... 182
Radar sensors ... 181
Responsibility ... 181
Driving safety system
see ESP® (Electronic Stability Program)
Driving system
DYNAMIC BODY CONTROL ... 206
Driving system
see 360° Camera
see Active Blind Spot Assist
see Active Lane Keeping Assist
see AIR BODY CONTROL
see ATTENTION ASSIST
see Blind Spot Assist
see Cruise control
see Distance Pilot DISTRONIC
see DRIVE PILOT
see Driving safety system

see HOLD function
see Limiter
see Parking Assist PARKTRONIC
see Parking Pilot
see Remote Parking Pilot
see Reversing camera
see Steering Pilot

Driving tips
Driving abroad (symmetrical dipped beam) ... 125
General driving tips ... 158
Running-in notes ... 158

Drowsiness detection
see ATTENTION ASSIST

Drowsiness warning
see ATTENTION ASSIST

DYNAMIC BODY CONTROL
Suspension ... 206

Dynamic handling control system
see ESP® (Electronic Stability Program)

DYNAMIC SELECT
Configuring drive program I ... 163
Drive program display ... 163
Drive programs ... 162
Function ... 162
Operating (DYNAMIC SELECT switch) ... 163

E

E-mails
see Messages

E10 ... 364

Easy entry feature
Operation/notes ... 99
Setting ... 100

Easy exit feature
Operation/notes ... 99
Setting ... 100

EASY-PACK load-securing kit ... 112
Notes ... 112
Tensioning the luggage holder ... 113
Tensioning the telescopic rod ... 114

EBD (Electronic Brake force Distribution)
Function/notes ... 187

ECO display
Function ... 162
Resetting ... 249

ECO start/stop function ... 160, 161
Automatic engine start ... 160
Automatic engine stop ... 160
Operation ... 160
Switching off/on ... 161

Electric parking brake ... 178, 179, 180
Applying automatically ... 178
Applying or releasing manually ... 180
Emergency braking ... 180
Releasing automatically ... 179

Electric parking brake
see Parking

Electrical fuses
see Fuses

Electromagnetic compatibility
Declaration of Conformity ... 20

Electronic Stability Program
see ESP® (Electronic Stability Program)

Electronics ... 359

Emergency
Assistance overview ... 14
Fire extinguisher ... 319

First-aid kit (soft sided) 319
Removing the warning triangle 318
Safety vest 318
Setting up the warning triangle 319
Emergency braking 180
Emergency call system
see Mercedes-Benz emergency call system
Emergency engine start 335
Emergency key
Locking a door 68
Unlocking a door 68
Emergency key element
Inserting/removing 62
Unlocking the tailgate 74
Emergency operation mode
Starting vehicle 157
Emergency spare wheel
Notes 357
Removing 358
Emergency spare wheel
see Spare wheel
see Wheel change
Energy consumption
Key 61
Engine
ECO start/stop function 160
Engine number 361
Starting (emergency operation mode) 157
Starting (mobile phone) 156
Starting (start/stop button) 156
Starting assistance 328
Switching off (start/stop button) 174
Engine bonnet
Function (active bonnet) 303
Opening/closing 304
Resetting (active bonnet) 303
Engine electronics
Notes 359
Engine number 361
Engine oil 307
Additives 368
Checking the oil level using the oil dipstick 306
Checking the oil level using the on-board computer 306
Filling capacity 369
MB-Freigabe or MB-Approval 369
Topping up 307
Entering characters
Function/notes 262
On the controller 262
On the touchpad 263
ERA-GLONASS test mode
Starting/ending 283
ESC (Electronic Stability Control)
see ESP® (Electronic Stability Program)
ESP® (Electronic Stability Program) 183
Crosswind Assist 187
Function/notes 183
Switching on/off 187
Trailer stabilisation 187
EU type approval number 361
Exterior lighting
Care 313
Exterior lighting
see Lights

F

Fatigue warning
see ATTENTION ASSIST

Fault message
see Display message

Favourites
Adding ... 261
Calling up ... 260
Deleting ... 261
Moving ... 261
Overview ... 260
Renaming ... 261

Fire extinguisher ... 319

First-aid kit (soft sided) ... 319

Flacon
Inserting/removing ... 148

Flat tyre
MOExtended tyres ... 320
Notes ... 320
TIREFIT kit ... 322
Wheel change ... 352

Flat tyre
see Breakdown

Floor mat ... 123

Fog light (extended range) ... 129

Folding bench seat ... 95
Fitting and removing the seat cushion ... 96
Folding back ... 97
Folding out ... 95
Notes ... 95
Suitable child restraint systems ... 54

Fragrance
see Fragrance system

Fragrance system ... 148
Adjusting the fragrance intensity ... 147
Inserting/removing the flacon ... 148
Switching on/off ... 147

Frequencies
Mobile phone ... 360
Two-way radio ... 360

Frequency band
Selecting (on-board computer) ... 251

Front airbag ... 32

Front passenger airbag shutoff ... 35
PASSENGER AIR BAG indicator lamp ... 37
Points to remember when the front passenger seat is occupied ... 35
Status display ... 37
System self-test ... 37

Front passenger airbag shutoff
see Occupant safety

Front passenger seat
Adjusting from the driver's seat ... 90

Front passenger seat
see Seat

Fuel ... 365
Additives ... 365
Consumption ... 367
Diesel ... 366
E10 ... 364
Low outside temperatures ... 366
Petrol ... 364
Quality (diesel) ... 366
Quality (petrol) ... 364
Refuelling ... 168
Reserve fuel level ... 367
Sulphur content ... 364
Tank capacity ... 367

Fuel consumption
On-board computer 248
Function seat
see Door control panel
Fuse insert
see Fuses
Fuses 336
Assignment diagram 336
Before changing 336
Fuse box in the engine compartment .. 337
Fuse box in the front-passenger footwell 338
Fuse box in the load compartment 338
Fuse box on the dashboard 338
Notes 336

G

Garage door opener
Clearing the memory 177
Opening or closing the garage door 177
Programming buttons 175
Radio equipment approval number 178
Resolving problems 176
Synchronising the rolling code 176
Garmin® MAP PILOT navigation module
Activating 268
Overview 268
Gearshift paddles
see Steering wheel gearshift paddles
Gearshift recommendation 164, 167
Genuine parts 18
Genuine wood (Care) 315
Glide mode 168
Glove box
Air vent 154
Locking/unlocking 103
Gross mass 361

H

Handbrake
see Electric parking brake
Handling characteristics (unusual) 339
HANDS-FREE ACCESS 72
HANDS-FREE ACCESS
see Opening the tailgate using your foot
Hands-free system 65
Hazard warning lights 128
Head restraint 91
Front (adjusting manually) 91
Front (luxury head restraint) 92
Rear (adjusting) 93
Rear (lowering from the front) 93
Rear (removing/fitting) 93
Head-up display
Adjusting brightness (on-board computer) 253
Adjusting display elements (on-board computer) 253
Function 253
Menu (on-board computer) 253
Setting the position (on-board computer) 253
Switching on/off 254
Using the memory function 100
Head-up display
see Menu (on-board computer)
Head-up display menu
see On-board computer
Headlamp flashing 127

Heating
see Climate control
High-pressure cleaner (care) 310
Hill start assist 204
HOLD function 204
Activating/deactivating 205
Function/notes 204

I

i-Size child seat attachment
Seats suitable for attaching 53
i-Size child seat securing system
Fitting 44
Notes 43
Identification plate
Engine 361
Vehicle 361
Ignition
Switching on (start/stop button) 155
Ignition key 60
Immobiliser 84
Implied warranty
Vehicle 23
Inattentiveness assistant
see ATTENTION ASSIST
Indicator lamp
see Warning/indicator lamps
Individual drive program
Configuring 163
Selecting 163
Instrument cluster 431
Instrument cluster
see Instrument display
Instrument display 8, 244
Adjusting the lighting 247
Function/notes 244
Overview 8
Warning/indicator lamps 431
Instrument display
see Display (on-board computer)
see Instrument cluster
Instrument lighting 247
Instrument lighting
see Dashboard lighting
Intelligent Light System 128
Adaptive Highbeam Assist Plus 130
Adverse weather light 130
City lighting 130
Cornering light 129
Fog light (extended range) 129
Motorway mode 129
Overview 128
Switching on/off 130
Interior lighting 132
Ambient lighting 133
Setting 132
Switch-off delay time 133
Interior lighting
see Interior lighting
see Lighting
see Lights
Interior protection
Function 85
Switching on/off 85
Internet
Deleting favourites 291
Deleting history 291
Setting favourites 291

Internet connection
Cancelling permission ... 289
Closing ... 289
Establishing ... 289
Mobile phone details ... 289
Setting access data ... 288
Setting up ... 288
Ionisation ... 147
ISOFIX child seat attachment
Seats suitable for attaching ... 51
ISOFIX child seat securing system
Fitting ... 44
Notes ... 43

J

Jack
Declaration of Conformity ... 20
Storage location ... 351
Jump-start connection ... 328

K

Key ... 60
Battery ... 62
Emergency key element ... 62
Energy consumption ... 61
Key ring attachment ... 62
Overview ... 60
Panic alarm ... 61
Problem ... 63
Unlocking setting ... 61
Key
see Ignition key
see Locking
see Vehicle key
KEYLESS-GO
Locking the vehicle ... 66
Problem ... 67
Unlocking setting ... 61
Unlocking the vehicle ... 66
Kickdown ... 167
Using ... 167
Knee airbag ... 32

L

Laden ... 111
Bag hook ... 112
Roof rack ... 115
Stowage space underneath the load compartment floor ... 115
Tie-down eyes ... 111
Laden
see EASY-PACK load-securing kit
Lamp
see Interior lighting
Lamp (instrument display)
see Warning/indicator lamps
Lane Keeping Assist
see Active Lane Keeping Assist
Language
Notes ... 266
Setting ... 266
LED light
see Intelligent Light System
Level control system
see AIR BODY CONTROL
Light switch
Overview ... 125
Lighting ... 132
Lighting
see Lights

Lights 125, 132
Active light function 128
Adaptive Highbeam Assist Plus 130
Adjusting the instrument lighting 247
Adverse weather light 130
Automatic driving lights 126
Changing bulbs 133
City lighting 130
Combination switch 127
Cornering light function 129
Dipped beam 125
Driving abroad 125
Fog light (extended range) 129
Hazard warning lights 128
Headlamp flashing 127
Headlamp range 126
Intelligent Light System 128
Light switch 125
Main beam 127
Motorway mode 129
Parking lights 125
Rear fog light 126
Responsibility for lighting systems 125
Setting the dipped beam 132
Standing lights 125
Turn signal light 127

Limiter 193
Activating 194
Calling up a speed 194
Deactivating 194
Function 193
Lever 194
Passive mode 193
Permanent setting 196
Requirements 194
Selecting 194
Setting a speed 194
Storing a speed 194
System limits 193

Limiting speed
see Limiter

Limiting the opening angle (tailgate) 73

Load compartment cover
Extending/retracting 109
Notes 108

Loading guidelines 101

Loads
Securing 101

Locator lighting
Switching on/off 132

Locking 60

Locking/unlocking 64, 65, 69

Lowering
Vehicle 356

Lubricant additives
see Additives

Luggage
Securing 101

Lumbar support
see Lumbar support (4-way)

Lumbar support (4-way) 91

M

Main beam
Adaptive Highbeam Assist Plus 130
Changing bulbs 134
Switching on/off 127

Maintenance
see ASSYST PLUS

Malfunction
Restraint system 27

Manual transmission
Operating the gearshift lever 163
Matt finish (cleaning instructions) 312
Maximum speed
see Limiter
MB Info call
see Service call
Media
Menu (on-board computer) 251
Searching 294
Media Interface
Information 294
Overview 295
Switching on 295
Media mode
Activating 292
Media playback
Operating (on-board computer) 251
Media search
Starting 294
Media source
Selecting (on-board computer) 251
Memory function
Head-up Display – Calling up saved settings 100
Head-up Display – Saving settings 100
Operating 100
Outside mirror – Calling up saved settings 100
Outside mirror – Saving settings 100
Seat – Calling up saved settings 100
Seat – Saving settings 100
Steering wheel – Calling up saved settings 100
Steering wheel – Saving settings 100
Menu (on-board computer) 253
Assistance graphic 248
Media 251
Navigation 250
Overview 245
Radio 251
Service 247
Telephone 252
Trip 248
Mercedes me connect
Accident management 279
Breakdown assistance call 279
Calling the Mercedes-Benz Customer Centre using the multimedia system ... 277
Consenting to the transfer of data 280
Making a call via the overhead control panel 278
MB Info call 279
Notes 277
Service message 279
Transmitted data 280
Mercedes-Benz Apps
Calling up 289
Mercedes-Benz emergency call system 280
Automatic emergency call 281
Manual emergency call 282
Notes 280
Overview 280
Starting/ending ERA-GLONASS test mode 283
Transmitted data 282
Mercedes-Benz service centre
see Qualified specialist workshop
Message (multifunction display)
see Display message

Message memory 375
Messages 276
Activating/deactivating transferring (telephone module) 286
Making a call 277
Notes 276
Reading 277
Settings 276
Mirrors
see Outside mirrors
Mobile phone 252, 360
Authorising (Remote Parking Pilot) 228
Cancelling permission for Internet connection 289
Frequencies 360
Locking the vehicle 65
Starting the vehicle 156
Transmission output (maximum) 360
Unlocking the vehicle 65
Wireless charging 123
Mobile phone
see Hands-free system
see Locking/unlocking
see Mobile phone
see Telephone
Model type 361
MOExtended tyres 320
Motorway mode 129
MULTIBEAM LED
see Intelligent Light System
Multifunction display (on-board computer) 246
Multifunction steering wheel
Overview of buttons 245
Multifunction steering wheel
see Steering wheel
Multimedia system 255, 264
Activating/deactivating standby mode 181
Calling up menus 259
Central controls 255
Configuring display settings 264
Main functions 259
Overview 255
Restoring the factory settings 267
Switching the sound on/off 262

N

Navigation
Menu (on-board computer) 250
Navigation messages
On-board computer 250
Near Field Communication
Starting the vehicle (mobile phone) 156
Neutral
Selecting 166
Noise
Wheels and tyres 339

O

Occupant safety 26, 28, 32, 35, 39, 40
Pets in the vehicle 59
Occupant safety
see Child seat
Odometer
see Total distance recorder
Oil
see Engine oil

On-board computer 253
Assistance graphic menu 248
Displaying the service due date 302
Media menu 251
Menus 245
Multifunction display 246
Navigation menu 250
Operating 245
Radio menu 251
Service menu 247
Telephone menu 252
Trip menu 248
On-board computer
see Computer
see Operating system
On-board diagnostics interface
see Diagnostics connection
On-board electronics
Engine electronics 359
Notes 359
Two-way radios 359
On-board electronics
see Electronics
see Technical data
Opening the tailgate using your foot 72
Operating fluids
AdBlue® 367
Additives (fuel) 365
Brake fluid 369
Coolant (engine) 370
Engine oil 368
Fuel (diesel) 366
Fuel (petrol) 364
Notes 363
Windscreen washer fluid 371
Operating safety
Declaration of Conformity (electromagnetic compatibility) 20
Declaration of conformity (jack) 20
Declaration of conformity (TIREFIT kit) .. 21
Declaration of conformity (wireless vehicle components) 20
Information 19
Operating system 245
Outside mirrors 139, 140
Anti-dazzle mode (automatic) 140
Automatic mirror folding function 141
Folding in/out 139
Parking position 140
Setting 139
Using the memory function 100
Overhead control panel 10
Making calls (Mercedes me connect) .. 278
Overview
Garmin® MAP PILOT navigation module 268
Phone book 273
Owner's Manual
Vehicle equipment 19
Owner's Manual (digital) 16

P

Paint (cleaning instructions) 312
Paint code 361
Panic alarm 61
Activating/deactivating 61
Panorama sliding sunroof
see Sliding sunroof
Park position
Selecting 166
Selecting automatically 166

Parking 178
Parking aid
see Parking Assist PARKTRONIC
see Remote Parking Pilot
Parking Assist PARKTRONIC 210
Activating 212
Adjusting warning tones 212
Function 210
Side impact protection 211
Switching off 212
System limitations 210
Parking assistance systems
see Parking Pilot
Parking brake
see Electric parking brake
Parking lights 125
Parking Pilot 219
Cross Traffic Alert 229
Drive Away Assist 228
Exiting a parking space 222
Function 219
Manoeuvring assistance 230
Parking 221
System limits 219
Parking Pilot
see Remote Parking Pilot
Parking position
Outside mirrors 140
Passenger outside mirror – storing using the memory button 141
Parking up 180
Pedestrian protection
see Active bonnet (pedestrian protection)
Perfume
see Fragrance system
Perfume vial
see Fragrance system
Period out of use
Activating/deactivating standby mode 181
Permissible axle load 361
Permissible gross mass 361
Permitted towing methods 330
Petrol 364
Pets in the vehicle 59
Phone book
Deleting a contact 275
Display and sorting criteria 274
Downloading mobile phone contacts ... 274
Importing contacts 274
Overview 273
Saving a contact 274
Searching for a contact 274
PIN protection for data export 267
Plastic trim (Care) 315
Playback options
Selecting 293
Power supply
Switching on (start/stop button) 155
PRE-SAFE® (anticipatory occupant protection)
Function 39
PRE-SAFE® Sound 39
Reversing measures 40
PRE-SAFE® (anticipatory occupant protection)
see Anticipatory occupant protection
see Occupant safety

see Preventative occupant protection system
PRE-SAFE® Impulse Side
Activation 27
Function 40
PRE-SAFE® Impulse Side
see Anticipatory occupant protection
see Occupant safety
PRE-SAFE® PLUS (anticipatory occupant protection plus)
Function 40
Reversing measures 40
PRE-SAFE® PLUS (anticipatory occupant protection plus)
see Anticipatory occupant protection
see Occupant safety
Presets menu view
Activating/deactivating 299
Preventative occupant protection system 39
Protection of the environment
Notes 17
Returning an end-of-life vehicle 17

Q

QR code
Rescue card 23
Qualified specialist workshop 22

R

Radar sensors 181
Radiator shutters
see AIRPANEL (Care)
Radio
Activating 297
Activating/deactivating the presets view 299
Calling up the station list 298
Deleting stations 299
Displaying information 300
Displaying the artist and track 300
Editing station presets 299
Frequency fix 299
Menu (on-board computer) 251
Moving stations 299
Overview 297
Searching for stations 297
Setting a station 297
Setting station tracking 299
Setting the frequency band 297
Sorting the station list 298
Storing stations 298
Switching traffic announcements on/off 300
Tagging music tracks 299
To display radio text 300
Radio station list
Sorting 298
Radio stations
Selecting (on-board computer) 251
Rain-closing feature
Sliding sunroof 81
Raising
Vehicle 353
Range
Displaying 248
Reading lamp
see Interior lighting
Rear door (child safety lock) 57
Rear fog light 126

Rear seat
see Seat
Rear seat belt
Status display 32
Rear seat belt status display 32
Rear window
Replacing the wiper blades 138
Rear window heater 143
Rear window wipers
Switching on/off 136
Rear-view mirror
see Outside mirrors
Recycling
see Take-back of end-of-life vehicles
Reducing agent
see AdBlue®
Refuelling
Refuelling the vehicle 168
Topping up AdBlue® 172
Registration
Vehicle 23
Remote control (stationary heater)
Displays 151
Problems 153
Replacing the battery 152
Setting 150
Remote Parking Pilot 224
Authorising a mobile phone 228
Function/notes 224
Operating 225
System limitations 224
Replacing a bulb
see Changing bulbs
Rescue card 23
Reserve
Fuel 367
Reset function (multimedia system) 267
Restoring (factory settings)
see Reset function (multimedia system)
Restraint system
Children 41
Function in an accident 27
Functionality 27
Malfunction 27
Protection 26
Reduced protection 26
System self-test 27
Warning lamp 27
Restraint system
see Occupant safety
Returning an end-of-life vehicle
Protection of the environment 17
Reverse gear
Selecting 166
Reversing camera 213
Care 313
Function 213
Opening the camera cover 216
Switching automatic mode on/off 216
Reversing camera (Parking Pilot)
Opening the camera cover 219
Switching automatic mode on/off 219
RF transmitters
see Two-way radios
Rims (Care) 313
Roll away protection
see HOLD function

Roller sunblind
Side windows 75
Roller sunblind
see Cover
Roof lining (care) 315
Roof load 372
Roof rack 115
Run-flat characteristics
MOExtended tyres 320
Running-in notes 158

S

Safety
see Child seat
Safety net
Attaching 110
Safety systems
see Driving safety system
Safety vest 318
SD memory card
Inserting/removing 292
Seat 87, 104
4-way lumbar support 91
Adjusting (electrically) 90
Adjusting (manually and electrically) 87
Adjusting (Seat Comfort) 89
Adjusting the seat backrest angle (rear) 107
Backrest (rear) folding forwards 104
Backrest (rear) locking 106
Correct driver's seat position 86
Folding the backrest (rear) back 106
Setting options 12
Using the memory function 100
Seat
see Folding bench seat
see Head restraint
Seat belt
Activating/deactivating seat belt adjustment 32
Adjusting the height 31
Care 315
Fastening 31
Protection 28
Rear seat belt status display 32
Releasing 31
Seat belt adjustment (function) 31
Seat belt
see Belt
see Occupant safety
Seat belt adjustment
Activating/deactivating 32
Function 31
Seat belt tensioners
Activation 27
Seat belt warning
see Seat belts
Seat belts 32
Reduced protection 29
Warning lamp 32
Seat cover (Care) 315
Seat heater
Switching on/off 93
Seat ventilation
Switching on/off 94
Selecting a gear
see Shifting gears
Selector lever 164

Selector lever
see DIRECT SELECT lever
Sensors (Care) ... 313
Service
Menu (on-board computer) ... 247
Service
see ASSYST PLUS
Service call ... 279
Breakdown assistance call ... 279
MB Info call ... 279
Service centre
see Qualified specialist workshop
Service interval display
see ASSYST PLUS
Setting a speed
see Cruise control
Setting summer time ... 264
Setting the date format ... 265
Setting the distance unit and temperature unit ... 266
Settings
Messages ... 276
Shifting gears ... 167
Gearshift recommendation ... 164, 167
Manual ... 167
Short text messages
see Messages
Side impact airbag ... 32
Side impact protection ... 211
Side windows
Child safety lock in the rear ... 59
Closing ... 75
Closing with the key ... 77
Convenience closing ... 77
Convenience opening ... 77
Opening ... 75
Opening with the key ... 77
Problem ... 78
Roller sunblind ... 75
Side windows
see Window lifter
see Windows
Ski/snowboard bag ... 107
Skid chains ... 339
Sliding sunroof ... 79
Automatic features ... 81
Closing ... 79
Closing with the key ... 77
Opening ... 79
Opening with the key ... 77
Problem ... 82
Rain-closing feature ... 81
Smartphone
see Telephone
Snow chains ... 339
Snow chains
see Skid chains
Socket (12 V) ... 119
Front centre console ... 119
Load compartment ... 121
Rear passenger compartment ... 120
Socket (230 V)
Rear ... 120
Sound
PRE-SAFE® Sound ... 39
Sound
see Burmester® surround sound system

see Tone settings
Spare wheel 357
Spectacles compartment 103
Speed dial list
Calling up 276
Deleting speed dial presets 276
Setting up 276
Speed limit for winter tyres
Setting 196
Speedometer
Digital 248
Standby mode
Activating/deactivating 181
Function 181
Standing lights 125
Start/Stop button
Starting vehicle 156
Switching off the vehicle 174
Switching on the power supply or ignition 155
Start/stop function
see ECO start/stop function
Starting assistance 328
Starting assistance
see Jump-start connection
Starting the engine
see Vehicle
Starting-off aid
see Hill start assist
Station
Deleting 299
Frequency fix 299
Moving 299
Searching 297
Setting 297
Storing 298
Station list
Calling up 298
Station presets
Editing 299
Stationary heater/ventilation
Displays (remote control) 151
Problems (remote control) 153
Setting (using the multimedia system) 150
Setting (via remote control) 150
Switching on/off (via control panel) 149
Steering Pilot 202
Active Emergency Stop Assist 203
Active Lane Change Assist 203
Function 202
Switching on/off 204
System limits 202
Steering wheel 245
Adjusting (electrically) 99
Adjusting (manually) 98
Buttons 245
Steering wheel heater 99
Using the memory function 100
Steering wheel gearshift paddles 167
Steering wheel heater
Switching on/off 99
Stopping the alarm (ATA) 84
Stowage areas
see Laden
see Stowage compartment
Stowage compartment 103
Armrest 103

Centre console 103
Door 103
Glove box 103
Rear armrest 103
Spectacles compartment 103

Stowage compartments
see Laden
see Stowage compartment

Stowage space underneath the load compartment floor 115

Sulphur content 364

Sun visor
Operating 141

Surround View
see 360° Camera

Suspension
Damping characteristics 206
DYNAMIC BODY CONTROL 206
Setting the suspension level 208

Suspension
see AIR BODY CONTROL

Suspension level
Setting 208

Switch-off delay time
Exterior 132
Interior 133

Switching residual heat on/off 147

Switching the surround sound on/off
Burmester® surround sound system 301

Synchronisation function
Activating/deactivating (control panel) 146
Activating/deactivating (multimedia system) 146

System settings
Automatic volume adjustment 266
Language 266
Notes on language selection 266
Reset function (multimedia system) 267
Setting the distance unit and temperature unit 266

System settings
see Multimedia system

T

Tailgate 69
Closing 70
Emergency release from the inside 74
HANDS-FREE ACCESS 72
Limiting the opening angle 73
Opening 69
Opening dimensions 371
Unlocking (emergency key) 74

Tailgate
see Locking/unlocking

Tailpipes (Care) 313

Take-back of end-of-life vehicles 17

Tank capacity
AdBlue® 368
Fuel 367
Reserve (fuel) 367

Technical data 359
Axle load (trailer operation) 373
Information 359
Notes (trailer hitch) 372
Tongue weight 373
Towing weight (towing a trailer) 373
Tyre pressure monitoring system 344
Vehicle identification plate 361

Telephone 269
Activating functions during a call 272

Authorising a mobile phone (Remote Parking Pilot) ... 228
Calls with several participants ... 273
Disconnecting the mobile phone ... 270
Incoming call during an existing call ... 273
Locking the vehicle (mobile phone) ... 65
Menu (on-board computer) ... 252
Notes ... 269
Reception and transmission volume ... 271
Starting the vehicle (mobile phone) ... 156
Switching mobile phones ... 270
Telephone menu overview ... 269
Telephone operation ... 272
Unlocking the vehicle (mobile phone) ... 65
Wireless charging (mobile phone) ... 123

Telephone
see Mobile phone

Telephone module
Activating and connecting ... 283
Activating/deactivating caller ID transmission ... 286
Activating/deactivating data roaming ... 286
Activating/deactivating network provider restriction ... 286
Activating/deactivating text message transfer ... 286
Adjusting the brightness ... 286
Charging a mobile phone ... 287
Data modem mode ... 285
Deleting call lists ... 287
Disconnecting ... 287
Establishing a connection to the mobile phone ... 284
Fitting/removing ... 283
Inserting/removing a SIM card ... 284
Notes on receiving text messages ... 287
Resetting to factory settings ... 288
Setting the ringtone ... 286
Settings ... 286
Storing the SIM card PIN ... 286
Switching mobile phones ... 285
Transferring the phone book ... 286

Telephone number
Dialling (on-board computer) ... 252

Telephone operation
see Calls

Temperature ... 143

Text messages
see Messages

Through-loading feature
see Seat

Tie-down eyes ... 111

Time
Manual time setting ... 265
Setting summer time ... 264
Setting the time and date automatically ... 264
Setting the time zone ... 264
Setting the time/date format ... 265

TIREFIT kit ... 321
Declaration of Conformity ... 21
Storage location ... 321
Using ... 322

TIREFIT kit
see Tyre pressure

Tone settings ... 300
Adjusting the balance/fader ... 300
Adjusting treble, mid and bass ... 300
Calling up the sound menu ... 300
Information ... 300

Tongue weight 373
Tool
see Vehicle tool kit
Top Tether 45
Total distance recorder 248
Displaying 248
Touch Control
On-board computer 245
Operating 256
Setting the sensitivity 257
Touchpad
Operating 258
Reading the handwriting recognition aloud 259
Selecting a station and track 259
Selecting an input language 259
Switching on/off 257
Tow-away protection
Function 85
Switching on/off 85
Tow-starting 335
Towing a trailer
Coupling up/uncoupling a trailer 238
Extending/retracting the ball neck 237
Towing away 331
Towing eye
Fitting 335
Storage location 334
Towing methods 330
Track
Selecting (audio mode) 293
Traffic announcements
Activating/deactivating 300
Trailer hitch
Axle load 373
Bicycle rack 241
Care 313
Extending/retracting the ball neck 237
General notes 372
Notes 237
Power socket 237
Tongue weight 373
Trailer operation
Active Blind Spot Assist 232
Active Lane Keeping Assist 233
Bicycle rack 241
Notes 237
Power socket 237
Trailer stabilisation
Function/notes 187
Trailer tow hitch
Towing weight 373
Transmission position display 164
Transporting
Vehicle 333
Trim element (Care) 315
Trip
Menu (on-board computer) 248
Trip computer
Displaying 248
Resetting 249
Trip distance
Displaying 248
Resetting 249
Trip distance
see Distance recorder
see Trip meter
Trip meter 248

Turn signal indicator
see Turn signal light
Turn signal light 127
Changing bulbs (front) 134
Switching on/off 127
Two-way radio telephone
see Mobile phone
Two-way radios 359
Frequencies 360
Notes on installation 359
Transmission output (maximum) 360
Type approval number (EU) 361
Tyre inflation compressor
see TIREFIT kit
Tyre pressure 322
Checking (tyre pressure monitoring system) 343
Notes 340
Restarting the tyre pressure loss warning system 347
Restarting the tyre pressure monitoring system 343
Tyre pressure loss warning system (function) 346
Tyre pressure monitoring system (function) 342
Tyre pressure table 341
Tyre pressure loss warning system
Function 346
Restarting 347
Tyre pressure monitoring system
Checking the tyre pressures 343
Function 342
Restarting 343
Technical data 344
Tyre pressure table 341
Tyre tread 339
Tyre-change tool kit
Overview 351
Tyres
Changing 352
Changing hub caps 352
Checking the tyre pressure (tyre pressure monitoring system) 343
Fitting 355
Flat tyre 320
MOExtended tyres 320
Noise 339
Notes on fitting 347
Removing 355
Replacing 347
Restarting the tyre pressure loss warning system 347
Restarting the tyre pressure monitoring system 343
Selection 347
Snow chains 339
Storing 351
TIREFIT kit 322
Tyre pressure (Notes) 340
Tyre pressure loss warning system (function) 346
Tyre pressure monitoring system (function) 342
Tyre pressure table 341
Tyre(s) 339
Unusual handling characteristics 339

U

Universal smartphone cradle
Adjusting 271
Adjusting inclination adjuster 271
Features 271

Inserting a mobile phone 271
Mounting 271
Removing 272
Using 271

Unlocking setting 61

USB devices
Connecting 293

V

Vehicle 156, 157
Activating/deactivating standby mode 181
Correct use 23
Data acquisition 23
Diagnostics connection 22
Equipment 19
Implied warranty 23
Locking (automatically) 67
Locking (emergency key) 67
Locking (from inside) 65
Locking (KEYLESS-GO) 66
Locking (mobile phone) 65
Lowering 356
Parking up 180
QR code rescue card 23
Qualified specialist workshop 22
Raising 353
Registration 23
Starting (emergency operation mode) 157
Starting (mobile phone) 156
Starting (start/stop button) 156
Switching off (start/stop button) 174
Unlocking (from inside) 65
Unlocking (KEYLESS-GO) 66
Unlocking (mobile phone) 65
Ventilating (convenience opening) 77

Vehicle
see Locking/unlocking

Vehicle battery 326

Vehicle data
Boot load 372
Roof load 372
Vehicle height 371
Vehicle length 371
Vehicle width 371
Wheelbase 371

Vehicle dimensions 371

Vehicle identification number
see VIN

Vehicle identification plate
EU type approval number 361
Paint code 361
Permissible axle load 361
Permissible gross mass 361
VIN 361

Vehicle identification plate
see Model type

Vehicle key 60

Vehicle key
see Key

Vehicle maintenance
see ASSYST PLUS

Vehicle tool kit 321
TIREFIT kit 321
Towing eye 334

Ventilating
Convenience opening 77

Ventilation
see Climate control

Vents
see Air vents
VIN 361
Identification plate 361
Seat 361
Windscreen 361
Visibility
Demisting the windows 147
Windscreen heater 149

W

Warning lamp
see Warning/indicator lamps
Warning system
see Anti-theft protection
Warning triangle
Removing 318
Setting up 319
Warning/indicator lamp
ABS warning lamp 435
Brake system warning lamp 433, 434
Coolant warning lamp 444
Distance warning warning lamp .. 440
Electrical fault warning lamp 443
Engine diagnosis warning lamp ... 443
ESP® OFF warning lamp 437
ESP® warning lamp flashes 436
ESP® warning lamp lights up 436
Fuel reserve warning lamp 443
Power steering system warning lamp 442
Red indicator lamp, electric parking brake applied 438
Restraint system warning lamp ... 439
Seat belt warning lamp flashes ... 440
Seat belt warning lamp lights up 439
Trailer hitch warning lamp 441
Tyre pressure monitoring system warning lamp flashes 447
Tyre pressure monitoring system warning lamp lights up 446
Yellow electric parking brake indicator lamp is malfunctioning 438
Warning/indicator lamps 431
Instrument display (overview) 8
Overview 431
PASSENGER AIR BAG 37
Warranty 23
Washer fluid
see Windscreen washer fluid
Washing by hand (care) 311
Web browser
Calling up a website 290
Calling up options 290
Calling up settings 290
Closing 291
Deleting Internet favourites 291
Deleting Internet history 291
Overview 290
Setting Internet favourites 291
Website
Calling up 290
Wheel change 357
Fitting a new wheel 355

Lowering the vehicle 356
Preparation 352
Raising the vehicle 353
Removing a wheel 355
Removing/fitting hub caps 352

Wheel chock 351

Wheel rotation 350

Wheels
Care 313
Changing 352
Changing hub caps 352
Checking 339
Checking the tyre pressure (tyre pressure monitoring system) 343
Fitting 355
Flat tyre 320
MOExtended tyres 320
Noise 339
Notes on fitting 347
Removing 355
Replacing 347
Restarting the tyre pressure loss warning system 347
Restarting the tyre pressure monitoring system 343
Rotating 350
Selection 347
Snow chains 339
Storing 351
TIREFIT kit 322
Tyre pressure (Notes) 340
Tyre pressure loss warning system (function) 346
Tyre pressure monitoring system (function) 342
Tyre pressure table 341
Unusual handling characteristics 339

Window airbag 32

Window lifter 75

Windows 75
Closing 75
Opening 75

Windows (Care) 313

Windscreen 136, 143
Demisting 143
Infrared reflective 142
Replacing the wiper blades 136

Windscreen
see Windscreen

Windscreen heater 149

Windscreen heating
see Windscreen heater

Windscreen washer fluid 371
Notes 371

Windscreen washer system
Topping up 309

Windscreen wipers
Replacing the wiper blades 136
Switching on/off 135

Winter operation
Snow chains 339

Winter tyres
Setting the permanent speed limit 196

Wiper blades
Care 313
Changing 136

Wireless charging
Function/notes 122
Mobile phone 123

Wireless vehicle components
Declaration of Conformity 20

Workshop
see Qualified specialist workshop

Publication details

Internet
Further information about Mercedes-Benz vehicles and about Daimler AG can be found on the following websites:

http://www.mercedes-benz.com

http://www.daimler.com

Editorial office
You are welcome to forward any queries or suggestions you may have regarding this Owner's Manual to the technical documentation team at the following address:

Daimler AG, HPC: CAC, Customer Service, 70546 Stuttgart, Germany

©Daimler AG: Not to be reprinted, translated or otherwise reproduced, in whole or in part, without written permission from Daimler AG.

Vehicle manufacturer
Daimler AG

Mercedesstrasse 137

70327 Stuttgart

Germany

As at 19.04.16



Digital – in the vehicle

Familiarise yourself with the contents of the Owner's Manual directly via the vehicle's multimedia system (menu item "Vehicle"). Start with the quick guide, discover your vehicle's highlights or broaden your knowledge with useful tips.



Vehicle document wallet

Here you can find comprehensive information about operating your vehicle and about services and warranties in printed form.



Digital – on the Internet

You can find the Owner's Manual on the Mercedes-Benz homepage.



Digital – as an App

The Mercedes-Benz Guides App is available free-of-charge in familiar App stores.

2135843704Z102

Order no. P213 0463 02 Part no. 213 584 37 04 Z102
Edition NA 2016-09d

Apple® iOS

Android™