Disclaimer
The following online version of the Owner's Manual describes all models as well as all the standard and optional equipment of your vehicle. Country-specific differences in the language variants are possible. Note that your vehicle may not be fitted with all features described. This is also the case for safety-relevant systems and functions. Please contact your authorised Mercedes-Benz dealer if you would like to have a printed Owner's Manual for other vehicle models and vehicle model years. The online version is the current valid Owner's Manual version. Possible variations to your vehicle may not be taken into account as Mercedes-Benz constantly updates their vehicles and equipment to the state of the art and introduces changes in design and equipment.
Please also read the printed Owner's Manual, any supplementary documents and the digital Owner's Manual in the vehicle.

Copyright
All Rights Reserved. All texts, images, graphics, are subject to Copyright and other laws for the protection of intellectual property. They may not be copied for commercial purposes or for transmission, nor changed and used on other websites.



Mercedes-Benz



C-Class

Owner's Manual

Mercedes-Benz

Symbols

In this manual, you will find the following symbols:

⚠ WARNING

Warning notes make you aware of dangers which could pose a threat to your health or life, or to the health and life of others.

Environmental note

Environmental notes provide you with information on environmentally aware actions or disposal.

! Notes on material damage alert you to dangers that could lead to damage to your vehicle.

i These symbols indicate useful instructions or further information that could be helpful to you.

▶ This symbol designates an instruction that you must follow.

▶ Several consecutive symbols indicate an instruction with several steps.

(▷ page) This symbol tells you where you can find further information on a topic.

▷▷ This symbol indicates a warning or an instruction that is continued on the next page.

Display This text indicates a message on the multifunction display/multimedia display.

Welcome to the world of Mercedes-Benz

Before you drive off for the first time, read this Owner's Manual carefully and familiarise yourself with your vehicle. For your own safety and a longer vehicle life, follow the instructions and warning notices in this manual. Disregarding them may result in damage to the vehicle or personal injury.

The equipment or model designation of your vehicle may vary according to:

- Model
- Order
- Country variant
- Availability

The illustrations in this manual show a left-hand-drive vehicle. On right-hand-drive vehicles, the layout of components and controls differs accordingly.

Mercedes-Benz is constantly updating its vehicles to the state of the art.

Mercedes-Benz therefore reserves the right to introduce changes in the following areas:

- Design
- Equipment
- Technical features

Consequently, the description may differ from your vehicle in some cases.

The following are integral parts of the vehicle:

- Digital Owner's Manual
- Printed Owner's Manual
- Service Booklet
- Equipment-dependent supplements

Keep these documents in the vehicle at all times. If you sell the vehicle, always pass all documents on to the new owner.

Apple® iOS

Android™

Please note that the Mercedes-Benz Guides App may not yet be available in your country.

2055846912Z102

Index **4**

Digital Owner's Manual **28**
Introduction 28
Operation 28

Introduction **29**
Environmental protection 29
Genuine Mercedes-Benz parts 29
Owner's Manual 30
Operating safety 30
QR code for rescue card 33
Data stored in the vehicle 33
Copyright information 35

At a glance **36**
Cockpit 36
Instrument cluster 38
Multifunction steering wheel 39
Centre console 40
Overhead control panel 43
Door control panel 44

Safety **45**
Panic alarm 45
Occupant safety 45
Children in the vehicle 60
Pets in the vehicle 71
Driving safety systems 72
Protection against theft 82

Opening and closing **85**
Key 85
Doors 91
Luggage compartment 93
Side windows 98
Sliding sunroof 102

Seats, steering wheel and mirrors .. **107**
Correct driver's seat position 107
Seats 107
Steering wheel 113
Mirrors 116
Memory function 119

Lights and windscreen wipers **121**
Exterior lighting 121
Interior lighting 127
Replacing bulbs 127
Windscreen wipers 131

Climate control **136**
Overview of climate control systems ... 136
Operating the climate control systems 139
Air vents 151

Driving and parking **152**
Running-in notes 152
Driving 152
DYNAMIC SELECT switch 162
Manual transmission 164
Automatic transmission 165
Refuelling 174
Parking 180
Driving tips 183
Driving systems 187
Towing a trailer 233
Bicycle rack 238

On-board computer and displays **241**
Important safety notes 241
Displays and operation 241
Menus and submenus 245
Display messages 262
Warning and indicator lamps on the instrument cluster 295

Multimedia system **307**
General notes 307
Important safety notes 307
Function restrictions 307
Operating system 307

Stowing and features **320**
Stowage areas 320
Features 331

Maintenance and care **341**
Engine compartment 341
ASSYST PLUS 346
Care 347

Breakdown assistance **355**
Where will I find...? 355
Flat tyre 358
Battery (vehicle) 362
Jump-starting 365
Towing away and tow-starting 368
Fuses 372

Wheels and tyres **375**
Important safety notes 375
Operation 375
Winter operation 377
Tyre pressure 378
Changing a wheel 384
Wheel/tyre combination 389
Emergency spare wheel 390

Technical data **393**
Information on technical data 393
Vehicle electronics 393
Identification plates 394
Service products and capacities 395
Vehicle data 402
Trailer tow hitch 403

1, 2, 3 ...

4ETS (Electronic Traction System)
see ETS/4ETS (Electronic Traction System)
4MATIC (permanent four-wheel drive) 205
4MATIC off-road system 205
12 V socket
see Socket (12 V)
230 V power socket 335
360° camera
Cleaning 351, 352
Display in the multimedia system .. 219
Function/notes 217

A

ABS (Anti-lock Braking System)
Display message 263
Function/notes 72
Warning lamp 298
Acceleration
see Kickdown
Accident
Automatic measures after an accident 60
Accident warning
see Driving safety system
Activating media mode
General notes 318
Activating/deactivating air-recirculation mode 144
Activating/deactivating cooling with air dehumidification 140
Active Blind Spot Assist
Activating/deactivating (on-board computer) 255
Display message 282
Function/notes 228
Active bonnet
display message 292
Active Brake Assist
Activating or deactivating 254
Display message 269
Function/notes 73
Active Brake Assist with cross-traffic function
Activating or deactivating 254
Display message 270
Function/notes 79
Important safety notes 80
Warning lamp 304
Active Lane Keeping Assist
Activating/deactivating (on-board computer) 255
Display message 282
Function/notes 231
Active light function
Function/notes 124
Active Light System
Display message 275
Active Service System PLUS
see ASSYST PLUS
ADAPTIVE BRAKE 79
Adaptive Brake Assist
Function/notes 74
Adaptive brake lights 75
Adaptive Damping System
Function/notes 204
Adaptive Damping System with continuous damping adjustment (ADS PLUS) 204
Adaptive Highbeam Assist
Display message 276
Function/notes 124
Switching on/off 125
Adaptive Highbeam Assist Plus
Display message 276
Function/notes 125
Switching on/off 126
AdBlue®
Additive 399
Display message 280
Displaying level and range 253
Filling capacity 399
Important safety notes 399
Low outside temperatures 399
Purity 399
Topping up 177
Additional speedometer 257
Additives (engine oil) 400

Address book
See also Digital Owner's Manual ... 307
Adjusting the headlamp range 123
Adjusting the volume
Multimedia system 308
After-sales service centre
see ASSYST PLUS
Air conditioning
General notes 136
Air filter (white display message) 280
Air pressure
see Tyre pressure
Air vents
Important safety notes 151
Rear 151
Setting 151
Setting the centre air vents 151
Setting the side air vents 151
Air-conditioning system
see Climate control
Airbag
Automatic front-passenger front airbag deactivation 53
Introduction 50
PASSENGER AIR BAG indicator lamps 46
Warning lamp 301
Airbags
Display message 273
Front airbag (driver, front passenger) 51
Important safety guidelines 50
Kneebag 52
Sidebag 52
Triggering 57
Windowbag 52
AIRMATIC
Display message 281
Function/notes 203
Setting the normal vehicle level 203
Setting the raised vehicle level 203
AIRPANEL
Cleaning instructions 351
Alarm
ATA (Anti-Theft Alarm system) 82
Switching off (ATA) 82
Switching the function on/off (ATA) 82
Alarm system
see ATA (Anti-Theft Alarm system)
All-wheel drive
see 4MATIC (permanent four-wheel drive)
AMG
Performance Seat 112
RIDE CONTROL sports suspension 204
switchable performance exhaust system 160
AMG menu (on-board computer) 258
Animals
see Pets in the vehicle
Anti-glare film 340
Anti-lock braking system
see ABS (Anti-lock Braking System)
Anti-skid chains
see Snow chains
Anti-Theft Alarm system
see ATA (Anti-Theft Alarm system)
Anticipatory occupant protection
see PRE-SAFE® (anticipatory occupant protection)
AppCode
see QR code
Aquaplaning 186
Armrest
Stowage compartment 322
Ashtray 334
Assistance display (on-board computer) 252
Assistance menu (on-board computer) 253
Assistance system
see Driving systems
ASSYST PLUS
Displaying a service message 346
Driving abroad 347
Hiding a service message 346
Resetting the service interval display 346
Service message 346
Special service requirements 347
ATA (Anti-Theft Alarm system)
Activating/deactivating 82
Function 82

Switching off the alarm 82
ATTENTION ASSIST
Activating/deactivating 255
Display message 281
Displaying the level 222
Function/notes 222
Authorised workshop
see Qualified specialist workshop
AUTO lights
Display message 275
see Lights
Automatic engine start (ECO start/stop function) 158
Automatic engine switch-off (ECO start/stop function) 158
Automatic front-passenger front airbag deactivation
Display message 273
Automatic front-passenger front airbag deactivation system
Operation 53
Problems 57
System self-test 55
Automatic headlamp mode 121
Automatic transmission
Accelerator pedal position 168
Changing gear 168
DIRECT SELECT lever 166
Display message 289
Double-clutch function 168
Drive program display 167
Drive programs 169
Driving tips 168
DYNAMIC SELECT switch 162
Emergency running mode 174
Engaging drive position 167
Engaging neutral 166
Engaging park position automatically 166
Engaging reverse gear 166
Engaging the park position 166
Gearshift recommendation 173
Gliding mode 169
Kickdown 169
Manual shifting 171
Oil temperature (on-board computer, Mercedes-AMG vehicles) 258
Overview 165
permanent setting 172
Problem (fault) 174
Pulling away 156
Starting the engine 155
Steering wheel gearshift paddles ... 171
Trailer towing 169
Transmission position display (DIRECT SELECT lever) 167
Transmission positions 168
Automatic transmission emergency running mode 174
Auxiliary heating/ventilation
Display message 292
Important safety notes 146
Problem (display message) 150
Remote control 148
Setting the departure time 149
Switching on/off (on the centre console) 148
Axle load, permissible (trailer towing) 404

B

Back button 308
Bag hook 326
Ball coupling
Folding in 236
Folding in/out 235
Folding out 235
BAS (Brake Assist System) 73
Basic settings
see Settings
Battery (key)
Checking 88
Important safety notes 88
Replacing 88
Battery (vehicle)
Charging 364
Display message 278
Important safety notes 362
Jump starting 365
Belt
see Seat belts
Belt tensioner
Activation 57
Belt warning 50

Blind Spot Assist
Activating/deactivating (on-board computer) ... 255
Display message ... 282
Notes/function ... 225
see Active Blind Spot Assist
Blower
see Climate control
BlueTEC
see AdBlue®
Bluetooth®
Connecting a different mobile phone ... 315
Searching for a mobile phone ... 315
See also Digital Owner's Manual ... 307
Telephony ... 314
Bonnet
Active bonnet (pedestrian protection) ... 341
Closing ... 342
Display message ... 292
Important safety notes ... 341
Opening ... 342
Boot
see Luggage compartment
Brake
Active Brake Assist with cross-traffic function ... 79
EBD ... 79
Brake Assist
see BAS (Brake Assist System)
Brake assistance
see BAS (Brake Assist System)
Brake fluid
Display message ... 268
Notes ... 400
Brake force distribution
see EBD (electronic brake force distribution)
Brake lamps
Adaptive ... 75
Brake linings
Display message ... 268
Brakes
ABS ... 72
Adaptive Brake Assist ... 74
BAS ... 73
Brake fluid (notes) ... 400
Display message ... 263
Driving tips ... 185
High-performance brake system ... 186
Hill start assist ... 157
HOLD function ... 200
Important safety notes ... 185
Parking brake ... 181
Warning lamp ... 297
Breakdown
Where will I find...? ... 355
see Flat tyre
see Towing away
Breakdown assistance
see Mercedes me connect
Brightness control (instrument cluster lighting) ... 36
Buttons on the steering column ... 242

C

Calling up a fault
see Display messages
Calling up the climate control bar
Multimedia system ... 311
Calling up the climate control menu
Multimedia system ... 311
Camera
see 360° camera
see Reversing camera
Car
see Vehicle
Car wash
see Care
Car wash (care) ... 347
Care
360° camera ... 351, 352
AIRPANEL ... 351
Automatic car wash ... 347
Carpets ... 354
Display ... 353
Exhaust pipe ... 352
Exterior lighting ... 350
Gear or selector lever ... 353
General notes ... 347
High-pressure cleaner ... 348
Interior ... 353
Matt paintwork ... 349

Paint 349
Plastic trim 353
Reversing camera 351, 352
Roof lining 354
Seat belt 354
Seat cover 353
Sensors 351
Steering wheel 353
Trim pieces 353
Washing by hand 348
Wheels 350
Windows 350
Wiper blades 350
Wooden trim 353
CD
See also Digital Owner's Manual ... 307
CD player (on-board computer) 250
Central locking
Locking/unlocking (key) 86
Centre console
Lower section 41
lower section (Mercedes-AMG vehicles) 42
Upper section 40
Changing the media source 249
Charge-air pressure (on-board computer, Mercedes-AMG vehicles) 258
Child
Restraint system 61
Child seat
Forward-facing restraint system 65
i-Size 62
ISOFIX 62
On the front-passenger seat 64
Rearward-facing restraint system 65
Recommendations 69
Suitable positions 65
Top Tether 63
Child-proof locks
Important safety notes 70
Rear doors 71
Children in the vehicle
Important safety notes 60
Cigarette lighter 334
Cleaning
Mirror turn signal 351
Trailer tow hitch 352
Climate control
Auxiliary heating/ventilation 146
Control panel for THERMATIC automatic climate control (2-zone) 137
Controlling automatically 140
Convenience opening/closing (air-recirculation mode) 144
Cooling with air dehumidification .. 140
Cooling with air dehumidification (multimedia system) 312
Demisting the windows 143
Demisting the windscreen 142
ECO start/stop function 139
Indicator lamp 140
Ionisation 146
Ionisation (multimedia system) 312
Notes on using the automatic climate control 138
Overview 311
Overview of systems 136
Perfume atomiser (multimedia system) 312
Perfume atomizer 145
Pre-entry climate control (via key) (multimedia system) 312
Pre-entry climate control at departure time (multimedia system) 312
Problem with the rear window heating 143
Problems with cooling with air dehumidification 140
Rear control panel 138
Setting the air distribution 141
Setting the air vents 151
Setting the airflow 142
Setting the climate mode 141
Setting the climate mode (multimedia system) 312
Setting the temperature 141
Switching air-recirculation mode on/off 144
Switching on/off 139
Switching residual heat on/off 145
Switching the rear window heating on/off 143

Switching the synchronisation function on and off 142
Synchronisation function (multimedia system) 313
THERMATIC control panel (1-zone automatic climate control) 137
THERMOTRONIC control panel (3-zone automatic climate control) 138
Climate control settings
Multimedia system 311
Coat hooks 329
Cockpit
Overview 36
Code for Apps
see QR code
Collapsible emergency spare wheel
see Emergency spare wheel
COMAND display
Cleaning 353
Combination switch 123
Combined luggage cover and net 327
Connecting a USB device
See also Digital Owner's Manual ... 307
Constant headlamp mode
see Daytime driving lights
Consumption statistics (on-board computer) 246
Controller 308
Controlling the speed
see Distance Pilot DISTRONIC
Convenience closing feature 100
Convenience opening feature 100
Convenience opening/closing (air-recirculation mode) 144
Coolant (engine)
Checking the level 345
Display message 277
Important safety notes 401
Temperature display in the instrument cluster 242
Warning lamp 302
Cooling
see Climate control
Copyright 35
Cornering light function
Display message 275
Function/notes 124
Cover
see Roller sunblind
Crosswind Assist 79
Cruise control
Cruise control lever 188
Deactivating 189
Display message 285
Driving system 188
General notes 188
Important safety notes 188
LIM indicator lamp 188
Selecting 188
Setting a speed 189
Storing and maintaining current speed 189
Storing the current speed or calling up the last stored speed 189
Cup holder
Centre console 332
Important safety notes 331
Rear compartment 332
Cycle rack 238

D

Dashboard
see Instrument cluster
Dashboard lighting
see Instrument cluster lighting
Data
see Technical data
Data carrier
Selecting 250
Data modem mode
Telephone module with Bluetooth® (SAP profile) 317
Daytime driving lights
Display message 275
Function/notes 121
Dealership
see Qualified specialist workshop
Declarations of conformity 31
Diagnostics connection 32
Diesel 398
Digital Owner's Manual
Help 28
Introduction 28

Digital speedometer 246
Digital TV
see TV
Dipped-beam headlamps
Display message 275
Replacing bulbs 128
Setting for driving abroad (symmetrical) 121
Setting for driving on the right/left 257
Switching on/off 122
DIRECT SELECT lever
Automatic transmission 166
Display
see Display message
see Warning and indicator lamps
Display message
Driving systems 281
Display messages
ASSYST PLUS 346
Calling up (on-board computer) 262
Engine 277
General information 262
Hiding (on-board computer) 262
Introduction 262
Key 294
Lights 275
Safety systems 263
Tyres 287
Vehicle 289
Distance control
see Driving system
Distance Pilot DISTRONIC
Activating 193
Activation conditions 193
Cruise control lever 193
Deactivating 197
Display Message 284
Displays in the instrument cluster .. 196
Driving tips 198
Driving with Distance Pilot DISTRONIC 194
Function/notes 192
Important safety notes 192
Selecting 193
Setting a speed 196
Setting the specified minimum distance 196
Stopping 195
with Steering Pilot 198
Distance warning function
Function/notes 74
Distance warning signal (warning lamp) 304
Distance warning system
see Active Brake Assist
Door
Automatic locking (switch) 92
Central locking/unlocking (key) 86
Control panel 44
Display message 292
Emergency locking 93
Emergency unlocking 93
Important safety notes 91
Opening (from the inside) 91
Drive program
Manual transmission 165
SETUP (on-board computer, Mercedes-AMG vehicles) 259
Drive programs
Automatic transmission 169
Display (DIRECT SELECT lever) 167
DYNAMIC SELECT switch 162
Driver's door
see Door
Driver's seat
see Seat
Driving abroad
Mercedes-Benz Service 347
Symmetrical dipped beam 121
Driving Assistance Plus package 228
Driving on flooded roads 187
Driving safety system
Active Brake Assist 73
Crosswind Assist 79
EBD (electronic brake force distribution) 79
STEER CONTROL 82
Driving safety systems
ABS (Anti-lock Braking System) 72
Active Brake Assist with cross-traffic function 79
ADAPTIVE BRAKE 79
Adaptive Brake Assist 74
Adaptive brake lights 75
BAS (Brake Assist System) 73

Distance warning function 73
ESP® (Electronic Stability Program) 75
Important safety guidelines 72
Overview 72
Driving system
Distance Pilot DISTRONIC 192
Distance Pilot DISTRONIC with Steering Pilot 198
Driving Assistance Plus package ... 228
Parking assist PARKTRONIC 210
Parking Pilot 205
RACE START (Mercedes-AMG vehicles) 201
Speed limiter 190
Driving systems
360°camera 217
Active Blind Spot Assist 228
Active Lane Keeping Assist 231
AIRMATIC 203
AMG RIDE CONTROL sports suspension 204
ATTENTION ASSIST 222
Blind Spot Assist 225
Cruise control 188
Display message 281
HOLD function 200
Lane Keeping Assist 227
Lane package 225
Reversing camera 213
Traffic Sign Assist 223
Driving tips
AMG ceramic brakes 186
Aquaplaning 186
Automatic transmission 168
Brakes 185
Distance Pilot DISTRONIC 198
Downhill gradient 185
Driving abroad 121
Driving in winter 187
Driving on flooded roads 187
Driving on wet roads 186
Fuel 184
General 183
Icy road surfaces 187
Important safety notes 152
Limited braking efficiency on salted roads 186
New brake disks 186
New brake pads/linings 186
Running-in tips 152
Snow chains 378
Subjecting brakes to a load 185
Symmetrical dipped beam 121
The first 1500 km 152
Towing a trailer 235
Wet road surface 185
DVD video
Operating (on-board computer) 250
See also Digital Owner's Manual ... 307
DYNAMIC SELECT switch
Automatic transmission 162
Climate control (THERMATIC 2-zone) 139
Manual transmission 162

E

EASY-ENTRY feature
Function/notes 115
EASY-EXIT feature
Function/notes 115
EBD (electronic brake force distribution)
Display message 265
Function/notes 79
ECO display
Function/notes 184
On-board computer 246
ECO start/stop function
Automatic engine start 158
Automatic engine switch-off 158
Climate control 139
Deactivating/activating 159
General information 157
Important safety notes 157
Introduction 157
Electromagnetic compatibility
Declaration of conformity 31
Electronic brake force distribution
see EBD (electronic brake force distribution)
Electronic Stability Program
see ESP® (Electronic Stability Program)

Emergency
Automatic measures after an accident ... 60
Emergency braking
see BAS (Brake Assist System)
Emergency key
Unlocking the driver's door ... 93
Emergency key element
Function/notes ... 87
General notes ... 87
Inserting ... 88
Locking vehicle ... 93
Removing ... 88
Emergency release
Driver's door ... 93
Emergency spare wheel
General notes ... 391
Important safety notes ... 390
Inflating the collapsible spare wheel ... 391
Removing ... 391
Technical data ... 391
Emergency unlocking
Tailgate ... 98
Vehicle ... 93
Engine
Display message ... 277
ECO start/stop function ... 157
Engine number ... 395
Jump-starting ... 365
Running irregularly ... 161
Starting (important safety notes) ... 155
Starting problems ... 161
Starting the engine with the key ... 155
Starting with the Start/Stop button ... 156
Stopping ... 181
Tow-starting (vehicle) ... 371
Warning lamp (engine diagnostics) ... 302
Engine electronics
Notes ... 393
Problem (fault) ... 161
Engine jump starting
see Jump starting (engine)
Engine oil
Additives ... 400
Checking the oil level ... 343
Checking the oil level using the dipstick ... 343
Display message ... 279
Filling capacity ... 400
General notes ... 399
Notes about oil grades ... 399
Notes on oil level/consumption ... 343
Temperature (on-board computer, Mercedes-AMG vehicles) ... 258
Topping up ... 344
Engine oil additives
see Additives (engine oil)
Entering an address
See also Digital Owner's Manual ... 307
Environmental protection
Returning an end-of-life vehicle ... 29
ESC (Electronic Stability Control)
see ESP® (Electronic Stability Program)
ESP® (Electronic Stability Program)
AMG menu (on-board computer) ... 259
Characteristics ... 76
Crosswind Assist ... 79
Deactivating/activating (button in Mercedes-AMG vehicles) ... 77
Deactivating/activating (notes, except Mercedes-AMG vehicles) ... 76
Deactivating/activating (on-board computer, except Mercedes-AMG vehicles) ... 253
Display message ... 263
Function/notes ... 75
General notes ... 75
Important safety guidelines ... 76
Trailer stabilisation ... 78
Warning lamp ... 298
ETS/4ETS (Electronic Traction System) ... 76
Exhaust
see Exhaust pipe
Exhaust pipe
Cleaning ... 352
Exterior lighting
Cleaning ... 350
Settings options ... 121
see Lights

Exterior mirrors
Adjusting 116
Anti-dazzle mode (automatic) 117
Folding in/out (automatically) 117
Folding in/out (electrically) 117
Out of position (troubleshooting) ... 117
Parking position 118
Resetting 117
Storing settings (memory function) 119

F

Fault message
see Display messages
Favourites
Overview 310
Features 331
Filler cap
see Fuel filler flap
Fire extinguisher 356
First-aid kit 356
Fitting a wheel
Fitting a wheel 388
Lowering the vehicle 389
Preparing the vehicle 385
Raising the vehicle 386
Removing a wheel 388
Securing the vehicle against rolling away 385
Fitting/removing
front wheel arch cover 129
Flat tyre
Changing a wheel/fitting the spare wheel 384
MOExtended tyres 358
Preparing the vehicle 358
TIREFIT kit 359
see Emergency spare wheel
Floormat 340
Foglamps (extended range) 124
Frequencies
Mobile phone 393
Two-way radio 393
Front wheel arch
Fitting/removing the cover 129
Front-passenger front airbag deactivation
Display message 273
Front-passenger front airbag deactivation system
Operation 53
Problems 57
System self-test 55
Front-passenger seat
see Seat
Fuel
Additives 398
Consumption statistics 246
diesel 398
Displaying the current consumption 246
Displaying the range 246
Driving tips 184
Fuel gauge 38
Grade (petrol) 396
Important safety notes 396
Low outside temperatures 398
Notes for C 200, C 200 4MATIC, C 250 397
Notes for C 300, Mercedes-AMG C 43 4MATIC 398
Notes for Mercedes-AMG vehicles 397
Problem (malfunction) 177
Quality (diesel) 398
Refuelling 174
Tank content/reserve fuel 396
Fuel filler flap
Closing 176
Opening 176
Fuel filter (white display message) .. 280
Fuel level
Calling up the range (on-board computer) 246
Gauge 38
Fuel tank
Capacity 396
Problem (malfunction) 177
Fuses
Allocation chart 373
Before changing 372
Dashboard fuse box 372

Fuse box in the engine compartment ... 373
Fuse box in the front-passenger footwell ... 373
Fuse box in the luggage compartment ... 373
Important safety notes ... 372

G

G-Meter (on-board computer, Mercedes-AMG vehicles) ... 259
Gear indicator (on-board computer, Mercedes-AMG vehicles) ... 258
Gearshift paddles
see Steering wheel gearshift paddles
Genuine Mercedes-Benz parts ... 29
Glove compartment ... 321
Google™ Local Search
See also Digital Owner's Manual ... 307

H

Handling control system
see ESP® (Electronic Stability Program)
HANDS-FREE ACCESS ... 96
Handwriting recognition
Switching text reader function on/off ... 310
Touchpad ... 309
Hazard warning lamps ... 123
Head restraint
General notes ... 110
Head restraints
Adjusting (electrically) ... 111
Adjusting (manually) ... 111
Adjusting (rear) ... 111
Adjusting the fore-and-aft position manually ... 111
Fitting/removing (rear) ... 111
Important safety notes ... 110
Head-up display
Adjusting the brightness ... 256
Displays and operating ... 244
Function/notes ... 244
Important safety notes ... 244
Selecting displays ... 255
Setting the position ... 256
Storing settings (memory function) ... 119
Switching on or off ... 244
Headlamp flasher ... 123
Headlamps
display message ... 276
Misting up ... 126
see Automatic headlamp mode
Heating
see Climate control
High-pressure cleaners ... 348
Hill start assist ... 157
HOLD function
Activating ... 201
Activation conditions ... 200
Deactivating ... 201
Display message ... 283
Function/notes ... 200
General notes ... 200
Home address
See also Digital Owner's Manual ... 307
Horn ... 36
HUD
see Head-up display

I

Ignition key
see Key
Ignition lock
see Key positions
Immobiliser ... 82
Indicator and warning lamp
Restraint system ... 301
Indicator and warning lamps
Coolant ... 302
SPORT handling mode ... 300
Indicator lamps
Display message ... 275
see Warning and indicator lamps
Indicators
see Turn signals
Insect protection on the radiator ... 342
Inspection
see ASSYST PLUS
Instrument cluster
Overview ... 38
Warning and indicator lamps ... 38

Instrument cluster lighting 241
Intelligent Light System
Activating/deactivating 256
Display message 275
Overview 124
Setting the dipped-beam headlamps for driving on the right/left .. 257
Interior lighting
Automatic control system 127
Control 127
Overview 127
Reading lamp 127
Interior motion sensor
Deactivating 83
Function 83
Interior perfume
see Perfume atomizer
iPod®
See also Digital Owner's Manual ... 307
ISOFIX child seat securing system 62

J

Jack
Declaration of conformity 31
Storage location 357
Using 386
Jump starting (engine) 365

K

Key
Changing the battery 88
Checking the battery 88
Convenience closing feature 100
Convenience opening feature 100
Display message 294
Door central locking/unlocking 86
Emergency key element 87
Important safety notes 85
KEYLESS-GO start function 87
Loss 89
Modifying the programming 87
Overview 85
Positions (ignition lock) 153
Problem (malfunction) 89
Starting the engine 155
Key positions
Key 153
Start/Stop button 154
KEYLESS-GO
Activating 87
Convenience closing 100
Deactivation 87
Locking 86
Removing the Start/Stop button ... 154
Start function 87
Unlocking 86
Kickdown
Driving tips 169
Manual gearshifting 173
Kneebag 52

L

Lamps
see Warning and indicator lamps
Lane Change Assist
see Active Blind Spot Assist
Lane detection (automatic)
see Lane Keeping Assist
Lane Keeping Assist
Activating/deactivating 228
Activating/deactivating (on-board computer) 255
Display message 282
Function/information 227
see Active Lane Keeping Assist
Lane package 225
Lap time (RACETIMER) 260
Lashing eyelets 325
Licence plate lamp (display message) 275
Light switch
operation 121
Lighting
see Lights
Lights
Activating/deactivating the Intelligent Light System 256
Active light function 124
Adaptive Highbeam Assist 124
Adaptive Highbeam Assist PLUS 125
Automatic headlamp mode 121
Cornering light function 124

Dipped-beam headlamps 122
Driving abroad 121
Foglamps (extended range) 124
General notes 121
Hazard warning lamps 123
Headlamp flasher 123
Headlamp range 123
Intelligent Light System (function) 124
Light switch 121
Main-beam headlamps 123
Misted up headlamps 126
Motorway mode 124
Parking lamps 122
Rear foglamp 122
Setting exterior lighting 121
Side lamps 122
Turn signals 123
see Interior lighting
LIM indicator lamp
Cruise control 188
Distance Pilot DISTRONIC 193
Variable limiter 190
Limiter
Deactivating, variable 191
Function/notes 190
General notes 190
LIM indicator lamp 190
Permanent 191
Setting a speed 191
Storing the current speed 191
Switching to passive 191
Variable 190
Limiting the speed
see Speed limiter
Loading guidelines 320
Locking
see Central locking
Locking (doors)
Automatic 92
Emergency locking 93
From inside (central locking button) 92
Locking centrally
see Central locking
Lubricant additives
see Additives (engine oil)
Luggage compartment
Opening/closing (from outside, HANDS-FREE ACCESS) 96
plug-in module (telescopic rods) 329
Luggage compartment cover
Important safety notes 326
Notes/function 326
Luggage compartment enlargement 323
Luggage compartment floor
Important safety notes 330
opening/closing 330
stowage well, under 330
Luggage compartment plug-in module (telescopic rod) 329
Luggage net 328
Lumbar support
Adjusting the 4-way lumbar support 112

M

M+S tyres 377
Main-beam headlamps
Adaptive Highbeam Assist 124
Adaptive Highbeam Assist PLUS 125
Display message 275
Replacing bulbs 129
Switching on/off 123
Maintenance
see ASSYST PLUS
Manual transmission
Drive program 165
DYNAMIC SELECT switch 162
Engaging reverse gear 164
Gear lever 164
Pulling away 156
Shift recommendation 165
Shifting to neutral 164
Starting the engine 155
Matt finish (cleaning instructions) .. 349
MB Contact
Display message 268
Media Interface
see Digital Owner's Manual
Memory card (audio) 250

Memory function
Seats, steering wheel, exterior mirrors 119
Mercedes me connect
Breakdown assistance call button 338
Display message 268, 269
General notes 337
Info call button 338
Mercedes-Benz Contact
General notes 337
Info call button 338
Roadside Assistance call button 338
Mercedes-Benz emergency call system
Switch in the overhead control panel 337
Mercedes-Benz Intelligent Drive
360°camera 217
Active Blind Spot Assist 228
Active Lane Keeping Assist 231
ATTENTION ASSIST 222
Blind Spot Assist 225
Distance Pilot DISTRONIC 192
Distance Pilot DISTRONIC with Steering Pilot 198
General notes 187
Lane Keeping Assist 227
Parking Assist PARKTRONIC 210
Parking Pilot 205
PRE-SAFE® (anticipatory occupant protection) 59
PRE-SAFE® PLUS (anticipatory occupant protection PLUS) 59
Reversing camera 213
Traffic Sign Assist 223
Mercedes-Benz Service Centre
see Qualified specialist workshop
Message memory (on-board computer) 262
Messages
see Display messages
see Warning and indicator lamps
Mirror turn signal
Cleaning 351
Mirrors
see Exterior mirrors
see Rear-view mirror
see Vanity mirror (in sun visor)
Mobile phone
Connecting (Bluetooth® interface) 314
Connecting another mobile phone 315
Connecting the telephone module with Bluetooth® (SAP profile) 317
Frequencies 393
Installation 393
Menu (on-board computer) 251
Notes/placing in the bracket 338
Transmission output (maximum) 393
Model type
see Vehicle identification plate
Modifying the programming (key) 87
MOExtended tyres 358
Motorway mode 124
MP3
Operating 250
See also Digital Owner's Manual ... 307
Multifunction display
Function/notes 243
Multifunction steering wheel
Operating the on-board computer .. 242
Overview 39
Multimedia system
Switching on and off 308
Music files
See also Digital Owner's Manual ... 307

N

Navigation
display (on-board computer) 247
Menu (on-board computer) 247
See also Digital Owner's Manual ... 307
Notes on running in a new vehicle .. 152

O

Occupant safety
Airbags 50
Automatic front-passenger front airbag deactivation 53
Automatic measures after an accident 60

Belt warning 50
Children in the vehicle 60
Important safety notes 45
PASSENGER AIRBAG indicator lamp 46
Pets in the vehicle 71
PRE-SAFE® (anticipatory occupant protection) 59
PRE-SAFE® PLUS (anticipatory occupant protection PLUS) 59
Restraint system introduction 45
Restraint system warning lamp 46
Seat belts 47
Odometer 245
Oil
see Engine oil
On-board computer
AMG menu 258
Assistance graphic menu 252
Assistance menu 253
Display messages 262
Displaying a service message 346
Displays and operation 241
Distance Pilot DISTRONIC 197
Factory settings 258
G-Meter 259
Head-up display 244
Important safety notes 241
Instrument cluster menu 257
Light menu 256
Media menu 249
Menu overview 245
Message memory 262
Navigation menu 247
Operating the TV 251
Operating video DVD 250
RACETIMER 260
Radio menu 249
Service menu 253
Settings menu 253
Standard display 245
Telephone menu 251
Trip menu 245
Vehicle menu 258
On-board diagnostics interface
see Diagnostics connection
Opening and closing the side trim panels 130
Operating instructions
Vehicle equipment 30
Operating safety
Declaration of conformity 31
Important safety note 30
Operating system
see On-board computer
Operation
Digital Owner's Manual 28
Outside temperature display 242
Overhead control panel 43
Override feature
Rear side windows 71
Owner's Manual
Overview 30

P

Paint code 394
Paintwork (cleaning instructions) ... 349
Panic alarm 45
Panorama sliding sunroof
Important safety information 102
Operating 103
Operating the roller sunblinds for the sliding sunroof 104
Problem (malfunction) 105
Rain-closing feature (when driving) 103
Rain-closing feature (when the engine is switched off) 103
Reversing feature 102
Parking
Important safety notes 180
Parking brake 181
Parking position for the exterior mirror on the front-passenger side 118
Reversing camera 213
Switching off the engine 181
see Parking Assist PARKTRONIC
Parking aid
see 360° camera
see Exterior mirrors
see Parking Assist PARKTRONIC
see Parking Pilot

see Reversing camera
Parking Assist
display message 283
Parking Assist PARKTRONIC
Deactivating/activating 212
Driving system 210
Function/notes 210
Important safety notes 210
Problems (faults) 213
Sensor range 210
Towing a trailer 210
Warning display 211
Parking assistance
see Parking Assist PARKTRONIC
Parking brake
Applying automatically (vehicles with automatic transmission) 182
Applying automatically (vehicles with manual transmission) 182
Applying or releasing manually 182
Display message 265
Electric parking brake 181
Emergency braking 183
General information 181
Releasing automatically 183
Warning lamp 301
Parking lamps
Display message 275
Switching on/off 122
Parking Pilot
Cancelling 209
Detecting parking spaces 206
Exiting a parking space 209
Function/notes 205
Important safety notes 205
Parking 207
Towing a trailer 205
PASSENGER AIR BAG
Display message 273
Indicator lamps 46
Pedestrian protection
see Bonnet
Perfume
see Perfume atomizer
Perfume atomiser
Setting the perfume intensity (multimedia system) 312
Vial 145
Perfume atomizer
Operating 145
Problem (malfunction) 146
Permanent all-wheel drive
see 4MATIC (permanent four-wheel drive)
Pets in the vehicle 71
Phone book
See also Digital Owner's Manual ... 307
Plastic trim (cleaning instructions) 353
Power windows
see Side windows
PRE-SAFE® (anticipatory occupant protection)
Operation 59
PRE-SAFE® (preventive occupant safety system)
Display message 269
PRE-SAFE® PLUS (anticipatory occupant protection PLUS)
Operation 59
Program
see Drive programs
Protection against theft
ATA (Anti-Theft Alarm system) 82
Immobiliser 82
Interior motion sensor 83
Tow-away protection 83
Protection of the environment
General notes 29
Pulling away
Automatic transmission 156
General notes 156
Hill start assist 157
Manual transmission 156
Trailer 156

Q

QR code
Mercedes-Benz Guide App 1
Rescue card 33
Qualified specialist workshop 32
Quick access for audio and telephone
Changing the station/music track 310

R

RACE START (Mercedes-AMG vehicles) ... 201
RACE TIMER (on-board computer, Mercedes-AMG vehicles) ... 260
Radar sensor system
Display message ... 271
Radiator cover ... 342
Radiator shutter
see AIRPANEL
Radio
Selecting a station ... 249
Radio mode
See also Digital Owner's Manual ... 307
Radio-based vehicle components
Declaration of conformity ... 31
Rain closing feature (panorama sliding sunroof) ... 103
Reading lamp ... 127
Rear compartment
Setting the air vents ... 151
Setting the airflow ... 142
Setting the temperature ... 141
Rear foglamp
Display message ... 275
Switching on/off ... 122
Rear seat (folding the backrest forwards/back) ... 324
Rear window heating
Problem (fault) ... 143
Switching on/off ... 143
Rear window wiper
Replacing the wiper blade ... 134
Switching on/off ... 132
Rear-compartment seat belt status indicator ... 50
Rear-view mirror
Anti-dazzle mode (automatic) ... 117
Dipping (manual) ... 116
Recuperation display ... 246
Reducing agent
see AdBlue®
Reflective safety vest ... 355
Refuelling
Fuel gauge ... 38
Important safety notes ... 174
Notes for Mercedes-AMG vehicles ... 397
Refuelling process ... 175
see Fuel
Remote control
Auxiliary heating/ventilation ... 148
Changing the batteries (auxiliary heating) ... 150
Replacing bulbs
Dipped-beam headlamps ... 128
Fitting/removing the cover (front wheel arch) ... 129
Important safety notes ... 127
Main-beam headlamps ... 129
Opening/closing the side trim panels ... 130
Overview of bulb types ... 128
Replacing front bulbs (vehicles with halogen headlamps) ... 128
Reversing lamp ... 130
Turn signals (front) ... 129
Turn signals (rear) ... 130
Replacing the battery (auxiliary heating remote control) ... 150
Rescue card ... 33
Reserve (fuel tank)
see Fuel
Reserve fuel
Display message ... 279
Warning lamp ... 302
Residual heat (climate control) ... 145
Restraint system
Display message ... 271
Introduction ... 45
Warning lamp ... 301
Warning lamp (function) ... 46
Rev counter ... 242
Reverse gear
Engaging (manual transmission) ... 164
Reversing camera
"Reverse parking" function ... 215
Cleaning instructions ... 351, 352
Coupling up a trailer function ... 216
Display in the multimedia system ... 214
General notes ... 213
Object detection (function/notes) ... 217

Switching on/off 214
wide-angle function 217
Reversing feature
Panorama sliding sunroof 102
Roller sunblinds 104
Side windows 99
Sliding sunroof 102
Tailgate 94
Reversing lamp
Replacing bulbs 130
Reversing lamps
Display message 275
Roll away protection
see HOLD function
Roller sunblind
Operation 104
Panorama sliding sunroof 104
Resetting 104
Roof carrier 330
Roof lining and carpets (cleaning instructions) 354
Roof load (maximum) 402
Route guidance
See also Digital Owner's Manual ... 307
Route guidance active 247

S

Safety
Children in the vehicle 60
see Occupant safety
see Operating safety
Safety net
Attaching 328
Important safety information 328
Safety system
see Driving safety systems
SD card
Inserting/removing 319
select 250
SD memory card
See also Digital Owner's Manual ... 307
Seat
Correct driver's seat position 107
Folding the backrest (rear compartment) forwards/back 323
Seat belt
Centre rear-compartment seat 49
Correct usage 48
Seat belts
Adjusting the driver's and front-passenger seat belt 50
Adjusting the height 49
Cleaning 354
Fastening 49
Important safety guidelines 47
Introduction 47
Rear seat belt status indicator 50
Releasing 49
Warning lamp 295
Warning lamp (function) 50
Seat function
see Seat
Seats
Adjusting (AMG Performance Seat) 112
Adjusting (electrically) 109
Adjusting (manually and electrically) 109
Adjusting the 4-way lumbar support 112
Adjusting the head restraint 110
Calling up a stored setting (memory function) 120
Cleaning the cover 353
Important safety notes 107
Seat heating 112
Seat heating problem 113
Seat ventilation 113
Seat ventilation problem 113
Storing settings (memory function) 119
Securing a load 325
Securing luggage 325
Selecting a gear
see Automatic transmission
Selector lever
see Automatic transmission
Sensors (cleaning instructions) 351
Service
see ASSYST PLUS
Service Centre
see Qualified specialist workshop
Service menu (on-board computer) 253

Service message
see ASSYST PLUS
Service products
AdBlue® special additives 399
Brake fluid 400
Coolant (engine) 401
Engine oil 399
Fuel 395
Important safety notes 395
Washer fluid 401
Setting the date/time format
See also Digital Owner's Manual ... 307
Setting the language
See also Digital Owner's Manual ... 307
Setting the time
See also Digital Owner's Manual ... 307
Settings
Factory (on-board computer) 258
On-board computer 253
SETUP (on-board computer, Mercedes-AMG vehicles) 259
Shifting to neutral (manual transmission) 164
Side lamps
Switching on/off 122
Side windows
Convenience closing 100
Convenience opening 100
Important safety notes 98
Opening/closing 99
Problem (malfunction) 101
Resetting 101
Reversing feature 99
Sidebag 52
SIM card
Inserting 317
Ski/snowboard bag 322
Sliding sunroof
Important safety information 102
Problem (malfunction) 105
see Panorama sliding sunroof
SMS
See also Digital Owner's Manual ... 307
Snow chains 378
Socket (12 V)
Centre console 335
General notes 335
Luggage compartment 335
Rear compartment 335
Socket (230 V) 335
SOS
display message 268, 269
Sound
Switching on/off 308
Spare wheel
see Emergency spare wheel
Specialist workshop 32
Spectacles compartment 321
Speed limiter
Display message 285
Important safety notes 190
Selecting 190
Storing the current speed or recalling the last stored speed 191
Speed, controlling
see Cruise control
Speedometer
Activating/deactivating the additional speedometer 257
Digital 246
In the Instrument cluster 38
Segments 241
Selecting a display unit 257
SPORT handling mode
Deactivating/activating (Mercedes-AMG vehicles) 77
Warning lamp 300
Sports exhaust system
AMG 160
Start not possible
display message 280
Start/Stop button
Key positions 154
Starting the engine 156
Start/stop function
see ECO start/stop function
Starting (engine) 155
Starting button
display message 295
Starting the engine
see Starting (engine)
STEER CONTROL 82
Steering
Display message 293

Warning lamps 306
Steering assistant STEER CONTROL
see STEER CONTROL
Steering Pilot
Display message 285
with Distance Pilot DISTRONIC 198
Steering wheel
Adjusting (electrically) 114
Adjusting (manually) 114
Button overview 39
Buttons (on-board computer) 242
Cleaning 353
EASY ENTRY/EXIT feature 115
Important safety notes 113
Storing settings (memory function) 119
Steering wheel gearshift paddles 171
Steering wheel heating
Problem (malfunction) 115
Switching on/off 114
Stopwatch (RACETIMER) 260
Stowage areas 320
Stowage compartment
Map pockets 322
Stowage compartments
Armrest (under) 322
Centre console 321
Cup holder 331
Door 322
Glove compartment 321
Important safety information 320
Rear 322
Spectacles compartment 321
see Stowage areas
Stowage net 322
Stowage space
Stowage net 322
Summer opening
see Convenience opening feature
Summer tyres
In winter 377
Sun blind
Rear side windows 333
Sun visor 333
Suspension mode
SETUP (on-board computer, Mercedes-AMG vehicles) 259
Suspension setting
AIRMATIC 204
Suspension settings
AMG RIDE CONTROL sports suspension 204
Switching
the interior motion sensor on/off 83
Switching on media mode
Via the device list 318
Switching the auxiliary heating/ventilation
On/off 147

T

Tail lamps
Display message 275
Tailgate
Display message 291
Emergency unlocking 98
HANDS-FREE ACCESS 96
Important safety notes 93
Limiting the opening angle 98
object detection 94
Opening dimensions 402
Opening/closing (automatically from inside) 97
Opening/closing (automatically from outside) 94
Opening/closing (manually from outside) 94
Reversing function 94
Tank
see Fuel tank
Technical data
Capacities 395
Drawbar load (maximum) 404
Information 393
Trailer loads 403
Vehicle data 402
Telephone
Accepting a call (multifunction steering wheel) 252
Authorising a mobile phone (connecting) 315

Connecting a Mobile phone (general information) ... 314
Display message ... 294
Introduction ... 251
Menu (on-board computer) ... 251
Number from the phone book ... 252
Redialling ... 252
Rejecting/ending a call ... 252
See also Digital Owner's Manual ... 307
Switching between mobile phones ... 315
Telephone compartment ... 322
see Mobile phone

Telephone module with Bluetooth® (SAP profile)
Activating and connecting the module ... 316
Charging a mobile phone ... 318
Connecting the mobile phone ... 317
Connecting the module via a USB cable ... 316
Data modem mode ... 317
Installing the module ... 316
Introduction ... 315
Saving/deleting the PIN for the SIM card ... 318
Settings ... 318
SIM card mode ... 317
Text messages ... 318
Transferring the phone book ... 318

Television
see TV

Temperature
Coolant (display in the instrument cluster) ... 242
Engine oil (on-board computer, Mercedes-AMG vehicles) ... 258
Outside temperature ... 242
Setting (climate control) ... 141
Transmission oil (on-board computer, Mercedes-AMG vehicles) ... 258

TEMPOMAT
Function/notes ... 188

Text messages
Telephone module with Bluetooth® (SAP profile) ... 318

Timing (RACETIMER) ... 260

TIREFIT Kit
Declaration of conformity ... 32
Important safety notes ... 359
Storage location ... 357
Tyre pressure not reached ... 361
Tyre pressure reached ... 361
Using ... 360

Top Tether ... 63

Topping up
AdBlue® ... 177

Total distance recorder ... 245

Touchpad
Changing the station/music track ... 310
Character suggestions ... 309
Deleting characters ... 309
Entering a space ... 309
Entering characters ... 309
Gesture control ... 309
Handwriting recognition ... 309
Operating the touchpad ... 309
Overview ... 308
Quick access for audio ... 310
Switching ... 308
Switching input line ... 309

Tow-away protection
Deactivating ... 83
Function ... 83
Priming/deactivating ... 83

Tow-starting
Emergency engine starting ... 371
Important safety notes ... 368

Towing
Important safety notes ... 368
Notes for 4MATIC vehicles ... 371
Transporting the vehicle ... 370
With the rear axle raised ... 369

Towing a trailer
Active Blind Spot Assist ... 231
Active Lane Keeping Assist ... 233
Axle load, permissible ... 404
ESP® (Electronic Stability Program) ... 78
Failure check for LEDs ... 237
Parking Assist PARKTRONIC ... 210
Parking Pilot ... 205
Pulling away with a trailer ... 156

Trailer tow hitch display message .. 292
Towing away
Fitting the towing eye 369
Removing the towing eye 369
With both axles on the ground 370
Towing eye 357
Traction system
see ETS/4ETS (Electronic Traction System)
Traffic Sign Assist
Activating/deactivating the warning function 254
Display message 283
Function/notes 223
Important safety notes 224
Instrument cluster display 224
Message function 224
Trailer
Folding the ball coupling in/out 235
Trailer coupling
see Towing a trailer
Trailer towing
7-pin connector 237
Blind Spot Assist 227
Cleaning the trailer tow hitch 352
Coupling up a trailer 236
Decoupling a trailer 236
Driving tips 235
Folding in the ball coupling 236
Folding out the ball coupling 235
Important safety notes 233
Lights display message 275
Power supply 237
Problem (fault) 238
Trailer loads 403
Transfer case 174
Transmission
Display message 290
see Automatic transmission
see Manual transmission
Transmission oil
temperature (on-board computer, Mercedes-AMG vehicles) 258
Transmission position display 167
Transporting the vehicle 370
Trim pieces (cleaning instructions) 353
Trip computer (on-board computer) 246
Trip meter
Calling up 245
Resetting (on-board computer) 247
Turn signal lamp
Replacing bulbs (rear) 130
Turn signals
Replacing bulbs (front) 129
Switching on/off 123
TV
Operating (on-board computer) 251
Two-way radio
Frequencies 393
Installation 393
Transmission output (maximum) 393
Type identification plate
see Vehicle identification plate
Tyre changing tool kit 357
Tyre inflation compressor
see TIREFIT kit
Tyre pressure
Calling up (on-board computer) 381
Display message 287
Not reached (TIREFIT) 361
Reached (TIREFIT) 361
Recommended 378
Tyre pressure loss warning
General notes 380
Important safety notes 380
Restarting 380
Tyre pressure monitor
Checking the tyre pressure electronically 382
Function/notes 381
General notes 381
Important safety notes 381
Radio type approval for the tyre pressure monitor 383
Restarting 382
Warning lamp 305
Warning message 382
Tyres
Changing a wheel 384
Checking 376
Direction of rotation 385
Display message 287
Important safety notes 375

Information on driving 375
MOExtended tyres 377
Replacing 384
Service life 376
Snow chains 378
Storing 385
Summer tyres in winter 377
Tyre size (data) 389
Tyre tread 376
Wheel and tyre combinations 389
see Flat tyre

U

Unlocking
Emergency unlocking 93
From inside the vehicle (central unlocking button) 92
USB devices
Connecting to the Media Interface 319
Using the TIREFIT
tyre pressure kit 360

V

Vanity mirror (in sun visor) 333
Vehicle
Correct use 33
Data acquisition 33
Display message 289
Electronics 393
Equipment 30
Implied warranty 33
Individual settings 253
Leaving parked up 183
Locking (in an emergency) 93
Locking (key) 86
Lowering 389
Operating safety 30
Parking 180
Pulling away 156
Raising 386
Registration 33
Securing from rolling away 385
Technical data 393
Towing away 368
Transporting 370
Unlocking (in an emergency) 93
Unlocking (key) 86
Vehicle data 402
Vehicle battery
see Battery (vehicle)
Vehicle data
Roof load (maximum) 402
Vehicle dimensions 402
Vehicle emergency locking 93
Vehicle identification number
see VIN
Vehicle identification plate 394
Vehicle level
AIRMATIC 203
Display message 281
Video
Operating the DVD 250
See also Digital Owner's Manual ... 307
VIN
Seat 395
Type plate 394

W

Warning and indicator lamps
ABS 298
Active Brake Assist 304
Airbag 301
Brakes 297
Distance warning signal 304
Engine diagnostics 302
ESP® 298
ESP® OFF 300
Fuel tank 302
General notes 295
LIM (cruise control) 188
LIM (Distance Pilot DISTRONIC) 193
LIM (variable limiter) 190
Overview 38
Parking brake 301
PASSENGER AIR BAG 46
Reserve fuel 302
Seat belt 295
Steering 306
Tyre pressure monitor 305
Warning triangle 356
Washer fluid
Display message 294

Weather display (COMAND Online)
See also Digital Owner's Manual ... 307
Wheel and tyre combinations
Tyres ... 389
Wheel bolt tightening torque ... 389
Wheel chock ... 385
Wheel sensors
display message ... 289
Wheels
Changing a wheel ... 384
Changing/replacing ... 384
Checking ... 376
Cleaning ... 350
Emergency spare wheel ... 390
Fitting a new wheel ... 388
Fitting a wheel ... 385
Important safety notes ... 375
Information on driving ... 375
Removing a wheel ... 388
Snow chains ... 378
Storing ... 385
Tightening torque ... 389
Wheel size/tyre size ... 389
Windowbag
Display message ... 272
Operation ... 52
Windows
Cleaning ... 350
see Side windows
Windscreen
Demisting ... 142
Windscreen washer fluid
see Windscreen washer system
Windscreen washer system
Important safety notes ... 401
Topping up ... 345
Windscreen wipers
Problem (malfunction) ... 135
Rear window wiper ... 132
Replacing the wiper blades ... 132
Switching on/off ... 131
Winter operation
Important safety notes ... 377
Radiator cover ... 342
Slippery road surfaces ... 187
Snow chains ... 378
Summer tyres ... 377
Winter tyres
Limiting the speed (on-board computer) ... 258
M+S tyres ... 377
Wiper arm
Moving to a vertical position ... 133
Wiper blades
Cleaning ... 350
Important safety notes ... 132
Replacing ... 132
Replacing (on the rear window) ... 134
Replacing (windscreen) ... 133
Without changing gear
display message ... 290
Wooden trim (cleaning instructions) ... 353
Workshop
see Qualified specialist workshop

Introduction

The printed Owner's Manual provides information about the safe operation of your vehicle. The Digital Owner's Manual provides comprehensive and specifically adapted information on your vehicle's equipment and multimedia system. You can call up the Digital Owner's Manual via the multimedia system.

ⓘ You will not incur any costs when calling up the Digital Owner's Manual. The Digital Owner's Manual works without connecting to the internet.

There are three ways to access the topics of the Digital Owner's Manual:

- **Visual search**

  The visual search allows you to explore your vehicle "virtually". Starting from either the vehicle exterior view or interior view, you can access many of the different topics covered by the Digital Owner's Manual. To access the vehicle interior section, select the "Vehicle interior" view.
- **Keyword search**

  The keyword search allows you to search for a keyword by entering characters.
- **Contents**

  You can select individual sections in the contents.

ⓘ The Digital Owner's Manual is deactivated for safety reasons while driving.

Operation

Calling up the Digital Owner's Manual

- ▶ Press the button on the centre console. The vehicle overview appears.
- ▶ Select the "Owner's Manual" menu item by turning ⦅◎⦆ and pressing ⓞ the controller.
- ▶ Confirm the message about the warning and safety notes ⓞ.
  The menu for the Digital Owner's Manual appears.

Operating the Digital Owner's Manual

General notes

Please observe the information about the operation of the controller (▷ page 308).

Content pages

You can access the pages of content by means of a visual search or a keyword search or by using the table of contents.

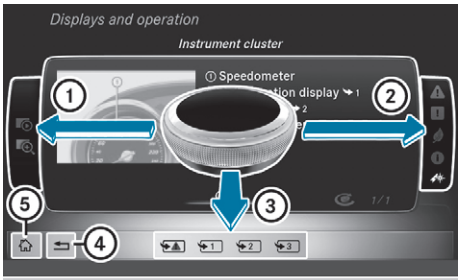

P82.89-0906-31

- ▶ **To scroll forwards/backwards:** turn the controller ⦅◎⦆.
- ▶ **To display in full screen or animation:** slide the controller to the left ◎← ①.
- ▶ **To select information text or save bookmarks:** slide the controller to the right ◎→ ②.
- ▶ **To select a link:** slide the controller downwards ◎↓ ③.
- ▶ **To exit a content page:** select the ⮌ symbol ④.
- ▶ **To call up the menu of the Digital Owner's Manual:** select the ⌂ symbol ⑤.
- ▶ **To switch functions to the multimedia system using the buttons on the centre console:** press the RADIO, TEL, MEDIA or NAVI button.
  The selected menu appears. The Digital Owner's Manual remains open in the background.

Environmental protection

General notes

Environmental note

Daimler's declared policy is one of comprehensive environmental protection.

Our objectives are to use the natural resources which form the basis of our existence on this planet sparingly and in a manner which takes the requirements of both nature and humanity into consideration.

You too can help to protect the environment by operating your vehicle in an environmentally-responsible manner.

Fuel consumption and the rate of engine, transmission, brake and tyre wear depend on the following factors:

- operating conditions of your vehicle
- your personal driving style

You can influence both factors. Therefore, please bear the following in mind:

Operating conditions:

- avoid short trips, as these increase fuel consumption.
- observe the correct tyre pressure.
- do not carry any unnecessary weight in the vehicle.
- remove the roof rack once you no longer need it.
- a regularly serviced vehicle will contribute to environmental protection. You should therefore adhere to the service intervals.
- all maintenance work should be carried out at a qualified specialist workshop.

Personal driving style:

- do not depress the accelerator pedal when starting the engine.
- do not warm up the engine when the vehicle is stationary.
- drive carefully and maintain a safe distance from the vehicle in front.
- avoid frequent, sudden acceleration and braking.
- change gear in good time and use each gear only up to 2/3 of its maximum engine speed.
- switch off the engine in stationary traffic.
- monitor the vehicle's fuel consumption.

Returning an end-of-life vehicle

EU countries only:

Mercedes-Benz will take back your end-of-life vehicle for environmentally friendly disposal in accordance with the European Union (EU) End-Of-Life Vehicles Directive.

A network of return points and disassembly plants has been established for you to return your vehicle. You can leave it at any of these points free of charge. This makes an important contribution to closing the recycling circle and conserving resources.

For further information on the recycling and disposal of end-of-life vehicles, and the take-back conditions, please visit the national Mercedes-Benz website for your country.

Genuine Mercedes-Benz parts

Environmental note

Daimler AG also supplies reconditioned assemblies and parts which are of the same quality as new parts. For these, the same warranty applies as for new parts.

! Airbags and seat belt tensioners, as well as control units and sensors for these restraint systems, may be installed in the following areas of your vehicle:

- doors
- door pillars
- door sills
- seats
- dashboard
- instrument cluster
- centre console

Do not install accessories such as audio systems in these areas. Do not carry out repairs or welding. You could impair the operating efficiency of the restraint systems.

Have accessories retrofitted at a qualified specialist workshop.

You could jeopardise the operating safety of your vehicle if you use parts, tyres and wheels as well as accessories relevant to safety that have not been approved by Mercedes-Benz. This could lead to malfunctions in safety-relevant systems, e.g. the brake system. Use only genuine Mercedes-Benz parts or parts of equal quality. Use only tyres, wheels and accessories that have been specifically approved for your vehicle.

Mercedes-Benz tests genuine parts and conversion parts and accessories that have been specifically approved for your vehicle for their reliability, safety and suitability. Despite ongoing market research, Mercedes-Benz is unable to assess other parts. Mercedes-Benz therefore accepts no responsibility for the use of such parts in Mercedes-Benz vehicles, even if they have been officially approved or independently approved by a testing centre.

In Germany, certain parts are officially approved for installation or modification only if they comply with legal requirements. This also applies to some other countries. All genuine Mercedes-Benz parts meet the approval requirements. The use of non-approved parts may invalidate the vehicle's general operating permit.

This is the case:

- if they cause a change of the vehicle type from that for which the vehicle's general operating permit was granted
- if other road users could be endangered
- if the emission or noise levels are adversely affected

Always specify the vehicle identification number (VIN) (▷ page 394) when ordering genuine Mercedes-Benz parts.

Owner's Manual

Vehicle equipment

ⓘ This Owner's Manual describes all models, standard and optional equipment for your vehicle that were available at the time of going to press. Country-specific differences are possible. Note that your vehicle may not be fitted with all features described. This is also the case for systems and functions relevant to safety. Therefore, the equipment on your vehicle may differ from that in the descriptions and illustrations.

The original purchase contract documentation for your vehicle contains a list of all of the systems in your vehicle.

Should you have any questions concerning equipment and operation, please consult a Mercedes-Benz Service Centre.

The Owner's Manual and Service Booklet are important documents and should be kept in the vehicle.

Operating safety

Important safety notes

⚠ WARNING

If you do not have the prescribed service/maintenance work or necessary repairs carried out, this could result in malfunctions or system failures. There is a risk of an accident.

Always have the prescribed service/maintenance work as well as necessary repairs carried out at a qualified specialist workshop.

⚠ WARNING

Flammable material such as leaves, grass or twigs may ignite if they come into contact with hot parts of the exhaust system. There is a risk of fire.

When driving off road or on unpaved roads, check the vehicle's underside regularly. In particular, remove parts of plants or other flammable materials which have become trapped. In the case of damage, contact a qualified specialist workshop.

⚠ WARNING

Modifications to electronic components, their software as well as wiring could affect their function and/or the operation of other networked components. This could in particular also be the case for systems relevant to safety. They might not function properly anymore and/or jeopardise the operational safety of the vehicle. There is an increased risk of an accident and injury.

Do not attempt to modify the wiring as well as electronic components or their software. Always have work on electrical and electronic components carried out at a qualified specialist workshop.

If you make any changes to the vehicle electronics, the general operating permit is rendered invalid.

! There is a risk of damage to the vehicle if:

- the vehicle becomes stuck, e.g. on a high kerb or an unpaved road
- you drive too quickly over an obstacle, e.g. a kerb, slowing thresholds or a pothole in the road
- a heavy object strikes the underbody or parts of the chassis

In situations like this, the body, underbody, chassis parts, wheels or tyres could be damaged without the damage being visible. Components damaged in this way can unexpectedly fail or, in the case of an accident, no longer withstand the strain they are designed to withstand.

If the underbody panelling is damaged, combustible materials such as leaves, grass or twigs can gather between the underbody and the underbody panelling. If these materials come into contact with hot parts of the exhaust system, they can catch fire.

In such situations, have the vehicle checked and repaired immediately at a qualified specialist workshop. If, on continuing your journey, you notice that driving safety is impaired, stop the vehicle immediately, paying attention to road and traffic conditions. In such cases, consult a qualified specialist workshop.

Declarations of conformity

Wireless vehicle components

The following information applies to all components of the vehicle and the information systems and communication devices integrated in the vehicle that receive and/or transmit radio waves.

The components of this vehicle that receive and/or transmit radio waves are compliant with the basic requirements and all other relevant conditions of Directive 1999/5/EC. You can obtain further information from any Mercedes-Benz Service Centre.

Electromagnetic compatibility

The electromagnetic compatibility of the vehicle components has been checked and certified according to the currently valid version of Regulation ECE-R 10.

Jack

Copy and translation of the original declaration of conformity:

Original CE declaration of conformity

Bosal Hungary KFT hereby declares that

Jack:

Daimler jack products

with

Serial no.:

A 205 580 00 00

A 212 580 00 18

A 212 580 04 18

A 231 580 00 18

comply with the following guidelines: EU2006/42/EC

We observed the following directive during development: EN ISO 12100

This publication provides authorisation to inspect (equipment), prepare technical documentation and provide authentication.

The jack may not be used before all the details have been defined and confirmed, as described in the Owner's Manual for the jack. If this is not the case, the jack may not be used.

[signature]	[signature]
R&D Manager BHUK	Project Engineer

BOSAL Automotive Carrier and Protection System GmbH
Steinbeisstraße 6
71706 Markgröningen
Phone: +49 7145 9350-0
Fax: +49 7145 9350-239
Email: info@eur.bosal.com
www.bosal.com

TIREFIT kit

Copy and translation of the original declaration of conformity:
EC declaration of conformity
In accordance with EC directive 2006/42/EC
We hereby declare that the product

Product designation:	Daimler electric air pump
Model designation:	0855, DT/UW 200036
MB part no.:	A 000 583 21 02

complies with the following relevant regulations:
EMC 2004/104/EC (2009/19/EC)
Applied harmonised standards, in particular:
ISO 7637-2: 2004-06 / ISO 7637-2AMD 1:2008:02

Manufacturer:	Dunlop Tech GmbH
Address:	Birkenhainerstrasse 77, 63450 Hanau, Germany
Authorised representative:	IMS department
Date:	June 2013
Signature:	IMS-AM, IMS-AE-L

Diagnostics connection

The diagnostics connection is used for connecting diagnostic equipment at a qualified specialist workshop.

⚠ WARNING

If you connect equipment to a diagnostics connection in the vehicle, it may affect the operation of vehicle systems. As a result, the operating safety of the vehicle could be affected. There is a risk of an accident.

Only connect equipment to a diagnostics connection in the vehicle, which is approved for your vehicle by Mercedes-Benz.

⚠ WARNING

Objects in the driver's footwell may restrict the clearance around the pedals or block a depressed pedal. This jeopardises the operating and road safety of the vehicle. There is a risk of an accident.

Stow all objects securely in the vehicle so that they do not get into the driver's footwell. Always fit the floormats securely and as prescribed in order to ensure that there is always sufficient room for the pedals. Do not use loose floormats and do not place several floormats on top of one another.

! If the engine is switched off and equipment on the diagnostics connection is used, the starter battery may discharge.

Connecting equipment to the diagnostics connection can lead to emissions monitoring information being reset, for example. This may lead to the vehicle failing to meet the requirements of the next emissions test during the main inspection.

Qualified specialist workshop

A qualified specialist workshop has the necessary special skills, tools and qualifications to correctly carry out any necessary work on your vehicle. This particularly applies to work relevant to safety.

Observe the notes in the Service Booklet.

Always have the following work carried out at a qualified specialist workshop:

- work relevant to safety
- service and maintenance work
- repair work
- modifications, installations and conversions
- work on electronic components

Mercedes-Benz recommends that you use a Mercedes-Benz Service Centre.

Vehicle registration

Mercedes-Benz may ask its Service Centres to carry out technical inspections on certain vehicles. The quality or safety of the vehicle is improved as a result of the inspection.

Mercedes-Benz can inform you about vehicle inspections only if it has your registration data.

It is possible that your vehicle has not yet been registered in your name in the following cases:

- if your vehicle was not purchased at an authorised specialist dealer.
- if your vehicle has not yet been inspected at a Mercedes-Benz Service Centre.

It is advisable to register your vehicle with a Mercedes-Benz Service Centre.

Inform Mercedes-Benz as soon as possible about any change in address or vehicle ownership. You can do this at a Mercedes-Benz Service Centre, for example.

Correct use

If you remove any warning stickers, you or others could fail to recognise certain dangers. Leave warning stickers in position.

Observe the following information when driving your vehicle:

- the safety notes in this manual
- technical data for the vehicle
- traffic rules and regulations
- laws and safety standards pertaining to motor vehicles

Implied warranty

! Follow the instructions in this manual about the proper operation of your vehicle as well as about possible vehicle damage. Damage to your vehicle that arises from culpable contraventions against these instructions are not covered either by Mercedes-Benz implied warranty or by the New or Used-Vehicle Warranty.

QR code for rescue card

The QR code is secured in the fuel filler flap and on the opposite side on the B-pillar. In the event of an accident, rescue services can use the QR code to quickly find the appropriate rescue card for your vehicle. The current rescue card contains, in a compact form, the most important information about your vehicle, e.g. the routing of the electric cables.

You can find more information under www.mercedes-benz.de/qr-code.

Data stored in the vehicle

Information from electronic control units

Your vehicle is fitted with electronic control units. Some of them are essential for ensuring that your vehicle runs safely, while others assist you with driving (driver assistance systems). Your vehicle also offers a range of comfort and entertainment functions, which are also enabled by means of electronic control units.

Electronic control units contain data memories that can store, either temporarily or permanently, technical information about the vehicle's operating state, component stress, maintenance requirements and technical events and errors.

This information generally documents the state of a component, module, system or the surroundings, such as:

- Operating conditions of system components (e.g. levels, battery status, tyre pressure)
- Status messages concerning the vehicle or its individual components (e.g. wheel revolution number / speed, deceleration in movement, lateral acceleration, display showing fastened belts)
- Malfunctions and defects in key system components (e.g. lights, brakes)
- Information on vehicle-damaging events
- System responses in special driving situations (e.g. airbag deployment, intervention of stability control systems)
- Ambient conditions (e.g. temperature, rain sensor)

In addition to implementing the control unit function of the vehicle, these data are used by

the manufacturer to identify and rectify faults and optimize vehicle functions. Most of these data are stored in a volatile memory and processed only in the vehicle itself. Only a small amount of these data are stored in event or fault memories.

If you want to make use of service activities, the technical data can be read from the vehicle by ServiceNetwork employees or by third parties. Service activities include repairs, maintenance, warranty claims and quality assurance measures. The data are read via the legally prescribed OBD ("on-board diagnostics") connection in the vehicle. The ServiceNetwork centres or third parties collect, process and use the data. The data documents the technical condition of the vehicle, provides assistance for troubleshooting and improving quality and is sometimes sent to the manufacturer. The manufacturer is also subject to product liability, for which the manufacturer needs access to technical data from vehicles.

Fault memories in the vehicle can be reset during repairs or maintenance work carried out by a service outlet.

Depending on the chosen equipment, you can add data yourself to the various vehicle comfort and infotainment functions.

These include:

- Multimedia data such as music, films or photos for playback on an integrated multimedia system
- Address book data for use in connection with an integrated hands-free system or integrated navigation system
- Entered destinations
- Data concerning use of internet services

These data are stored either locally in the vehicle or on a device connected to the vehicle. If these data are stored in the vehicle, you can delete it at any time. These data are transferred to third parties only if you explicitly request this; in the case of online services in particular, whether or not your data are transferred depends on your chosen settings.

You can store convenience settings / custom settings in the vehicle and change these at any time.

Depending on the equipment, these settings include:

- Seat and steering wheel position settings
- Chassis and air-conditioning settings
- Custom settings such as interior lighting

If your vehicle contains the necessary equipment, you can connect your smartphone or another mobile end device to your vehicle. You can then operate this device via the controls integrated in the vehicle. The image and sound on your smartphone, for example, can be output via the multimedia system. At the same time, you can have specific information sent to your smartphone.

Depending on the type of integration, such information includes:

- General vehicle data
- Position data

This allows you to use selected apps on your smartphone, such as navigation or music playback. No further interaction between the smartphone and vehicle – in particular, active access to vehicle data – takes place. The form in which data are further processed is determined by the provider of the app in question. Whether you can apply any settings at all and, if so, which settings you can apply depends on the app and your smartphone's operating system.

Service providers

Wireless network connection

If your vehicle has a wireless network connection, you can share data between your vehicle and other systems. The wireless network connection is enabled by either an in-vehicle transmitter and receiver or your own mobile end device (e.g. smartphone). This wireless network connection allows you to use online functions including online services and apps provided by the manufacturer or other providers.

Services provided by the manufacturer

In the case of online services provided by the manufacturer, the manufacturer describes the various functions at a suitable point and the associated data privacy information. Personal data may be required in order for you to use online services. Data are exchanged via a secure connection (e.g. using the IT system specially

provided for this purpose by the manufacturer). Any collection, processing or use of personal data beyond the purpose simply of providing services takes place only on the basis of a legal permit or consent.

You can normally activate or deactivate the services and functions (some of which are subject to a fee). In some cases, this also applies to the entire data connection system in the vehicle. However, this does not apply in particular to legally prescribed functions and services such as the "eCall" emergency call system.

Third-party services

If it is possible to use online services from third-party providers, these services are the responsibility of and subject to the data privacy and terms of use of the provider in question. The manufacturer has no influence on the content that is shared.

For this reason, please contact the service provider to find out about the type, scope and purpose of the collection and use of personal data when you use third-party services.

Copyright information

Information on licences for free and open-source software used in your vehicle can be found on the data carrier in your vehicle document wallet and, including updates, on the following website:

http://www.mercedes-benz.com/opensource

Cockpit

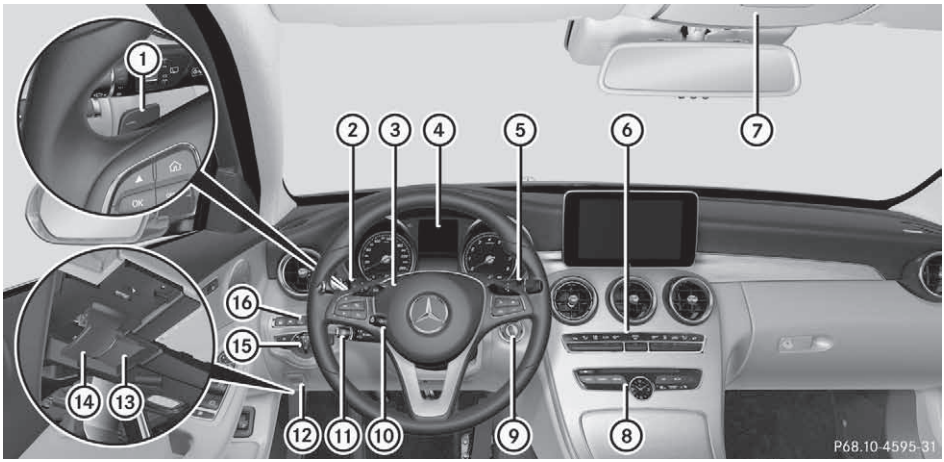

	Function	Page
①	Steering wheel gearshift paddles	171
②	Combination switch	123
③	Horn	
④	Instrument cluster	38
⑤	DIRECT SELECT lever	166
⑥	Climate control systems	136
⑦	Overhead control panel	43
⑧	Control panel for multimedia system and vehicle functions	40
⑨	Ignition lock Start/Stop button	153 154
⑩	Adjusts the steering wheel	113
⑪	Cruise control lever	188
⑫	Electric parking brake	181

	Function	Page
⑬	Diagnostics connection	32
⑭	Opens the bonnet	342
⑮	Light switch	121
⑯	Control panel for: Activating Distance Pilot DISTRONIC with Steering Pilot Activating Active Lane Keeping Assist Deactivates Parking Assist PARKTRONIC Switching on the 360° camera Switching on the head-up display Vehicles without a driver assistance system: card/coin holder	 198 231 212 217 244

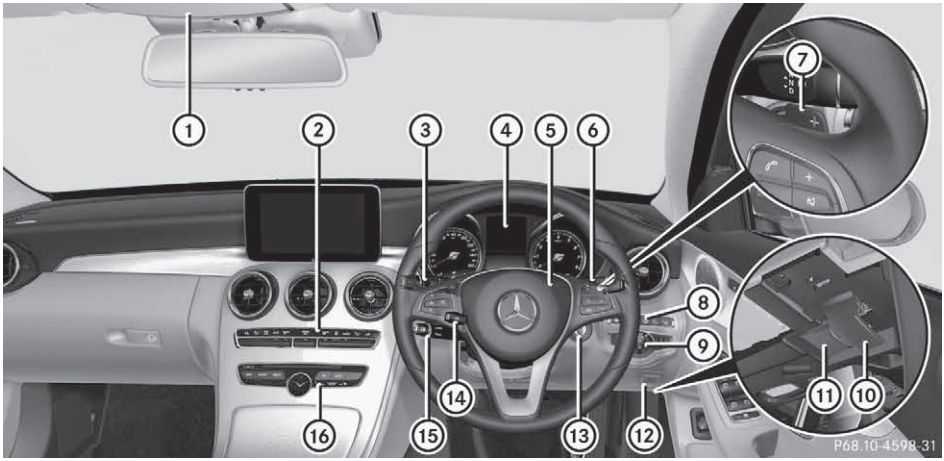

	Function	Page
①	Overhead control panel	43
②	Climate control systems	136
③	Combination switch	123
④	Instrument cluster	38
⑤	Horn	
⑥	DIRECT SELECT lever	166
⑦	Steering wheel gearshift paddles	171
⑧	Control panel for: Activating Distance Pilot DISTRONIC with Steering Pilot	198
	Activating Active Lane Keeping Assist	231
	Deactivating Parking Assist PARKTRONIC	212
	Switching on the 360° camera	217
	Switching on the head-up display	244
	Vehicles without driver assistance systems: card/coin holder	

	Function	Page
⑨	Light switch	121
⑩	Opens the bonnet	342
⑪	Diagnostics connection	32
⑫	Electric parking brake	181
⑬	Ignition lock Start/Stop button	153 154
⑭	Adjusts the steering wheel	113
⑮	Cruise control lever	188
⑯	Control panel for multimedia system and vehicle functions	40

Instrument cluster

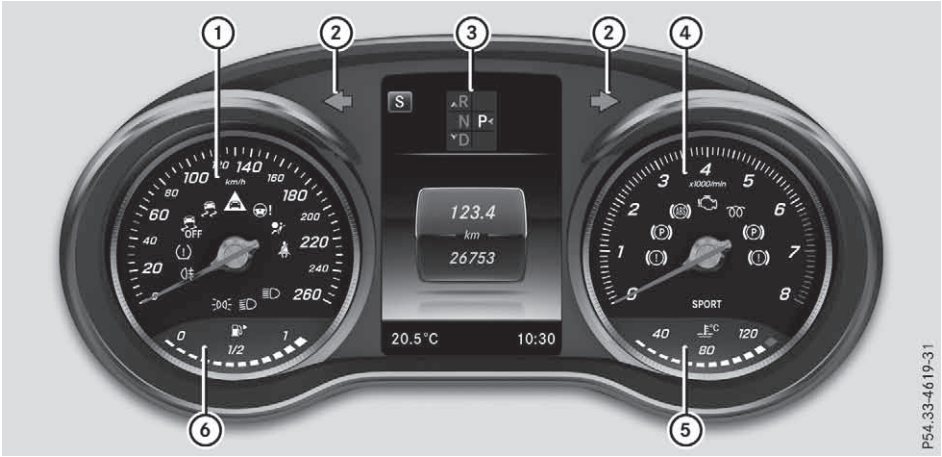

Instrument cluster with speedometer (km/h)

	Function	Page
①	Speedometer with segments	241
	Indicator and warning lamps:	
	ESP® OFF	298
	ESP®	298
	Distance warning	304
	Power steering assistance malfunctioning	306
	Restraint system	46
	Seat belt not fastened	295
	Main-beam headlamps	123
	Dipped-beam headlamps	122
	Side lamps	122
	Rear foglamp	122
	Tyre pressure monitor	305
②	Turn signals	123
③	Multifunction display	243
④	Rev counter	242
	Indicator and warning lamps:	
	Electric parking brake (yellow)	301
	ABS malfunctioning	298
	Engine diagnostics	302
	Diesel engine: preglow	155
	Electric parking brake applied (red)	301
	Brakes (red)	297
	SPORT handling mode (Mercedes-AMG vehicles)	300
	Brakes (yellow)	297
⑤	Coolant temperature display	242
	Indicator and warning lamp:	
	Coolant too hot/cold	302
⑥	Fuel gauge display	
	Indicator and warning lamp:	
	Fuel reserve with fuel filler flap location indicator (right-hand side)	302

Information on displaying the outside temperature on the multifunction display can be found under "Outside temperature display" (▷ page 242).

Multifunction steering wheel

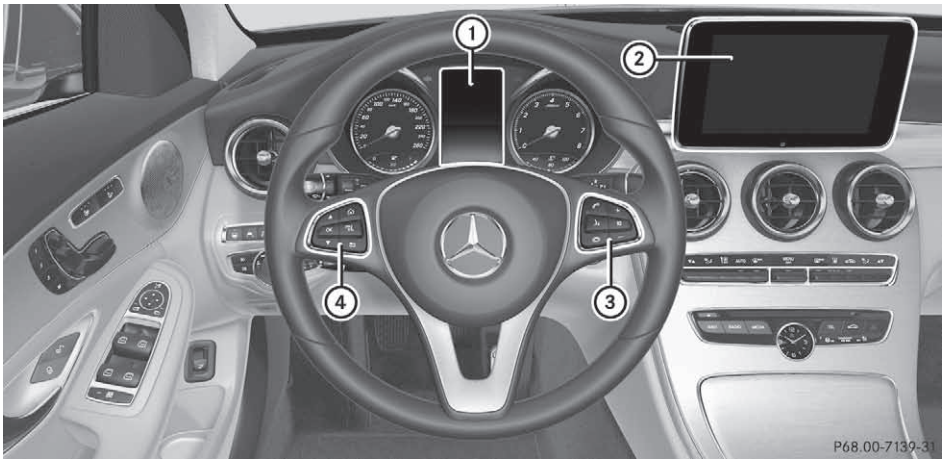

	Function	Page
①	Multifunction display	243
②	Multimedia system display	
③	Rejects or ends a call Makes or accepts a call Further telephone functions + – Adjusts the volume Mute Switches on voice-operated control for navigation or LINGUATRONIC	251

	Function	Page
④	Opens the menu list ▲ ▼ Selects a menu OK Confirms the selection Back Operates the on-board computer Switches on voice-operated control for navigation or LINGUATRONIC	242

Vehicles with Audio 20 multimedia system: you can find further information

- on the multimedia system in the Digital Owner's Manual
- on voice-operated control of the navigation system in the manufacturer's operating instructions

Vehicles with COMAND Online multimedia system: you can find further information

- on the multimedia system in the Digital Owner's Manual
- on the single DVD drive in the Digital Owner's Manual
- on LINGUATRONIC in the separate operating instructions

Centre console

Centre console, upper section

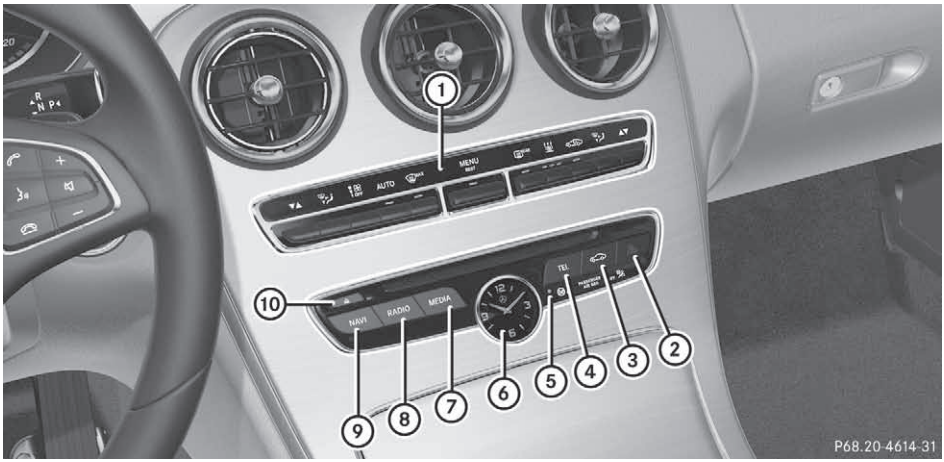

	Function	Page
①	Climate control systems	136
②	Hazard warning lamps	123
③	Vehicle functions/ system settings button (see Digital Owner's Manual)	
④	TEL Telephone button (see Digital Owner's Manual)	
⑤	PASSENGER AIRBAG indicator lamps ATA indicator lamp	46 82

	Function	Page
⑥	Analogue clock	
⑦	MEDIA Media button (see Digital Owner's Manual)	
⑧	RADIO Radio button (see Digital Owner's Manual)	
⑨	NAVI Navigation button (see Digital Owner's Manual)	
⑩	Inserts or ejects a CD or DVD (see Digital Owner's Manual)	

Centre console, lower section (except Mercedes-AMG vehicles)

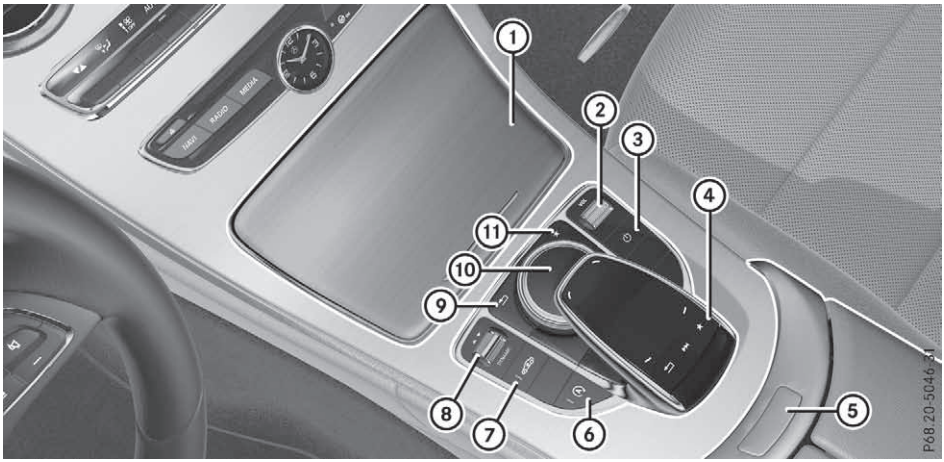

Vehicles with DIRECT SELECT lever

	Function	Page
①	Stowage compartment Ashtray Cigarette lighter Power socket Cup holders	320 334 334 335 331
②	Adjusts the volume Switches the sound on/off	308 308
③	Switches the multimedia system on/off	308
④	Touchpad	308
⑤	Opens stowage space with media interface	320
⑥	ECO start/stop function	157
⑦	Sets the vehicle level Deactivates Parking Assist PARKTRONIC	203 212
⑧	DYNAMIC SELECT switch	162
⑨	Back button	308
⑩	Controller	308
⑪	Favourites button	310

Centre console, lower section (Mercedes-AMG vehicles)

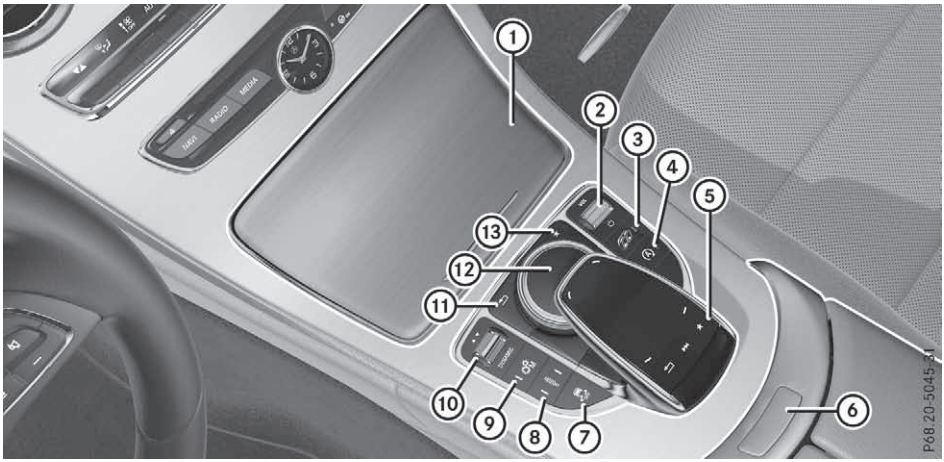

	Function	Page
①	Stowage compartment	320
	Ashtray	334
	Cigarette lighter	334
	Power socket	335
	Cup holders	331
②	Adjusts the volume	308
	Switches the sound on/off	308
	Vehicles with AMG Performance exhaust system:	
	⏻ Switches the multimedia system on/off	308
③	AMG switchable performance exhaust system	160
	⏻ Switches the multimedia system on/off	308
④	Ⓐ ECO start/stop function	157
⑤	Touchpad	308

	Function	Page
⑥	Opens stowage space with media interface	320
⑦	OFF Activates/deactivates ESP®	77
	SPORT Activates/deactivates SPORT handling mode	77
⑧	AMG RIDE CONTROL (suspension tuning)	204
⑨	Manual gearshifting (permanent setting)	171
⑩	DYNAMIC SELECT switch (selects drive program)	162
⑪	⮌ Back button	308
⑫	Controller	308
⑬	★ Favourites button	310

Overhead control panel

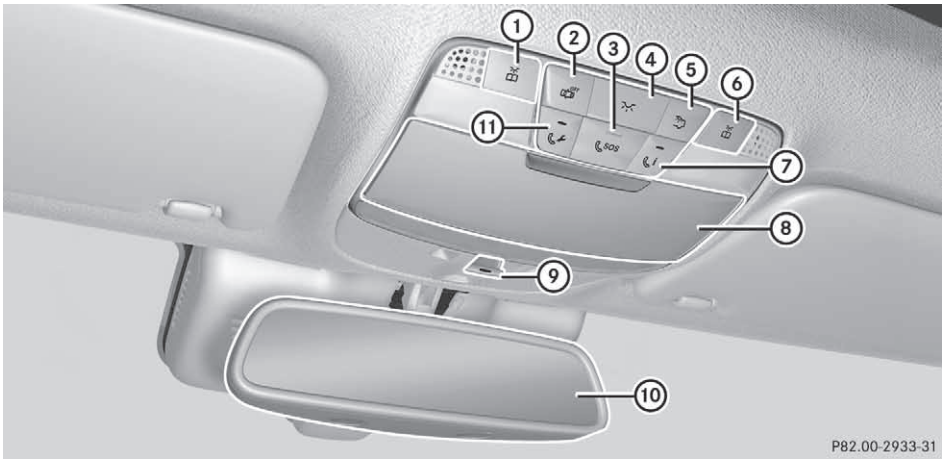

	Function	Page
①	Switches the left-hand reading lamp on/off	127
②	Switches the automatic interior lighting control on/off	127
③	SOS button	337
④	Switches the front interior lighting on/off	127
⑤	Switches the rear interior lighting on/off	127
⑥	Switches the right-hand reading lamp on/off	127

	Function	Page
⑦	Info call button	338
⑧	Spectacles compartment	321
⑨	Operates the panorama sliding sunroof Operates the roller sunblinds	103 104
⑩	Rear-view mirror Automatic anti-dazzle Manual anti-dazzle	 117 116
⑪	Breakdown assistance call button	338

Door control panel

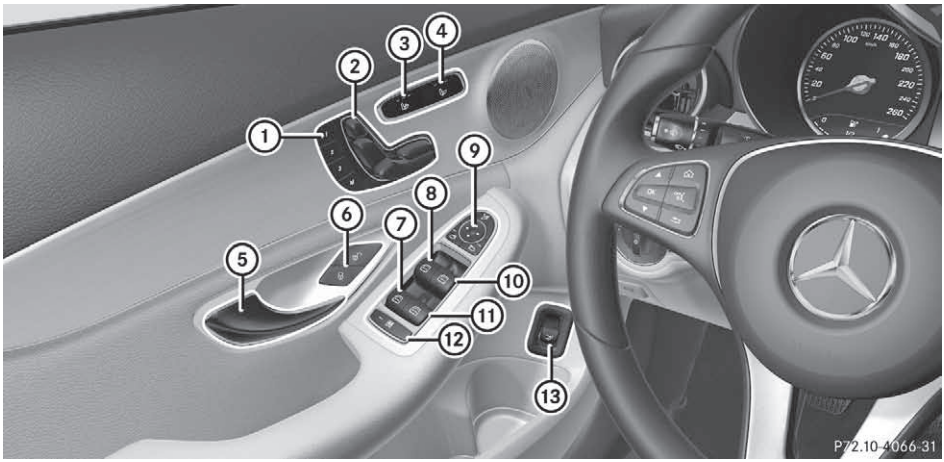

	Function	Page
①	M 1 2 3 Stores settings for the seat, exterior mirrors and steering column	119
②	Electric seat adjustment	109
③	Seat heating	112
④	Seat ventilation	113
⑤	Opens the door	91
⑥	Unlocks/locks the vehicle	92
⑦	Opens/closes the rear left side window	98
⑧	Opens/closes the left side window	98

	Function	Page
⑨	Adjusts and folds the exterior mirrors in/out electrically	116
⑩	Opens/closes the right side window	98
⑪	Opens/closes the rear right side window	98
⑫	Override feature for the controls in the rear compartment	71
⑬	Opens/closes the tailgate	97

Panic alarm

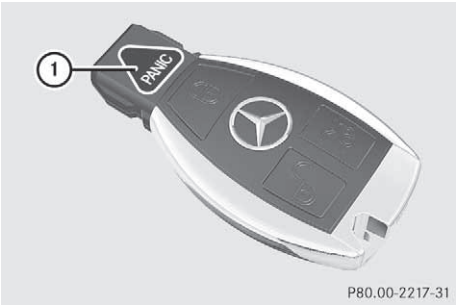

▶ **To activate:** press and hold the PANIC button ① for approximately one second.
A visual and audible alarm is triggered if the alarm system is activated.

▶ **To deactivate:** press the PANIC button ① again.

or

▶ Insert the key into the ignition lock.

or

▶ **Vehicles with KEYLESS-GO start function or KEYLESS-GO:** press the Start/Stop button.
The key must be in the vehicle.

The panic alarm function is available only in certain countries.

Occupant safety

Introduction to the restraint system

The restraint system can reduce the risk of vehicle occupants coming into contact with parts of the vehicle's interior in the event of an accident. The restraint system can also reduce the forces to which vehicle occupants are subjected during an accident.

The restraint system includes the:

- seat belt system
- airbags
- child restraint system
- child seat securing system

The components of the restraint system work in conjunction with each other. They can only offer protection if all vehicle occupants always:

- have the seat belt correctly fastened (▷ page 48)
- have the seat and head restraint adjusted properly (▷ page 107)

As the driver, you must also make sure that the steering wheel is also adjusted properly. Observe the information on the correct driver's seat position (▷ page 107).

In addition, you must make sure that the airbags can inflate properly if they are deployed (▷ page 50).

An airbag supplements a correctly worn seat belt. As an additional safety device, the airbag increases the level of protection for vehicle occupants in the event of an accident. The airbags are not deployed, for example, in the event of an accident in which sufficient protection is offered by the seat belt. In addition, only those airbags, which in the applicable accident situations offer additional protection, are deployed in the event of an accident. However, the seat belt and airbag generally do not protect against objects penetrating the vehicle from the outside.

Information on how the restraint system operates can be found under "Deployment of belt tensioners and airbags" (▷ page 57).

See "Children in the vehicle" for information on children travelling with you in the vehicle as well as on child restraint systems (▷ page 60).

Important safety notes

⚠ WARNING

If the restraint system is modified, it may no longer work as intended. The restraint system may then not perform its intended protective function by failing in an accident or triggering unexpectedly, for example. There is an increased risk of injury, possibly even fatal.

Never modify parts of the restraint system. Do not attempt to modify the wiring as well as electronic components or their software.

If it is necessary to adjust the vehicle to accommodate a person with disabilities, contact a qualified specialist workshop.

Mercedes-Benz recommends that you only use driving aids which have been approved specifically for your vehicle by Mercedes-Benz.

Restraint system warning lamp

The functions of the restraint system are checked after the ignition is switched on and at regular intervals while the engine is running. Therefore, malfunctions can be detected in good time.

The restraint system warning lamp on the instrument cluster lights up when the ignition is switched on. It goes out no later than a few seconds after the vehicle is started. The components of the restraint system are in operational readiness.

A malfunction has occurred if the restraint system warning lamp:

- does not light up after the ignition is switched on
- does not go out after a few seconds with the engine running
- lights up again while the engine is running

⚠ WARNING

If the restraint system is malfunctioning, restraint system components may be triggered unintentionally or may not deploy as intended during an accident. This may affect the seat belt tensioner or airbag, for example. This poses an increased risk of injury or even fatal injury.

Have the restraint system checked and repaired immediately at a qualified specialist workshop.

PASSENGER AIR BAG indicator lamp

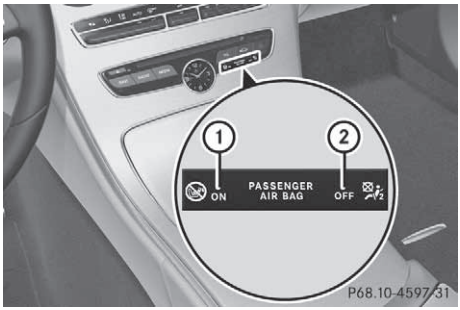

PASSENGER AIR BAG ON indicator lamp ① and PASSENGER AIR BAG OFF indicator lamp ② are part of the automatic deactivation system of the front-passenger front airbag.

The indicator lamps display the status of the front-passenger front airbag.

- PASSENGER AIR BAG ON lights up for 60 seconds, then both indicator lamps are off (PASSENGER AIR BAG ON and OFF): the front-passenger front airbag is able to deploy in the event of an accident.
- PASSENGER AIR BAG OFF lights up: the front-passenger front airbag is disabled. It will then not be deployed in the event of an accident.

If the PASSENGER AIR BAG ON indicator lamp is off, only the PASSENGER AIR BAG OFF indicator lamp shows the status of the front-passenger front airbag. The PASSENGER AIR BAG OFF indicator lamp may be lit continuously or be off.

Depending on the person in the front-passenger seat, the front-passenger front airbag must be either disabled or enabled; see the following points. You must make sure of this both before and during a journey.

- **Children in a rearward-facing child restraint system:** the PASSENGER AIR BAG OFF indicator lamp must be lit. The front-passenger front airbag is disabled. Make sure that you read the notes on the "Automatic front-passenger front airbag deactivation system" (▷ page 53) and on "Children in the vehicle" (▷ page 60).
- **Children in a forward-facing child restraint system:** depending on the installed child restraint system and the age and size of the child, the front-passenger front airbag is either disabled or enabled. Therefore, make sure that you read the notes on the "Automatic front-passenger front airbag deactiva-

tion system" (▷ page 53) and on "Children in the vehicle" (▷ page 60).

- **All other persons:** the PASSENGER AIR BAG OFF indicator lamp must be off. The front-passenger front airbag is enabled. Depending on the build of the person on the front-passenger seat, the PASSENGER AIR BAG OFF indicator lamp may light up. The front-passenger front airbag is disabled. It will then not be deployed in the event of an accident. In this case, the front-passenger seat should not be used.

  Make sure that you read the notes on the "Automatic front-passenger front airbag deactivation system" (▷ page 53) as well as on "Seat belts" (▷ page 47) and "Airbags" (▷ page 50). There, you can also find information on the correct seat position.

Seat belts

Introduction

A correctly worn seat belt is the most effective means of restraining the movement of vehicle occupants in the event of a collision or if the vehicle overturns. This reduces the risk of vehicle occupants coming into contact with parts of the vehicle interior or being ejected from it. The seat belt also helps to keep the vehicle occupants in the best position in relation to the airbag being deployed.

The seat belt system consists of:

- seat belts
- belt tensioners for the front seat belts and the outer seat belts in the rear
- belt force limiters for the front seat belts and the outer seat belts in the rear

If the seat belt is pulled quickly or sharply from the belt outlet, the inertia reel locks. The belt strap cannot be pulled out any further.

The belt tensioner tightens the seat belt in the event of a collision so that it fits tightly across your body. However, it does not pull the vehicle occupants back in the direction of the seat backrest.

The belt tensioner does not, however, correct an incorrect seat position or correct the routing of a seat belt that is worn incorrectly.

If the seat belt is also fitted with a belt force limiter and this is triggered, the force exerted by the seat belt on the vehicle occupant is reduced.

The belt force limiters on the front seats are synchronised with the front airbags, which take on a part of the deceleration force. This can reduce the forces to which the vehicle occupants are subjected during an accident.

! If the front-passenger seat is not occupied, do not engage the seat belt tongue in the buckle on the front-passenger seat. Otherwise, the belt tensioner and sidebag could be triggered in the event of an accident and would need to be replaced.

Important safety notes

⚠ WARNING

If the seat belt is worn incorrectly, it cannot perform its intended protective function. Furthermore, an incorrectly worn seat belt can cause additional injuries, e.g. in the event of an accident, heavy braking or sudden changes of direction. There is an increased risk of injury, possibly even fatal.

Always ensure that all vehicle occupants have their seat belts fastened correctly and are sitting properly.

The components of the restraint system work in conjunction with each other. They can only offer protection if all vehicle occupants always:

- have the seat belt correctly fastened (▷ page 48)
- have the seat and head restraint adjusted properly (▷ page 107)

⚠ WARNING

The seat belt does not offer the intended level of protection if you have not moved the backrest to an almost vertical position. When braking or in the event of an accident, you could slide underneath the seat belt and sustain abdomen or neck injuries, for example. This poses an increased risk of injury or even fatal injury.

Adjust the seat properly before beginning your journey. Always ensure that the backrest is in an almost vertical position and that the shoulder section of your seatbelt is routed across the centre of your shoulder.

⚠ WARNING

Persons under 1.50 m tall cannot wear the seat belts correctly without an additional suitable restraint system. If the seat belt is worn incorrectly, it cannot perform its intended protective function. Furthermore, an incorrectly worn seat belt can cause additional injuries, e.g. in the event of an accident, heavy braking or sudden changes of direction. There is an increased risk of injury, possibly even fatal.

Always secure persons less than 1.50 m tall in additional suitable restraint systems.

If a child younger than twelve years old and under 1.50 m in height is travelling in the vehicle:

- always secure the child in a child restraint system suitable for this Mercedes-Benz vehicle. The child restraint system must be appropriate to the age, weight and size of the child
- be sure to observe the instructions and safety notes on the "Automatic front-passenger front airbag deactivation system" (▷ page 53)
- be sure to observe the instructions and safety notes on "Children in the vehicle" (▷ page 60) in addition to the manufacturer's operating and installation instructions for the child restraint system

⚠ WARNING

Seat belts cannot protect as intended, if:

- they are damaged, have been modified, are extremely dirty, bleached or dyed
- the seat belt buckle is damaged or extremely dirty
- modifications have been made to the belt tensioners, belt anchorages or inertia reels

Seat belts may sustain non-visible damage in an accident, e.g. due to glass splinters. Modified or damaged seat belts can tear or fail, for example in the event of an accident. Modified seat belt tensioners may be deployed unintentionally or not function as intended. There is an increased risk of injury, possibly even fatal.

Never modify seat belts, seat belt tensioners, seat belt anchorages and inertia reels. Ensure that seat belts are not damaged or worn and are clean. After an accident, have the seat belts checked immediately at a qualified specialist workshop.

Mercedes-Benz recommends that you only use seat belts that have been approved specifically for your vehicle by Mercedes-Benz. Otherwise, your vehicle's general operating permit could be invalidated.

AMG Performance seat: this seat is designed for the standard three-point seat belt. If you fit another multipoint seat belt, e.g. sport or racing seat belts, the restraint system cannot provide the best level of protection.

⚠ WARNING

If you feed seat belts through the opening in the seat backrest, the seat backrest may be damaged or may even break in the event of an accident. This poses an increased risk of injury or even fatal injury.

Only use the standard three-point seat belt. Never modify the seat belt system.

Correct seat belt use

Observe the safety notes on the seat belt (▷ page 47).

All vehicle occupants must be wearing the seat belt correctly before beginning the journey. Also make sure that all vehicle occupants are always wearing the seat belt correctly while the vehicle is in motion.

When fastening a seat belt, always make sure that:

- the seat belt buckle tongue is inserted only into the belt buckle belonging to that seat
- the seat belt is pulled tight across the body
  Avoid wearing bulky clothing, e.g. a winter coat.
- the seat belt is not twisted
  Only then can any forces that occur be distributed across the surface of the seat belt.
- the shoulder section of the belt is routed across the centre of the shoulder
  The shoulder section of the seat belt should not touch your neck or be routed under your

arm or behind your back. If possible, adjust the seat belt to the appropriate height.

- the lap belt is taut and passes across the lap as low down as possible

  The lap belt must always be routed across your hip joints and never across your abdomen. This applies particularly to pregnant women. If necessary, press the lap belt down into your hip joints and pull tight with the shoulder section of the belt.
- the seat belt is not routed across sharp, pointed or fragile objects

  If you have such items located on or in your clothing, e.g. pens, keys or spectacles, store these in a suitable place.
- only one person is using a seat belt

  Infants and children must never travel sitting on the lap of a vehicle occupant. In the event of an accident, they could be crushed between the vehicle occupant and seat belt.
- objects are never secured with a seat belt if the seat belt is also being used by one of the vehicle's occupants

  Also ensure that no objects are placed between a person and the seat. e.g. a cushion.

Seat belts are intended only to secure and restrain vehicle occupants. Always observe the "Loading guidelines" for securing objects, luggage or loads (▷ page 320).

Fastening and adjusting the seat belts

Observe the safety notes on the seat belt (▷ page 47) and the information on the correct use of the seat belt (▷ page 48).

If a passenger is wearing the centre rear seat belt, also observe the information on the seat belt for the centre rear seat (▷ page 49).

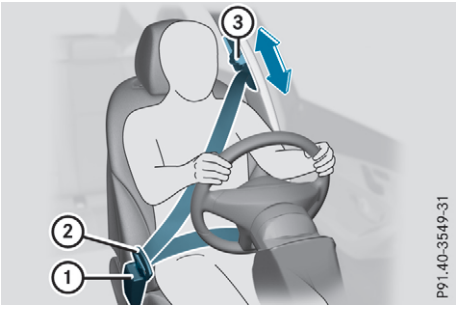

Basic illustration

▶ Adjust the seat (▷ page 107).
The seat backrest must be in an almost upright position.

▶ Pull the seat belt smoothly from the belt outlet and engage belt tongue ② in belt buckle ①.
The seat belt on the driver's seat and the front-passenger seat may be tightened automatically; see "Belt adjustment" (▷ page 50).

▶ If necessary, pull upwards on the seat belt in front of your chest so that the belt sits tightly across your body.

The shoulder section of the seat belt must always be routed across the centre of the shoulder. Adjust the belt outlet if necessary.

▶ **To raise:** slide the belt outlet upwards.
The belt outlet will engage in various positions.

▶ **To lower:** hold belt outlet release ③ and slide the belt outlet downwards.

▶ Let go of belt outlet release ③ in the desired position and make sure that the belt outlet engages.

Seat belt for the centre rear seat

If the left-hand rear seat backrest is folded down and back up again, the rear centre seat belt may lock. The seat belt can then not be pulled out.

▶ **To release the rear centre seat belt:** pull the seat belt out approximately 20 mm at the belt outlet on the backrest and then release it again.
The seat belt is retracted and released.

Releasing seat belts

! Make sure that the seat belt is fully rolled up. Otherwise, the seat belt or belt tongue will be trapped in the door or in the seat mechanism. This could damage the door, the door trim panel and the seat belt. Damaged seat belts can no longer fulfil their protective function and must be replaced. Visit a qualified specialist workshop.

▶ Press release button in belt buckle, hold belt tongue firmly and guide the seat belt back.

Belt adjustment

Seat-belt adjustment is an integral part of the PRE-SAFE® convenience function. With this function, the driver's and co-driver's seat belts are adjusted to the upper body of the vehicle occupant.

The belt strap is tightened slightly when:

- the belt tongue is engaged in the buckle and
- the ignition is switched on

The seat belt adjustment will apply a certain tightening force if any slack is detected between the vehicle occupant and the seat belt. Do not hold on to the seat belt tightly while it is adjusting.

You can switch the seat belt adjustment on and off using the multimedia system. Information on switching the seat belt adjustment on and off can be found in the Digital Operating Instructions.

Seat belt warning for the driver and front-passenger

The seat belt warning lamp in the instrument cluster is a reminder that all vehicle occupants must wear their seat belts. It may light up continuously or flash. In addition, a warning tone may sound.

The seat belt warning lamp goes out and the warning tone ceases when the driver and the front passenger have fastened their seat belts.

Rear seat belt status indicator



The rear seat belt status indicator is available only in certain countries.

The rear seat belt status indicator informs you which rear seat belt is not fastened.

Cancelling the rear seat belt status indicator immediately (▷ page 262).

Airbags

Introduction

The installation location of an airbag is identified by the AIRBAG symbol.

An airbag supplements a correctly worn seat belt. It is not a replacement for the seat belt. The airbag offers additional protection in corresponding accident situations.

Not all airbags are deployed in an accident. The different airbag systems work independently of each other (▷ page 57).

However, no system available today can completely eliminate injuries and fatalities.

It is also not possible to completely rule out a risk of injury caused by an airbag due to the speed at which the airbag must be deployed.

Important safety notes

⚠ WARNING

If you deviate from the correct seat position, the airbag cannot perform its intended protective function and can even cause additional injuries when deployed. There is an increased risk of serious or even fatal injuries.

In order to avoid such risks, always ensure that all vehicle occupants:

- fasten their seatbelts correctly, including pregnant women
- are seated correctly and maintain the furthest possible distance from the airbags
- observe the following notes

Always ensure that there are no objects located between the airbag and the vehicle occupant.

- Adjust the seats properly before beginning your journey. Always make sure that the seat is in an almost upright position. The centre of the head restraint must support the head at about eye level.
- Move the driver's and front-passenger seats as far back as possible. The driver's seat position must allow the vehicle to be driven safely.
- Hold the steering wheel only by the rim. This allows the airbag to be fully deployed.
- Always lean against the backrest while driving. Do not lean forwards or lean against the

door or side window. You may otherwise be in the deployment area of the airbags.
- Always keep your feet in the footwell in front of the seat. Do not put your feet on the dashboard, for example. Your feet may otherwise be in the deployment area of the airbag.
- Always secure persons less than 1.50 m tall in suitable restraint systems. Up to this height, the seat belt cannot be worn correctly.

If a child is travelling in your vehicle, also observe the following notes:

- Always secure children under twelve years of age and less than 1.50 m tall in suitable child restraint systems.
- Child restraint systems should preferably be fitted to the rear seats.
- Secure a child to the front-passenger seat only when the front-passenger front airbag is disabled, and then only in a rearward-facing child restraint system. If the PASSENGER AIR BAG OFF indicator lamp is permanently lit, the front-passenger front airbag is disabled (▷ page 46).
- Be sure to observe the instructions and safety notes on the "Automatic front-passenger front airbag deactivation system" (▷ page 53) and on "Children in the vehicle" (▷ page 60) in addition to the manufacturer's operating and installation instructions for the child restraint system.

Objects in the vehicle interior may prevent the airbag from functioning correctly. Before starting your journey and to avoid risks resulting from the speed of the airbag as it deploys, make sure that:

- there are no people, animals or objects between the vehicle occupants and an airbag
- there are no objects between the seat, door and B-pillar
- there are no hard objects, e.g. coat hangers, hanging on the grab handles or coat hooks
- no accessories, such as cup holders, are attached to the vehicle within the deployment area of an airbag, e.g. to doors, side windows, rear side trim or side walls
- no heavy, sharp-edged or fragile objects are in the pockets of your clothing. Store such objects in a suitable place.

⚠ WARNING

If you modify an airbag cover or affix objects such as stickers to it, the airbag can no longer function correctly. There is an increased risk of injury.

Never modify an airbag cover or affix objects to it.

⚠ WARNING

Sensors to control the airbags are located in the doors. Modifications or work not performed correctly to the doors or door panelling, as well as damaged doors, can lead to the function of the sensors being impaired. The airbags might therefore not function properly any more. Consequently, the airbags cannot protect vehicle occupants as they are designed to do. This poses an increased risk of injury.

Never modify the doors or parts of the doors. Always have work on the doors or door panelling carried out at a qualified specialist workshop.

Front airbags

! Do not place heavy objects on the front-passenger seat. This could cause the system to identify the seat as being occupied. In the event of an accident, the restraint systems on the front-passenger side may be triggered and have to be replaced.

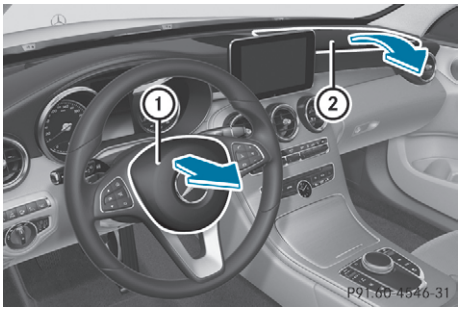

Driver's airbag ① deploys in front of the steering wheel. Front-passenger front airbag ② deploys in front of and above the glove compartment.

When deployed, the front airbags offer additional head and thorax protection for the occupants in the front seats.

The PASSENGER AIR BAG OFF indicator lamp informs you about the status of the front-passenger front airbag (▷ page 46).

The front-passenger front airbag will deploy only if:

- the automatic front-passenger front airbag deactivation system has detected that the front-passenger seat is occupied (▷ page 53). The PASSENGER AIR BAG OFF indicator lamp is not lit (▷ page 53)
- the restraint system control unit predicts a high accident severity

Driver's kneebag



Driver's kneebag ① deploys under the steering column. The driver's kneebag is triggered together with the front airbags.

The driver's kneebag offers additional thigh, knee and lower leg protection for the occupant in the driver's seat.

ⓘ The driver's kneebag is only available in certain countries.

Sidebags

⚠ **WARNING**

Unsuitable seat covers may obstruct or even prevent deployment of the airbags integrated into the seats. The airbags may then fail to protect the vehicle occupants as intended. Operation of the automatic co-driver's front airbag deactivation system may also be impaired. There is an increased risk of injury, possibly even fatal.

Use only seat covers which have been specifically approved for the respective seat by Mercedes-Benz.

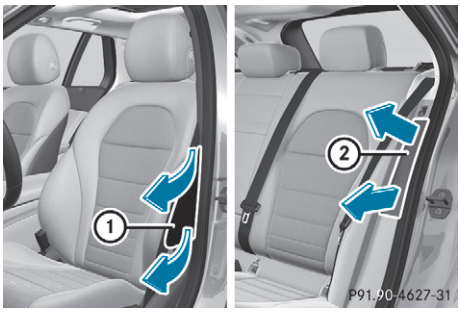

Front sidebags ① and rear sidebags ② deploy next to the outer bolster of the seat backrest.

When deployed, the sidebag offers additional thorax protection. However, it does not protect the:

- head
- neck
- arms

When the restraint system control unit detects a side impact, the sidebag is deployed on the side on which the impact occurs.

Vehicles with the automatic front-passenger front airbag deactivation system: the sidebag on the front-passenger side deploys under the following conditions:

- an occupant is detected in the front-passenger seat or
- the seat belt buckle tongue is engaged in the belt buckle of the front-passenger seat

If the belt tongue is engaged in the belt buckle, the sidebag on the front-passenger side deploys if an appropriate accident situation occurs. In this case, deployment is independent of whether the front-passenger seat is occupied or not.

Windowbags

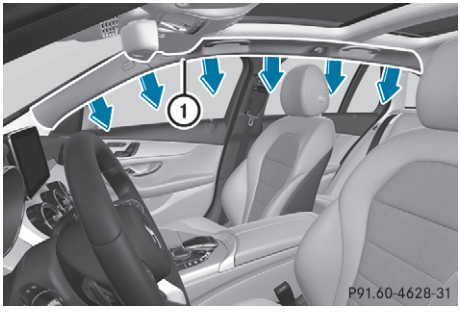

Windowbags ① are integrated in the side of the roof frame and deploy in the area from the A-pillar to the C-pillar.

When deployed, the windowbag enhances the level of protection for the head. However, it does not protect the chest or arms.

When the restraint system control unit detects a side impact, the windowbag is deployed on the side on which the impact occurs.

If the system determines that it can offer additional protection to that provided by the seat belt, a windowbag may be deployed in other accident situations (▷ page 57).

Automatic front-passenger front airbag deactivation

Introduction

In order to recognise a child restraint system on the front-passenger seat, the automatic front-passenger front airbag deactivation system categorises the person in the front-passenger seat. Depending on that result, the front-passenger front airbag is either enabled or disabled. If a rearward-facing child restraint system is fitted to the front-passenger seat, the PASSENGER AIR BAG OFF indicator lamp must light up after the system self-test and remain lit. The front-passenger front airbag is disabled.

The system does not disable:

- the sidebag
- the windowbag
- the seat belt tensioner

Make sure that your vehicle is equipped with the automatic front-passenger front airbag deactivation system (▷ page 64). If this is not the case, always install a child restraint system on a suitable rear seat (▷ page 65).

If it is absolutely necessary to install a child restraint system on the front-passenger seat, be sure to observe the correct positioning of the child restraint system. Never place objects under or behind the child restraint system, e.g. a cushion. Fully retract the seat cushion length. The entire base of the child restraint system must always rest on the seat cushion of the front-passenger seat. The backrest of a forward-facing child restraint system must, as far as possible, rest flat against the backrest of the front-passenger seat. The child restraint system must not touch the roof or be put under strain by the head restraint. Adjust the angle of the seat backrest and the head restraint position accordingly. Only then is the correct function of the automatic front-passenger front airbag deactivation system guaranteed. Always observe the information on suitable positioning of the child restraint system (▷ page 65) in addition to the child restraint system manufacturer's installation instructions.

Operation of automatic front-passenger airbag deactivation

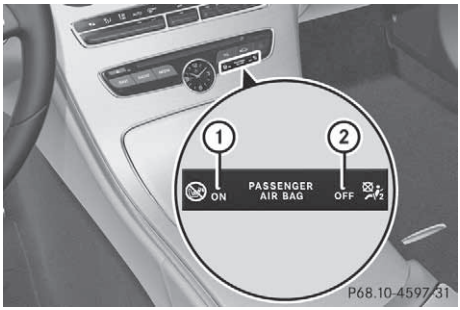

① PASSENGER AIR BAG ON indicator lamp
② PASSENGER AIR BAG OFF indicator lamp

The indicator lamps inform you whether the front-passenger front airbag is disabled or enabled.

▶ Press the Start/Stop button once or twice, or turn the key to position 1 or 2 in the ignition lock.
The system carries out a self-diagnosis.

The PASSENGER AIR BAG OFF and PASSENGER AIR BAG ON indicator lamps must light up simultaneously for approximately six seconds.

The indicator lamps display the status of the front-passenger front airbag:

- PASSENGER AIR BAG ON lights up for 60 seconds, then both indicator lamps are off (PASSENGER AIR BAG ON and OFF): the front-passenger front airbag is able to deploy in the event of an accident.
- PASSENGER AIR BAG OFF lights up: the front-passenger front airbag is disabled. It will then not be deployed in the event of an accident.

If the PASSENGER AIR BAG ON indicator lamp is off, only the PASSENGER AIR BAG OFF indicator lamp shows the status of the front-passenger front airbag. The PASSENGER AIR BAG OFF indicator lamp may be lit continuously or be off.

If the status of the front-passenger front airbag changes while the vehicle is in motion, an airbag display message appears on the instrument cluster (▷ page 273). When the front-passenger seat is occupied, always pay attention to the PASSENGER AIR BAG OFF indicator lamp. Be aware of the status of the front-passenger front airbag both before and during the journey.

If a person sits in the front-passenger seat, they must be:

- seated with the seat belt fastened correctly
- in an almost upright position with their back against the seat backrest
- with their feet resting on the floor, if possible

If the front passenger does not observe these conditions, the automatic front-passenger front airbag deactivation system may be influenced, e.g. because the front passenger:

- transfers their weight by supporting themselves on a vehicle armrest
- sits in such a way that their weight is raised from the seat cushion

The front-passenger front airbag may be disabled by mistake as a result of these or similar actions. In this case, the PASSENGER AIR BAG OFF indicator lamp lights up permanently. The front-passenger front airbag then does not deploy during an accident.

⚠ WARNING

If the PASSENGER AIRBAG OFF indicator lamp is lit, the front-passenger front airbag is disabled. It will not be deployed in the event of an accident and cannot perform its intended protective function. A person in the front-passenger seat could then, for example, come into contact with the vehicle's interior, especially if the person is sitting too close to the dashboard. This poses an increased risk of injury or even fatal injury.

When the front-passenger seat is occupied, always make sure that:

- the classification of the person in the front-passenger seat is correct and that the front-passenger front airbag is enabled or disabled in accordance with the person in the front-passenger seat.
- the front-passenger seat has been moved back as far back as possible.
- the person is seated correctly.

Make sure, both before and during the journey, that the status of the front-passenger front airbag is correct.

⚠ WARNING

If you secure a child in a rearward-facing child restraint system on the co-driver's seat and the PASSENGER AIR BAG OFF indicator lamp is off, the co-driver's front airbag can deploy in the event of an accident. The child could be struck by the airbag. There is an increased risk of injury, possibly even fatal.

In this case, always make sure that the co-driver's front airbag has been disabled. The PASSENGER AIR BAG OFF indicator lamp must be lit.

If the PASSENGER AIR BAG OFF indicator lamp stays off, do not install a rearward-facing child restraint system on the front-passenger seat. Further information can be found under "Problems with the automatic front-passenger front airbag deactivation system" (▷ page 57).

⚠ WARNING

If you secure a child in a forward-facing child restraint system on the front-passenger seat and you position the front-passenger seat too close to the dashboard, in the event of an accident, the child could:

- come into contact with the vehicle's interior if the PASSENGER AIR BAG OFF indicator lamp is lit, for example
- be struck by the airbag if the PASSENGER AIR BAG OFF indicator lamp is off

This poses an increased risk of injury or even fatal injury.

Always move the front-passenger seat as far back as possible and fully retract the seat cushion length. Always make sure that the shoulder belt strap is correctly routed from the vehicle belt sash guide to the shoulder

belt guide on the child restraint system. The shoulder belt strap must be routed forwards and downwards from the vehicle belt sash guide. If necessary, adjust the vehicle belt sash guide and the front-passenger seat accordingly. Always observe the child restraint system manufacturer's installation instructions.

Always observe the vehicle-specific information for the correct positioning of the child restraint system (▷ page 65).

If the automatic front-passenger front airbag deactivation system detects that:

- the front-passenger seat is unoccupied, the PASSENGER AIR BAG OFF indicator lamp lights up after the system self-test and remains lit. This indicates that the front-passenger front airbag is disabled.
- the front-passenger seat is occupied by a child in a rearward-facing child restraint system, the PASSENGER AIR BAG OFF indicator lamp lights up after the system self-test and remains lit. This indicates that the front-passenger front airbag is disabled.

  But in the case of a child in a rearward-facing child restraint system, the PASSENGER AIR BAG OFF indicator lamp can also go out after the system self-test. This indicates that the front-passenger front airbag is enabled. The result of the classification is dependent on, among other factors, the child restraint system and the child's build. It is recommended that you fit the child restraint system to a suitable rear seat.
- the front-passenger seat is occupied by a child in a forward-facing child restraint system, either the PASSENGER AIR BAG OFF indicator lamp lights up and remains lit after the system self-test depending on the result of the classification, or it goes out. The result of the classification is dependent on, among other factors, the child restraint system and the child's build.

  Move the front-passenger seat as far back as possible. Always observe the information in "Child restraint systems on the front-passenger seat" (▷ page 64) and in "Suitable positioning of the child restraint system" (▷ page 65). Alternatively, you can fit the child restraint system to a suitable rear seat.
- the front-passenger seat is occupied by a person with a smaller build (e.g. a teenager or small adult), the PASSENGER AIR BAG OFF indicator lamp lights up and remains lit after the system self-test depending on the result of the classification or, alternatively, goes out.
  - If the PASSENGER AIR BAG OFF indicator lamp is off, move the front-passenger seat as far back as possible. Alternatively, a person with a small build can sit on a rear seat.
  - If the PASSENGER AIR BAG OFF indicator lamp is lit, a person with a smaller build should not use the front-passenger seat.
- the front-passenger seat is occupied by an adult or a person with the build of an adult, the PASSENGER AIR BAG OFF indicator lamp goes out after the system self-test. This indicates that the front-passenger front airbag is enabled.

If children are travelling in the vehicle, be sure to observe the notes on "Children in the vehicle" (▷ page 60).

If the automatic front-passenger front airbag deactivation system is malfunctioning, the red restraint system warning lamp on the instrument cluster and the PASSENGER AIR BAG OFF indicator lamp light up simultaneously. The front-passenger front airbag is disabled in this case and does not deploy during an accident. Have the automatic front-passenger front airbag deactivation system checked and repaired immediately at a qualified specialist workshop. Mercedes-Benz recommends that you use a Mercedes-Benz Service Centre for this purpose.

If the front-passenger seat, the seat cover or the seat cushion are damaged, have the necessary repair work carried out at a qualified specialist workshop. Mercedes-Benz recommends that you use a Mercedes-Benz Service Centre for this purpose.

For safety reasons, Mercedes-Benz recommends that you use only a child restraint system that has been tested and approved by Mercedes-Benz in combination with the automatic front-passenger front airbag deactivation system.

System self-test

⚠ DANGER

If both the PASSENGER AIR BAG OFF and PASSENGER AIR BAG ON indicator lamps do

not light up during the system self-test, the system is malfunctioning. The front-passenger front airbag might be triggered unintentionally or might not be triggered at all in the event of an accident with high deceleration. This poses an increased risk of injury or even fatal injury.

In this case the front-passenger seat may not be used. Do not install a child restraint system on the front-passenger seat. Have the automatic front-passenger front airbag deactivation system checked and repaired immediately at a qualified specialist workshop.

⚠ WARNING

If the PASSENGER AIRBAG OFF indicator lamp remains lit after the system self-test, the front-passenger front airbag is disabled. It will not be deployed in the event of an accident. In this case, the front-passenger front airbag cannot perform its intended protective function, e.g. when a person is seated in the front-passenger seat.

That person could, for example, come into contact with the vehicle's interior, especially if the person is sitting too close to the dashboard. This poses an increased risk of injury or even fatal injury.

When the front-passenger seat is occupied, always ensure that:

- the classification of the person in the front-passenger seat is correct and the front-passenger front airbag is enabled or disabled in accordance with the person in the front-passenger seat.
- the person is seated properly with a correctly fastened seat belt.
- the front-passenger seat has been moved as far back as possible.

If the PASSENGER AIR BAG OFF indicator lamp remains lit when it should not, the front-passenger seat may not be used. Do not install a child restraint system on the front-passenger seat. Have the automatic front-passenger front airbag deactivation system checked and repaired immediately at a qualified specialist workshop.

⚠ WARNING

Objects between the seat surface and the child restraint system could affect the function of the automatic front-passenger front airbag deactivation system. This could result in the front-passenger front airbag not functioning as intended during an accident. This poses an increased risk of injury or even fatal injury.

Do not place any objects between the seat surface and the child restraint system. The entire base of the child restraint system must always rest on the seat cushion of the front-passenger seat. The backrest of the forwards-facing child restraint system must, as far as possible, be resting on the backrest of the rear reclining seat. Always comply with the child restraint system manufacturer's installation instructions.

After the system self-test, the PASSENGER AIR BAG OFF or PASSENGER AIR BAG ON indicator lamp displays the status of the front-passenger front airbag (▷ page 53). If the front-passenger front airbag is enabled, the PASSENGER AIR BAG ON indicator lamp lights up for 60 seconds and then goes out.

If the PASSENGER AIR BAG ON indicator lamp is off, only the PASSENGER AIR BAG OFF indicator lamp shows the status of the front-passenger front airbag. The PASSENGER AIR BAG OFF indicator lamp may be lit continuously or be off.

Further information can be found under "Problems with the automatic front-passenger front airbag deactivation system" (▷ page 57).

Problems with the automatic front-passenger front airbag deactivation system

Be sure to observe the notes on "System self-test" (▷ page 55).

Problem	Possible causes/consequences and ▶ Solutions
The PASSENGER AIR BAG OFF indicator lamp lights up and remains lit, even though the front-passenger seat is occupied by an adult or a person with a build corresponding to that of an adult.	The classification of the person on the front-passenger seat is false. ▶ Make sure the conditions for a correct classification of the person on the front-passenger seat are met (▷ page 53). ▶ If the PASSENGER AIR BAG OFF indicator lamp remains lit, the front-passenger seat may not be used. ▶ Have the automatic front-passenger front airbag deactivation system checked immediately at a qualified specialist workshop.
The PASSENGER AIR BAG OFF indicator lamp does not light up and/or does not stay on. The front-passenger seat is: • empty • occupied with a rearward-facing child restraint system	The automatic front-passenger front airbag deactivation system is malfunctioning. ▶ Make sure there is nothing between the seat and the child restraint system. ▶ Make sure that the entire base of the child restraint system rests on the seat cushion of the front-passenger seat. ▶ Make sure that the seat cushion length is fully retracted. ▶ When installing the child restraint system, make sure that the seat belt is tight. Do not pull the seat belt tight with the front-passenger seat adjustment. This could result in the seat belt and the child restraint system being pulled too tightly. ▶ Check that the child restraint system is installed correctly. ▶ Make sure that no objects are applying additional weight to the seat. ▶ If the PASSENGER AIR BAG OFF indicator lamp remains off and/or the PASSENGER AIR BAG ON indicator lamp lights up, do not install a rearward-facing child restraint system on the front-passenger seat. It is recommended that you fit the child restraint system to a suitable rear seat. ▶ Have the automatic front-passenger front airbag deactivation system checked immediately at a qualified specialist workshop.

Deployment of belt tensioners and airbags

Important safety notes

⚠ WARNING

After the airbag deploys, the airbag parts are hot. There is a risk of injury.

Do not touch the airbag parts. Have a deployed airbag replaced at a qualified specialist workshop as soon as possible.

⚠ WARNING

Pyrotechnical belt tensioners which have been triggered are no longer operational and therefore cannot protect as intended. There is an increased risk of injury, possibly even fatal.

Have pyrotechnic belt tensioners which have been triggered replaced at a qualified specialist workshop immediately.

Mercedes-Benz recommends that you have the vehicle towed to a qualified specialist workshop after an accident. Take this into account, par-

ticularly if a seat belt tensioner was triggered or an airbag was deployed.

An electric motor is used by PRE-SAFE® to trigger the tightening of the seat belt in hazardous situations. This procedure is reversible.

If the belt tensioners are triggered or an airbag is deployed, you will hear a bang, and a small amount of powder may also be released. The restraint system warning lamp lights up. Only in rare cases will the bang affect your hearing. In general, the powder released is not hazardous to health but may cause short-term breathing difficulties to persons suffering from asthma or other pulmonary conditions. Provided it is safe to do so, you should leave the vehicle immediately or open the window in order to prevent breathing difficulties.

Operation

During the first stage of a collision, the restraint system control unit evaluates important physical data relating to vehicle deceleration or acceleration, such as:

- duration
- direction
- intensity

Based on the evaluation of this data, the restraint system control unit triggers the seat belt tensioners in the event of a head-on or rear collision.

A seat belt tensioner can be triggered only if:

- the ignition is switched on
- the components of the restraint system are operational. You can find further information under: "Restraint system warning lamp" (▷ page 46)
- the seat belt buckle tongue has engaged in the belt buckle of the respective front seat

The seat belt tensioners in the rear compartment are triggered independently of the lock status of the seat belts.

If the restraint system control unit detects a high-severity accident, in certain head-on collisions, additional components of the restraint system are deployed independently of each other:

- front airbags and driver's kneebag
- windowbag, if the system determines that deployment can offer additional protection to that provided by the seat belt

On vehicles with the automatic front-passenger front airbag deactivation system: depending on the person in the front-passenger seat, the front-passenger front airbag is either disabled or enabled. The front-passenger front airbag can be deployed in an accident only if the PASSENGER AIR BAG OFF indicator lamp is off. Observe the information on the PASSENGER AIR BAG indicator lamps (▷ page 46).

Your vehicle has two-stage front airbags. In the first deployment stage, the front airbag is filled with propellant gas. The front airbag is fully deployed if the second deployment stage is activated within a few milliseconds.

The activation threshold for the seat belt tensioners and airbags is determined based on the evaluation of the vehicle's rate of deceleration or acceleration at various points in the vehicle. This process is pre-emptive in nature. The triggering/deployment process should take place in good time at the start of the collision.

The rate of vehicle deceleration or acceleration and the direction of the force are essentially determined by:

- the distribution of forces during the collision
- the collision angle
- the deformation characteristics of the vehicle
- the characteristics of the object with which the vehicle has collided

Factors that can be seen and measured only after a collision has occurred do not play a decisive role in the deployment of an airbag. Nor do they provide an indication of airbag deployment.

The vehicle may be deformed significantly without an airbag being deployed. This is the case if only parts that are relatively easily deformed are affected and the rate of deceleration is not high. Conversely, an airbag may be deployed even though the vehicle suffers only minor deformation. This is the case if, for example, very rigid vehicle parts such as longitudinal body members are hit, and sufficient deceleration occurs as a result.

If the restraint system control unit detects a side impact, the applicable components of the restraint system are activated independently of each other.

- Sidebags on the side on which an impact occurs, independently of the seat belt tensioner and seat belt usage

  Vehicles with the automatic front-passenger front airbag deactivation system: the sidebag

on the front-passenger side deploys under the following conditions:
- an occupant is detected in the front-passenger seat or
- the seat belt buckle tongue is engaged in the belt buckle of the front-passenger seat

- Windowbag on the side on which an impact occurs, independently of seat belt usage and regardless of whether the front-passenger seat is occupied
- Front seat belt tensioners, if the system determines that deployment can offer additional protection for the vehicle occupants in this situation

Not all airbags are deployed in an accident. The different airbag systems work independently of each other.

How the airbag system works is determined by the severity of the accident detected, especially the vehicle deceleration or acceleration, and the apparent type of accident:
- frontal collision
- side impact

PRE-SAFE® (anticipatory occupant protection)

Introduction

In certain hazardous situations, PRE-SAFE® takes pre-emptive measures to protect the vehicle occupants.

Important safety notes

Make sure that there are no objects in the footwell or behind the seats. There is a risk that the seats and/or the objects could be damaged when PRE-SAFE® is activated.

Although your vehicle is equipped with a PRE-SAFE® system, the possibility of injury in the event of an accident cannot be ruled out. Always adapt your driving style to suit the prevailing road and weather conditions and maintain a safe distance from the vehicle in front. Drive carefully.

Function

PRE-SAFE® intervenes:
- in emergency braking situations, e.g. when BAS is activated
- in critical driving situations, e.g. when physical limits are exceeded and the vehicle understeers or oversteers severely
- vehicles with the Driving Assistance package: when a driver assistance system intervenes powerfully or the radar sensor system detects an imminent danger of collision in certain situations

PRE-SAFE® takes the following measures depending on the hazardous situation detected:
- the front seat belts are pre-tensioned
- if the vehicle skids, the side windows and the sliding sunroof are closed
- vehicles with the memory function for the front-passenger seat: the front-passenger seat is adjusted if it is in an unfavourable position

If the hazardous situation passes without resulting in an accident, PRE-SAFE® slackens the belt pre-tensioning. All settings made by PRE-SAFE® can then be reversed.

If the seat belt pre-tensioning is not reduced:

▶ Move the seat backrest or seat back slightly when the vehicle is stationary.
Seat belt pre-tensioning is reduced and the locking mechanism is released.

The seat-belt adjustment is an integral part of the PRE-SAFE® convenience function. Information about the convenience function can be found under "Belt adjustment" (▷ page 50).

PRE-SAFE® PLUS (anticipatory occupant protection PLUS)

Introduction

PRE-SAFE® PLUS is available only in vehicles with the Driving Assistance package.

Using the radar sensor system, PRE-SAFE® PLUS is able to detect that a head-on or rear-end collision is imminent. In certain hazardous situations, PRE-SAFE® PLUS takes pre-emptive measures to protect the vehicle occupants.

Important safety notes

The intervention of PRE-SAFE® PLUS cannot prevent an imminent collision.

The driver is not warned before the intervention of PRE-SAFE® PLUS.

PRE-SAFE® PLUS does not intervene:

- if the vehicle is reversing
- when the vehicle is towing a trailer and there is a risk of a rear-end collision

When driving, or when parking or exiting a parking space with assistance from Parking Pilot, PRE-SAFE® PLUS will not apply the brakes.

Function

PRE-SAFE® PLUS intervenes in certain situations if the radar sensor system detects an imminent head-on or rear-end collision.

PRE-SAFE® PLUS takes the following measures depending on the hazardous situation detected:

- if the radar sensor system detects that a head-on collision is imminent, the seat belts are pre-tensioned
- if the radar sensor system detects that a rear-end collision is imminent:
  - the rear hazard warning lamps are activated and flash at a higher frequency
  - the brake pressure is increased if the driver applies the brakes when the vehicle is stationary
  - the seat belts are pre-tensioned

The PRE-SAFE® PLUS braking application is cancelled:

- if the accelerator pedal is depressed when a gear is engaged
- if the risk of a collision passes or is no longer detected
- if Distance Pilot DISTRONIC indicates an intention to pull away

If the hazardous situation passes without resulting in an accident, the original settings are restored.

Automatic measures after an accident

Immediately after an accident, the following measures are implemented, depending on the type and severity of the impact:

- the hazard warning lamps are activated
- the emergency lighting is activated
- the vehicle doors are unlocked
- the front side windows are lowered
- vehicles with the memory function: the electrically adjustable steering wheel is raised when the driver's door is opened
- the engine is switched off and the fuel supply is cut off
- vehicles with the Mercedes-Benz emergency call system: automatic emergency call

Children in the vehicle

Important safety notes

Accident statistics show that children secured on the rear seats are safer than children secured on the front-passenger seat. For this reason, Mercedes-Benz strongly advises that you install the child restraint system on a rear seat. Children are generally better protected there.

If a child younger than twelve years old and under 1.50 m in height is travelling in the vehicle:

- always secure the child in a child restraint system suitable for Mercedes-Benz vehicles. The child restraint system must be appropriate to the age, weight and size of the child.
- be sure to observe the instructions and safety notes in this section in addition to the child restraint system manufacturer's installation instructions.
- be sure to observe the instructions and safety notes on the automatic front-passenger front airbag deactivation system (▷ page 53).

⚠ WARNING

If you leave children unattended in the vehicle, they may be able to set the vehicle in motion if, for example, they:

- release the parking brake
- shift the automatic transmission out of park position **P** or shift manual transmission into neutral
- start the engine

In addition, they may operate vehicle equipment and become trapped. There is a risk of an accident and injury.

When leaving the vehicle, always take the key with you and lock the vehicle. Never leave children unattended in the vehicle.

⚠ WARNING

If persons (particularly children) are exposed to heat or cold for a prolonged period, there is a risk of serious or even fatal injuries. Never leave persons (particularly children) unattended in the vehicle.

⚠ WARNING

If the child restraint system is placed in direct sunlight, the parts could become very hot. Children could be suffer burns by touching these parts, in particular on the metallic parts of the child restraint system. There is a risk of injury.

If you and your child leave the vehicle, always make sure that the child restraint system is not in direct sunlight. Cover it with a blanket, for example. If the child restraint system has been exposed to direct sunlight, leave it to cool down before securing the child in it. Never leave children unattended in the vehicle.

Always ensure that all vehicle occupants have their seat belts fastened correctly and are sitting properly. Particular attention must be paid to children.

Observe the safety notes on the seat belt (▷ page 47) and the information on the correct use of the seat belt (▷ page 48).

Child restraint system

Observe the instructions for correct use of the child restraint system (▷ page 65).

For safety reasons, Mercedes-Benz recommends that you use only a child restraint system recommended by Mercedes-Benz (▷ page 69).

⚠ WARNING

If the child restraint system is incorrectly fitted on the seat position suitable for this purpose, it cannot perform its intended protective function. In the event of an accident, sharp braking or a sudden change in direction, the child may not be held securely. There is an increased risk of serious or even fatal injuries.

Observe the manufacturer's installation instructions and the correct use for the child restraint system. Make sure that the entire surface of the child restraint system is resting on the seat surface. Never place objects under or behind the child restraint system, e.g. cushions. Only use child restraint systems with the original cover designed for them. Only replace damaged covers with genuine covers.

⚠ WARNING

If the child restraint system is fitted incorrectly or is not secured, it can come loose in the event of an accident, heavy braking or a sudden change in direction. The child restraint system could be thrown about, striking vehicle occupants. There is an increased risk of injury, possibly even fatal.

Always fit child restraint systems properly, even if they are not being used. Make sure that you observe the child restraint system manufacturer's installation instructions.

You will find further information on stowing objects, luggage and loads securely under "Loading guidelines" (▷ page 320).

⚠ WARNING

Child restraint systems or their securing systems that have been damaged or subjected to a load in an accident cannot perform their

intended protective function. In the event of an accident, sharp braking or a sudden change in direction, the child may not be held securely. There is an increased risk of serious or even fatal injuries.

Immediately replace child restraint systems that have been damaged or subjected to a load in an accident. Have the child restraint securing systems checked in a qualified specialist workshop before fitting a child restraint system again.

The securing systems of child restraint systems are:

- the seat belt system
- the ISOFIX or i-Size securing rings
- the Top Tether anchorages

If circumstances require you to fit a child restraint system to the front-passenger seat, be sure to observe the information on "Child restraint systems on the front-passenger seat" (▷ page 64).

Observe the warning labels in the vehicle interior and on the child restraint system.

ⓘ It is advisable to use Mercedes-Benz care products to clean child restraint systems recommended by Mercedes-Benz. Information can be obtained at a qualified specialist workshop.

ISOFIX and i-Size child seat securing systems

⚠ **WARNING**

ISOFIX child restraint systems or i-Size child restraint systems do not offer sufficient protection for children whose weight is greater than 22 kg, who are secured using the safety belt integrated in the child restraint system. The child could, for example, not be restrained correctly in the event of an accident. This poses an increased risk of injury or even fatal injury.

If the child weighs more than 22 kg, only use ISOFIX child restraint systems or i-Size child restraint systems with which the child is also secured with the vehicle seat belt. Also secure the child restraint system with the Top Tether belt, if available.

When fitting a child restraint system, be sure to observe the manufacturer's installation and operating instructions and the instructions for correct use of the child restraint system (▷ page 65).

Before every trip, make sure that the ISOFIX child restraint system or the i-Size child restraint system is engaged correctly in both ISOFIX or i-Size securing rings.



This symbol indicates an ISOFIX position that is suitable for attaching an ISOFIX child restraint system. A similar symbol can be found on the ISOFIX child restraint system.



This symbol indicates an i-Size position that is suitable for attaching an i-Size child restraint system. A similar symbol can be found on the i-Size child restraint system.

❗ When fitting the child restraint system, make sure that the seat belt for the centre seat does not get trapped. Otherwise, the seat belt could be damaged.



① ISOFIX securing rings

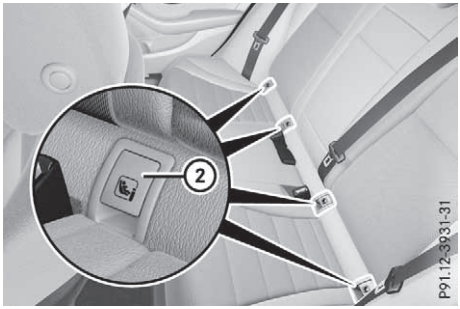

② i-Size securing rings

Vehicles with rear seat armrest: adjust the rear seat armrest so that ISOFIX securing rings ① or i-Size securing rings ② are accessible for the ISOFIX child restraint system or i-Size child restraint system.

- ▶ Install the ISOFIX child restraint system on both ISOFIX securing rings ① or i-Size securing rings ②.

or

- ▶ Install the i-Size child restraint system on both i-Size securing rings ②.

ISOFIX and i-Size are standardised securing systems for special child restraint systems. ISOFIX child restraint systems are approved in accordance with ECE R-44. i-Size child restraint systems are approved in accordance with ECE R-129.

Only child restraint systems that have been approved in accordance with ECE R-44 may be attached to ISOFIX securing rings. ISOFIX child restraint systems in accordance with ECE R-44 and i-Size child restraint systems that have been approved in accordance with ECE R-129 may be attached to i-Size securing rings. ISOFIX securing ring ① or i-Size securing ring ② are installed on the left and right sides of the rear seats.

Top Tether

Introduction

Top Tether provides an additional connection between the child restraint system secured with ISOFIX or i-Size and the vehicle. It helps reduce the risk of injury even further. If the child restraint system is fitted with a Top Tether belt, this should always be used.

Important safety notes

⚠ WARNING

If the rear seat backrests are not locked, they could fold forwards in the event of an accident, heavy braking or sudden changes of direction. As a result, child restraint systems cannot perform their intended protective function. Rear seat backrests that are not locked can also cause additional injuries, e.g. in the event of an accident. This poses an increased risk of injury or even fatal injury.

Always lock rear seat backrests after fitting a Top Tether belt. Observe the lock verification indicator.

If the rear seat backrest is not engaged and locked, this will be shown on the multifunction display on the instrument cluster.

Top Tether anchorages

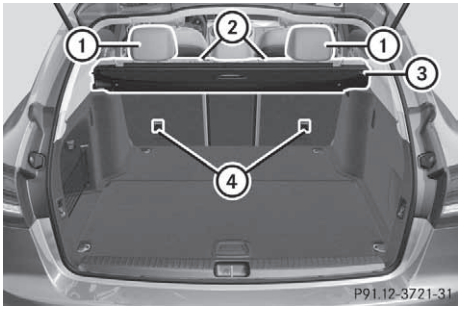

Top Tether anchorages ④ are located on the rear side of the backrests on both outer rear seats.

- ▶ Move head restraint ① upwards.
- ▶ Fit the ISOFIX or i-Size child restraint system with Top Tether. Always comply with the child

restraint system manufacturer's installation instructions when doing so.

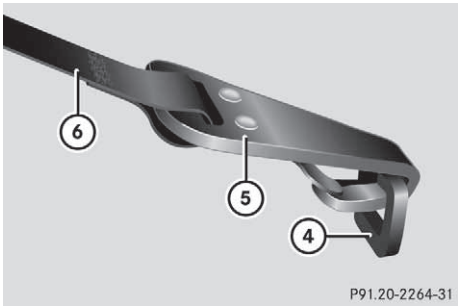

- ▶ Guide Top Tether belt ⑥ under head restraint ① between the two head restraint bars.
- ▶ Guide the Top Tether belt ⑥ downwards between the combined luggage cover and net ③ and seat backrest ②.
- ▶ Hook the Top Tether hook ⑤ into the Top Tether anchorage ④ on the rear of the seat backrest ②.
- ▶ Make sure that Top Tether belt ⑥ is not twisted.
- ▶ Tension Top Tether belt ⑥. Always comply with the child restraint system manufacturer's installation instructions when doing so.
- ▶ If necessary, move head restraint ① back down again slightly (▷ page 111). Make sure that you do not interfere with the correct routing of Top Tether belt ⑥.

Child restraint system on the front-passenger seat

General notes

Accident statistics show that children secured on the rear seats are safer than children secured on the front-passenger seat. For this reason, Mercedes-Benz strongly advises that you install a child restraint system on a rear seat.

Vehicles with the automatic front-passenger front airbag deactivation system: if it is absolutely necessary to fit a child restraint system to the front-passenger seat, always observe the information on the "Automatic front-passenger front airbag deactivation system" (▷ page 53).

You can thus avoid the risks that could arise as a result of:

- a child restraint system that is not detected by the automatic front-passenger front airbag deactivation system
- unintentional disabling of the front-passenger front airbag
- unsuitable positioning of the child restraint system, e.g. too close to the dashboard



Please observe the warning notice on the front-passenger sun visor; see illustration.

⚠ WARNING

If you secure a child in a rearward-facing child restraint system on the front-passenger seat and the PASSENGER AIR BAG OFF indicator lamp is off, the front-passenger front airbag can deploy in the event of an accident. The child could be struck by the airbag. This poses an increased risk of injury or even fatal injury.

Make sure that the front-passenger front airbag has been disabled. The PASSENGER AIR BAG OFF indicator lamp must be lit.

NEVER use a rearward-facing child restraint on a seat protected by an ACTIVE AIRBAG in front of it; DEATH or SERIOUS INJURY to the child can occur.

If the PASSENGER AIR BAG OFF indicator lamp goes out, the front-passenger front airbag is enabled (▷ page 46).

Vehicles without the automatic front-passenger front airbag deactivation system



If the front-passenger seat of your vehicle is not equipped with the automatic front-passenger front airbag deactivation system, this is indicated by a special sticker. The sticker is affixed to the side of the dashboard on the front-passenger side. The sticker is visible when you open the front-passenger door.

In this case, never fit a rearward-facing child restraint system on the front passenger seat (▷ page 65).

Observe the following information under "Rearward-facing child restraint system" (▷ page 65) and "Forward-facing child restraint system" (▷ page 65) as well as information on the suitable positioning of the child restraint system (▷ page 65).

Rearward-facing child restraint system

If it is absolutely necessary to fit a rearward-facing child restraint system on the front-passenger seat, always make sure that the front-passenger front airbag is disabled. Only if the PASSENGER AIR BAG OFF indicator lamp is lit continuously (▷ page 46) is the front-passenger front airbag disabled.

Always observe the information on suitable positioning of the child restraint system (▷ page 65) in addition to the child restraint system manufacturer's installation and operating instructions.

Forward-facing child restraint system

If it is absolutely necessary to fit a forward-facing child restraint system on the front-passenger seat, always move the front-passenger seat as far back as possible. Fully retract the seat cushion length. The entire base of the child restraint system must always rest on the seat cushion of the front-passenger seat. The backrest of the child restraint system must, as far as possible, lie flat against the backrest of the front-passenger seat. The child restraint system must not touch the roof or be put under strain by the head restraint. Adjust the angle of the seat backrest and the head restraint position accordingly. Always make sure that the shoulder belt strap is correctly routed from the vehicle belt outlet to the shoulder belt guide on the child restraint system. The shoulder belt strap must be routed forwards and downwards from the vehicle belt outlet. If necessary, adjust the vehicle belt outlet and the front-passenger seat accordingly.

Always observe the information on suitable positioning of the child restraint system (▷ page 65) in addition to the child restraint system manufacturer's installation and operating instructions.

Suitable positioning of the child restraint system

Introduction

Only child restraint systems approved in accordance with ECE standards ECE R44 or ECE R129 (i-Size child restraint systems) are permitted for use in the vehicle.

"Universal"-category child restraint systems can be recognised by their orange approval label and the text "Universal" or an "i-Size" label.

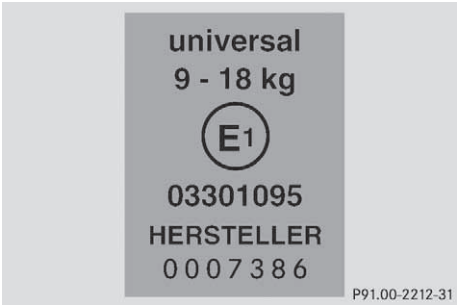

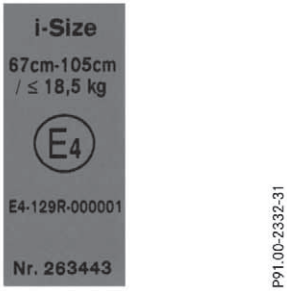

Example: approval label on the child restraint system

The following "Universal"-category ISOFIX or i-Size child restraint systems can be used on seats labelled U, UF, IUF or i-U according to the following tables:

- suitability of the seats for attaching a belt-secured child restraint system
- suitability of the seats for attaching an ISOFIX child restraint system
- suitability of the seats for attaching an i-Size child restraint system

Semi-universal child restraint systems are indicated by the text "semi-universal" on the approval label. These can be used if the vehicle and the seat are listed in the child restraint system manufacturer's vehicle model list. For further information, contact the child restraint system manufacturer or visit the manufacturer's website.

If circumstances require you to fit a child restraint system on the front-passenger seat:

- ▶ Always pay attention to the instructions under "Child restraint system on the front-passenger seat" (▷ page 64).

  There you will find instructions on how to correctly route the shoulder belt strap from the vehicle belt outlet to the shoulder belt guide on the child restraint system (▷ page 65).
- ▶ Move the front-passenger seat as far back as possible and fully retract the seat cushion length.
- ▶ Move the backrest to an almost vertical position.

  The entire base of the child restraint system must always rest on the seat cushion of the front-passenger seat. The backrest of a forward-facing child restraint system must, as far as possible, rest flat against the backrest of the front-passenger seat. The child restraint system must not touch the roof or be put under strain by the head restraint. Adjust the angle of the seat backrest and the head restraint position accordingly. In addition, observe the child restraint system manufacturer's installation instructions.
- ▶ Set the seat cushion angle in such a way that the front seat cushion edge is in the topmost position and the rear seat cushion edge in the lowest position.

Suitability of the seats for attaching a belt-secured child restraint system

If you use a baby car seat of category 0 or 0+ or a rearward-facing child restraint system of category I on a rear seat, you must adjust the driver's or front-passenger seat so that the seat does not touch the child restraint system.

If you use a category I, forward-facing child restraint system, you must remove the head restraint from the respective seat if possible and if applicable(▷ page 111). The backrest of the child restraint system must, as far as possible, lie flat against the backrest of the seat.

When you remove the child restraint system, you must replace the head restraints again immediately (▷ page 111). All vehicle occupants must adjust their head restraints correctly before beginning the journey.

Make sure that the child's feet do not touch the front seat. If necessary, move the front seat forwards slightly.

For certain ISOFIX child restraint systems in weight categories II or III, this can mean that the area of use is restricted. The maximum size setting of the child restraint system may not be possible due to possible contact with the roof.

Always observe the notes in the "Child restraint system" section (▷ page 61) and the child restraint system manufacturer's installation instructions.

Legend for the table:

X Seat that is unsuitable for children in this weight category.

U Suitable for child restraint systems in the "Universal" category that are approved for use in this weight category.

UF Suitable for forward-facing child restraint systems that belong to the "Universal" category and are approved for use in this weight category.

L Suitable for child restraint systems as recommended; see the "Recommended child restraint systems" table (▷ page 69). Suitable for semi-universal child restraint systems if the vehicle and the seat are listed in the child restraint system manufacturer's vehicle model list.

Weight category		Front-passenger seat		Rear seat	
		Front-passenger front airbag enabled	Front-passenger front airbag disabled[1]	Left, right	Centre[2]
0	up to 10 kg	X	U, L	U, L	U, L
0+	up to 13 kg	X	U, L	U, L	U, L
I	9 kg to 18 kg	UF, L	U, L	U, L	U, L
II	15 kg to 25 kg	UF, L	U, L	U, L	U, L
III	22 kg to 36 kg	UF, L	U, L	U, L	U, L

Suitability of the seats for attaching an ISOFIX child restraint system

If you use a baby car seat of category 0 or 0+ or a rearward-facing child restraint system of category I on a rear seat, you must adjust the driver's or front-passenger seat so that the seat does not touch the child restraint system.

If you use a category I, forward-facing child restraint system, you must remove the head restraint from the respective seat if possible and if applicable(▷ page 111). The backrest of the child restraint system must, as far as possible, lie flat against the backrest of the seat.

When you remove the ISOFIX child restraint system, you must replace the head restraints again immediately (▷ page 111). All vehicle occupants must adjust their head restraints correctly before beginning the journey.

Always observe the notes in the "Child restraint system" section (▷ page 61) and the child restraint system manufacturer's installation instructions.

Make sure that the child's feet do not touch the front seat. If necessary, move the front seat forwards slightly.

For certain child restraint systems in weight categories II or III, this can mean that the area of use is restricted. The maximum size setting of the child restraint system may not be possible due to possible contact with the roof.

1 The vehicle is equipped with an automatic front-passenger front airbag deactivation system. The PASSENGER AIR BAG OFF indicator lamp must be lit.

2 Child restraint systems with a supporting bracket are not suitable for this seat.

Legend for the table:

X ISOFIX position that is not suitable for ISOFIX child restraint systems in this weight category and/or size category.

IUF Suitable for forward-facing ISOFIX child restraint systems that belong to the "Universal" category and are approved for use in this weight category.

IL Suitable for ISOFIX child restraint systems as recommended; see the "Recommended child restraint systems" table (▷ page 69).

The manufacturer will also recommend a suitable ISOFIX child restraint system. For this, your vehicle and the seat must be listed in the child restraint system manufacturer's model list. For more information, contact the child restraint system manufacturer or visit their website.

Weight category		Size category	Equipment	Rear seat left, right
Carry cot		F	ISO/L1	X
		G	ISO/L2	X
0	up to 10 kg up to approx. 6 months	E	ISO/R1	IL
0+	up to 13 kg up to approx. 15 months	E	ISO/R1	IL
		D	ISO/R2	IL
		C	ISO/R3	IL[3]
I	9 to 18 kg approx. 9 months to 4 years	D	ISO/R2	IL
		C	ISO/R3	IL[3]
		B	ISO/F2	IUF
		B1	ISO/F2X	IUF
		A	ISO/F3	IUF

The child restraint system must not touch the roof or be put under strain by the head restraints. Adjust the head restraint position accordingly. In addition, observe the child restraint system manufacturer's installation instructions..

Suitability of the seats for attaching an i-Size child restraint system

If you use a baby car seat of category 0 or 0+ or a rearward-facing child restraint system of category I on a rear seat, you must adjust the driver's or front-passenger seat so that the seat does not touch the child restraint system.

If you are using a forward-facing child restraint system, you must remove the head restraint from the respective seat if possible and if applicable(▷ page 111). The backrest of the child restraint system must, as far as possible, lie flat against the backrest of the seat.

When you remove the child restraint system, you must replace the head restraints again immediately (▷ page 111). All vehicle occupants must adjust their head restraints correctly before beginning the journey.

[3] If you are using a child restraint system of size category C (ISO/R3), move the front seat to the highest position and move the backrest to an upright position. Make sure that the front seat backrest does not rest against the child restraint system.

Always observe the notes in the "Child restraint system" section (▷ page 61) and the child restraint system manufacturer's installation instructions.

Make sure that the child's feet do not touch the front seat. If necessary, move the front seat forwards slightly.

Legend for the table:

X Seat that is unsuitable for i-Size child restraint systems in the "Universal" category.

i-U Suitable for a forward or rearward-facing i-Size child restraint system in the "Universal" category.

	Seat			
	Front-passenger seat	Rear seat		
		Left	Centre	Right
i-Size child restraint systems	X	i-U	X	i-U

Recommended child restraint systems

General notes

Always observe the information in "Child restraint systems on the front-passenger seat" (▷ page 64) and in "Suitable positioning of the child restraint system" (▷ page 65).

You can obtain further information about the correct child restraint system from any Mercedes-Benz Service Centre.

Recommended child restraint systems for attaching with the vehicle seat belt

Weight categories	Manufacturer	Type	Approval number (E1 ...)	Order number (A 000 ...)[4]
Category 0: up to 10 kg up to approximately 6 months	Britax Römer	BABY SAFE plus II	04 301146	970 36 00 970 57 00
Category 0+: up to 13 kg up to approximately 15 months	Britax Römer	BABY SAFE plus II	04 301146	970 36 00 970 57 00
Category I: 9 kg to 18 kg between approximately 9 months and 4 years	Britax Römer	DUO plus	04 301133	970 37 00 970 58 00

4 Colour code 9H95.

Weight categories	Manufacturer	Type	Approval number (E1 ...)	Order number (A 000 ...)[4]
Category II/III: 15 kg to 36 kg between approximately 4 years and 12 years	Britax Römer	KIDFIX	04 301198	970 38 00 970 59 00
	Britax Römer	KIDFIX XP	04 301304	970 61 00

Recommended "Universal" and "Semi-Universal" category ISOFIX child restraint systems

Weight categories	Size category	Manufacturer	Type	Approval number (E1 ...)	Order number[4]
Category 0+: up to 13 kg	E	Britax Römer	BABY SAFE plus	04 301146	B6 6 86 8224
Category I: 9 kg to 18 kg	B1	Britax Römer	DUO plus	04 301133	A 000 970 37 00 A 000 970 58 00

Child-proof locks

Important safety notes

⚠ WARNING

If children are travelling in the vehicle, they could:

- open doors, thus endangering other people or road users
- exit the vehicle and be caught by oncoming traffic
- operate vehicle equipment and become trapped, for example

There is a risk of an accident and injury.

Always activate the child-proof locks and override feature if children are travelling in the vehicle. When leaving the vehicle, always take the key with you and lock the vehicle. Never leave children unattended in the vehicle.

Override feature for:

- the rear doors (▷ page 71)
- the rear side windows (▷ page 71)

Observe the important safety notes on the double-lock function (▷ page 85).

⚠ WARNING

If you leave children unattended in the vehicle, they may be able to set the vehicle in motion if, for example, they:

- release the parking brake
- shift the automatic transmission out of park position **P** or shift manual transmission into neutral
- start the engine

In addition, they may operate vehicle equipment and become trapped. There is a risk of an accident and injury.

When leaving the vehicle, always take the key with you and lock the vehicle. Never leave children unattended in the vehicle.

⚠ WARNING

If persons (particularly children) are exposed to heat or cold for a prolonged period, there is a risk of serious or even fatal injuries. Never

4 Colour code 9H95.

leave persons (particularly children) unattended in the vehicle.

⚠ WARNING

If the child restraint system is placed in direct sunlight, the parts could become very hot. Children could be suffer burns by touching these parts, in particular on the metallic parts of the child restraint system. There is a risk of injury.

If you and your child leave the vehicle, always make sure that the child restraint system is not in direct sunlight. Cover it with a blanket, for example. If the child restraint system has been exposed to direct sunlight, leave it to cool down before securing the child in it. Never leave children unattended in the vehicle.

Child-proof locks for the rear doors

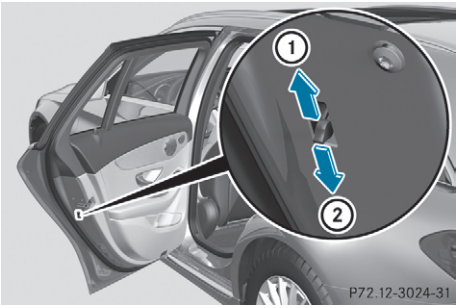

You can secure each door individually with the child-proof locks on the rear doors. A door secured with a child-proof lock cannot be opened from inside the vehicle. When the vehicle is unlocked, the door can be opened from the outside.

- ▶ **To activate:** press the child-proof lock lever up in the direction of arrow ①.
- ▶ Make sure that the child-proof lock is working properly.
- ▶ **To deactivate:** press the child-proof lock lever down in the direction of arrow ②.

Override feature for the rear side windows

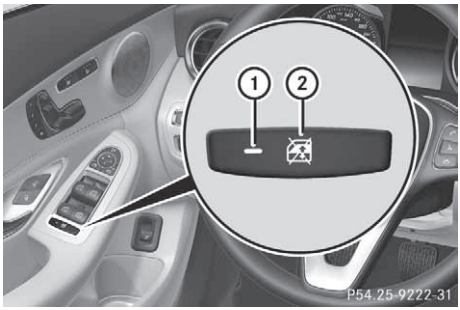

- ▶ **To activate/deactivate:** press button ②. If indicator lamp ① is lit, operation of the rear side windows is disabled. Operation is possible only using the switches on the driver's door. If indicator lamp ① is off, operation is possible using the switches in the rear compartment.

Pets in the vehicle

⚠ WARNING

If you leave animals unsupervised or unsecured in the vehicle, they may push a button or a switch, for example.

They could:

- activate vehicle equipment and become trapped, for example
- switch vehicle systems on or off, thus endangering other road users

In the event of an accident, sudden braking or abrupt changes of direction, unsecured animals could be flung around the vehicle, injuring the vehicle occupants. There is a risk of an accident and injury.

Never leave animals unattended in the vehicle. Always secure animals correctly during a journey, e.g. in an animal transport box.

Driving safety systems

Driving safety systems overview

In this section, you will find information about the following driving safety systems:

- ABS (**A**nti-lock **B**raking **S**ystem) (▷ page 72)
- BAS (**B**rake **A**ssist **S**ystem) (▷ page 73)
- Active Brake Assist (▷ page 73)
- Adaptive brake lights (▷ page 75)
- ESP® (**E**lectronic **S**tability **P**rogram) (▷ page 75)
- EBD (**e**lectronic **b**rake force **d**istribution) (▷ page 79)
- ADAPTIVE BRAKE (▷ page 79)
- Active Brake Assist with cross-traffic function (▷ page 79)
- STEER CONTROL (▷ page 82)

Important safety notes

The driving safety systems can neither reduce the risk of an accident if you fail to adapt your driving style or are not paying attention nor override the laws of physics. Driving safety systems are merely aids designed to assist driving. You are responsible for maintaining the distance to the vehicle in front, for vehicle speed, for braking in good time and for staying in lane. Always adapt your driving style to suit the prevailing road and weather conditions and maintain a safe distance from the vehicle in front. Drive carefully.

The driving safety systems described work as effectively as possible only when there is adequate contact between the tyres and the road surface. Pay particular attention to the information regarding tyres, recommended minimum tyre tread depths etc. in the "Wheels and tyres" section (▷ page 375).

In wintry driving conditions, always use winter tyres (M+S tyres) and, if necessary, snow chains. Only in this way will the driving safety systems described in this section work as effectively as possible.

ABS (Anti-lock Braking System)

General information

ABS regulates brake pressure in such a way that the wheels do not lock when you brake. This allows you to continue steering the vehicle when braking.

The ABS warning lamp on the instrument cluster lights up when the ignition is switched on. It goes out when the engine is running.

ABS works from a speed of about 8 km/h, regardless of road-surface conditions. ABS works on slippery surfaces, even when you brake only gently.

Important safety notes

Observe the "Important safety notes" section (▷ page 72).

⚠ WARNING

If ABS is faulty, the wheels could lock when braking. The steerability and braking characteristics may be severely impaired. Additionally, further driving safety systems are deactivated. There is an increased danger of skidding and accidents.

Drive on carefully. Have ABS checked immediately at a qualified specialist workshop.

If ABS is malfunctioning, other systems, including driving safety systems, will also become inoperative. Observe the information on the ABS warning lamp (▷ page 298) and display messages which may be shown on the instrument cluster (▷ page 263).

Brakes

- **If ABS intervenes:** continue to depress the brake pedal with force until the braking situation is over.
- **To make a full brake application:** depress the brake pedal with full force.

If ABS intervenes when braking, you will feel a pulsing in the brake pedal.

The pulsating brake pedal can be an indication of hazardous road conditions; this serves as a reminder to take extra care while driving.

BAS (Brake Assist System)

General notes

BAS operates in emergency braking situations. If you depress the brake pedal quickly, BAS automatically boosts the braking force, thus shortening the stopping distance.

Important safety notes

ⓘ Observe the "Important safety notes" section (▷ page 72).

⚠ **WARNING**

If BAS is malfunctioning, the braking distance in an emergency braking situation is increased. There is a risk of accident.

In an emergency braking situation, depress the brake pedal with full force. ABS prevents the wheels from locking.

Braking

▶ Keep the brake pedal depressed firmly until the emergency braking situation is over. ABS prevents the wheels from locking.

The brakes will function as usual once you release the brake pedal. BAS is deactivated.

Active Brake Assist

General information

ⓘ Observe the "Important safety notes" section (▷ page 72).

Active Brake Assist consists of a distance warning function with an autonomous braking function and Adaptive Brake Assist.

Active Brake Assist can help you to minimise the danger of collision with the vehicle in front or reduce the effects of such a collision.

If Active Brake Assist detects that there is a risk of collision, you will be warned visually and audibly. If you do not react to the visual and audible collision warning, autonomous braking can be initiated in critical situations. If you apply the brake yourself in a critical situation, Adaptive Brake Assist of the Active Brake Assist system supports you.

Important safety notes

In particular, the detection of obstacles can be impaired in the following situations:

- dirt on the sensors or obscured sensors
- snow or heavy rain
- interference by other radar sources
- strong radar reflections for example, in multi-storey car parks
- a narrow vehicle travelling in front, e.g. a motorcycle
- a vehicle travelling in front on a different line
- new vehicles or after servicing is carried out on the Active Brake Assist system

  Observe the important safety notes in the "Running-in notes" section (▷ page 152).

Following damage to the front end of the vehicle, have the configuration and operation of the radar sensor checked at a qualified specialist workshop. This also applies to collisions at low speeds where there is no visible damage to the front of the vehicle.

Switching on/off

Active Brake Assist is automatically active after switching on the ignition.

You can activate or deactivate Active Brake Assist (▷ page 254) on the on-board computer. When the system is deactivated, the distance warning function and the autonomous braking function are also deactivated.

If Active Brake Assist is deactivated, the  symbol appears on the assistance graphic display.

Distance warning function

General information

The distance warning function can help you to minimise the danger of collision with the vehicle in front or reduce the effects of such a collision. If the distance warning function detects a risk of collision with the vehicle in front, you will be warned visually and audibly.

Important safety notes

ⓘ Observe the "Important safety notes" section for driving safety systems (▷ page 72).

⚠ WARNING

The distance warning function does not react:

- to people or animals
- to oncoming vehicles
- to crossing traffic
- when cornering

The distance warning function may not give warnings in all critical situations. There is a risk of an accident.

Always pay careful attention to the traffic situation and be ready to brake.

Always adapt your speed to suit the prevailing road and traffic conditions.

⚠ WARNING

The distance warning function cannot always clearly identify objects and complex traffic situations.

In such cases, the distance warning function may:

- give an unnecessary warning
- not give a warning

There is a risk of an accident.

Always pay careful attention to the traffic situation; do not rely on the distance warning function alone.

Function

The distance warning function issues a warning at speeds:

- Of approximately 30 km/h or more if, over several seconds, the distance maintained to the vehicle travelling in front is insufficient. The distance warning lamp will then light up on the instrument cluster.
- Of approximately 7 km/h or more if you are rapidly approaching a vehicle in front. An intermittent warning tone will then sound and the distance warning lamp will light up on the instrument cluster.

▶ Brake immediately to increase the distance from the vehicle in front.

or

▶ Take evasive action provided it is safe to do so.

Due to the nature of the system, certain complex but non-critical driving conditions may also cause the system to display a warning.

With the help of the radar sensor system, the distance warning function can detect obstacles that are in the path of your vehicle for an extended period of time.

Up to a speed of approximately 70 km/h, the distance warning function can also react to stationary obstacles, such as stopped or parked vehicles.

Autonomous braking function

If the driver does not react to the distance warning signal in a critical situation, Active Brake Assist can assist the driver with the autonomous braking function.

Vehicles without Distance Pilot DISTRONIC: the autonomous braking function is available in the following speed ranges:

- 7–105 km/h for moving objects
- 7–50 km/h for stationary objects

Vehicles with Distance Pilot DISTRONIC: the autonomous braking function is available in the following speed ranges:

- 7–200 km/h for moving objects
- 7–50 km/h for stationary objects

Due to the nature of the system, complex but non-critical driving conditions may also cause the autonomous braking function to engage.

If the autonomous braking function demands particularly high braking force, preventative passenger protection measures (PRE-SAFE®) are activated simultaneously (▷ page 59).

Adaptive Brake Assist

General information

ⓘ Observe the "Important safety notes" section (▷ page 72).

With the help of the radar sensor system, Adaptive Brake Assist can detect obstacles that are in the path of your vehicle for an extended period of time.

If Adaptive Brake Assist detects a risk of collision with the vehicle in front, it calculates the braking force necessary to avoid a collision. If you apply the brakes forcefully, Adaptive Brake Assist will automatically increase the braking force to a level suitable for the traffic conditions.

Adaptive Brake Assist provides braking assistance in hazardous situations at speeds above 7 km/h. It uses the radar sensor system to assess the traffic situation.

Up to a speed of approximately 250 km/h, Adaptive Brake Assist is capable of reacting to moving objects that have already been detected as such at least once over the period of observation.

Up to a speed of approximately 70 km/h, Adaptive Brake Assist reacts to stationary obstacles.

If Adaptive Brake Assist demands a particularly high braking force, preventative passenger protection measures (PRE-SAFE®) are activated simultaneously (▷ page 59).

▶ Keep the brake pedal depressed until the emergency braking situation is over.
ABS prevents the wheels from locking.

The brakes will work normally again if:

- you release the brake pedal
- a danger of collision with the vehicle in front no longer exists
- no obstacle is detected in front of your vehicle

Adaptive Brake Assist is then deactivated.

Important safety notes

ⓘ Observe the "Important safety notes" section for driving safety systems (▷ page 72).

⚠ **WARNING**

Adaptive Brake Assist cannot always clearly identify objects and complex traffic situations.

In such cases, Adaptive Brake Assist can:

- intervene unnecessarily
- not intervene

There is a risk of an accident.

Always pay careful attention to the traffic situation and be ready to brake. Terminate the intervention in a non-critical driving situation.

⚠ **WARNING**

Adaptive Brake Assist does not react:

- to people or animals
- to oncoming vehicles
- to crossing traffic
- when cornering

As a result, Adaptive Brake Assist may not intervene in all critical conditions. There is a risk of an accident.

Always pay careful attention to the traffic situation and be ready to brake.

Always adapt your speed to suit the prevailing road and traffic conditions.

Due to the nature of the system, complex but non-critical driving conditions may also cause Brake Assist to engage.

If Adaptive Brake Assist is not available due to a malfunctioning radar sensor system, the brake system remains available with full brake boosting effect and BAS.

Adaptive brake lights

The adaptive brake lights warn following traffic in an emergency braking situation by:

- flashing brake lamps
- the hazard warning lamps are activated

If you brake sharply from a speed of more than 50 km/h or if braking is assisted by BAS or Active Brake Assist with cross-traffic function, the brake lights flash rapidly. In this way, traffic travelling behind you is warned in an even more noticeable manner.

If you brake sharply from a speed of more than 70 km/h to a standstill, the hazard warning lamps are switched on automatically. If the brakes are applied again, the brake lamps light up continuously. The hazard warning lamps switch off automatically if you travel at speeds greater than 10 km/h. You can also switch off the hazard warning lamps using the hazard warning button (▷ page 123).

ESP® (Electronic Stability Program)

General notes

ⓘ Observe the "Important safety notes" section (▷ page 72).

ESP® monitors driving stability and traction, i.e. power transmission between the tyres and the road surface.

If ESP® detects that the vehicle is deviating from the direction desired by the driver, one or more

wheels are braked to stabilise the vehicle. The engine output is also modified to keep the vehicle on the desired course within physical limits. ESP® assists the driver when pulling away on wet or slippery roads. ESP® can also stabilise the vehicle during braking.

ETS/4ETS (Electronic Traction System)

ⓘ Observe the "Important safety notes" section (▷ page 72).

ETS traction control is part of ESP®. On vehicles with 4MATIC, 4ETS is part of ESP®.

Traction control brakes the drive wheels individually if they spin. This enables you to pull away and accelerate on slippery surfaces, e.g. if the road surface is slippery on one side. In addition, more drive torque is transferred to the wheel or wheels with traction.

Traction control remains active if you deactivate ESP®.

Important safety notes

ⓘ Read the "Important safety notes" section (▷ page 72).

⚠ WARNING

If ESP® is malfunctioning, ESP® is unable to stabilise the vehicle. In addition, other driving safety systems are switched off. This increases the risk of skidding and an accident.

Drive on carefully. Have ESP® checked at a qualified specialist workshop.

When towing your vehicle with the rear axle raised, observe the notes on ESP® (▷ page 369).

If the ESP® OFF warning lamp lights up continuously, ESP® is deactivated.

If the ESP® warning lamp lights up continuously, ESP® is not available due to a malfunction.

Read the information on warning lamps (▷ page 298) and display messages that may be shown in the instrument cluster (▷ page 263).

Only use wheels with the recommended tyre sizes. Only then will ESP® function properly.

Characteristics of ESP®

General notes

If the ESP warning lamp goes out before beginning the journey, ESP® is automatically active.

If ESP® engages, the ESP® warning lamp flashes in the instrument cluster.

If ESP® engages:

- ▶ Do not deactivate ESP® under any circumstances.
- ▶ When pulling away, only depress the accelerator pedal as far as is necessary.
- ▶ Adapt your driving style to suit the prevailing road and weather conditions.

ECO start/stop function

The ECO start/stop function switches the engine off automatically if the vehicle stops moving. When the vehicle pulls away again, the engine starts automatically. ESP® remains in its previously selected status, e.g. if ESP® was deactivated before the engine was automatically switched off.

Activating/deactivating ESP® (except Mercedes-AMG vehicles)

Important safety notes

ⓘ Observe the "Important safety notes" section (▷ page 72).

You can select between the following ESP® statuses:

- ESP® is activated
- ESP® is deactivated

⚠ WARNING

If you deactivate ESP®, ESP® no longer stabilises the vehicle. There is an increased risk of skidding and an accident.

Only deactivate ESP® in the situations described in the following.

It may be best to deactivate ESP® in the following situations:

- when snow chains are used
- in deep snow
- on sand or gravel

Spinning the wheels results in a cutting action, which enhances traction.

ⓘ Activate ESP® as soon as the situations described above no longer apply. ESP® will otherwise not be able to stabilise the vehicle if the vehicle starts to skid or a wheel starts to spin.

Activating/deactivating ESP®

You can activate or deactivate ESP® via the on-board computer (▷ page 253).

ESP® deactivated:

The ESP® OFF warning lamp on the instrument cluster lights up.

ESP® activated:

The ESP® OFF warning lamp on the instrument cluster goes out.

Characteristics when ESP® is deactivated

If ESP® is deactivated and one or more wheels start to spin, the ESP® warning lamp on the instrument cluster flashes. In such situations, ESP® will not stabilise the vehicle.

If you deactivate ESP®:

- ESP® no longer improves driving stability
- engine torque is no longer limited and the drive wheels may start to spin
- traction control is still activated
- Active Brake Assist is not available; it is not activated even if you brake firmly with assistance from ESP®
- PRE-SAFE® is not available; it is not activated even if you brake firmly with assistance from ESP®
- PRE-SAFE® Brake is no longer available; it is not activated even if the brakes are firmly applied with assistance from ESP®
- ESP® still provides support when you brake firmly

Deactivating/activating ESP® (Mercedes-AMG vehicles)

Important safety notes

ⓘ Observe the "Important safety notes" section (▷ page 72).

You can select between the following ESP® statuses:

- ESP® is activated
- SPORT handling mode is activated
- ESP® is deactivated

ESP® is activated every time the engine is started, regardless of whether ESP® was deactivated before the engine was switched off.

⚠ WARNING

When SPORT handling mode is activated, there is a greater risk of skidding and accidents.

Only activate SPORT handling mode in the situations described in the following.

⚠ WARNING

If you deactivate ESP®, ESP® no longer stabilises the vehicle. There is an increased risk of skidding and an accident.

Only deactivate ESP® in the situations described in the following.

In the following situations, it may be better to activate SPORT handling mode or deactivate ESP®:

- when snow chains are used
- in deep snow
- on sand or gravel
- on specially designated roads when the vehicle's own oversteering and understeering characteristics are desired

Spinning the wheels results in a cutting action, which enhances traction.

Driving in SPORT handling mode or with ESP® deactivated requires a highly qualified and experienced driver.

ⓘ Activate ESP® as soon as the situations described above no longer apply. ESP® will otherwise not be able to stabilise the vehicle if the vehicle starts to skid or a wheel starts to spin.

Activating/deactivating ESP®



- ▶ **To activate SPORT handling mode:** briefly press button ①.
  The SPORT SPORT handling mode warning lamp on the instrument cluster lights up. The message SPORT handling mode appears on the multifunction display.
- ▶ **To deactivate SPORT handling mode:** briefly press button ①.
  The SPORT SPORT handling mode warning lamp on the instrument cluster goes out.
- ▶ **To deactivate ESP®:** press button ① until the ESP® OFF warning lamp lights up on the instrument cluster.
  The OFF message appears on the multifunction display.
- ▶ **To activate ESP®:** briefly press button ①.
  The ESP® OFF warning lamp on the instrument cluster goes out. The ON message appears on the multifunction display.

Characteristics when SPORT handling mode is activated

If SPORT handling mode is activated and one or more wheels start to spin, the ESP® warning lamp on the instrument cluster flashes. In such situations, ESP® will stabilise the vehicle only to a limited degree.

When SPORT handling mode is activated:

- ESP® improves driving stability only to a limited degree
- traction control is still activated
- engine torque is no longer limited and the drive wheels may start to spin
- ESP® still provides support when you brake firmly

Characteristics when ESP® is deactivated

If ESP® is deactivated and one or more wheels start to spin, the ESP® warning lamp on the instrument cluster does not flash. In such situations, ESP® will not stabilise the vehicle.

If you deactivate ESP®:

- ESP® no longer improves driving stability
- engine torque is no longer limited and the drive wheels may start to spin
- traction control is still activated
- Active Brake Assist is not available; it is not activated even if you brake firmly with assistance from ESP®
- PRE-SAFE® is not available; it is not activated even if you brake firmly with assistance from ESP®
- PRE-SAFE® Brake is no longer available; it is not activated even if the brakes are firmly applied with assistance from ESP®
- ESP® still provides support when you brake firmly

ESP® trailer stabilisation

General information

ESP® trailer stabilisation is not available in Mercedes-AMG vehicles.

If your vehicle/trailer combination begins to lurch, ESP® assists you in this situation. ESP® slows the vehicle down by braking and limiting the engine output until the vehicle/trailer combination has stabilised.

Important safety notes

⚠ WARNING

If road and weather conditions are poor, trailer stabilisation will not be able to prevent the vehicle/trailer combination from swerving. Trailers with a high centre of gravity can tip over before ESP® can detect this. There is a risk of an accident.

Always adapt your driving style to the prevailing road and weather conditions.

If your vehicle/trailer combination begins to lurch, you can stabilise the vehicle/trailer combination only by depressing the brake firmly.

ESP® trailer stabilisation is active above speeds of approximately 65 km/h.

ESP® trailer stabilisation does not work if ESP® is deactivated or disabled because of a malfunction.

Crosswind Assist

General information

Strong crosswind gusts can impair the ability of your vehicle to drive straight ahead. The crosswind driving assistance function integrated in ESP® noticeably reduces these impairments.

Depending on the direction and intensity of the crosswind affecting your vehicle, ESP® automatically intervenes.

ESP® intervenes with stabilising braking to assist you in keeping the vehicle in the lane.

Crosswind Assist is active at vehicle speeds above 80 km/h when driving straight ahead or cornering slightly.

Important safety notes

Crosswind Assist does not work if ESP® is deactivated or disabled because of a malfunction.

EBD (electronic brake force distribution)

General notes

EBD monitors and controls the brake pressure on the rear wheels to improve driving stability while braking.

Important safety notes

ⓘ Observe the "Important safety notes" section (▷ page 72).

⚠ **WARNING**

If EBD is malfunctioning, the rear wheels can lock, e.g. under full braking. This increases the risk of skidding and an accident.

You should therefore adapt your driving style to the different handling characteristics. Have the brake system checked at a qualified specialist workshop.

Observe information regarding indicator and warning lamps (▷ page 298) as well as display messages (▷ page 265).

ADAPTIVE BRAKE

ADAPTIVE BRAKE enhances braking safety and offers increased braking comfort. In addition to the braking function, ADAPTIVE BRAKE also has the HOLD function (▷ page 200) and hill start assist (▷ page 157).

Active Brake Assist with cross-traffic function

General information

ⓘ Observe the important safety notes in the "Driving safety systems" section (▷ page 72).

Active Brake Assist with cross-traffic function can help you to minimise the risk of a collision with a vehicle in front or a pedestrian and reduce the effects of such a collision. If Active Brake Assist with cross-traffic function detects a risk of collision, you will be warned visually and audibly and, if necessary, your brake application will be assisted according to the situation. If you do not react, the system can also react by braking automatically. If a risk of collision due to crossing traffic is detected, you will also be warned visually and audibly as well as assisted by the brake boosting effect, according to the situation.

Active Brake Assist with cross-traffic function is only available in vehicles with the Driving Assistance Plus package.

For Active Brake Assist with cross-traffic function to assist you when driving, the radar sensor system and the camera system must be operational.

If the radar sensor system or the camera system is malfunctioning, Active Brake Assist with cross-traffic function is restricted or no longer available. The brake system is still available with complete brake boosting effect and BAS.

The radar sensor system and camera system help Active Brake Assist with cross-traffic function to detect obstacles that are in the path of your vehicle for an extended period of time.

In addition, pedestrians in the path of your vehicle can be detected.

Active Brake Assist with cross-traffic function detects pedestrians using typical characteristics such as body contours and the posture of a person standing upright.

ⓘ Observe the restrictions described in the "Important safety notes" section (▷ page 80).

Important safety notes

⚠ WARNING

Active Brake Assist with cross-traffic function will initially brake your vehicle by a partial application of the brakes if a danger of collision is detected. There may be a collision unless you brake yourself. Even after subsequent full application of the brakes a collision cannot always be avoided, particularly when approaching at too high a speed. There is a risk of an accident.

Always apply the brakes yourself and try to take evasive action, provided it is safe to do so.

If you partially apply the brakes, the vehicle is braked with up to 50% of the full braking force.

⚠ WARNING

Active Brake Assist with cross-traffic function cannot always clearly identify objects and complex traffic situations.

In such cases, Active Brake Assist with cross-traffic function might:

- issue an unnecessary warning or engage
- neither issue a warning nor intervene

There is a risk of an accident.

Always pay particular attention to the traffic situation and be prepared to brake, especially if Active Brake Assist with cross-traffic function alerts you. Terminate the intervention in a non-critical driving situation.

⚠ WARNING

Active Brake Assist with cross-traffic function cannot always clearly identify people, particularly if they are moving. Active Brake Assist with cross-traffic function cannot intervene in these cases. There is a risk of an accident.

Always pay particular attention to the traffic situation and be prepared to brake, especially if Active Brake Assist with cross-traffic function alerts you.

To maintain the appropriate distance to the vehicle in front and thus prevent a collision, you must apply the brakes yourself.

⚠ WARNING

Active Brake Assist with cross-traffic function does not react:

- to small people, e.g. children
- to animals
- to oncoming vehicles
- when cornering

As a result, Active Brake Assist with cross-traffic function may not warn you or engage in all critical situations. There is a risk of an accident.

Always pay careful attention to the traffic situation and be ready to brake.

In the event of snowfall or heavy rain, detection can be impaired.

Detection by the radar sensor system is also impaired in the following situations:

- dirt on the sensors or obscured sensors
- interference by other radar sources
- strong radar reflections for example, in multi-storey car parks
- a narrow vehicle travelling in front, e.g. a motorcycle
- a vehicle travelling in front on a different line
- vehicles moving quickly into the radar sensor system detection range

Detection by the camera system is also impaired in the following situations:

- dirt on the camera or obscured camera
- glare on the camera system, e.g. from the sun being low in the sky

- darkness
- if:
  - pedestrians move quickly, e.g. into the path of the vehicle
  - the camera system no longer detects a pedestrian as a person due to special clothing or other objects
  - a pedestrian is concealed by other objects
  - the typical outline of a pedestrian is not distinguishable from the background

Following damage to the front end of the vehicle, have the radar sensor settings and operation checked at a qualified specialist workshop. This also applies to collisions at low speeds where there is no visible damage to the front of the vehicle.

Following damage to the windscreen, have the configuration and operation of the camera system checked at a qualified specialist workshop.

Function

▶ **To activate or deactivate:** activate or deactivate Active Brake Assist with cross-traffic function using the on-board computer (▷ page 254).
If Active Brake Assist with cross-traffic function is deactivated, the OFF symbol appears on the multifunction display.

This function will issue a warning if:

- above a speed of around 30 km/h or more, the distance maintained to the vehicle travelling in front is insufficient for several seconds
  The distance warning lamp will then light up on the instrument cluster.
- at a speed of approximately 7 km/h or more, you rapidly approach a vehicle in front or a pedestrian
  An intermittent warning tone will then sound and the distance warning lamp will light up on the instrument cluster.

▶ Brake immediately to rectify the situation.

or

▶ Take evasive action provided it is safe to do so.

Active Brake Assist with cross-traffic function can also brake the vehicle automatically under the following conditions:

- the driver and front passenger have their seat belts fastened
- the vehicle speed is between approximately 7 km/h and 200 km/h

Up to a speed of approximately 70 km/h, Active Brake Assist with cross-traffic function may react to:

- stationary objects in the path of your vehicle, e.g. stopped or parked vehicles
- pedestrians in the path of your vehicle

ⓘ If an increased danger of collision exists, preventative passenger protection measures (PRE-SAFE®) are triggered (▷ page 59).

If the danger of collision with the vehicle in front remains and you do not brake, take evasive action or accelerate quickly, the vehicle may perform automatic emergency braking up to the point of full brake application. Automatic full brake application is not performed until immediately prior to an imminent accident.

If you apply the brake yourself in a critical situation or during autonomous braking, situation-dependent braking assistance is provided. If necessary, this increases the brake pressure up to full brake application.

To avoid a collision, Active Brake Assist with cross-traffic function calculates the brake force necessary if:

- you approach an obstacle and
- Active Brake Assist with cross-traffic function has detected a risk of a collision

When driving at a speed under 30 km/h: if you depress the brake pedal, Active Brake Assist with cross-traffic function is activated. Braking assistance from Active Brake Assist with cross-traffic function is carried out at the last possible moment.

When driving at a speed above 30 km/h: if you depress the brake pedal sharply, Active Brake Assist with cross-traffic function automatically increases the brake pressure to a degree suited to the traffic situation.

Active Brake Assist with cross-traffic function provides braking assistance in hazardous situations with vehicles in front within a speed range between 7 km/h and 250 km/h.

Up to a speed of approximately 70 km/h, Active Brake Assist with cross-traffic function assists you with braking in hazardous situations with:

- stationary obstacles in the path of the vehicle, e.g. stopped or parked vehicles
- stationary pedestrians in the path of the vehicle
- obstacles crossing your path that move in the detection range of the sensors and are detected

▶ Keep the brake pedal depressed until the emergency braking situation is over.
ABS prevents the wheels from locking.

You can prevent the intervention of Active Brake Assist with cross-traffic function at any time by:

- depressing the accelerator pedal further
- activating kickdown
- releasing the brake pedal

The braking application of Active Brake Assist with cross-traffic function is ended automatically if:

- you manoeuvre to avoid the obstacle
- the danger of collision has passed
- an obstacle is no longer detected in front of your vehicle

STEER CONTROL

General information

STEER CONTROL helps you by transmitting a noticeable steering force to the steering wheel in the direction required for vehicle stabilisation.

This steering support is provided in particular if:

- both right wheels or both left wheels are on a wet or slippery road surface when you brake
- the vehicle begins to skid

Important safety notes

ⓘ Observe the "Important safety notes" section (▷ page 72).

No steering support is provided from STEER CONTROL, if:

- ESP® is deactivated
- ESP® is malfunctioning
- the steering is faulty

If ESP® is malfunctioning, you will be assisted further by the electrical power steering.

Protection against theft

Immobiliser

The immobiliser prevents your vehicle from being started without the correct key.

▶ **To activate with the key:** remove the key from the ignition lock.

▶ **To activate with KEYLESS-GO start function or KEYLESS-GO:** switch the ignition off and open the driver's door.

▶ **To deactivate:** switch on the ignition.

When leaving the vehicle, always take the key with you and lock the vehicle. Anyone can start the engine if a valid key has been left inside the vehicle.

ⓘ The immobiliser is always deactivated when you start the engine.

ATA (Anti-Theft Alarm system)

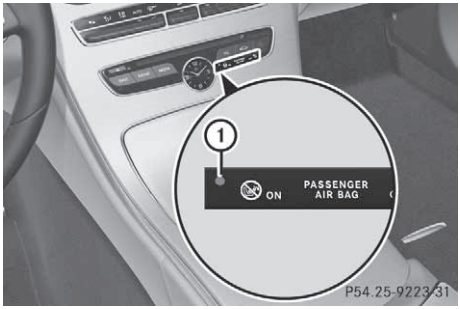

▶ **To activate:** lock the vehicle with the key or KEYLESS-GO.
Indicator lamp ① flashes. The alarm system is activated after approximately ten seconds.

▶ **To deactivate:** unlock the vehicle with the key or KEYLESS-GO.

or

▶ Insert the key into the ignition lock.

or

▶ **Vehicles with KEYLESS-GO start function or KEYLESS-GO:** press the Start/Stop button.
The key must be in the vehicle.

A visual and audible alarm is triggered if the alarm system is primed and you open:

- a door
- the vehicle with the emergency key element
- the tailgate
- the bonnet

▶ **To stop the alarm with the key:** press the [🔓] or [🔒] button on the key.
The alarm stops.

or

▶ **Vehicles with KEYLESS-GO start function or KEYLESS-GO:** remove the Start/Stop button from the ignition lock (▷ page 154).

▶ Insert the key into the ignition lock.
The alarm stops.

▶ **To stop the alarm using KEYLESS-GO:** grasp the outside door handle. The key must be outside the vehicle.
The alarm stops.

or

▶ Press the Start/Stop button on the dashboard. The key must be inside the vehicle.
The alarm stops.

The alarm does not stop, even if you close the open door that has triggered it, for example.

Tow-away protection

Function

An audible and visual alarm is triggered if your vehicle's angle of inclination is altered while tow-away protection is primed. This can occur if the vehicle is jacked up on one side, for example.

Switching on/off

Tow-away protection is automatically activated or deactivated with the ATA (anti-theft alarm system) when:

- the doors are closed
- the tailgate is closed

Tow-away protection is active around 60 seconds after the ATA has been switched on (▷ page 82).

Deactivating

To prevent a false alarm, deactivate tow-away protection if you lock your vehicle and it:

- is being transported
- is being loaded, e.g. onto a ferry or car transporter
- is parked on a movable surface, e.g. in a split-level garage

The tow-away alarm remains deactivated until you switch the ATA on again after opening a door.

You can deactivate tow-away protection via the multimedia system (see the Digital Owner's Manual).

Interior motion sensor

Function

When the interior motion sensor is primed, a visual and audible alarm is triggered if movement is detected in the vehicle interior. This can occur if someone reaches into the vehicle interior, for example.

Switching on/off

The interior motion sensor is automatically switched on or off via the ATA (anti-theft alarm system) when:

- the doors are closed
- the tailgate is closed

The interior motion sensor is active around ten seconds after the ATA has been switched on (▷ page 82).

You can prevent false alarms by doing the following before priming the ATA:

- close the side windows
- close the sliding sunroof or the panorama sliding sunroof
- make sure that no objects, such as mascots, are attached to the rear-view mirror or the grab handles on the roof trim

Deactivating

If you want to lock your vehicle and people or animals are inside it, you can deactivate the interior motion sensor.

The interior motion sensor remains deactivated until you switch the ATA on again after opening a door.

You can deactivate the interior motion sensor via the multimedia system (see the Digital Owner's Manual).

Key

Important safety notes

United Kingdom only:

⚠ WARNING

When the double locks are activated, the doors can no longer be opened from the inside. People in the vehicle can no longer get out, e.g. in hazardous situations. There is a risk of injury.

Therefore, do not leave any people unsupervised in the vehicle, particularly children, elderly people or people in need of special assistance. Do not activate the double lock when people are in the vehicle.

If the vehicle has been locked from the outside, the double lock function is activated as standard. It is then not possible to open the doors from inside the vehicle. You can deactivate the double lock function by deactivating the interior motion sensor (see Digital Owner's Manual). The doors can then be opened from the inside after the vehicle has been locked from the outside. The anti-theft alarm system is triggered if the door is opened from the inside. Switch off the alarm (▷ page 82).

All countries:

⚠ WARNING

If children are left unsupervised in the vehicle, they could:

- open doors, thereby endangering other persons or road users
- get out and be struck by oncoming traffic
- operate vehicle equipment and become trapped, for example

In addition, the children could also set the vehicle in motion, for example, if they:

- release the parking brake
- shift the automatic transmission out of park position P or shift manual transmission into neutral
- start the engine

There is a risk of an accident and injury.

When leaving the vehicle, always take the key with you and lock the vehicle. Never leave children and animals unattended in the vehicle. Keep the keys out of the reach of children.

⚠ WARNING

If you attach heavy or large objects to the key, the key could be unintentionally turned in the ignition lock. This could cause the engine to be switched off. There is a risk of an accident.

Do not attach any heavy or large objects to the key. Remove any bulky keyrings before inserting the key into the ignition lock.

! Keep the key away from strong magnetic fields. Otherwise, the remote control function could be affected.

Strong magnetic fields can occur in the vicinity of powerful electrical installations.

Do not store the key:

- with electronic devices, e.g. a mobile phone or another key
- with metallic objects, e.g. coins or metal foil
- inside metallic objects, e.g. a metal case

This can impair the key's function.

Vehicles with KEYLESS-GO start function: do not keep the key in the luggage compartment. Otherwise, the key may not be detected, e.g. when starting the engine using the Start/Stop button.

A check that periodically establishes a radio connection between the vehicle and the key determines whether a valid key is in or in the direct vicinity of the vehicle. This occurs, for example:

- while starting the engine
- during driving
- when using HANDS-FREE ACCESS
- when the external door handles are touched
- during convenience closing

Key functions

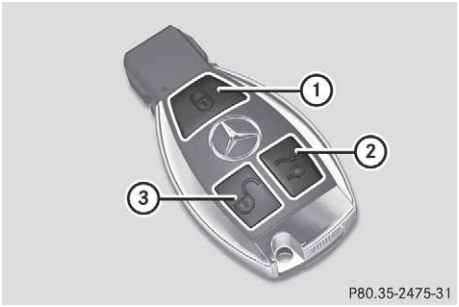

① Locks the vehicle
② Opens/closes the tailgate
③ Unlocks the vehicle

▶ **To unlock centrally:** press the button.

If you do not open the vehicle within approximately 40 seconds of unlocking:

- the vehicle locks again
- protection against theft is reactivated

▶ **To lock centrally:** press the button.

The key centrally locks and unlocks the following components:

- the doors
- the tailgate
- the fuel filler flap

During unlocking, the turn signals flash once. During locking, they flash three times.

You can also set an audible signal to confirm that the vehicle has been locked. The audible signal can be activated and deactivated via the multimedia system (see Digital Owner's Manual).

Only when all the components have been locked is the visual or audible locking confirmation issued.

When the locator lighting is activated via the multimedia system, it lights up when it is dark after the vehicle is unlocked with the key (see Digital Owner's Manual).

▶ **To open the tailgate automatically from outside the vehicle:** press and hold the button until the tailgate opens.

▶ **To close the tailgate automatically from outside the vehicle:** if the key is located in the immediate vicinity of the vehicle, press the button on the key.
When the tailgate closes, you can then release the button.

KEYLESS-GO

General notes

Bear in mind that the engine can be started by any of the vehicle occupants if there is a key in the vehicle (▷ page 156).

Locking and unlocking centrally

You can start, lock or unlock the vehicle using KEYLESS-GO. To do this, you need to carry the key with you. You can combine the KEYLESS-GO functions with the functions of a conventional key. Unlock the vehicle using KEYLESS-GO, for instance, and lock it using the button on the key.

The driver's door and the door on which the handle is used must both be closed. The key must be outside the vehicle. When locking or unlocking with KEYLESS-GO, the distance between the key and the corresponding door handle must not be greater than 1 m.

A check that periodically establishes a radio connection between the vehicle and the key determines whether a valid key is in or in the direct vicinity of the vehicle. This occurs, for example:

- while starting the engine
- while driving
- when using HANDS-FREE ACCESS
- when the external door handles are touched
- during convenience closing

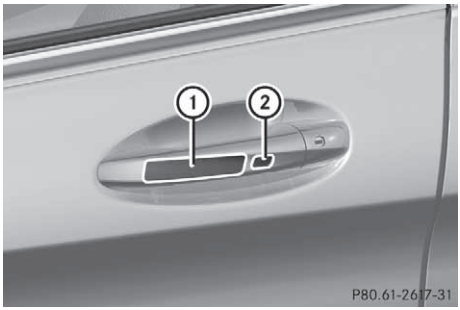

- **To unlock the vehicle:** touch the inner surface of the door handle.
- **To lock the vehicle:** touch sensor surface ① or ②.
  Make sure that you do not touch the inner surface of the door handle.
- **Convenience closing feature:** touch recessed sensor surface ② for an extended period.
  Further information on the convenience closing feature (▷ page 100).
- **To unlock the tailgate:** pull the tailgate handle.

Activating and deactivating

If you do not intend to use a key for an extended period of time, you can deactivate the KEYLESS-GO function of the key. The key will then use very little power, thereby conserving battery power. For the purposes of activation or deactivation, the vehicle does not have to be nearby.

- **To deactivate:** press the [🔒] button on the key twice in rapid succession.
  The battery indicator light (▷ page 88) of the key flashes twice briefly and lights up once; KEYLESS-GO is deactivated.
- **To activate:** press any button on the key.

or

- Insert the key into the ignition lock.
  KEYLESS-GO and all its associated features are available again.

KEYLESS-GO start function

General notes

Bear in mind that the engine can be started by any of the vehicle occupants if there is a key in the vehicle (▷ page 156).

Changing the settings of the locking system

You can change the settings of the locking system. This means that only the driver's door and the fuel filler flap are unlocked when the vehicle is unlocked. This is useful if you frequently travel alone.

- **To change the setting:** press and hold down the [🔓] and [🔒] buttons simultaneously for about six seconds until the battery indicator lamp flashes twice (▷ page 88).

If the setting of the locking system is changed within the signal range of the vehicle, pressing the [🔒] or [🔓] button:

- locks or
- unlocks the vehicle

The key now functions as follows:

- **To unlock:** press the [🔓] button once.
- **To unlock centrally:** press the [🔓] button twice.
- **To lock:** press the [🔒] button.
- **To restore the factory settings:** press and hold down the [🔓] and [🔒] buttons simultaneously for approximately six seconds until the battery check lamp flashes twice (▷ page 88).

The KEYLESS-GO functions can be changed as follows:

- **To unlock the driver's door:** touch the inner surface of the door handle on the driver's door.
- **To unlock centrally:** touch the inner surface of the door handle on the front-passenger door or the rear door.
- **To lock centrally:** touch the outer sensor surface on one of the door handles.

Emergency key element

General notes

If the vehicle can no longer be unlocked with the key or KEYLESS-GO, use the emergency key element.

If you use the emergency key element to unlock and open the driver's door, the anti-theft alarm system will be triggered. Switch off the alarm (▷ page 82).

If you unlock the vehicle using the emergency key element, the fuel filler flap will not be unlocked automatically.

- **To unlock the fuel filler flap:** insert the key into the ignition lock.

Removing the emergency key element

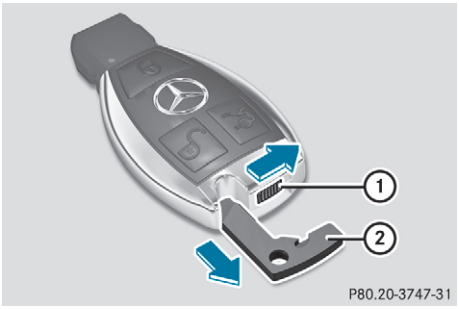

▶ Push release catch ① in the direction of the arrow and, at the same time, remove emergency key element ② from the key.

For further information about:

- Locking/unlocking the driver's door (▷ page 93)
- Unlocking the tailgate (▷ page 98)

Inserting the emergency key element

▶ Push emergency key element ② completely into the key until it engages and release catch ① is back in its basic position.

Key battery

Important safety notes

⚠ WARNING

Batteries contain toxic and corrosive substances. If batteries are swallowed, it can result in severe health problems. There is a risk of fatal injury.

Keep batteries out of the reach of children. If a battery is swallowed, seek medical attention immediately.

Environmental note

Batteries contain pollutants. It is illegal to dispose of them with the household rubbish. They must be collected separately and disposed of in an environmentally responsible recycling system.

Dispose of batteries in an environmentally responsible manner. Take discharged batteries to a qualified specialist workshop or to a collection point for used batteries.

Mercedes-Benz recommends that you have the batteries replaced at a qualified specialist workshop.

Checking the battery



▶ Press the [🔒] or [🔓] button.
The battery is OK if battery check lamp ① lights up briefly.
The battery is discharged if battery check lamp ① does not light up briefly.

▶ Replace the battery (▷ page 88).

If the key battery is checked within the signal reception range of the vehicle, pressing the [🔒] or [🔓] button:

- locks or
- unlocks the vehicle

ⓘ You can obtain a battery from any qualified specialist workshop.

Replacing the battery

You require a CR 2025 3 V cell battery.

▶ Take the emergency key element out of the key (▷ page 88).

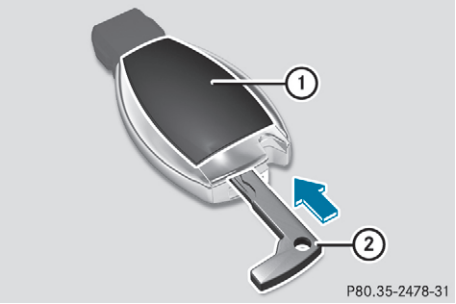

- ▶ Press emergency key element ② into the opening in the key in the direction of the arrow until battery compartment cover ① opens. When doing so, do not hold battery compartment cover ① shut.
- ▶ Remove battery compartment cover ①.

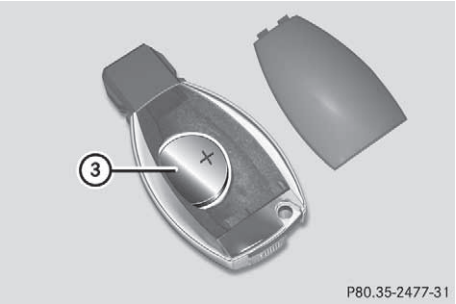

- ▶ Repeatedly tap the key against your palm until battery ③ falls out.
- ▶ Insert the new battery with the positive terminal facing upwards. Use a lint-free cloth to do so.
- ▶ Make sure that the surface of the battery is free of lint, grease and other contamination.
- ▶ Insert the front tabs of battery compartment cover ① into the housing and then press to close it.
- ▶ Insert emergency key element ② into the key (▷ page 88).
- ▶ Check the function of all key buttons on the vehicle.

Problems with the key

Problem	Possible causes/consequences and ▶ Solutions
You can no longer lock or unlock the vehicle using the key.	The key battery is weak or discharged. ▶ Check the key battery (▷ page 88) and replace if necessary (▷ page 88). If this does not work: ▶ Lock or unlock the vehicle using the emergency key element (▷ page 93).
	Interference from a powerful source of radio waves. ▶ Lock or unlock the vehicle using the emergency key element (▷ page 93).
	The key is faulty. ▶ Lock or unlock the vehicle using the emergency key element (▷ page 93). ▶ Have the key checked at a qualified specialist workshop.

Problem	Possible causes/consequences and ▶ Solutions
You can no longer lock or unlock the vehicle using KEYLESS-GO.	KEYLESS-GO has been deactivated. ▶ Reactivate KEYLESS-GO (▷ page 87).
	The key battery is weak or discharged. ▶ Check the key battery (▷ page 88) and replace if necessary (▷ page 88). If this does not work: ▶ Lock or unlock the vehicle using the emergency key element (▷ page 93).
	Interference from a powerful source of radio waves. ▶ Lock or unlock the vehicle using the emergency key element (▷ page 93).
	Fault with KEYLESS-GO. ▶ Lock or unlock the vehicle using the remote control function of the key. ▶ Have the vehicle and key checked at a qualified specialist workshop. If the vehicle cannot be locked or unlocked even using the remote control function: ▶ Lock or unlock the vehicle using the emergency key element (▷ page 93). ▶ Have the vehicle and key checked at a qualified specialist workshop.
The engine cannot be started using the key.	The on-board voltage is too low. ▶ Switch off non-essential consumers, e.g. seat heating or interior lighting, and try to start the engine again. If this does not work: ▶ Check the starter battery and charge it if necessary (▷ page 364). or ▶ Jump-start the vehicle (▷ page 365). or ▶ Consult a qualified specialist workshop.
The engine cannot be started using the Start/Stop button. The key is in the vehicle.	The vehicle is locked. ▶ Unlock the vehicle and try to start the vehicle again.
	The key battery is weak or discharged. ▶ Check the key battery (▷ page 88) and replace if necessary (▷ page 88). If this does not work: ▶ Start your vehicle with the key in the ignition lock.
	Interference from a powerful source of radio waves. ▶ Start your vehicle with the key in the ignition lock.

Problem	Possible causes/consequences and ▶ Solutions
You have lost a key.	▶ Have the key deactivated at a qualified specialist workshop. ▶ Report the loss immediately to the vehicle insurers. ▶ If necessary, have the locks changed as well.
You have lost the emergency key element.	▶ Report the loss immediately to the vehicle insurers. ▶ If necessary, have the locks changed as well.

Doors

Important safety notes

United Kingdom only:

⚠ WARNING

When the double locks are activated, the doors can no longer be opened from the inside. People in the vehicle can no longer get out, e.g. in hazardous situations. There is a risk of injury.

Therefore, do not leave any people unsupervised in the vehicle, particularly children, elderly people or people in need of special assistance. Do not activate the double lock when people are in the vehicle.

If the vehicle has been locked from the outside, the double lock function is activated as standard. It is then not possible to open the doors from inside the vehicle. You can deactivate the double lock function by deactivating the interior motion sensor (see Digital Owner's Manual). The doors can then be opened from the inside after the vehicle has been locked from the outside. The anti-theft alarm system is triggered if the door is opened from the inside. Switch off the alarm (▷ page 82).

All countries:

⚠ WARNING

If children are left unsupervised in the vehicle, they could:

- open doors, thereby endangering other persons or road users
- get out and be struck by oncoming traffic
- operate vehicle equipment and become trapped, for example

In addition, the children could also set the vehicle in motion, for example, if they:

- release the parking brake
- shift the automatic transmission out of park position P or shift manual transmission into neutral
- start the engine

There is a risk of an accident and injury.

When leaving the vehicle, always take the key with you and lock the vehicle. Never leave children and animals unattended in the vehicle. Keep the keys out of the reach of children.

Unlocking and opening the doors from the inside

United Kingdom only: if the vehicle has been locked with the key or with KEYLESS-GO, the double lock function is activated as standard. It is then not possible to open the doors from inside the vehicle. You can deactivate the double lock function by deactivating the interior motion sensor (see Digital Owner's Manual). The doors can then be opened from the inside after the vehicle has been locked from the outside. You can open the rear side doors from inside the vehicle only if they are not secured by the child-proof locks (▷ page 71). The anti-theft alarm system is triggered if the door is opened from the inside. Switch off the alarm (▷ page 82).

For all countries except the United Kingdom:

You can open a door from inside the vehicle even if it has been locked. You can open the rear side doors from inside the vehicle only if they are not secured by the child-proof locks (▷ page 71). If the vehicle has previously been locked with the key or with KEYLESS-GO, opening a door from the inside will trigger the anti-

theft alarm system. Switch off the alarm (▷ page 82).

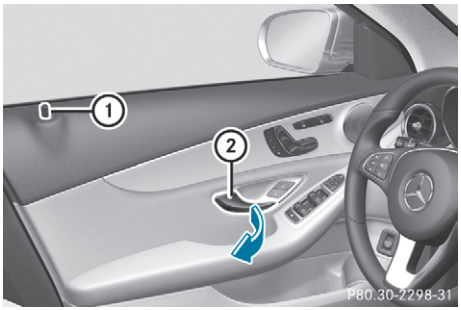

▶ Pull door handle ②.
If the door is locked, locking knob ① pops up. The door is unlocked and opens.

Centrally locking and unlocking the vehicle from the inside

You can centrally lock and unlock the vehicle from the inside. The switches are on the driver's door.

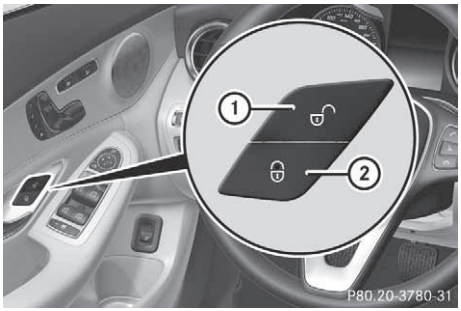

▶ **To unlock:** press button ①.

▶ **To lock:** press button ②.
When the front-passenger door is closed, the vehicle is locked.

This does not lock or unlock the fuel filler flap.

You cannot unlock the vehicle centrally from the inside if the vehicle has been locked with the key or KEYLESS-GO.

For all countries except the United Kingdom:

The doors can be opened from the inside. You can open the rear side doors from inside the vehicle only if they are not secured by the child-proof locks (▷ page 71).

If the vehicle has previously been locked with the key or with KEYLESS-GO, opening a door from the inside will trigger the anti-theft alarm system. Switch off the alarm (▷ page 82).

United Kingdom only: if the vehicle has been locked with the key or with KEYLESS-GO, the double lock function is activated as standard. It is then not possible to open the doors from inside the vehicle. You can deactivate the double lock function by deactivating the interior motion sensor (see Digital Owner's Manual). Opening/closing doors is then possible as follows: the doors can be opened from inside. You can open the rear side doors from inside the vehicle only if they are not secured by the child-proof locks (▷ page 71).

When a locked door is opened from inside the vehicle, the previous unlocking process will be observed if the vehicle has been:

- locked with the locking button for the central locking or
- locked automatically

The vehicle will be fully unlocked if it had previously been fully unlocked. Only the door that has been opened from the inside is unlocked if only the driver's door had previously been unlocked.

Automatic locking feature

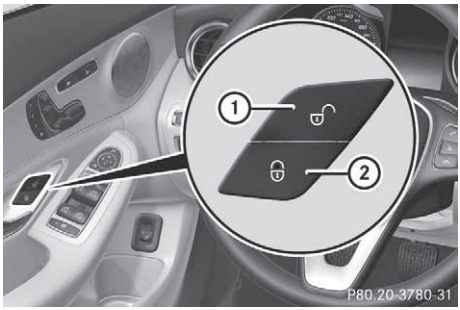

▶ **To deactivate:** press and hold button ① for approximately five seconds until a tone sounds.

▶ **To activate:** press and hold button ② for approximately five seconds until a tone sounds.

If you press one of the two buttons and do not hear a tone, the relevant setting has already been selected.

The vehicle is locked automatically when the ignition is switched on and the wheels are turning.

Therefore, you could be locked out if:

- the vehicle is being pushed
- the vehicle is being towed
- the vehicle is being tested on a dynamometer

You can also switch the automatic locking function on and off via the multimedia system (see the Digital Owner's Manual).

Locking/unlocking the driver's door with the emergency key element

In order to lock all of the vehicle's locks, begin by pressing the button for locking the vehicle from the inside while the driver's door is open. Then proceed to lock the driver's door using the emergency key element.

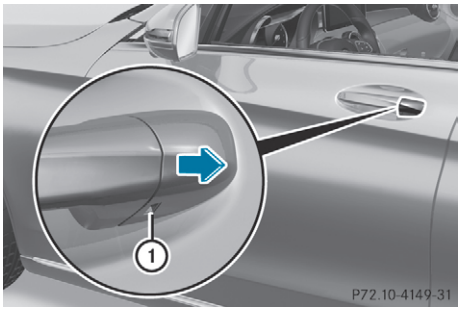

- Insert the emergency key element into opening ① in the protective cap.
- Pull and hold the door handle.
- Pull the protective cap on the emergency key as straight as possible away from the vehicle until it releases.
- Release the door handle.

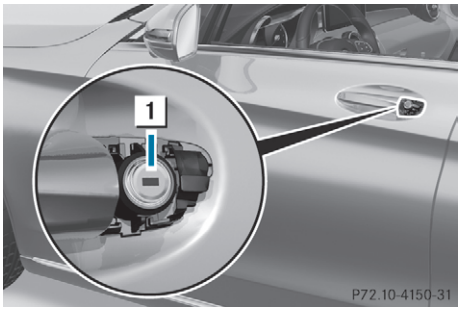

- **To lock:** turn the emergency key element clockwise as far as it will go to position 1.
- **To unlock:** turn the emergency key element anti-clockwise as far as it will go to position 1.

Right-hand-drive vehicle: turn the emergency key element in the opposite direction in both cases.

If you use the emergency key element to unlock and open the driver's door, the anti-theft alarm system will be triggered. Switch off the alarm (▷ page 82).

Luggage compartment

Important safety notes

⚠ WARNING

Combustion engines emit poisonous exhaust gases such as carbon monoxide. If the tailgate is open when the engine is running, particularly if the vehicle is moving, exhaust fumes could enter the passenger compartment. There is a risk of poisoning.

Turn off the engine before opening the tailgate. Never drive with the tailgate open.

⚠ WARNING

If objects, luggage or loads are not secured or not secured sufficiently, they could slip, tip over or be flung around and thereby hit vehicle occupants. There is a risk of injury, especially when braking or abruptly changing directions.

Always store objects so that they cannot be flung around. Secure objects, luggage or loads against slipping or tipping before the journey.

The tailgate swings upwards and to the rear when opened. Therefore, make sure that there is sufficient clearance above and behind the tailgate.

You will find details on the tailgate opening dimensions in the "Vehicle data" section (▷ page 402).

You can limit the opening angle of the tailgate (▷ page 98).

Do not leave the key in the luggage compartment. If you do so, you could lock yourself out.

Stow luggage or loads preferably in the luggage compartment. Observe the loading guidelines (▷ page 320).

Object detection with reversing function of the tailgate

Vehicles with remote tailgate closing:

The tailgate is equipped with automatic object detection with reversing function. If a solid object blocks or restricts the tailgate when automatically opening, this process is stopped. If a solid object blocks or restricts the tailgate when automatically closing, the tailgate automatically opens again slightly. Automatic object detection with reversing function is only an aid. It is not a substitute for your attention when opening and closing the tailgate.

⚠ **WARNING**

The reversing function does not react:

- to soft, light and thin objects, e.g. fingers
- over the last 8 mm of the closing path

The reversing feature cannot prevent someone being trapped in these situations in particular. There is a risk of injury.

When closing make sure that no body parts are in the closing area.

If someone is trapped:

- press the button on the key or
- pull or press the remote operating switch on the driver's door or
- press the closing or locking button on the tailgate or
- pull the handle on the tailgate

Vehicles with HANDS-FREE ACCESS:

It is also possible to stop the closing process by making a kicking movement under the rear bumper.

Opening and closing manually

Opening

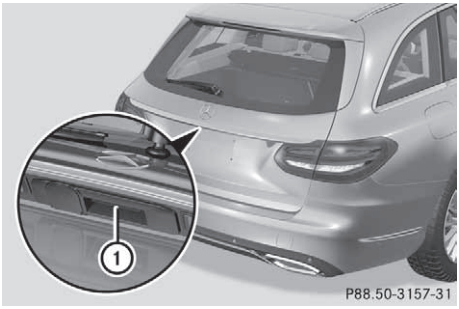

▶ Press the button on the key.

or

▶ Pull handle ①.
The tailgate opens.

Closing

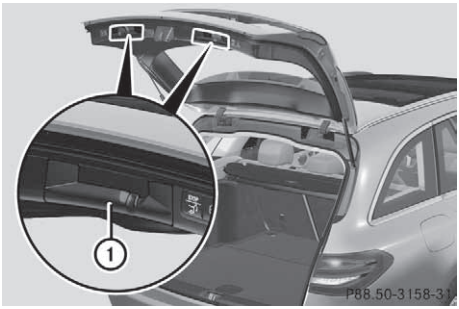

▶ Pull the tailgate down using recesses ① and push it closed.

▶ If necessary, lock the vehicle with the button on the key or with KEYLESS-GO (▷ page 86).

Opening and closing automatically from the outside

Important safety notes

⚠ **WARNING**

Combustion engines emit poisonous exhaust gases such as carbon monoxide. If the tailgate is open when the engine is running, particularly if the vehicle is moving, exhaust fumes

could enter the passenger compartment. There is a risk of poisoning.

Turn off the engine before opening the tailgate. Never drive with the tailgate open.

⚠ WARNING

Parts of the body could become trapped during automatic closing of the tailgate. Moreover, people, e.g. children, may be standing in the closing area or may enter the closing area during the closing process. There is a risk of injury.

Make sure that nobody is in the vicinity of the closing area during the closing process.

Use one of the following options to stop the closing process:

- press the button on the key
- pull or press the remote operating switch on the driver's door
- press the closing or locking button on the tailgate
- pull the handle on the tailgate

Vehicles with HANDS-FREE ACCESS:

It is also possible to stop the closing process by making a kicking movement under the rear bumper.

! The tailgate swings upwards and to the rear when opened. Therefore, make sure that there is sufficient clearance above and behind the tailgate.

Two warning tones sound while the tailgate is opening or closing.

You will find details on the tailgate opening dimensions in the "Vehicle data" section (▷ page 402).

Opening automatically

You can open the tailgate automatically using the key or the handle on the tailgate.

▶ Press and hold the button on the key until the tailgate opens.

or

▶ If the tailgate is unlocked, pull the tailgate handle and release it again immediately.

or

▶ With the tailgate stopped in an intermediate position, pull the tailgate upwards. You can release the tailgate as soon as the tailgate starts to open.

Closing automatically

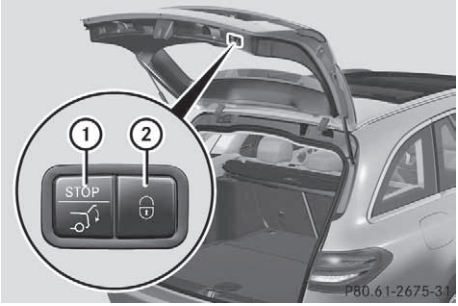

① Closing button
② Locking button

▶ Press closing button ① on the tailgate.

or

▶ Pull the tailgate downwards slightly. You can release the tailgate as soon as the tailgate starts to close.

When the driver's door is closed, you can simultaneously close the tailgate and lock the vehicle. To do this, the key must be in the KEYLESS-GO detection range to the rear of the vehicle.

▶ Press locking button ② on the tailgate. If KEYLESS-GO detects a key outside the vehicle, the tailgate closes. The vehicle is locked.

or

▶ **Vehicles with EASY-PACK tailgate and KEYLESS-GO or KEYLESS-GO start function:** if the key is located in the immediate vicinity of the vehicle, press the button on the key. You can release the button as soon as the tailgate starts to close.

If KEYLESS-GO detects a key only in the luggage compartment after it is closed, the tailgate is unlocked again.

If a second key is detected outside the vehicle, the tailgate remains locked.

If KEYLESS-GO detects a key only in the luggage compartment before the closing process starts, the tailgate remains open.

HANDS-FREE ACCESS

General notes

With KEYLESS-GO and HANDS-FREE ACCESS, you can open or close the tailgate or stop the process without using your hands. This is useful if you have your hands full. To do this, make a kicking movement under the bumper with your foot.

Observe the following points:

- Carry your KEYLESS-GO key with you. The key must be in the KEYLESS-GO detection range to the rear of the vehicle.
- When making the kicking movement, make sure that you are standing firmly on the ground and that there is sufficient clearance to the rear of the vehicle. You could otherwise lose your balance, e.g. on ice.

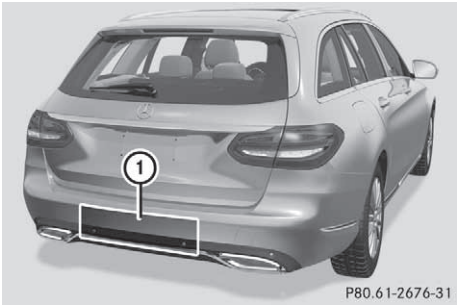

- Always ensure that you make the kicking movement only within the detection range of sensors ①.
- Stand at least 30 cm away from the rear area while doing so.
- Do not come into contact with the bumper while making the kicking movement. Otherwise, the sensors may not function correctly.
- HANDS-FREE ACCESS does not function during engine start.
- Dirt caused by road salt and snow build-up around sensors ① may restrict functionality.
  Using HANDS-FREE ACCESS with a prosthetic leg may restrict functionality.
- If a KEYLESS-GO key is in the KEYLESS-GO detection range to the rear of the vehicle, HANDS-FREE ACCESS could be triggered.

The tailgate could thus be opened or closed unintentionally, for example, if you:

- fold the ball coupling in or out
- couple or uncouple a trailer
- fit or remove a rear-mounted bicycle rack
- load/unload bicycles on/from a rear-mounted bicycle rack
- sit on the edge of the luggage compartment
- set down or lift up an object behind the vehicle
- polish the rear of the vehicle

Do not carry the KEYLESS-GO key with you in such situations. This will prevent unintentional opening or closing of the tailgate.

Important safety notes

⚠ WARNING

The vehicle exhaust system can become very hot. If you use HANDS-FREE ACCESS, you could burn yourself by touching the exhaust system. There is a risk of injury. Always ensure that you make the kicking movement only within the detection range of the sensors .

! If the key is within the rear detection range of KEYLESS-GO, the following situations, for example, could lead to the unintentional opening of the tailgate:

- when using an automatic car wash
- when using a high-pressure cleaner

Make sure that the key is at least 3 m away from the vehicle.

Operation

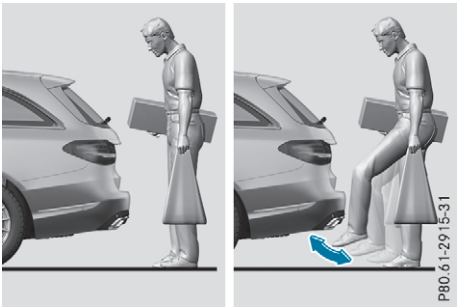

- **To open or close:** kick into sensor detection range ① under the bumper with your foot. Two warning tones sound while the tailgate is opening or closing.
- **If the tailgate does not open or close after several attempts:** wait at least ten seconds then kick under the bumper once again.

If you hold your foot under the bumper for too long, the tailgate does not open or close. Repeat the kicking movement more quickly if this occurs.

To stop the opening or closing process, you have the following options:

- kick with your foot into sensor detection range ① under the bumper
- pull the handle on the outside of the tailgate
- press the closing button on the tailgate
- press the button on the key

If the tailgate closing process has been stopped:

- kick your foot under the bumper again and the tailgate will open

If the tailgate opening process has been stopped:

- kick your foot under the bumper again and the tailgate will close

Opening and closing automatically from the inside

Important safety notes

⚠ WARNING

Combustion engines emit poisonous exhaust gases such as carbon monoxide. If the tailgate is open when the engine is running, particularly if the vehicle is moving, exhaust fumes could enter the passenger compartment. There is a risk of poisoning.

Turn off the engine before opening the tailgate. Never drive with the tailgate open.

⚠ WARNING

Parts of the body could become trapped during automatic closing of the tailgate. In addition, people may be standing in the closing area or may enter the closing area, e.g. children, during the closing procedure. There is a risk of injury.

Make sure that nobody is in the vicinity of the closing area during the closing process. Release the remote operating switch immediately if somebody becomes trapped. To reopen the tailgate pull on the remote operating switch.

Vehicles with HANDS-FREE ACCESS:

It is also possible to stop the closing process by making a kicking movement under the rear bumper.

! The tailgate swings upwards and to the rear when opened. Therefore, make sure that there is sufficient clearance above and behind the tailgate.

Two warning tones sound while the tailgate is opening or closing.

You will find details on the tailgate opening dimensions in the "Vehicle data" section (▷ page 402).

Opening and closing



- **To open:** pull remote operating switch ① for tailgate until tailgate opens.
- **To close:** Turn the key to position 1 or 2 in the ignition lock.
- Press and hold remote operating switch for tailgate ① until tailgate is completely closed.

When the vehicle is stationary, you can close the tailgate from the driver's seat. When the vehicle is also unlocked, you can also open the tailgate from inside.

Limiting the opening angle of the tailgate

General notes

! Make sure there is sufficient clearance to open the tailgate fully when setting the opening angle. The tailgate could otherwise be damaged. Ideally, set the opening angle outside.

You can limit the opening angle of the tailgate. This is possible in the top half of its opening range, up to approximately 20 cm before the stop.

To open the tailgate fully, pull the handle on the outside of the tailgate again after it has stopped automatically. This does not delete the stored position.

Switching on

- ▶ **To open the tailgate:** pull the handle on the tailgate.
- ▶ **To stop the opening process at the desired position:** press the closing button on the tailgate or pull the handle on the outside of the tailgate again.
- ▶ **To store the position:** press and hold the closing button on the tailgate until you hear a short tone.
  The opening angle limiter is activated. The tailgate then stops in the stored position when opened.

Switching off

- ▶ Press and hold the closing button on the tailgate until two short tones sound.

Unlocking the tailgate using the emergency key element

General notes

Use the emergency key element if the tailgate can no longer be unlocked:

- using the key
- using HANDS-FREE ACCESS
- using the remote operating switch on the door control panel

! The tailgate swings upwards and to the rear when opened. Therefore, make sure that there is sufficient clearance above and behind the tailgate.

You will find details on the tailgate opening dimensions in the "Vehicle data" section (▷ page 402).

To unlock

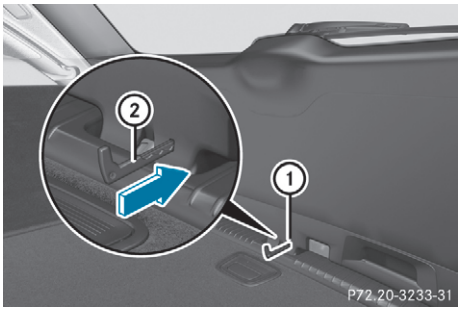

- ▶ Remove the luggage compartment cover (▷ page 326).
- ▶ Fold the rear seat backrest forwards (▷ page 323).
- ▶ Insert emergency key element ② into opening ① in the trim and push it in.
- ▶ Open the tailgate.

When you lock the vehicle, the luggage compartment is also locked again.

Side windows

Important safety notes

⚠ **WARNING**

While opening the side windows, body parts could become trapped between the side window and the door frame as the side window moves. There is a risk of injury.

Make sure that nobody touches the side window during the opening procedure. If somebody becomes trapped, release the switch or pull the switch to close the side window again.

⚠ **WARNING**

While closing the side windows, body parts in the closing area could become trapped. There is a risk of injury.

When closing make sure that no parts of the body are in the closing area. If somebody becomes trapped, release the switch or press the switch to open the side window again.

⚠ **WARNING**

If children operate the side windows they could become trapped, particularly if they are left unsupervised. There is a risk of injury.

Activate the override feature for the rear side windows. When leaving the vehicle, always take the key with you and lock the vehicle. Never leave children unattended in the vehicle.

Side window reversing feature

The side windows are equipped with an automatic reversing feature. If a solid object blocks or restricts a side window from travelling upwards during the automatic closing process, the side window opens again automatically. During the manual closing process, the side window only opens again automatically after the corresponding switch is released. The automatic reversing feature is only an aid and is no substitute for your attention when closing a side window.

⚠ **WARNING**

The reversing function does not react:

- to soft, light and thin objects, e.g. small fingers
- while resetting

This means that the reversing feature cannot prevent someone being trapped in these situations. There is a risk of injury.

When closing, make sure that no parts of the body are in the closing area. If someone becomes trapped, press the switch to open the side window again.

Opening and closing the side windows

The switches for all side windows are located on the driver's door. There is also a switch on each door for the corresponding side window.

The switches on the driver's door take precedence.

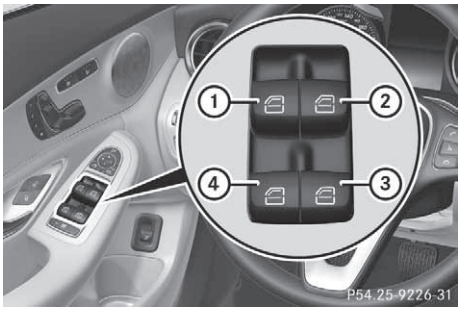

① Front left
② Front right
③ Rear right
④ Rear left

- ▶ Turn the key to position 1 or 2 in the ignition lock.
- ▶ **To open manually:** press and hold the corresponding switch.
- ▶ **To open fully:** press the button beyond the point of resistance and release it. Automatic operation is started.
- ▶ **To close manually:** pull the corresponding button and hold it.
- ▶ **To close fully:** pull the button beyond the point of resistance and release it. Automatic operation is started.
- ▶ **To interrupt automatic operation:** press/pull the corresponding switch again.

If you push/pull the switch beyond the point of resistance and release, automatic operation is started in the corresponding direction. You can stop automatic operation by pressing/pulling again.

You can continue to operate the side windows after switching off the engine or removing the key. This function remains active for five minutes or until you open a front door.

The side windows cannot be operated from the rear when the override feature for the side windows is activated (▷ page 71).

Information on opening and closing the roller sunblinds on the rear side windows (▷ page 333).

Convenience opening feature

General notes

If the key is in the immediate vicinity of the vehicle, the "convenience opening" feature is available.

Vehicles with KEYLESS-GO or KEYLESS-GO start function: you can ventilate the vehicle before you start driving.

To do this, the key is used to carry out the following functions simultaneously:

- unlock the vehicle
- open the side windows
- open the panorama sliding sunroof and the roller sunblind
- switch on the seat ventilation for the driver's seat

The "Convenience opening" feature is also available when the vehicle is unlocked.

Convenience opening feature

- ▶ Press and hold the button on the key until the side windows and the panorama sliding sunroof are in the desired position. If the roller sunblinds of the panorama sliding sunroof are closed, the roller sunblinds are opened first.
- ▶ Press and hold the button again until the panorama sliding sunroof is in the desired position.
- ▶ **To interrupt convenience opening:** release the button.

Convenience closing feature

Important safety notes

⚠ WARNING

When the convenience closing feature is operating, parts of the body could become trapped in the closing area of the side window and the sliding sunroof. There is a risk of injury.

Observe the complete closing procedure when the convenience closing feature is operating. When closing make sure that no parts of the body are in the closing area.

Vehicles with KEYLESS-GO or KEYLESS-GO start function: if the key is in the immediate vicinity of the vehicle, the "convenience closing" feature is available.

When you lock the vehicle, you can simultaneously:

- close the side windows
- close the panorama sliding sunroof

You can then close the roller sunblinds.

Notes on the automatic reversing function for:

- the side windows (▷ page 99)
- the panorama sliding sunroof (▷ page 102)

Using the key

- ▶ Press and hold the button until the side windows and the panorama sliding sunroof are fully closed.
- ▶ Make sure that all the side windows and the panorama sliding sunroof are closed.
- ▶ Press and hold the button again until the roller sunblinds of the panorama sliding sunroof are closed.
- ▶ **To interrupt convenience closing:** release the button.

Using KEYLESS-GO

The driver's door and the door on which the handle is used must both be closed. The key must be outside the vehicle. The gap between the key and the corresponding door handle should not be greater than 1 m.

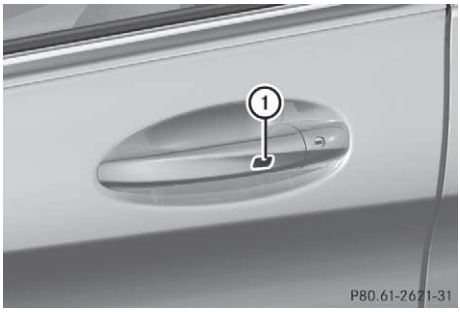

- ▶ Touch recessed sensor surface ① on the door handle until the side windows and the panorama sliding sunroof are fully closed.
  Make sure you touch only recessed sensor surface ①.
- ▶ Make sure that all the side windows and the panorama sliding sunroof are closed.
- ▶ Touch recessed sensor surface ① on the door handle again until the roller sunblinds of the panorama sliding sunroof close.
- ▶ **To interrupt convenience closing:** release recessed sensor surface ① on the door handle.

Resetting the side windows

If a side window can no longer be closed fully, you must reset it.

- ▶ Close all doors.
- ▶ Turn the key to position 1 or 2 in the ignition lock.
- ▶ Pull the corresponding switch on the door control panel until the side window is completely closed (▷ page 99).
- ▶ Hold the switch for an additional second.

If the side window opens again slightly:

- ▶ Immediately pull the corresponding switch on the door control panel until the side window is completely closed (▷ page 99).
- ▶ Hold the switch for an additional second.
- ▶ If the corresponding side window remains closed after the button has been released, the side window has been reset correctly. If this is not the case, repeat the steps above.

Problems with the side windows

⚠ WARNING

If you close a side window again immediately after it has been blocked or reset, the side window closes with increased or maximum force. The reversing function is then not active. Parts of the body could be trapped in the closing area in the process. This poses an increased risk of injury or even fatal injury.

Make sure that no parts of the body are in the closing area. To stop the closing process, release the switch or push the switch again to reopen the side window.

Problem	Possible causes/consequences and ▶ Solutions
A side window cannot be closed because it is blocked by objects, e.g. leaves in the window guide.	▶ Remove the objects. ▶ Close the side window.
A side window cannot be closed and you cannot see the cause.	If a side window is obstructed during closing and reopens again slightly: ▶ Immediately after the window blocks, pull the corresponding switch again until the side window has closed. The side window is closed with increased force. If a side window is obstructed again during closing and reopens again slightly: ▶ Immediately after the window blocks, pull the corresponding switch again until the side window has closed. The side window is closed without the automatic reversing feature.

Sliding sunroof

Important safety notes

In this section, the term "sliding sunroof" refers to the panorama sliding sunroof.

⚠ WARNING

While opening and closing the sliding sunroof, body parts in close proximity could become trapped. There is a risk of injury.

Make sure that no body parts are in close proximity during the opening and closing procedures.

If somebody becomes trapped:

- release the switch immediately, or
- during automatic operation, press the switch briefly in any direction

The opening or closing procedure will be stopped.

⚠ WARNING

If children operate the sliding sunroof they could become trapped, particularly if they are left unsupervised. There is a risk of injury.

When leaving the vehicle, always take the key with you and lock the vehicle. Never leave children unattended in the vehicle.

! Only open the panorama sliding sunroof if it is free of snow and ice. Otherwise, malfunctions may occur.

Do not allow anything to protrude from the sliding sunroof. Otherwise, the seals could be damaged.

Resonance noises can occur in addition to the usual airflow noises when the sliding sunroof is open. They are caused by minor pressure fluctuations in the vehicle interior. Change the position of the sliding sunroof or open a side window slightly to reduce or eliminate these noises.

Only for vehicles with panorama sliding sunroof:

⚠ WARNING

At high speeds the raised sliding sunroof automatically lowers slightly at the rear. This could trap you or other persons. There is a risk of injury. Make sure that nobody reaches into the sweep of the sliding sunroof whilst the vehicle is in motion.

If somebody becomes trapped, immediately pull back the sliding sunroof switch. The sliding sunroof lifts during opening.

Sliding sunroof reversing feature

In this section, the term "sliding sunroof" refers to the panorama sliding sunroof.

The sliding sunroof is equipped with an automatic reversing function. If a solid object blocks or restricts the sliding sunroof during the closing process, the sliding sunroof opens again automatically. The automatic reversing function is only an aid and is not a substitute for your attention when closing the sliding roof.

⚠ WARNING

The reversing feature does not react:

- to soft, light and thin objects, e.g. small fingers
- over the last 4 mm of the closing movement
- during resetting
- when closing the sliding sunroof again manually immediately after automatic reversing

This means that the reversing feature cannot prevent someone being trapped in these situations. There is a risk of injury.

When closing make sure that no body parts are in the closing area.

If someone is trapped:

- release the switch immediately or
- press the switch in any direction during the automatic closing process

The closing process is stopped.

Operating the panorama sliding sunroof

Opening and closing

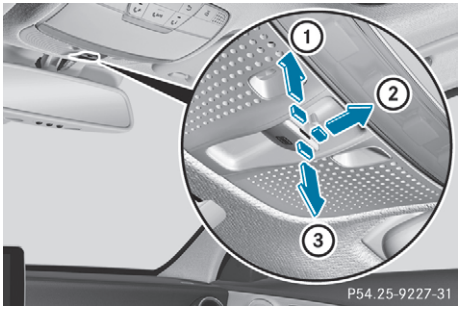

① To raise
② To open
③ To close/lower

The panorama sliding sunroof can be operated only when the roller sunblinds are open.

▶ Turn the key to position 1 or 2 in the ignition lock.
▶ Push or pull the switch in the corresponding direction.

If you push or pull the switch beyond the point of resistance, automatic operation is started in the corresponding direction. You can stop automatic operation by pushing or pulling again.

If the panorama sliding sunroof is raised at the rear, it automatically lowers slightly at higher speeds. The noise level in the vehicle interior is reduced as a result. At low speeds, it rises again automatically.

You can also temporarily deactivate automatic lowering. To do so, press the button. The panorama sliding sunroof rises again automatically.

You can continue to operate the panorama sliding sunroof after switching off the engine or removing the key. This function remains active for five minutes or until you open a front door.

If a roof carrier is fitted, the panorama sliding sunroof cannot be opened. In order to allow ventilation of the vehicle interior, you can still raise the panorama sliding sunroof. If a roof carrier approved by Mercedes-Benz makes contact with the panorama sliding sunroof, the sunroof will lower slightly but remain raised at the rear.

Rain-closing feature when the engine is switched off

When the key is in position 0 in the ignition lock or is removed, the panorama sliding sunroof closes automatically

- if it starts to rain
- at extreme outside temperatures
- after six hours
- if there is a malfunction in the power supply

The panorama sliding sunroof remains raised at the rear in order to allow ventilation of the vehicle interior.

If the panorama sliding sunroof is obstructed when being closed by the rain-closing feature, it opens again slightly. The rain-closing feature is then deactivated.

The panorama sliding sunroof does not close if:

- it is raised at the rear
- it is blocked
- no rain is falling on the area of the windscreen being monitored by the rain sensor, e.g. because the vehicle is under a bridge or in a carport

Rain-closing feature when driving

The raised panorama sliding sunroof automatically lowers when you are driving if it starts to rain. The sliding sunroof is lowered depending on:

- the road speed
- the intensity of the rain

You can manually cancel the automatic closing procedure. Push or pull the switch in any direction.

To raise the panorama sliding sunroof again, push the switch in direction ①.

The "Rain-closing feature when driving" function is deactivated until you:

- push or pull the switch in any direction or
- turn the key to another position in the ignition lock (▷ page 153)

Operating the panorama sliding sunroof roller sunblinds

Important safety notes

⚠ WARNING

Parts of the body could become trapped between the roller sunblind and frame or sliding sunroof during automatic opening or closing. There is a risk of injury.

When opening or closing, make sure that no body parts are in the sweep of the roller sunblind.

If someone is trapped:

- release the switch immediately or
- press the switch in any direction during the automatic opening/closing process

The opening/closing process is stopped.

The roller sunblinds shield the vehicle interior from sunlight. The roller sunblinds can be opened and closed only when the panorama sliding sunroof is closed.

Roller sunblind reversing function

The roller sunblinds are equipped with an automatic reversing function. If a solid object blocks or restricts the roller sunblind during the closing process, the roller sunblind opens again automatically. However, the automatic reversing function is only an aid, not a substitute for your attention when closing the roller sunblind.

⚠ WARNING

The reversing function does not react in particular to soft, light and thin objects, e.g. small fingers. This means that the reversing feature cannot prevent someone being trapped in these situations. There is a risk of injury.

When closing the roller sunblind, make sure that no body parts are in the sweep.

If someone is trapped:

- release the switch immediately or
- press the switch in any direction during the automatic closing process

The closing process is stopped.

Opening and closing roller sunblinds

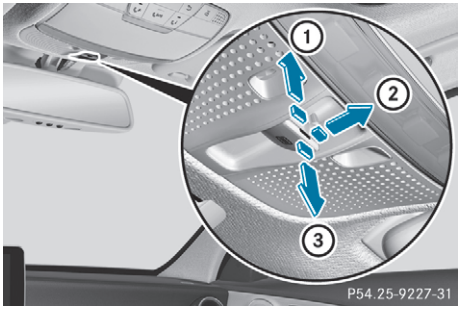

① To open
② To open
③ To close

You can close the roller sunblinds only when the panorama sliding sunroof is closed.

▶ Turn the key to position 1 or 2 in the ignition lock.
▶ Push the switch in direction ①.
Both roller sunblinds open, then the sliding roof is raised.
▶ Pull the switch in direction ②.
The sunblinds open.
▶ Pull the switch in direction ③.
The roller sunblinds close when the panorama sliding roof is closed.

If you push or pull the switch beyond the point of resistance, automatic operation is started in the corresponding direction. You can stop automatic operation by pushing or pulling again.

Resetting the panorama sliding sunroof or the front roller sunblind

! If the panorama sliding sunroof and the roller sunblinds cannot be fully opened or closed after resetting, contact a qualified specialist workshop.

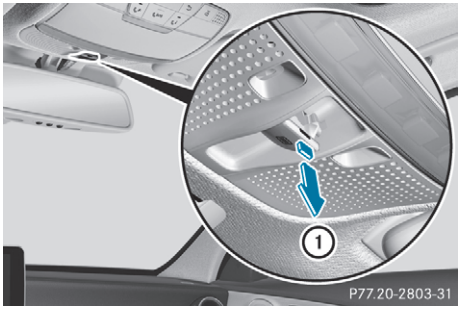

If the panorama sliding sunroof or the roller sunblinds do not move smoothly, reset the panorama sliding sunroof or the roller sunblinds.

- ▶ Turn the key to position 1 or 2 in the ignition lock.
- ▶ Pull the switch repeatedly to the point of resistance in the direction of arrow ① until the panorama sliding sunroof is fully closed.
- ▶ Keep the switch pulled for an additional second.
- ▶ Pull the switch repeatedly in the direction of arrow ① until the roller sunblinds are closed.
- ▶ Keep the switch pulled for an additional second.
- ▶ Make sure that the panorama sliding sunroof and the roller sunblinds can be fully opened and closed again.
- ▶ If this is not the case, repeat the steps above.

Problems with the sliding sunroof

In this section, the term "sliding sunroof" refers to the panorama sliding sunroof.

⚠ WARNING

If you close the sliding sunroof again immediately after it has been blocked or reset, the sliding sunroof closes with increased or maximum force. The reversing feature is then not active. Parts of the body could be trapped in the closing area in the process. This poses an increased risk of injury or even fatal injury.

Make sure that no parts of the body are in the closing area.

If someone is trapped:

- release the switch immediately or
- press the switch in any direction during the automatic closing process

The closing process is stopped.

Problem	Possible causes/consequences and ▶ Solutions
The panorama sliding sunroof cannot be closed and you cannot see the cause.	If the panorama sliding sunroof is obstructed during closing and reopens again slightly: ▶ Immediately after it blocks, pull the  switch down again to the point of resistance until the panorama sliding sunroof is closed. The panorama sliding sunroof is closed with increased force. If the panorama sliding sunroof is obstructed again during closing and reopens again slightly: ▶ Immediately after it blocks, pull the  switch down again to the point of resistance until the panorama sliding sunroof is closed. The panorama sliding sunroof is closed without the automatic reversing function.

Correct driver's seat position

⚠ WARNING

You could lose control of the vehicle while driving if you:

- adjust the driver's seat, steering wheel or mirrors
- fasten the seat belt

There is a risk of an accident.

Adjust the driver's seat, head restraint, steering wheel and mirrors and fasten your seat belt before starting the engine.

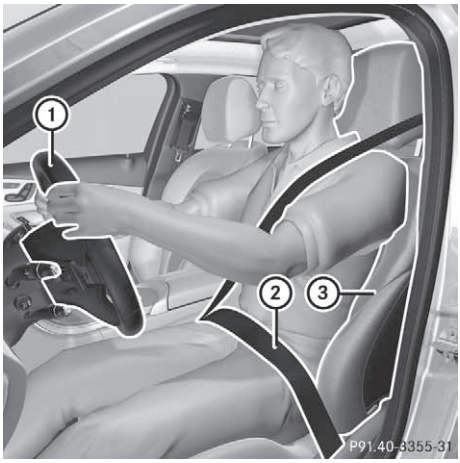

Observe the following when adjusting steering wheel ①, seat belt ② and driver's seat ③:

- you are as far away from the driver's airbag as possible
- you are sitting in an upright position
- your thighs are gently supported by the seat cushion
- your legs are not entirely stretched and you can depress the pedals properly
- the back of your head is supported at eye level by the centre of the head restraint
- you can hold the steering wheel with your arms slightly bent
- you can move your legs freely
- you can see all the displays on the instrument cluster clearly
- you have a good overview of traffic conditions
- the seat belt is pulled snugly against the body and must be routed across the centre of your shoulder and across your hips in the pelvic area

Further related subjects:

- Adjusting the seats mechanically and electrically (▷ page 109).
- Adjusting the seats electrically (▷ page 109).
- Adjusting the steering wheel mechanically (▷ page 114).
- Adjusting the steering wheel electrically (▷ page 114).
- Fastening the seat belt correctly (▷ page 49).
- Adjusting the rear-view mirror and exterior mirrors (▷ page 116).
- You can store the seat, steering wheel, exterior mirror and head-up display settings with the memory function (▷ page 119).

Seats

Important safety notes

⚠ WARNING

If children adjust the seats, they could become trapped, especially if they are unattended. There is a risk of injury.

When leaving the vehicle, always take the key with you and lock the vehicle. Never leave children unattended in the vehicle.

The seats can be adjusted when there is no key in the ignition lock.

⚠ WARNING

When adjusting a seat, you or another vehicle occupant could become trapped by the guide rail of the seat, for instance. There is a risk of injury.

Make sure that no one has any part of their body within the sweep of the seat when adjusting it.

Observe the safety notes on "Airbags" (▷ page 50) and "Children in the vehicle" (▷ page 60).

⚠ WARNING

The head restraints cannot provide the intended protection unless they are fitted and adjusted correctly. There is an increased risk of injury to the head and neck in the event of an accident or sudden braking, for example.

Always drive with the head restraints fitted. Ensure that the centre of the head restraints support the back of each vehicle occupant's head at eye level before driving off.

Do not interchange the head restraints of the front and rear seats. Otherwise, you will not be able to adjust the height and angle of the head restraints correctly.

Adjust the head restraint fore-and-aft position so that it is as close as possible to the back of your head.

⚠ WARNING

If the driver's seat is not correctly engaged, it could unexpectedly move while driving. This could cause you to lose control of the vehicle. There is a risk of an accident.

Always ensure that the driver's seat is engaged before starting the vehicle.

⚠ WARNING

You could lose control of the vehicle while driving if you:

- adjust the driver's seat, steering wheel or mirrors
- fasten the seat belt

There is a risk of an accident.

Adjust the driver's seat, head restraint, steering wheel and mirrors and fasten your seat belt before starting the engine.

⚠ WARNING

If you adjust the seat height carelessly, you or other vehicle occupants could be trapped and thereby injured. Children in particular could accidentally press the electrical seat adjustment buttons and become trapped. There is a risk of injury.

While moving the seats, make sure that your hands or other body parts do not get under the lever assembly of the seat adjustment system.

⚠ WARNING

The seat belt does not offer the intended level of protection if you have not moved the backrest to an almost vertical position. When braking or in the event of an accident, you could slide underneath the seat belt and sustain abdomen or neck injuries, for example. This poses an increased risk of injury or even fatal injury.

Adjust the seat properly before beginning your journey. Always ensure that the backrest is in an almost vertical position and that the shoulder section of your seatbelt is routed across the centre of your shoulder.

! To avoid damage to the seats and the seat heating, observe the following information:

- do not spill any liquids on the seats. If liquid is spilled on the seats, dry them as soon as possible.
- if the seat covers are damp or wet, do not switch on the seat heating. The seat heating should also not be used to dry the seats.
- clean the seat covers as recommended; see "Interior care".
- do not transport heavy loads on the seats. Do not place sharp objects on the seat cushions, e.g. knives, nails or tools. The seats should only be occupied by passengers, if possible.
- when the seat heating is in operation, do not cover the seats with insulating materials, e.g. blankets, coats, bags, seat covers, child seats or booster seats.

! Make sure that there are no objects in the footwell under or behind the seats when moving the seats back. There is a risk that the seats and/or the objects could be damaged.

i The rear seat head restraints can be removed (▷ page 111).

For more information, contact a qualified specialist workshop.

i Related topic:

- EASY-PACK quickfold rear bench seat (▷ page 323)

Adjusting the seats mechanically and electrically

Adjusting the front seat

Vehicles without the seating comfort package

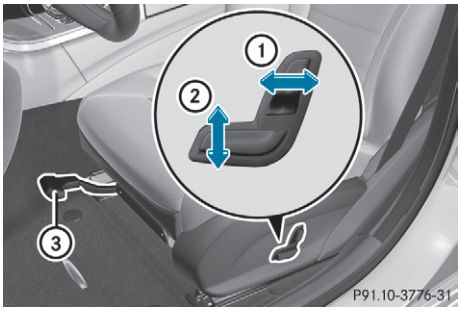

① Backrest angle
② Seat height
③ Seat fore-and-aft adjustment

Vehicles with the seating comfort package

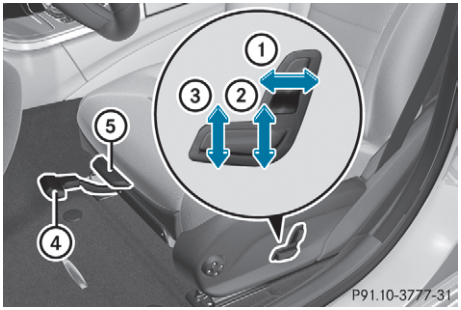

① Backrest angle
② Seat height
③ Seat cushion angle
④ Seat fore-and-aft adjustment
⑤ Seat cushion length

ⓘ In vehicles with the seating comfort package, the seat cushion length is adjusted mechanically.

Adjusting the seat fore-and-aft position

Vehicles without the seating comfort package

- ▶ Lift lever ③ and slide the seat forwards or backwards.
- ▶ Release lever ③ again.
  Ensure that the seat engages audibly.

Vehicles with the seating comfort package

- ▶ Lift lever ④ and slide the seat forwards or backwards.
- ▶ Release lever ④ again.
  Ensure that the seat engages audibly.

Adjusting the seat cushion length mechanically

- ▶ Lift lever ⑤ and slide the seat cushion forwards or backwards.
- ▶ Release lever ⑤ again.
  The seat cushion engages.

ⓘ Mechanical seat cushion length adjustment is available in vehicles with the seating comfort package.

Adjusting the seats electrically

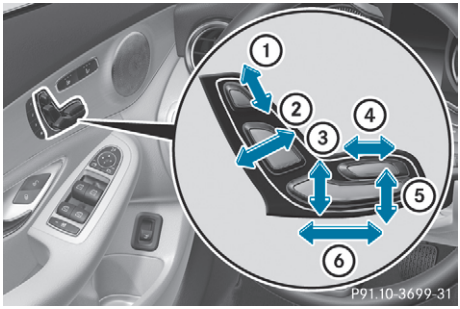

Electrically adjustable seats with memory function

① Head restraint height
② Backrest angle
③ Seat height
④ Seat cushion length
⑤ Seat cushion angle
⑥ Seat fore-and-aft adjustment

Further related subjects:

- You can store the seat settings using the memory function (▷ page 119).
- If PRE-SAFE® is triggered, the front-passenger seat will be moved to a better position if it was previously in an unfavourable position (▷ page 59).
- When the seat is moved forwards or backwards, the head restraint is moved up or down automatically.

Vehicles with AMG Performance Seat: the height of the head restraint cannot be adjusted.

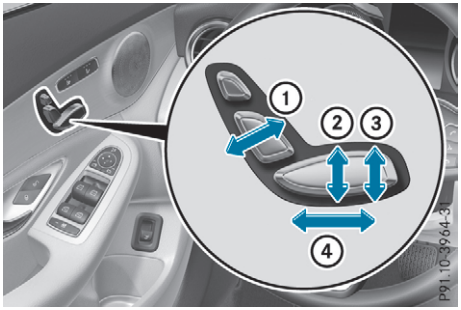

Electrically adjustable seats without memory function

① Backrest angle
② Seat height
③ Seat cushion angle
④ Seat fore-and-aft adjustment

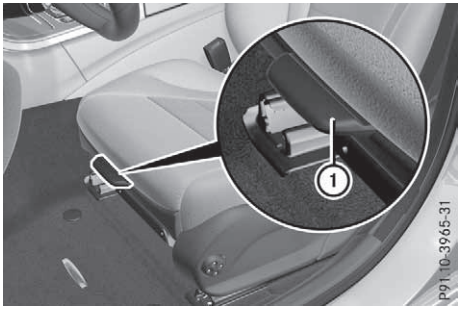

Electrically adjustable seats without memory function

① Seat cushion length

▶ Lift lever ① and slide the seat cushion forwards or backwards.
▶ Release lever ① again.
The seat cushion engages.

Adjusting the head restraints

Important safety notes

⚠ WARNING

You could lose control of the vehicle while driving if you:

- adjust the driver's seat, steering wheel or mirrors
- fasten the seat belt

There is a risk of an accident.

Adjust the driver's seat, head restraint, steering wheel and mirrors and fasten your seat belt before starting the engine.

⚠ WARNING

The head restraints cannot provide the intended protection unless they are fitted and adjusted correctly. There is an increased risk of injury to the head and neck in the event of an accident or sudden braking, for example.

Always drive with the head restraints fitted. Ensure that the centre of the head restraints support the back of each vehicle occupant's head at eye level before driving off.

General notes

Observe the important safety notes (▷ page 107).

Do not interchange the head restraints of the front and rear seats. Otherwise, you will not be able to adjust the height and angle of the head restraints to the correct position.

Adjusting the head restraint height mechanically

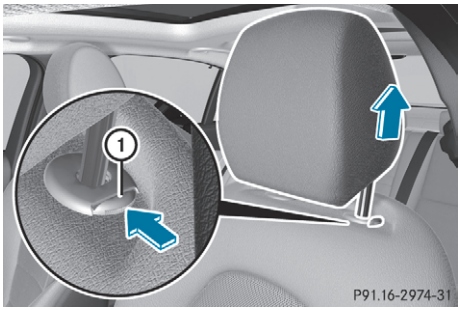

- **To raise:** pull the head restraint up to the desired position.
- **To lower:** press release catch ① in the direction of the arrow and push the head restraint down to the desired position.

Adjusting the head restraint fore-and-aft position mechanically

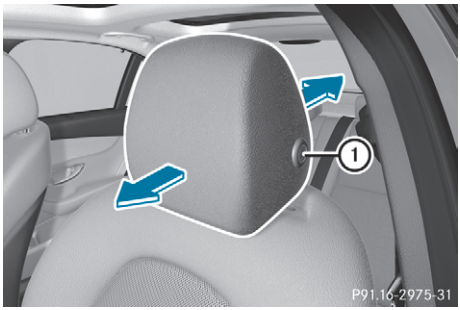

This function allows you to adjust the distance between the head restraint and the back of the head.

- **To move forwards:** pull the head restraint forwards in the direction of the arrow until it engages in the desired position.
- **To move backwards:** press and hold release catch ①.
- Push the head restraint back.
- Release the release catch once the head restraint is in the desired position.
- Ensure that the head restraint has engaged properly.

Adjust the head restraint fore-and-aft position so that it is as close as possible to the back of your head.

Adjusting the head restraints electrically

- **To adjust the head restraint height:** slide the switch for the head restraint adjustment (▷ page 109) up or down in the direction of the arrow.

Vehicles with AMG Performance Seat: the height of the head restraint cannot be adjusted.

Adjusting the rear-seat head restraint height

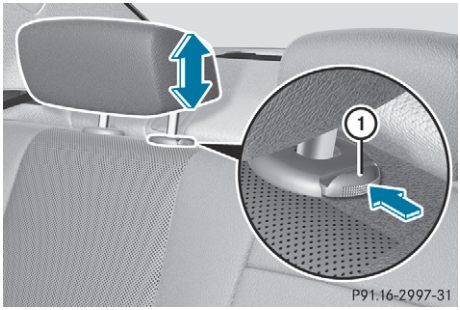

- If the head restraint is fully lowered, it is necessary to press release catch ① first.
- **To raise:** pull the head restraint up to the desired height.
- **To lower:** press release catch ① and push the head restraint down until it is in the desired position.

Fitting and removing rear head restraints

- Release the rear seat backrest and fold it slightly forwards (▷ page 324).
- **To remove:** pull the head restraint up to the stop.
- Press release catch ① and pull the head restraint out of the guides.
- **To refit:** insert the head restraint so that the notches on the bar are on the left when viewed in the direction of travel.
- Push the head restraint down until you hear it engage in position.
- Fold back the rear seat backrest until it engages.

Adjusting the 4-way lumbar support

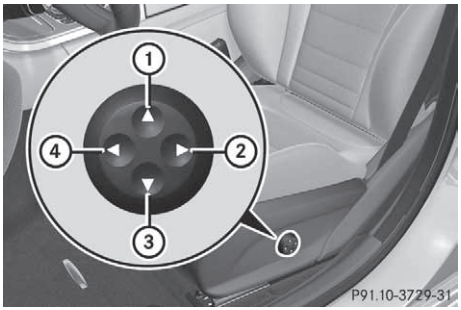

① To raise the backrest contour
② To soften the backrest contour
③ To lower the backrest contour
④ To harden the backrest contour

You can adjust the contour of the front seat backrests individually to provide optimum support for your back.

Adjusting the AMG Performance seat

To adjust the contour of the seat and for improved lateral support, you can adjust the front seats individually.

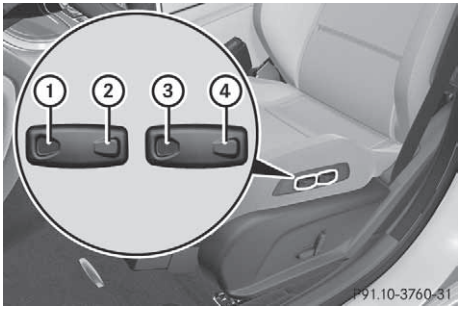

Adjusting the side bolsters of the seat cushion

- ▶ **To set narrower:** press ① button.
- ▶ **To set wider:** press ② button.

To adjust the side bolsters of the seat backrest

- ▶ **To set narrower:** press ③ button.
- ▶ **To set wider:** press ④ button.

Switching the seat heating on/off

Switching on/off

⚠ WARNING

If you repeatedly switch on seat heating, the seat cushion and backrest padding may become very hot. The health of vehicle occupants with limited temperature sensitivity or a limited ability to react to high temperatures may be affected or they may even suffer burn-like injuries. There is a risk of injury.

Therefore, do not switch on the seat heating repeatedly.



The three red indicator lamps in the button indicate the heating level you have selected.

The system automatically switches down from level **3** to level **2** after approximately eight minutes.

The system automatically switches down from level **2** to level **1** after approximately ten minutes.

The system automatically switches off approximately 20 minutes after it is set to level **1**.

- ▶ Turn the key to position 1 or 2 in the ignition lock (▷ page 153).
- ▶ **To switch on:** press button ① repeatedly until the desired heating level is set.
- ▶ **To switch off:** press button ① repeatedly until all the indicator lamps go out.

ⓘ If the vehicle battery voltage is too low, the seat heating may switch off.

ⓘ If drive program **E** is selected, the power of the seat heating is reduced:

- Manual transmission (▷ page 165)
- Automatic transmission (▷ page 169)

Switching the seat ventilation on/off

Switching on/off



The blue indicator lamps in the button indicate the ventilation level you have selected.

- ▶ Turn the key to position 1 or 2 in the ignition lock (▷ page 153).
- ▶ **To switch on:** press button ① repeatedly until the desired ventilation level is set.
- ▶ **To switch off:** press button ① repeatedly until all the indicator lamps go out.

ⓘ If the vehicle battery voltage is too low, the seat ventilation may switch off.

ⓘ You can open the side windows and the sliding sunroof using the "Convenience opening" feature (▷ page 100). The seat ventilation of the driver's seat automatically switches to the highest level.

ⓘ When the vehicle is stationary, the fan speed may be reduced automatically. This reduces the noise of the seat ventilation.

Problems with the seat heating / seat ventilation

Problem	Possible causes/consequences and ▶ Solutions
The seat heating or seat ventilation has switched off prematurely or cannot be switched on.	The on-board voltage is too low because too many electrical consumers are switched on. ▶ Switch off electrical consumers that you do not need, such as the rear window heating or interior lighting. Once the battery is sufficiently charged, the seat heating or seat ventilation can be switched back on manually.

Steering wheel

Important safety notes

⚠ **WARNING**

You could lose control of the vehicle while driving if you:

- adjust the driver's seat, steering wheel or mirrors
- fasten the seat belt

There is a risk of an accident.

Adjust the driver's seat, head restraint, steering wheel and mirrors and fasten your seat belt before starting the engine.

⚠ **WARNING**

Children could become trapped by the steering wheel if they adjust it. There is a risk of injury.

When leaving the vehicle, always take the key with you and lock the vehicle. Never leave children unattended in the vehicle.

The electrically adjustable steering wheel can still be adjusted when there is no key in the ignition lock.

Adjusting the steering wheel mechanically

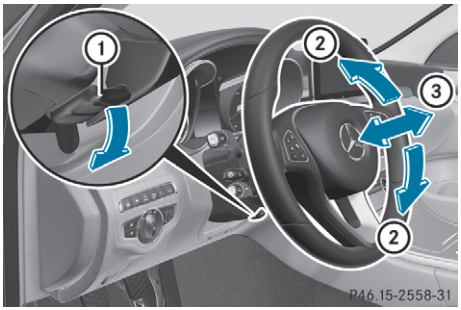

① Release lever
② To adjust the steering wheel height
③ To adjust the steering wheel position (fore-and-aft adjustment)

▶ Push release lever ① down completely. The steering column is unlocked.
▶ Adjust the steering wheel to the desired position.
▶ Push release lever ① up as far as it will go. The steering column is locked.
▶ Check that the steering column is locked. When doing so, try to push the steering wheel up or down or try to move it in the fore-and-aft direction.

Adjusting the steering wheel electrically

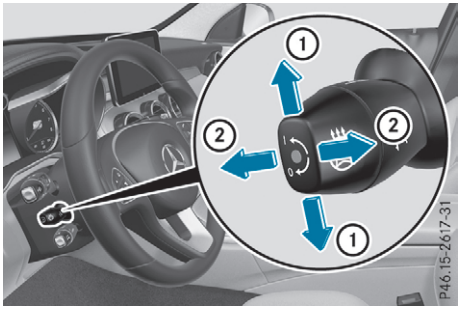

① To adjust the steering wheel height
② To adjust the steering wheel position (fore-and-aft adjustment)

ⓘ Further related subjects:
- EASY-ENTRY/EXIT feature (▷ page 115)
- Storing settings (▷ page 119)

Steering wheel heating

Switching on/off

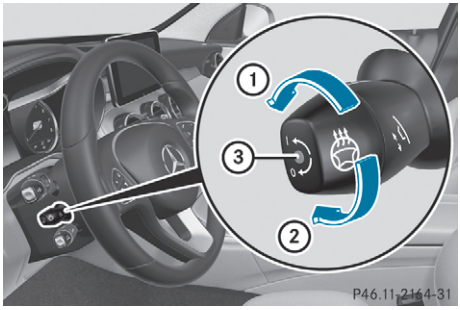

▶ Turn the key to position 2 in the ignition lock (▷ page 153).
▶ **To switch on/off:** turn the lever in the direction of arrow ① or ②.
Indicator lamp ③ lights up or goes out.

If you switch off the ignition, the steering wheel heating is deactivated.

Problems with the steering wheel heating

Problem	Possible causes/consequences and ▶ Solutions
The steering wheel heating has switched itself off prematurely or cannot be switched on.	The on-board voltage is too low because too many electrical consumers are switched on. ▶ Switch off electrical consumers that you do not need, such as the rear window heating or interior lighting.

EASY-ENTRY/EXIT feature

Important safety notes

⚠ WARNING

When the EASY-ENTRY/EXIT feature adjusts the steering wheel, you and other vehicle occupants – particularly children – could become trapped. There is a risk of injury.

While the EASY-ENTRY/EXIT feature is making adjustments, make sure that no one has any body parts in the sweep of the steering wheel.

Move the steering wheel adjustment lever if there is a risk of entrapment by the steering wheel. The adjustment process is stopped.

You can stop the adjustment process by pressing one of the memory function's position buttons. This function is available only on vehicles with the memory function.

⚠ WARNING

If children activate the EASY-ENTRY/EXIT feature, they can become trapped, particularly when unattended. There is a risk of injury.

When leaving the vehicle, always take the key with you and lock the vehicle. Never leave children unattended in the vehicle.

⚠ WARNING

If you drive off while the EASY-ENTRY/EXIT feature is making adjustments, you could lose control of the vehicle. There is a risk of an accident.

Always wait until the adjustment process is complete before driving off.

The EASY-ENTRY/EXIT feature makes getting in and out of your vehicle easier.

You can activate and deactivate the EASY-ENTRY/EXIT feature via the multimedia system (see the Digital Owner's Manual).

Position of the steering wheel when the EASY-ENTRY/EXIT feature is active

The steering wheel tilts upwards if you:

- remove the key from the ignition lock
- **with KEYLESS-GO or KEYLESS-GO start function:** open the driver's door; the voltage supply must be switched on
- **with the key:** open the driver's door; the key must be in position 0 or 1 in the ignition lock (▷ page 153)
- open the driver's door when the ignition is switched off

ⓘ The steering wheel tilts upwards only if the driving position is stored after the seat or steering column has been adjusted (▷ page 119).

The most recent driving position of the steering wheel is stored if:

- the ignition is switched off
- the setting is stored using the memory function (▷ page 119)

ⓘ The steering wheel moves upwards only if it has not already reached the upper steering limiter.

Position of the steering wheel for driving

The steering wheel is moved to the previously set position if:

- the driver's door is closed and you insert the key into the ignition lock
- you close the driver's door when the ignition is switched on
- you press the Start/Stop button once in vehicles with KEYLESS-GO or the KEYLESS-GO start function

ⓘ The steering wheel returns to the last set position only if the driving position is stored after the seat or steering column has been adjusted (▷ page 119).

The most recent driving position of the steering wheel is stored if:

- the ignition is switched off
- the setting is stored using the memory function (▷ page 119)

Crash-responsive EASY-EXIT feature

If the crash-responsive EASY-EXIT feature is triggered in an accident, the steering column will move upwards when the driver's door is opened or the key is removed from the ignition lock. This makes it easier to exit the vehicle and rescue the occupants.

The crash-responsive EASY-EXIT feature is operational only if the EASY-EXIT/ENTRY feature is activated in the multimedia system (see Digital Owner's Manual).

Mirrors

Rear-view mirror

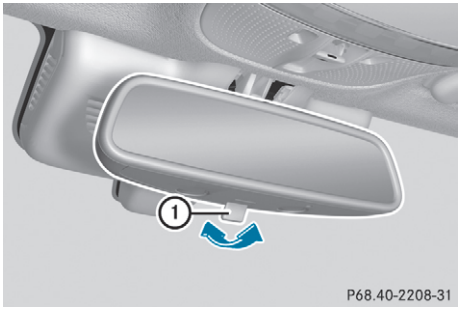

▶ **Anti-dazzle mode:** move anti-dazzle lever ① forwards or backwards.

Exterior mirrors

Important safety notes

⚠ WARNING

You could lose control of the vehicle while driving if you:

- adjust the driver's seat, steering wheel or mirrors
- fasten the seat belt

There is a risk of an accident.

Adjust the driver's seat, head restraint, steering wheel and mirrors and fasten your seat belt before starting the engine.

⚠ WARNING

The exterior mirrors reduce the size of the image. Objects visible in the mirrors are closer than they appear. You could misjudge the distance from road users driving behind you when changing lanes, for instance. There is a risk of an accident.

You should therefore always look over your shoulder to determine the actual distance from road users driving behind you.

Adjusting the exterior mirrors



▶ Turn the key to position 1 or 2 in the ignition lock (▷ page 153).

▶ Exterior mirror on the front-passenger side: press button ②.

Exterior mirror on the driver's side: press button ③.
The indicator lamp lights up in the button that has been pressed.
The indicator lamp goes out again after some time. You can adjust the selected exterior mirror using button ① as long as the indicator lamp is lit.

▶ Press button ① up, down, left or right until you have adjusted the exterior mirror to the correct position. You should have a good overview of traffic conditions.

The convex exterior mirrors provide a larger field of vision.

After the engine has been started, the exterior mirrors are automatically heated if the rear window heating is switched on and the outside temperature is low.

Folding the exterior mirrors in/out electrically



▶ Turn the key to position 1 or 2 in the ignition lock (▷ page 153).
▶ Briefly press button ①.
Both exterior mirrors fold in or out.

ⓘ Make sure that the exterior mirrors are always folded out fully while driving. Otherwise, they could vibrate.

ⓘ If you are driving at speeds of more than 47 km/h, you can no longer fold in the exterior mirrors.

Resetting the exterior mirrors

If the battery has been disconnected or completely discharged, the exterior mirrors must be reset. The exterior mirrors will otherwise not fold in if you have activated the Automatic mirror-folding function on the multimedia system.

▶ Turn the key to position 1 or 2 in the ignition lock (▷ page 153).
▶ Briefly press button ①.

Folding the exterior mirrors in/out automatically

When the Automatic mirror-folding function is activated via the multimedia system (see Digital Owner's Manual):

- the exterior mirrors fold in automatically as soon as you lock the vehicle from the outside
- the exterior mirrors fold out again automatically as soon as you unlock the vehicle

ⓘ If the exterior mirrors have been folded in manually, they do not fold out.

Exterior mirror pushed out of position

If an exterior mirror has been pushed out of position (forwards or backwards), proceed as follows:

▶ **Vehicles without electrically folding exterior mirrors:** manually move the exterior mirrors into the correct position.
▶ **Vehicles with electrically folding exterior mirrors:** press and hold button ① until you hear a click and then the mirror engaging in position (▷ page 117).
The mirror housing is engaged again and you can adjust the exterior mirrors as usual (▷ page 116).

Automatic anti-dazzle mirrors

⚠ **WARNING**

Electrolyte may escape if the glass in an automatic anti-dazzle mirror breaks. The electrolyte is harmful and causes irritation. It must not come into contact with your skin, eyes, respiratory organs or clothing or be swallowed. There is a risk of injury.

If you come into contact with the electrolyte, observe the following:

- Rinse off the electrolyte from your skin immediately with water.
- Immediately rinse the electrolyte out of your eyes thoroughly with clean water.
- If the electrolyte is swallowed, immediately rinse your mouth out thoroughly. Do not induce vomiting.
- If electrolyte comes into contact with your skin or hair or is swallowed, seek medical attention immediately.
- Immediately change out of clothing which has come into contact with electrolyte.
- If an allergic reaction occurs, seek medical attention immediately.

The exterior mirror on the driver's side and the rear-view mirror automatically go into anti-dazzle mode if, at the same time:

- the ignition is switched on
- incident light from headlamps strikes the sensor in the rear-view mirror

The mirrors do not go into anti-dazzle mode if reverse gear is engaged or if the interior lighting is switched on.

Parking position for the front-passenger side exterior mirror

Storing the parking position

You can set the front-passenger-side exterior mirror such that you can see the rear wheel on that side as soon as you engage reverse gear. You can store this position.

Storing using reverse gear

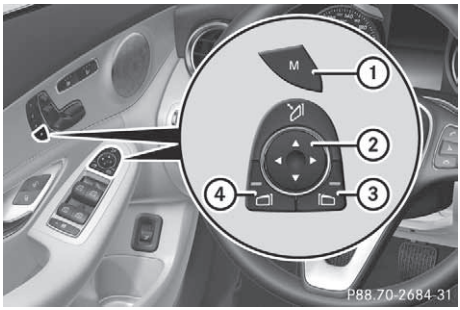

① Memory button **M**
② Button for the exterior mirror setting
③ Button for the exterior mirror on the front-passenger side
④ Button for the exterior mirror on the driver's side

▶ Start the engine.
▶ Press button ③.
▶ Engage reverse gear.
The exterior mirror on the front-passenger side moves to the preset parking position.
▶ Use button ② to adjust the exterior mirror to a position that allows you to see the rear wheel and the kerb.
The parking position is stored.

ⓘ If you shift the gears to another position, the exterior mirror on the front-passenger side returns to the driving position.

Storing using the memory button

You can store the parking position of the front-passenger-side exterior mirror using memory button **M** ①. Reverse gear must not be engaged.

▶ Turn the key to position 2 in the ignition lock (▷ page 153).
▶ Press button ③.
▶ Use button ② to adjust the exterior mirror to a position that allows you to see the rear wheel and the kerb.
▶ Press memory button **M** ① and one of the arrows on button ② within three seconds.
The parking position is stored if the exterior mirror does not move.

- If the exterior mirror moves out of position, repeat the steps.
- After successfully storing, reset the driving position of the exterior mirror.

Calling up a stored parking position

- Turn the key to position 2 in the ignition lock (▷ page 153).
- Select the front-passenger-side exterior mirror using button ③.
- Engage reverse gear.
  The exterior mirror on the front-passenger side moves to the stored parking position.

The exterior mirror on the front-passenger side moves back to its original position:

- as soon as you exceed a speed of 15 km/h
- about ten seconds after you have disengaged reverse gear
- when you press button ④ to select the exterior mirror on the driver's side

Memory function

Important safety notes

⚠ WARNING

If you use the memory function on the driver's side while driving, the adjustments could cause you to lose control of the vehicle. There is a risk of an accident.

Only use the memory function on the driver's side while the vehicle is stationary.

⚠ WARNING

When the memory function adjusts the seat or steering wheel, you and other vehicle occupants – particularly children – could become trapped. There is a risk of injury.

While the memory function is making adjustments, make sure that no one has any body parts in the sweep of the seat or steering wheel. If somebody becomes trapped, immediately release the memory function position button. The adjustment process is stopped.

⚠ WARNING

If children activate the memory function, they could become trapped, especially if they are unattended. There is a risk of injury.

When leaving the vehicle, always take the key with you and lock the vehicle. Never leave children unattended in the vehicle.

The memory function can be used at any time, e.g. even when the key is not in the ignition lock.

Storing settings

Using the memory function, you can store up to three different settings, e.g. for three different people.

The following settings are stored as a single memory preset:

- position of the seat, backrest and head restraint
- driver's side: position of the exterior mirrors on the driver's and front-passenger sides
- position of the head-up display



- Adjust the seat accordingly (▷ page 109).
- On the driver's side, adjust the steering wheel (▷ page 114) and the exterior mirrors (▷ page 116).
- Press memory button **M** and then press one of the memory position buttons **1**, **2** or **3** within three seconds.
  The settings are stored in the selected memory position. A tone sounds when the settings have been completed.

Calling up a stored setting

▶ Press and hold the relevant memory position button **1**, **2** or **3** until the following components are in the stored position:
- Seat
- Steering wheel
- Exterior mirrors

ⓘ If you release the memory position button, the seat, steering wheel and mirror setting functions stop immediately. The head-up display continues to be adjusted.

Exterior lighting

General notes

For reasons of safety, Mercedes-Benz recommends that you drive with lights switched on even during the daytime. In some countries, operation of the headlamps varies due to legal requirements and voluntary recommendations.

Driving abroad

Vehicles with halogen or static LED headlamps

It is not necessary to switch your headlamps to symmetrical dipped beam when driving in countries where vehicles are driven on the opposite side of the road to the country in which the vehicle is registered. Legal requirements are fulfilled without switching the headlamps to symmetrical dipped beam.

Vehicles with Intelligent Light System

It is necessary to switch your headlamps to symmetrical dipped beam before crossing the border into countries where vehicles are driven on the opposite side of the road. This prevents oncoming traffic from being dazzled.

You can switch the headlamps to symmetrical or asymmetrical dipped beam using the "dipped-beam headlamps for driving on the right/left" function via the on-board computer (▷ page 257). This must be switched back to asymmetrical dipped beam upon your return.

Symmetrical lights do not illuminate as large an area of the edge of the carriageway. In this case, "highway mode" and "extended-range fog lamps" are not available.

Setting the exterior lighting

Setting options

Exterior lighting can be set using the:

- light switch (▷ page 121)
- combination switch (▷ page 123)
- headlamp range control for vehicles with halogen headlamps (▷ page 123)
- on-board computer (▷ page 256)

Light switch

Operation

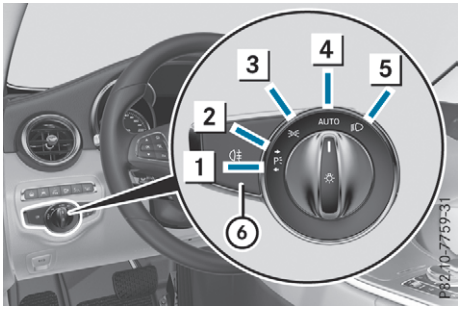

1 Left-hand parking lamps
2 Right-hand parking lamps
3 Side lamps, licence plate and instrument cluster lighting
4 AUTO Automatic headlamp mode, controlled by the light sensor
5 Dipped-beam/main-beam headlamps
6 Rear foglamp

If you hear a warning tone when you leave the vehicle, the lights may still be switched on.

▶ Turn the light switch to position AUTO.

The exterior lighting, except the side/parking lamps, switches off automatically if you:

- remove the key from the ignition lock
- open the driver's door with the key in position 0 in the ignition lock

Automatic headlamp mode

⚠ WARNING

When the light switch is set to AUTO, the dipped-beam headlamps may not be switched on automatically if there is fog, snow or other causes of poor visibility due to the weather conditions such as spray. There is a risk of an accident.

In such situations, turn the light switch to .

The automatic headlamp feature is only an aid. The driver is responsible for the vehicle lighting at all times.

AUTO is the preferred light switch position.

The light setting is automatically selected according to the brightness of the ambient light, but not in the event of poor visibility due to weather conditions such as fog, snow or spray.

- With the key in position 1 in the ignition lock, the side lamps are switched on or off automatically depending on the brightness of the ambient light.
- The daytime driving lights or the side lamps and dipped-beam headlamps are switched on or off automatically while the engine is running depending on the ambient light conditions.

▶ **To switch on the automatic headlamps:** turn the light switch to position AUTO.

The daytime driving lights improve the visibility of your vehicle during the day.

When the side lamps and dipped-beam headlamps are switched on, the green side lamps and dipped-beam headlamps indicator lamps on the instrument cluster light up.

Dipped-beam headlamps

⚠ WARNING

When the light switch is set to AUTO, the dipped-beam headlamps may not be switched on automatically if there is fog, snow or other causes of poor visibility due to the weather conditions such as spray. There is a risk of an accident.

In such situations, turn the light switch to .

When the ignition is switched on and the light switch is in the position, the side lamps and dipped-beam headlamps are switched on even if the light sensor does not sense dark ambient light conditions. This is advantageous when there is fog or rain.

▶ **To switch on the dipped-beam headlamps:** turn the key in the ignition lock to position 2 or start the engine.

▶ Turn the light switch to position . The green indicator lamp on the instrument cluster lights up.

Rear foglamp

The rear foglamp improves the visibility of your vehicle for the traffic behind in the event of heavy fog. You must observe the legal requirements for the country in which you are currently driving when operating the rear fog lamp.

▶ **To switch on the rear fog lamp:** turn the key in the ignition lock to position 2 or start the engine.

▶ Turn the light switch to the or AUTO position.

▶ Press the button. Yellow indicator lamp on the instrument cluster lights up.

Side lamps

! When the battery is discharged heavily, the side lamps or parking lamps are automatically switched off to facilitate an engine start. Always park your vehicle safely and in a well lit area, in accordance with the relevant legal stipulations. Avoid using the side lamps for periods lasting several hours. Where possible, switch on the right or left parking lamp.

▶ **To switch on the side lamp:** turn the light switch to position . The green indicator lamp on the instrument cluster lights up.

Parking lamps

Switching on the parking lamps ensures that the corresponding side of the vehicle is illuminated.

▶ **To switch on the parking lamp:** turn the key to position 0 in the ignition lock or remove the key.

▶ Turn the light switch to position (left-hand side of the vehicle) or (right-hand side of the vehicle).

Adjusting the headlamp range (vehicles with halogen headlamps)

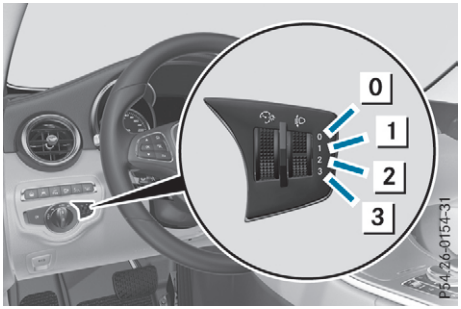

0 Driver's seat and front-passenger seat occupied
1 Driver's seat, front-passenger seat and rear seats occupied
2 Driver's seat, front-passenger seat and rear seats occupied, luggage compartment laden
3 Driver's and front-passenger seat occupied and maximum permissible rear axle load utilised, e.g. when towing a trailer

The headlamp range control allows you to adjust the cone of light from the headlamps to suit the vehicle load.

- ▶ Start the engine.
- ▶ Turn the headlamp range controller to the position that corresponds to the load in your vehicle.

Combination switch

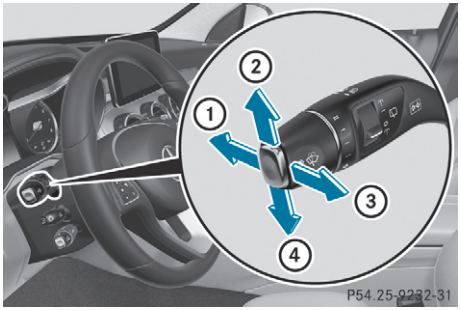

① Main-beam headlamps
② Turn signal lamp, right
③ Headlamp flasher
④ Turn signal lamp, left

- ▶ **To indicate briefly:** push the combination switch briefly to the pressure point in the direction of arrow ② or ④.
  The corresponding turn signal flashes three times.
- ▶ **To indicate:** push the combination switch beyond the pressure point in the direction of arrow ② or ④.
- ▶ **To switch on the main-beam headlamps:** turn the light switch to the ≡D or AUTO position.
- ▶ Push the combination switch beyond the pressure point in the direction of arrow ①.
  In the AUTO position, the main-beam headlamps are switched on only when it is dark and the engine is running.
  The blue ≡D indicator lamp on the instrument cluster lights up when the main-beam headlamps are switched on.
- ▶ **To switch off the main-beam headlamps:** move the combination switch back to its normal position.
  The blue ≡D indicator lamp on the instrument cluster goes out.

Vehicles with Adaptive Highbeam Assist:

If Adaptive Highbeam Assist is activated, it automatically controls activation and deactivation of the main-beam headlamps (▷ page 124).

Vehicles with Adaptive Highbeam Assist Plus:

If Adaptive Highbeam Assist Plus is activated, it automatically controls activation and deactivation of the main-beam headlamps (▷ page 125).

- ▶ **Headlamp flasher:** pull the combination switch in the direction of arrow ③.

Hazard warning lamps

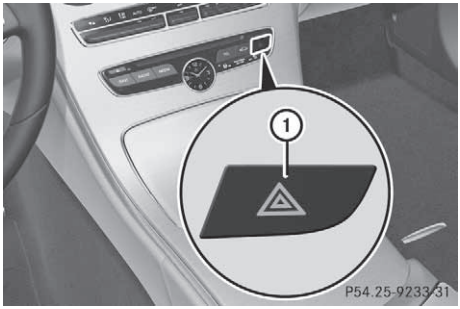

▶ **To switch the hazard warning lamps on or off:** press the ① button.
All the indicator lamps will flash when the hazard warning lamps are switched on. If you now switch on an indicator lamp using the combination switch, only the indicator lamp on the corresponding side of the vehicle will flash.

The hazard warning lamps switch on automatically if:

- an airbag has been triggered
- the vehicle decelerates rapidly from a speed of above 70 km/h and comes to a standstill

The hazard warning lamps switch off automatically if the vehicle reaches a speed of above 10 km/h again after a full brake application.

The hazard warning lamps continue to operate even if the ignition is switched off.

Intelligent Light System

General notes

The Intelligent Light System is a system that adjusts the headlamps automatically to suit the prevailing driving and weather conditions. It offers advanced functions for improved illumination of the road surface, e.g. depending on the vehicle speed or weather conditions. The system includes the active light function, cornering light function, motorway mode and extended-range foglamps. The system is active only when it is dark.

You can activate/deactivate the `Intelligent Light System` function using the on-board computer (▷ page 256).

Active light function

The active light function is a system that moves the headlamps according to the steering movements of the front wheels. In this way, relevant areas remain illuminated while you are driving. This allows you to recognise pedestrians, cyclists and animals sooner.

Active: when the lights are switched on.

Cornering light function

The cornering light function improves the illumination of the road over a wide angle in the direction you are turning, enabling better visibility in tight bends, for example. It can be activated only when the dipped-beam headlamps are switched on.

Active:

- if you are driving at speeds below 40 km/h and switch on the turn signal or turn the steering wheel
- if you are driving at speeds between 40 km/h and 70 km/h and turn the steering wheel

The cornering light function may remain lit for a short time, but is automatically switched off after no more than three minutes.

Motorway mode

Motorway mode increases the range of the beam.

Active: if you are driving at a speed above 110 km/h and do not make any large steering movements for at least 1000 m or if you are driving at a speed above 130 km/h.

Not active: if you drive at speeds below 80 km/h following activation.

Extended range fog lamps

The extended-range fog lamps reduce the glare experienced by the driver and improve the illumination of the edge of the carriageway.

Active: if you are driving at speeds below 70 km/h and you switch on the rear fog lamp.

Not active: if, following activation, you are driving at speeds above 100 km/h or if you switch off the rear fog lamp.

Adaptive Highbeam Assist

General notes

You can use this function to set the headlamps to switch automatically between dipped beam and main beam. The system recognises vehicles with their lights on, either approaching from the opposite direction or travelling in front of your vehicle, and consequently switches the headlamps from main beam to dipped beam.

The system automatically adapts the dipped-beam headlamp range depending on the distance to the other vehicle. Once the system no longer detects any other vehicles, it switches on the main-beam headlamps again.

The system's optical sensor is located behind the windscreen near the overhead control panel.

Important safety notes

⚠ WARNING

Adaptive Highbeam Assist does not recognise road users:

- who have no lights, e.g. pedestrians
- who have poor lighting, e.g. cyclists
- whose lighting is blocked, e.g. by a barrier

On very rare occasions, Adaptive Highbeam Assist may fail to recognise other road users that have lights, or may recognise them too late. In this, or in similar situations, the automatic main-beam headlamps will not be deactivated or will be activated despite the presence of other road users. There is a risk of an accident.

Always carefully observe the traffic conditions and switch off the main-beam headlamps in good time.

Adaptive Highbeam Assist cannot take into account road, weather or traffic conditions. Adaptive Highbeam Assist is only an aid. You are responsible for adjusting the vehicle's lighting to the prevailing light, visibility and traffic conditions.

In particular, the detection of obstacles can be impaired in the case of:

- poor visibility, e.g. due to fog, heavy rain or snow
- dirt on the sensors or obscured sensors

Switching Adaptive Highbeam Assist on/off

- ▶ **To switch on:** turn the light switch to the AUTO position.
- ▶ Press the combination switch forwards beyond the pressure point (▷ page 123). The indicator lamp on the multifunction display lights up when it is dark and the light sensor switches on the dipped-beam headlamps.

  If you are driving at speeds above approximately 25 km/h:

  The headlamp range is set automatically depending on the distance between the vehicle and other road users.

  If you are driving at speeds above approximately 30 km/h and no other road users are detected:

  The main-beam headlamps are switched on automatically. The indicator lamp on the instrument cluster also lights up.

  If you are driving at speeds below 25 km/h or other road users are detected or the roads are adequately lit:

  the main-beam headlamps are switched off automatically The indicator lamp on the instrument cluster goes out. The indicator lamp on the multifunction display remains lit.
- ▶ **To switch off:** move the combination switch back to its normal position or move the light switch to another position.
  The indicator lamp on the instrument cluster goes out.

Adaptive Highbeam Assist Plus

General notes

With Adaptive Highbeam Assist Plus, you can automatically switch between dipped-beam, partial main-beam and main-beam headlamps.

Partial main-beam illumination is a form of illumination whereby the main beam is directed past other road users. Other road users are kept out of the main beam. This prevents glare. If there is a vehicle in front, for example, the main-beam headlamps illuminate the areas to its right and left, and the vehicle in front is illuminated by the dipped-beam headlamps.

The system automatically adapts the dipped-beam headlamp range depending on the distance to the other vehicle. Once the system no longer detects any other vehicles, it switches on the main-beam headlamps again.

If the main-beam or partial main-beam headlamps are causing too much reflection from traffic signs, the lights are automatically dimmed and glare for the driver caused by the reflections is thus avoided.

The system's optical sensor is located behind the windscreen near the overhead control panel.

Important safety notes

⚠ WARNING

Adaptive Highbeam Assist Plus does not recognise road users:

- who have no lights, e.g. pedestrians
- who have poor lighting, e.g. cyclists
- whose lighting is blocked, e.g. by a barrier

In very rare cases, Adaptive Highbeam Assist Plus may not recognise road users who do have lights, or may recognise them too late. In this, or in similar situations, the automatic main-beam headlamps will not be deactivated or will be activated despite the presence of other road users. There is a risk of an accident.

Always carefully observe the traffic conditions and switch off the main-beam headlamps in good time.

Adaptive Highbeam Assist Plus cannot take into account road, weather or traffic conditions. Adaptive Highbeam Assist Plus is only an aid. You are responsible for adjusting the vehicle's lighting to the prevailing light, visibility and traffic conditions.

In particular, the detection of obstacles can be impaired in the case of:

- poor visibility, e.g. due to fog, heavy rain or snow
- dirt on the sensors or obscured sensors

Switching Adaptive Highbeam Assist Plus on/off

▶ **To switch on:** turn the light switch to the AUTO position.

▶ Press the combination switch forwards beyond the pressure point (▷ page 123). The indicator lamp on the multifunction display lights up when it is dark and the light sensor switches on the dipped-beam headlamps.

If you are driving at speeds above approximately 25 km/h:

The headlamp range is set automatically depending on the distance between the vehicle and other road users.

If you are driving at speeds above approximately 30 km/h and no other road users are detected:

The main-beam headlamps are switched on automatically. The indicator lamp on the instrument cluster also lights up.

If you are driving at speeds above approximately 45 km/h and other road users have been detected:

Partial main beam is selected automatically. The indicator lamp on the instrument cluster also lights up.

If you are driving at speeds below approximately 40 km/h:

the partial main-beam headlamps are switched off automatically If no other road users are detected, the main-beam headlamps are switched on.

If you are driving at speeds below approximately 25 km/h or the roads are adequately illuminated:

the main-beam headlamps are switched off automatically The indicator lamp on the instrument cluster goes out. The indicator lamp on the multifunction display remains lit.

▶ **To switch off:** move the combination switch back to its normal position or move the light switch to another position.
The indicator lamp on the multifunction display goes out.

Headlamps misted up on the inside

Certain climatic and physical conditions may cause moisture to form in the headlamp. This moisture does not affect the functionality of the headlamp.

Interior lighting

Overview of interior lighting

Front overhead control panel



① Left-hand front reading lamp
② Automatic interior lighting control
③ Front interior lighting
④ Rear interior lighting
⑤ Right-hand front reading lamp

Control panel in the grab handle (rear compartment)

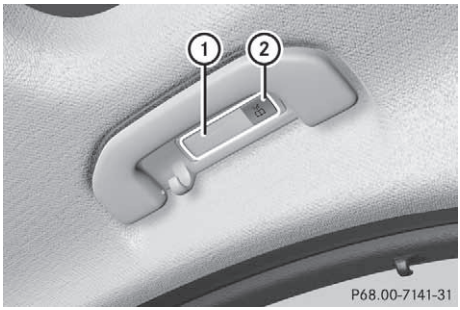

① Reading lamp
② Switches the reading lamp on/off

Interior lighting control

General notes

In order to prevent the vehicle's battery from discharging, the interior lighting functions are automatically deactivated after some time except for when the key is in position 2 in the ignition lock.

The colour and brightness of the ambient lighting are set via the multimedia system (see Digital Owner's Manual).

Automatic interior lighting control

▶ **To switch on or off:** press the button. When the automatic interior lighting control is switched on, the button is flush with the overhead control panel.

The interior lighting automatically switches on if you:

- unlock the vehicle
- open a door
- remove the key from the ignition lock

The interior lighting is switched on for a certain length of time when the key is removed from the ignition lock. This delayed switch-off can be adjusted via the multimedia system (see Digital Owner's Manual).

Replacing bulbs

Important safety notes

⚠ WARNING

Bulbs, lamps and plug connectors can become very hot during use. When replacing a bulb, you could burn yourself on these components. There is a risk of injury.

Allow these components to cool down before replacing the bulb.

Do not use a bulb if it has been dropped or if its glass has been scratched.

The bulb may explode if:

- you touch it
- it is hot
- you drop it
- you scratch it

Use bulbs only in closed lamps that have been designed for this purpose. Fit only spare bulbs of the same type and the specified voltage.

Marks on the glass reduce the service life of the bulbs. Do not touch the glass with your bare hands. If necessary, clean the glass when cold with alcohol or spirit and rub it off with a lint-free cloth.

Protect bulbs from moisture during operation. Do not allow bulbs to come into contact with liquids.

Replace only the bulbs listed (▷ page 128). Have the bulbs that you cannot change yourself replaced at a qualified specialist workshop.

If you require assistance replacing bulbs, consult a qualified specialist workshop.

If the new bulb still does not light up, consult a qualified specialist workshop.

Headlamps and lights are an important aspect of vehicle safety. You must therefore make sure that these function correctly at all times. Have the headlamp setting checked regularly.

Vehicles with LED headlamps: the front and rear lamp clusters of your vehicle are equipped with LED bulbs, except the reversing lamp. Do not replace the bulbs yourself. Contact a qualified specialist workshop with the necessary specialist knowledge and tools to carry out the work required.

Overview of bulb types

You can replace the following bulbs. The details for the bulb type can be found in the legend.

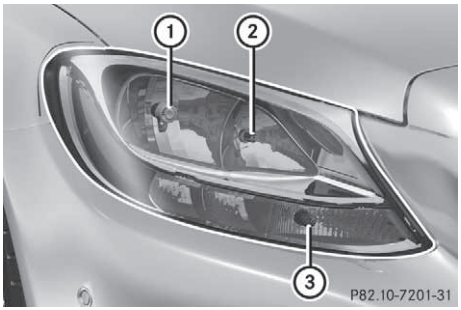

Halogen headlamps

① Dipped-beam headlamp: H7 55 W
② Main-beam headlamp: H7 55 W
③ Turn signal lamp: PWY 24 W

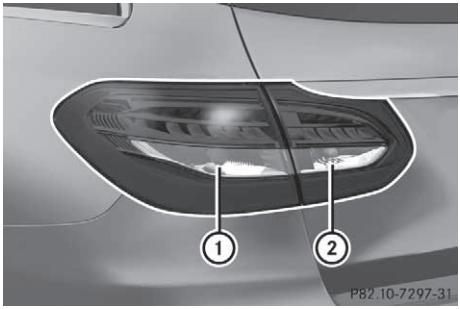

Rear lamp cluster - vehicles with halogen headlamps

① Turn signal lamp: PY 21 W
② Reversing lamp: W 16 W

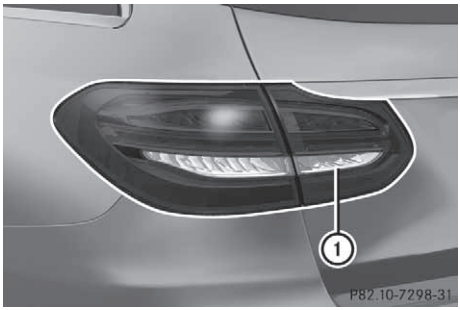

Rear lamp cluster - vehicles with LED headlamps

① Reversing lamp: W 16 W

Replacing front bulbs (vehicles with halogen headlamps)

Dipped-beam headlamps

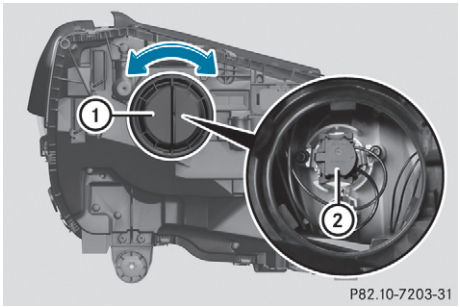

▶ Switch off the lights.
▶ Open the bonnet.

- ▶ Turn housing cover ① anti-clockwise and remove it.
- ▶ Turn bulb holder ② anti-clockwise and pull out.
- ▶ Pull defective bulb out of bulb holder ②.
- ▶ Insert new bulb into bulb holder ②.
- ▶ Insert bulb holder ② and turn it clockwise.
- ▶ Press on housing cover ① and turn it clockwise.

Main-beam headlamps

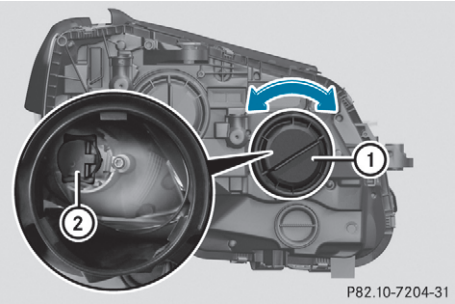

- ▶ Switch off the lights.
- ▶ Open the bonnet.
- ▶ Turn housing cover ① anti-clockwise and remove it.
- ▶ Turn bulb holder ② anti-clockwise and pull out.
- ▶ Pull defective bulb out of bulb holder ②.
- ▶ Insert new bulb into bulb holder ②.
- ▶ Insert bulb holder ② and turn it clockwise.
- ▶ Press on housing cover ① and turn it clockwise.

Turn signals

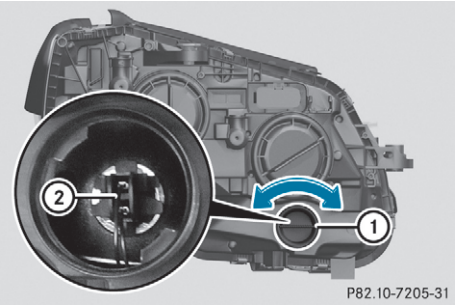

- ▶ Remove the cover in the front wheel arch (▷ page 129).
- ▶ Turn housing cover ① anti-clockwise and remove it.
- ▶ Turn bulb holder ② anti-clockwise, unlock and pull out.
- ▶ Pull defective bulb out of bulb holder ②.
- ▶ Insert new bulb into bulb holder ②.
- ▶ Insert bulb holder ② and turn it clockwise.
- ▶ Press on housing cover ①, turn it to the right and lock it.
- ▶ Replace the cover in the front wheel arch (▷ page 129).

Fitting/removing the cover on the front wheel arch

You must remove the cover in the front wheel arch before you can change the front turn signal lamp.

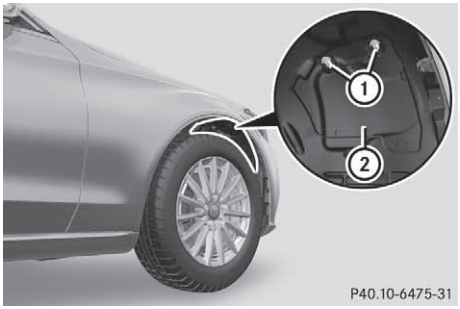

- ▶ **To remove:** switch off the lights.
- ▶ Turn the front wheels inwards.
- ▶ Use a suitable object to turn rotary knob ① 180° outwards until it stops.
  Cover ② is released.
- ▶ Lift cover ② off.
- ▶ **To fit:** insert cover ② into the left, right and two lower catches.
- ▶ Use a suitable object to turn rotary knob ① 180° inwards until it stops.
  Cover ② is locked.

Replacing rear bulbs

Opening and closing the side trim panels

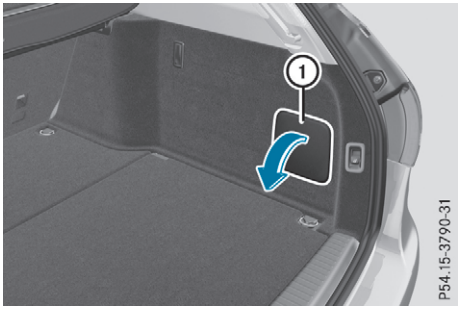

Example: right-hand side trim panel

You must open the side trim panel in the luggage compartment before you can replace the bulbs in the tail lamps.

- ▶ **To open:** release right or left side trim panel ① at the top and fold it down in the direction of the arrow.
- ▶ **To close:** reinsert side trim panel ①.

Rear lamp cluster

Replacing the bulbs in the turn signal lamps

- ▶ Switch off the lights.
- ▶ Open the tailgate.
- ▶ Open the side trim panel (▷ page 130).

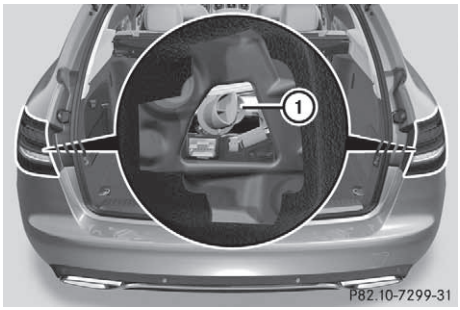

- ▶ Turn bulb holder ① anti-clockwise and pull it out.
- ▶ Gently turn the defective bulb anti-clockwise and pull it out of bulb holder ①.
- ▶ Insert the new bulb into bulb holder ① and turn it clockwise.
- ▶ Insert bulb holder ① and turn it clockwise.
- ▶ Close the side trim panel (▷ page 130).

Replacing the bulbs in the reversing lamp

Due to their location, have the bulbs in the reversing lamp in the tailgate replaced at a qualified specialist workshop.

- ▶ Switch off the lights.
- ▶ Open the tailgate.

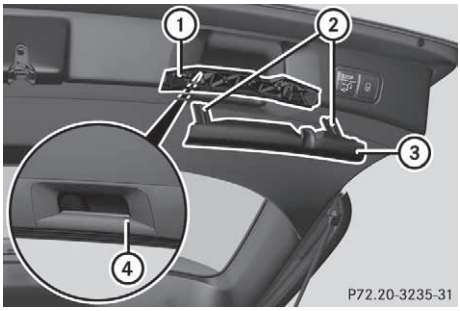

Example: right-hand-side handle

- ▶ In recess ④ on the inside of the closing handle, prise out and remove the upper section of handle ③ with a flat, smooth object, e.g. a screwdriver.
- ▶ Pull the lower section of handle ① with a strong tug to remove it from the trim and then place it to one side.

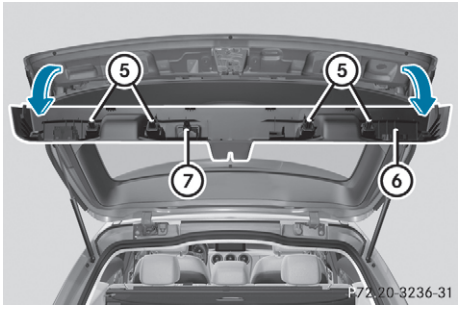

- ▶ Reach under the right-hand side of trim ⑥ and lightly tug along the entire length of the trim in order to unclip it.
- ▶ Pull out plug connector ⑦ of the surround lighting by releasing both latches.

- ▶ Vehicles with EASY-PACK tailgate: pull out the plug connector for the switch at the top right of the trim.
- ▶ Vehicles with electric fold-out trailer tow hitch: unlock and pull out the plug connector for the switch at the top left of the trim.
- ▶ Place trim ⑥ to one side.

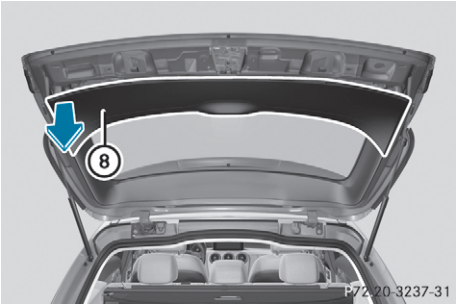

- ▶ On the appropriate side, unclip the remaining part of trim ⑧ with a strong tug until bulb holder ⑨ is accessible.

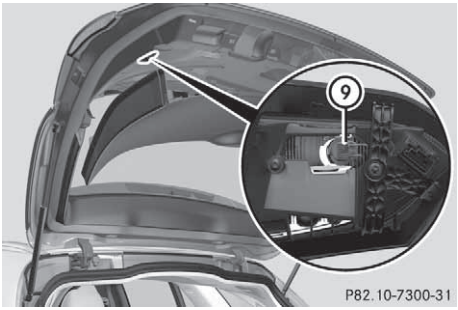

- ▶ Pull the defective bulb out of bulb holder ⑨.
- ▶ Insert the new bulb into bulb holder ⑨.
- ▶ Position trim ⑧ and engage it in place by tapping it with your hand.
- ▶ Check that all of the metal clips are inserted in the parts that were placed to one side: 2 clips ② in the upper part of handle ③ and 4 clips ⑤ in trim ⑥.
- ▶ If not, remove the missing metal clips from the panel apertures in the tailgate and insert them in the corresponding positions.
- ▶ Grasp trim ⑥ and connect plug connector ⑦ to the surround lighting.

ⓘ The surround lighting only illuminates when the tailgate has been closed and reopened.

- ▶ Vehicles with EASY-PACK tailgate: insert the plug connector for the switch at the top right of the trim.
- ▶ Vehicles with electric fold-out trailer tow hitch: insert the plug connector for the switch at the top left of the trim.
- ▶ Position trim ⑥ and engage it in place by tapping it with your hand, starting from the outer edge.
- ▶ Clip in the lower section of handle ① again.
- ▶ Insert and engage the upper section of handle ③ into lower section ①.

Windscreen wipers

Switching the windscreen wipers on/off

❗ Do not operate the windscreen wipers when the windscreen is dry, as this could damage the wiper blades. Moreover, dust that has collected on the windscreen can scratch the glass if wiping takes place when the windscreen is dry.

If it is necessary to switch on the windscreen wipers in dry weather conditions, always operate them using washer fluid.

❗ If the windscreen wipers leave smears on the windscreen after the vehicle has been washed in an automatic car wash, this may be due to wax or other residue. Clean the windscreen with washer fluid after an automatic car wash.

❗ Intermittent wiping with rain sensor: due to optical influences and the windscreen becoming dirty in dry weather conditions, the windscreen wipers may be activated inadvertently. This could damage the windscreen wiper blades or scratch the windscreen.

For this reason, you should always switch off the windscreen wipers in dry weather.

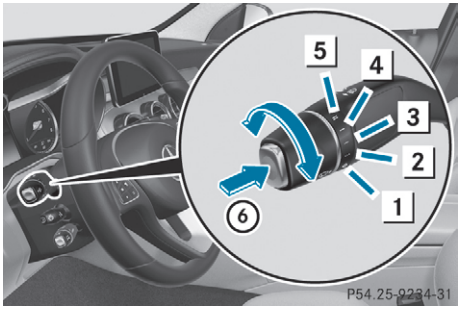

1 0 Windscreen wipers off
2 ••• Intermittent wiping, normal
3 •••• Intermittent wiping, frequent
4 — Continuous wipe, slow
5 = Continuous wipe, fast
⑥ Single wipe
Wipe with washer fluid

▶ Turn the key to position 1 or 2 in the ignition lock (▷ page 153).
▶ Turn the combination switch to the corresponding position.

Vehicles with a rain sensor: in the •••• or ••• position, the appropriate wiping frequency is automatically set according to the intensity of the rain. In the •••• position, the rain sensor is more sensitive than in the ••• position, causing the windscreen wiper to wipe more frequently.

If the wiper blades are worn, the windscreen will no longer be wiped properly. This could prevent you from observing the traffic conditions.

Switching the rear window wiper on/off

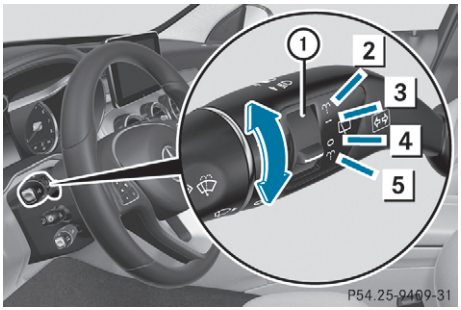

① Switch
2 Wipes with washer fluid
3 I Switches on intermittent wiping
4 0 Switches off intermittent wiping
5 Wipes with washer fluid

▶ Turn the key to position 1 or 2 in the ignition lock (▷ page 153).
▶ Turn switch ① on the combination switch to the corresponding position.
When the rear window wiper is switched on, the symbol appears on the instrument cluster.

Replacing the wiper blades

Important safety notes

⚠ WARNING

If the windscreen wipers begin to move while you are changing the wiper blades, you can be trapped by the wiper arm. There is a risk of injury.

Always switch off the windscreen wipers and ignition before changing the wiper blades.

! Never open the bonnet/tailgate if a wiper arm is folded away from the windscreen/rear window.

Never fold a windscreen wiper arm without a wiper blade back onto the windscreen/rear window.

Hold the windscreen wiper arm firmly when you change the wiper blade. If you release the wiper arm without a wiper blade and it falls onto the windscreen/rear window, the windscreen/rear window may be damaged by the force of the impact.

Mercedes-Benz recommends that you have the wiper blades changed at a qualified specialist workshop.

! To avoid damaging the windscreen wiper blades, make sure that you touch only the wiper arm of the windscreen wiper.

Replacing the windscreen wiper blades

Moving the wiper blades to a vertical position

On vehicles without KEYLESS-GO or KEYLESS-GO start function:

- ▶ Turn the key to position 1 or 2 in the ignition lock (▷ page 153).
- ▶ Set the windscreen wipers to the — position on the combination switch.
- ▶ When the wiper arms are vertical to the bonnet, turn the key to position 0 in the ignition lock and remove the key.
- ▶ Fold the wiper arm away from the windscreen.

On vehicles with KEYLESS-GO or KEYLESS-GO start function:

- ▶ Switch off the engine.
- ▶ Remove your foot from the brake pedal.
- ▶ Set the windscreen wipers to the — position on the combination switch.
- ▶ Press the Start/Stop button repeatedly until the windscreen wipers start.
- ▶ When the wiper arms are vertical to the bonnet, press the Start/Stop button.
- ▶ Fold the wiper arm away from the windscreen.

Removing the wiper blades

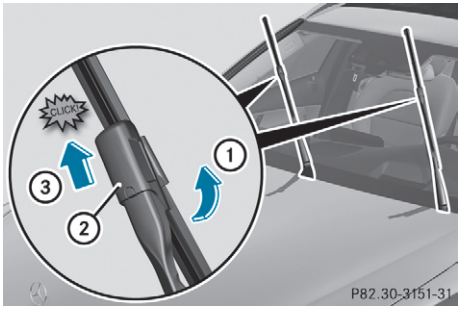

- ▶ Hold on to the wiper arm with one hand. With the other hand, turn the wiper blade in the direction of arrow ① away from the wiper arm as far as it will go.
- ▶ Slide the catch ② in the direction of arrow ③ until it engages in the removal position with a noticeable click.

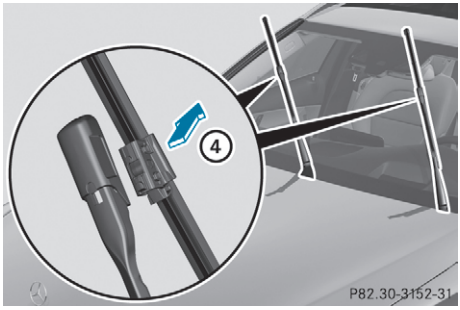

- ▶ Remove the wiper blade in the direction of arrow ④ away from the wiper arm.

Fitting the wiper blades

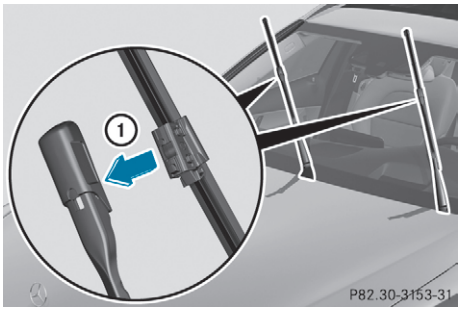

- ▶ Insert the new wiper blade into the wiper arm in the direction of arrow ①.

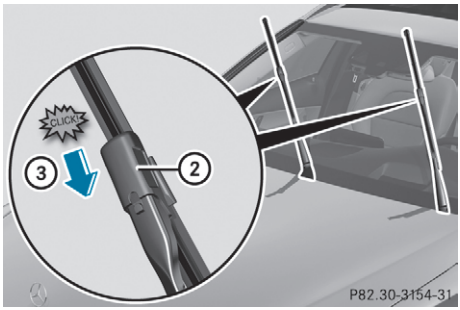

- ▶ Slide the catch ② in the direction of arrow ③ until it engages in the locking position with a noticeable click.
- ▶ Make sure that the wiper blade sits correctly.
- ▶ Fold the wiper arm back onto the windscreen.

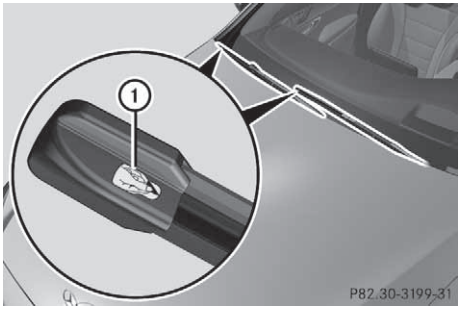

▶ Remove the protective film ① from the service indicator on the tip of the wiper blade.

When the colour of the service indicator changes from black to yellow, the wiper blades should be replaced.

ⓘ The duration of the colour change varies depending on the usage conditions.

Replacing the rear window wiper blade

Removing a wiper blade

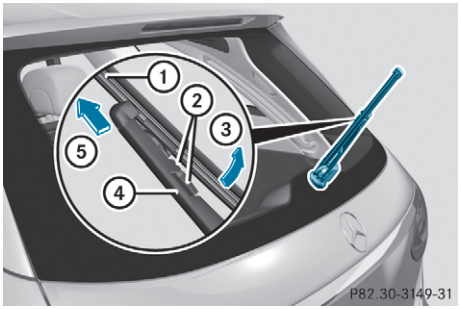

▶ Switch off the engine.

▶ Remove the key from the ignition lock.

or, on vehicles with KEYLESS-GO or KEYLESS-GO start function:

▶ Open the driver's door.
The vehicle electronics are now in position 0. This is the same as the key having been removed.

▶ Fold wiper arm ④ away from the rear window.

▶ Press both release clips ②.

▶ Fold wiper blade ① in the direction of arrow ③ away from wiper arm ④.

▶ Remove wiper blade ① in the direction of arrow ⑤.

Fitting a wiper blade

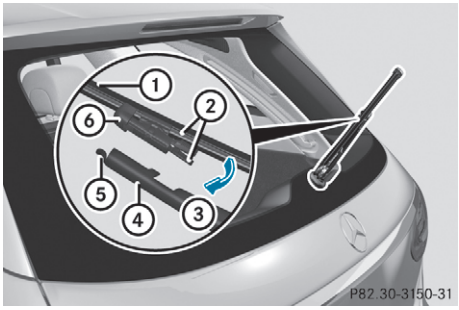

▶ Position new wiper blade ① with recess ⑥ on lug ⑤.

▶ Fold wiper blade ① in the direction of arrow ③ onto the wiper arm until retaining clips ② engage in bracket ④.

▶ Make sure that wiper blade ① is sitting correctly.

▶ Fold the wiper arm back onto the rear window.

Problems with the windscreen wipers

Problem	Possible causes/consequences and ▶ Solutions
The windscreen wipers are jammed.	Leaves or snow, for example, are obstructing windscreen wiper movement. The wiper motor has been deactivated. ▶ Switch off the engine. ▶ Remove the key from the ignition lock. or, on vehicles with KEYLESS-GO or KEYLESS-GO start function: ▶ Open the driver's door. The vehicle electronics are now in setting 0. This is the same as “key removed”. ▶ Remove the cause of the obstruction. ▶ Switch the windscreen wipers back on.
The windscreen wipers fail completely.	The windscreen wiper drive is malfunctioning. ▶ Select another wiper speed on the combination switch. ▶ Have the windscreen wipers checked at a qualified specialist workshop.
The windscreen washer fluid from the spray nozzles no longer hits the centre of the windscreen.	The spray nozzles are misaligned. ▶ Have the spray nozzles adjusted at a qualified specialist workshop.

Overview of climate control systems

General notes

THERMATIC automatic climate control is available with one or two climate control zones. With dual-zone automatic climate control, the temperature can be regulated separately on the driver's side and front-passenger side.

Observe the settings recommended on the following pages. Otherwise, the windows could mist up.

To prevent the windows from misting up:

- switch off climate control only briefly
- activate air-recirculation mode only briefly
- activate the "Cooling with dehumidification" function
- activate the "Windscreen demisting" function briefly, if required

Climate control regulates the temperature and air humidity in the vehicle interior. The interior filter cleans the air, thus improving the interior climate.

The "Cooling with dehumidification" function is available only when the engine is running. Optimum climate control is achieved only with the side windows and roof closed.

The "Residual heat" function can only be switched on or off if the ignition is switched off (▷ page 145).

The integrated filter filters out most particles of dust and soot and completely filters out pollen. It also reduces gaseous pollutants and odours. A clogged filter reduces the amount of air supplied to the vehicle interior. For this reason, you should always observe the interval for replacing the filter, which is specified in the Service Booklet. As this depends on environmental conditions, e.g. heavy air pollution, the interval may be shorter than stated in the Service Booklet.

ⓘ Ventilate the vehicle for a brief period during warm weather, e.g. using the convenience opening feature (▷ page 100). This will speed up the cooling process and the desired interior temperature will be reached more quickly.

ⓘ It is possible that the blower may be activated automatically 60 minutes after the key has been removed depending on various factors, e.g. the outside temperature. The vehicle is then ventilated for 30 minutes to dry the automatic climate control.

ⓘ **Hybrid vehicles:** be sure to observe the information in the supplement. Otherwise, you may fail to recognise dangers.

Control panel for THERMATIC automatic climate control

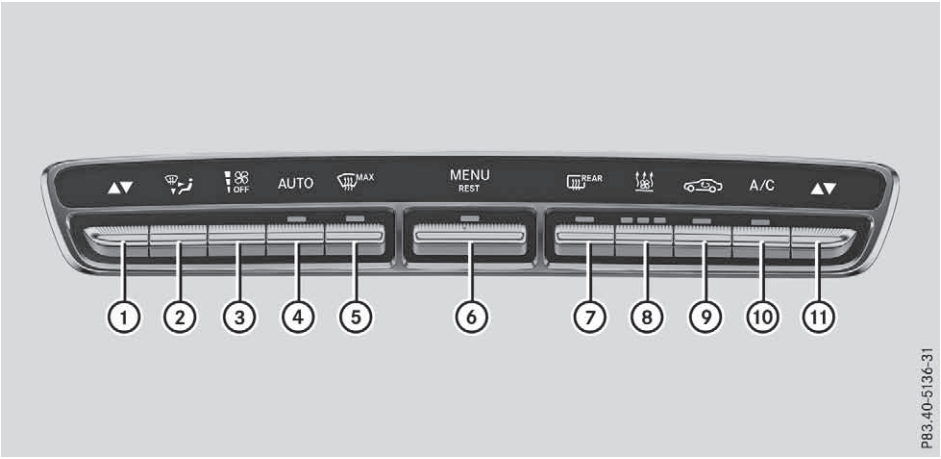

Vehicles with auxiliary heating (example)

① Sets the temperature, left (▷ page 141)
② Sets the air distribution (▷ page 141)
③ Sets the airflow (▷ page 142)
Switches climate control off (▷ page 139)
④ Sets climate control to automatic mode (▷ page 140)
⑤ Demists the windscreen (▷ page 142)
⑥ Calls up the climate control menu of the multimedia system (▷ page 311)
Vehicles with auxiliary heating: to switch MENU REST residual heat on/off (▷ page 145)
⑦ Switches the rear window heating on/off (▷ page 143)
⑧ Vehicles with auxiliary heating: to switch the auxiliary heating on/off (▷ page 146)
Vehicles without auxiliary heating: to switch the SYNC synchronisation on/off (▷ page 142)
⑨ Activates/deactivates air-recirculation mode manually (▷ page 144)
⑩ Activates/deactivates cooling with dehumidification (▷ page 140)
⑪ Sets the temperature, right (▷ page 141)

Control panel for THERMOTRONIC automatic climate control (three-zone)

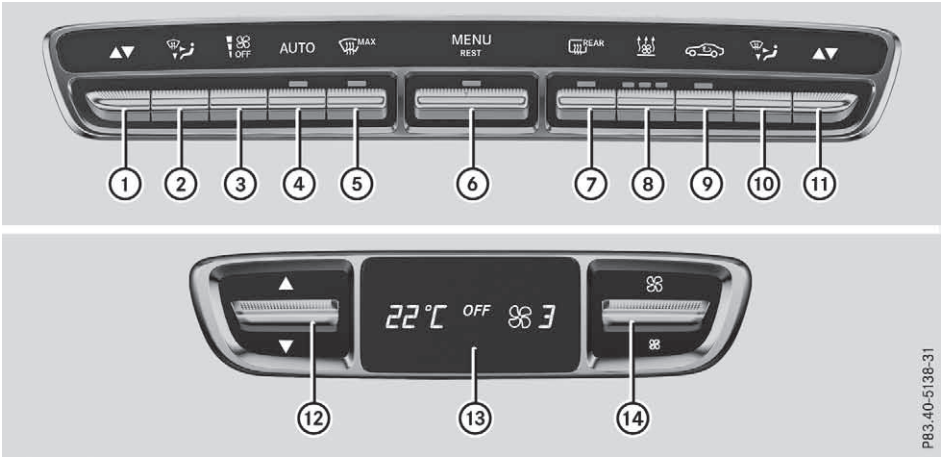

Vehicles with auxiliary heating (example)

Front control panel

① Setting the temperature, left (▷ page 141)
② Setting the air distribution, left (▷ page 141)
③ Setting the airflow (▷ page 142)
Switching climate control off (▷ page 139)
④ Setting climate control to automatic mode (▷ page 140)
⑤ Demisting the windscreen (▷ page 142)
⑥ Calling up the climate control menu of the multimedia system (▷ page 311)
Switching residual heat on/off (▷ page 145)
⑦ Switching the rear window heating on/off (▷ page 143)
⑧ Vehicles with auxiliary heating: switches the auxiliary heating on/off (▷ page 146)
Vehicles without auxiliary heating: activates/deactivates A/C cooling with dehumidification (▷ page 140)
⑨ Activating/deactivating air-recirculation mode manually (▷ page 144)
⑩ Setting the air distribution, right (▷ page 141)
⑪ Setting the temperature, right (▷ page 141)

Rear control panel

⑫ Setting the temperature (▷ page 141)
⑬ Display
⑭ Setting the airflow (▷ page 142)

Notes on using automatic climate control

Optimum use of automatic climate control

The following contains notes and recommendations on how best to use THERMATIC automatic climate control or THERMOTRONIC.

▶ Activate climate control using rocker switch AUTO. The indicator lamp above rocker switch AUTO lights up. The "Cooling with dehumidification" function is activated in automatic mode.
▶ Set the temperature to 22 °C.

ⓘ Use the "Windscreen demisting" function only briefly until the windscreen is clear again.

ⓘ Use the "Air-recirculation mode" function only briefly, e.g. if there are unpleasant outside odours or when in a tunnel. The windows could otherwise mist up as no fresh air is drawn into the vehicle in air-recirculation mode.

Vehicles with THERMATIC automatic climate control with auxiliary heating or THERMOTRONIC automatic climate control: use the "Residual heat" function if you want to heat or ventilate the vehicle interior when the ignition is switched off. The "Residual heat" function can be switched on or off only with the ignition switched off. The "Residual heat" function is switched off when the ignition is switched on.

DYNAMIC SELECT switch (except Mercedes-AMG C 63 / C 63 S)

You can choose between various drive programs with the DYNAMIC SELECT switch:

- Manual transmission (▷ page 162)
- Automatic transmission (▷ page 162)

If you have selected drive program **E**:

- during heating, the electrical heater booster is deactivated and heat output is reduced as a result
- the rear window heating running time is reduced

If you have selected drive program **C**, **S** or **S+**, the current climate settings are maintained.

ECO start/stop function

During automatic engine stop, the climate control operates only at a reduced capacity. If you require the full climate control output, you can switch off the ECO start/stop function by pressing the ECO button (▷ page 159).

Operating the climate control systems

Switching the climate control on/off

General notes

When climate control is switched off, the air supply and air circulation are also switched off. The windows could mist up. Therefore, switch off climate control only briefly.

Switch on climate control preferably using rocker switch AUTO (▷ page 140).

Switching on/off

- ▶ Turn the key to position 2 in the ignition lock (▷ page 153).
- ▶ **To switch on:** set the airflow to level **1** or higher using rocker switch.
- ▶ **To switch off:** set the airflow to level **0** using rocker switch.

ⓘ THERMOTRONIC automatic climate control: when climate control is switched off, "OFF" appears on the rear-compartment display.

Activating/deactivating cooling with dehumidification

General notes

If you deactivate the "Cooling with dehumidification" function, the air inside the vehicle will not be cooled during warm weather. The air inside the vehicle will also not be dehumidified. The windows can mist up more quickly. Therefore, deactivate the "Cooling with dehumidification" function only briefly.

The "Cooling with dehumidification" function is available when the engine is running. The air inside the vehicle is cooled and dehumidified according to the temperature selected.

Condensation may drip from the underside of the vehicle when cooling mode is active. This is normal and not a sign that there is a malfunction.

Switching on/off

THERMOTRONIC automatic climate control without auxiliary heating and THERMATIC automatic climate control

▶ Press rocker switch A/C up or down.
The indicator lamp above the rocker switch lights up or goes out.

THERMOTRONIC automatic climate control with auxiliary heating

You can activate or deactivate the "Cooling with dehumidification" function via the multimedia system (▷ page 312).

Problems with the "Cooling with dehumidification" function

Problem	Possible causes/consequences and ▶ Solutions
THERMATIC or THERMOTRONIC without auxiliary heating: the indicator lamp above rocker switch A/C remains off. The "Cooling with dehumidification" function can no longer be activated via the multimedia system (▷ page 312).	The "Cooling with dehumidification" function has been deactivated due to a malfunction. ▶ Consult a qualified specialist workshop.
THERMOTRONIC automatic climate control with auxiliary heating: the "Cooling with dehumidification" function can no longer be activated via the multimedia system (▷ page 312).	The "Cooling with dehumidification" function has been deactivated due to a malfunction. ▶ Consult a qualified specialist workshop.

Setting climate control to automatic mode

General notes

In automatic mode, the set temperature is maintained automatically at a constant level. The system automatically regulates the temperature of the dispensed air, the airflow and the air distribution.

During automatic controlling, the "Cooling with dehumidification" function is activated.

Automatic control

▶ Turn the key to position 2 in the ignition lock (▷ page 153).

▶ **To activate:** press rocker switch AUTO up or down.
The indicator lamp above rocker switch AUTO lights up.

▶ Set the desired temperature using rocker switch ▼▲ on the front control panel.

▶ **To switch to manual operation:** press rocker switch AUTO OFF up or down.

or

▶ Press rocker switch up or down.
The indicator lamp above rocker switch AUTO goes out.

In automatic mode, if you adjust the airflow or air distribution manually, the indicator lamp above rocker switch AUTO goes out. The function that has not been changed manually, however, continues to be controlled automatically. When the manually set function switches back to automatic mode, the indicator lamp above rocker switch AUTO lights up again.

Setting the climate mode

This function is available only with THERMOTRONIC automatic climate control.

In automatic mode, you can select the following airflow settings for the driver's and front-passenger areas:

FOCUS	high airflow, slightly cooler setting
MEDIUM	medium airflow, standard setting
DIFFUSE	low airflow, slightly warmer and draught-free setting

- **To set:** set the climate mode via the multimedia system (▷ page 312).

Setting the temperature

THERMATIC automatic climate control

THERMATIC automatic climate control (dual-zone): different temperatures can be set for the driver's and front-passenger sides.

- Turn the key to position 2 in the ignition lock (▷ page 153).
- **To increase or reduce:** press rocker switch ▼▲ up or down.

  Change the temperature setting only in small increments. Start at 22 °C.

THERMOTRONIC automatic climate control

General notes

Different temperatures can be set for the driver's and front-passenger sides as well as for the rear compartment.

Setting the temperature in the front compartment using the front control panel

- Turn the key to position 2 in the ignition lock (▷ page 153).
- **To increase or reduce:** press rocker switch ▼▲ up or down.

  Change the temperature setting only in small increments. Start at 22 °C.

Setting the temperature in the rear compartment using the rear control panel

- Turn the key to position 2 in the ignition lock (▷ page 153).
- **To increase or reduce:** press rocker switch ▼▲ up or down on the rear control panel (▷ page 138).

  Change the temperature setting only in small increments. Start at 22 °C.
  The set temperature appears on the rear-compartment display.

Setting the air distribution

Air distribution settings

	Directs the airflow through the demister vents
	Directs the airflow through the centre and side air vents
	Directs the airflow through the footwell air vents
	Directs the airflow through the centre and side air vents as well as the footwell air vents
	Directs the airflow through the footwell and demister vents
	Directs the airflow through the demister vents, the centre and side air vents as well as the footwell air vents
	Directs the airflow through the centre and side air vents as well as the demister vents
AUTO	Sets the air distribution to automatic

Settings

THERMOTRONIC automatic climate control: you can set the air distribution separately for the driver's and front-passenger sides.

- ▶ Turn the key to position 2 (▷ page 153).
- ▶ Press rocker switch up or down.
  The various air distribution settings appear on the multimedia system.

Setting the airflow

Setting the front-compartment airflow

- ▶ Turn the key to position 2 in the ignition lock (▷ page 153).
- ▶ **To increase or reduce:** press rocker switch up or down.

Setting the rear compartment airflow using the rear control panel

It is only possible to set the airflow using the rear control panel on vehicles with THERMOTRONIC automatic climate control.

You can set the airflow separately for the front and rear compartment.

- ▶ Turn the key to position 2 in the ignition lock (▷ page 153).
- ▶ **To increase or reduce:** press rocker switch or up or down on the rear control panel.
  The selected airflow level appears on the rear display.

Activating/deactivating the synchronisation function

General notes

The "Synchronisation" function is available only with THERMATIC automatic climate control (dual-zone) and THERMOTRONIC automatic climate control.

Climate control can be set centrally using the synchronisation function. The temperature setting is adopted for the front-passenger side. For THERMOTRONIC automatic climate control, the temperature setting is adopted for the front-passenger side and rear compartment.

Switching on/off

THERMATIC automatic climate control (dual-zone) without auxiliary heating

- ▶ Press rocker switch SYNC up or down.
  The indicator lamp above rocker switch SYNC lights up or goes out.

The synchronisation function is deactivated if the settings for the front-passenger side are changed.

THERMATIC automatic climate control (dual-zone) with auxiliary heating and THERMOTRONIC automatic climate control

- ▶ Activate or deactivate the "Synchronisation" function via the multimedia system (▷ page 313).

The synchronisation function is deactivated if:

- the settings for the front-passenger side are changed
- THERMOTRONIC automatic climate control only: the settings for the rear compartment are changed

Demisting the windscreen

General notes

You can use this function to defrost the windscreen or to demist the inside of the windscreen and the front side windows.

Switch off the "Windscreen demisting" function as soon as the windscreen is clear again.

Switching the "Windscreen demisting" function on or off

- ▶ Turn the key to position 2 in the ignition lock (▷ page 153).
- ▶ **To switch on:** press rocker switch MAX on the front control unit up or down.
  The indicator lamp above rocker switch MAX lights up. The current climate control settings are deactivated.
  The climate control system switches to the following functions:
  - high airflow
  - high temperature

- air distribution to the windscreen and front side windows
- air-recirculation mode off

ⓘ If necessary, the "Cooling with dehumidification" function is activated. In this case, the indicator lamp above rocker switch A/C remains switched off.

▶ **To switch off:** press rocker switch MAX up or down.
The indicator lamp above rocker switch MAX goes out. The previous settings are reactivated. Air-recirculation mode remains deactivated.

Demisting the windows

Windows misted up on the inside

▶ Activate the "Cooling with air dehumidification" function with the A/C rocker switch.

ⓘ For THERMOTRONIC automatic climate control with auxiliary heating, the "Cooling with air dehumidification" function can be activated only via the multimedia system.

▶ Switch on automatic mode using the AUTO rocker switch.

▶ If the windows continue to mist up, activate the "Windscreen demisting" function using the MAX rocker switch.

ⓘ You should select this setting only until the windscreen is clear again.

Windows misted up on the outside

▶ Switch on the windscreen wipers.

▶ Switch on automatic mode using the AUTO rocker switch.

ⓘ If you clean the windows regularly, they do not mist up as quickly.

Rear window heating

General notes

The rear window heating has a high current draw. You should therefore switch it off as soon as the window is clear. The rear window heating otherwise switches off automatically after several minutes.

If the battery voltage is too low, the rear window heating may switch off.

Switching on/off

▶ Turn the key to position 2 in the ignition lock (▷ page 153).

▶ Press rocker switch REAR up or down.
The indicator lamp above rocker switch REAR lights up or goes out.

Problems with the rear window heating

Problem	Possible causes/consequences and ▶ Solutions
The rear window heating has switched off prematurely or cannot be switched on.	The battery has not been sufficiently charged. ▶ Switch off any consumers that are not required, e.g. reading lamps, interior lighting or the seat heating. When the battery is sufficiently charged, the rear window heating can be switched on again.

Activating/deactivating air-recirculation mode

General notes

You can also temporarily deactivate the flow of fresh air manually if unpleasant odours are entering the vehicle from outside. The air already inside the vehicle will then be recirculated.

If you activate air-recirculation mode, the windows can mist up more quickly, particularly at low temperatures. Activate air-recirculation mode only briefly to prevent the windows from misting up.

Switching on/off

- ▶ Turn the key to position 2 in the ignition lock (▷ page 153).
- ▶ **To activate:** press rocker switch up or down.
  The indicator lamp above rocker switch lights up.

Air-recirculation mode is activated automatically:

- at high outside temperatures
- at high levels of pollution (THERMOTRONIC automatic climate control only)
- in tunnels (vehicles with a navigation system only)

The indicator lamp above rocker switch is not lit when automatic air-recirculation mode is activated. Outside air is added after approximately 30 minutes.

- ▶ **To deactivate:** press rocker switch up or down.
  The indicator lamp above rocker switch goes out.

"Air-recirculation" mode is deactivated automatically:

- after approximately five minutes at outside temperatures below approximately 5 °C
- after approximately five minutes if "Cooling with dehumidification" is deactivated
- after approximately 30 minutes at outside temperatures above approximately 5 °C if the "Cooling with dehumidification" function is activated

Convenience opening or closing using the air-recirculation button

⚠ WARNING

When the convenience closing feature is operating, parts of the body could become trapped in the closing area of the side window and the sliding sunroof. There is a risk of injury.

Observe the complete closing procedure when the convenience closing feature is operating. When closing make sure that no parts of the body are in the closing area.

⚠ WARNING

During convenience opening parts of the body could be drawn in or become trapped between the side window and window frame. There is a risk of injury.

When opening, make sure that nobody is touching the side window. If someone becomes trapped, immediately press the switch in the door to stop the movement of the side windows. To continue closing the side window, pull on the switch.

- ▶ **Convenience closing feature:** press and hold rocker switch up or down until the side windows start to close automatically.
  Vehicles with panorama sliding sunroof: the sliding sunroof or panorama sliding sunroof closes simultaneously.
  The indicator lamp above rocker switch lights up. Air-recirculation mode is activated.
  If you open the side windows or the panorama sliding sunroof manually after closing with the convenience closing feature, they will remain in this position when opened using the convenience opening feature.

If parts of the body are in the closing area during convenience closing, proceed as follows:

- ▶ Press button to stop the side windows.
  The side windows stop.
- ▶ Then, to open the side windows, press button again.
- ▶ **Only vehicles with panorama sliding sunroof:** press the switch to stop the panorama sliding sunroof.
  The panorama sliding sunroof stops.
- ▶ Then, to open the panorama sliding sunroof, pull back on switch.

Notes on the automatic reversing function for:

- the side windows (▷ page 99)
- the panorama sliding sunroof (▷ page 102)

- ▶ **Convenience opening feature:** press and hold rocker switch up or down until the side windows start to open automatically.
  Vehicles with panorama sliding sunroof: the panorama sliding sunroof opens simultaneously.
  The indicator lamp above rocker switch goes out. Air-recirculation mode is deactivated.

Switching the residual heat on/off

General notes

The "Residual heat" function is available only with THERMOTRONIC automatic climate control and THERMATIC automatic climate control with auxiliary heating.

When the engine is switched off, it is possible to make use of the residual heat of the engine to heat or ventilate the front compartment of the vehicle for approximately 30 minutes. The heating or ventilation time depends on the set interior temperature.

Switching on/off

- ▶ Turn the key to position 0 in the ignition lock or remove it (▷ page 153).
- ▶ **To switch on:** press rocker switch MENU REST up or down.
  The indicator lamp above rocker switch MENU REST lights up.

The blower will run at a low speed regardless of the airflow setting.

If you switch on the "Residual heat" function at high temperatures, only the ventilation will be activated. The blower runs at medium speed.

- ▶ **To switch off:** press rocker switch MENU REST up or down.
  The indicator lamp above rocker switch MENU REST goes out.

Residual heat is switched off automatically:

- after approximately 30 minutes
- when the ignition is switched on
- if the battery voltage drops
- when the auxiliary heating is switched on

Perfume atomiser

Operating the perfume atomiser

⚠ WARNING

If children open the vial, they could drink the perfume or it could come into contact with their eyes. There is a risk of injury. Therefore, do not leave children unsupervised in the vehicle.

If the perfume liquid has been drunk, consult a doctor. If perfume comes into contact with your eyes or skin, rinse the eyes with clean water. If you continue to experience difficulties, consult a doctor.

Environmental note

Full vials must not be disposed of with household waste. They must be collected separately and disposed of in an environmentally responsible recycling system.

Dispose of full vials in an environmentally responsible manner and take them to a harmful substance collection point.

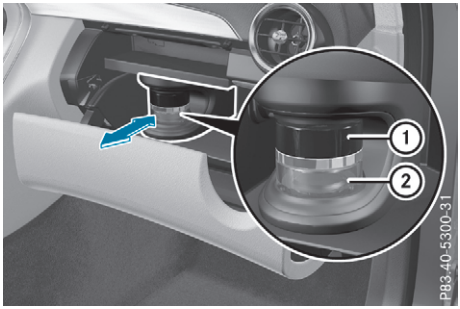

① Vial lid
② Vial

The perfume atomiser helps to improve driving comfort.

Via the multimedia system you can:

- switch the perfume atomiser on or off (▷ page 312)
- adjust the perfume intensity (▷ page 312)

The following conditions can affect your perception of the perfume intensity:

- operating mode of automatic climate control
- interior temperature
- time of year or day
- air humidity
- physiological condition of occupants, e.g. fatigue or hunger

The perfume atomiser is active only when the glove compartment is closed.

The perfume atomiser is provided with a pre-filled vial. You can also choose from a variety of filled perfume vials and an empty vial that you can fill yourself.

If you refill an empty perfume vial, observe the separate information sheet attached to the vial.

! If you do not use genuine Mercedes-Benz interior perfumes, observe the manufacturers' safety notices on the perfume packaging.

Do not refill the pre-filled perfume vial when it is empty. Dispose of the used vial after use.

- ▶ **To insert the perfume vial:** open the glove compartment (▷ page 321).
- ▶ Slide the perfume vial into the holder as far as it will go.
- ▶ **To remove the perfume vial:** pull out the perfume vial.
- ▶ **To refill the perfume vial:** unscrew the lid of the empty perfume vial to refill it yourself.
- ▶ Refill the vial with a maximum of 15 ml of the desired liquid perfume.
- ▶ Screw the lid back on to the vial.

! Only refill the vial when you are outside the vehicle. Otherwise, liquid perfume could drip into the interior and contaminate it.

Always refill the empty refillable vial with the same perfume. Otherwise, you might not achieve optimum results from the perfume atomiser.

Problems with the perfume atomiser

Problem	Possible causes/consequences and ▶ Solutions
The vehicle interior is not perfumed although the perfume atomiser has been activated.	The perfume vial has not been pushed into the holder as far as it will go. ▶ Slide the perfume vial into the holder as far as it will go.
	The perfume vial is not filled sufficiently. ▶ **Pre-filled vials:** dispose of the empty vial. ▶ Use a new pre-filled vial. ▶ **Refillable vials:** refill the vial with a maximum of 15 ml of the same perfume.
	The perfume atomiser is faulty. ▶ Have the perfume atomiser checked at a qualified specialist workshop.

Ionisation

Ionisation is used to purify and freshen the air in the vehicle interior, which is conducive to a pleasant climate.

The ionisation of the interior air is odourless and cannot, directly, be perceived in the vehicle interior.

You can switch ionisation on or off using the multimedia system (▷ page 312).

Ionisation can only be operated when the automatic climate control is switched on. The side air vent on the driver's side must be open.

Auxiliary heating

Important safety notes

⚠ **DANGER**

If the exhaust pipe is blocked or sufficient ventilation is not possible, toxic exhaust fumes can enter the vehicle, especially carbon monoxide. This is the case, e.g. in enclosed spaces, or if the vehicle is stuck in snow. There is a risk of fatal injuries.

You should switch off the auxiliary heating in enclosed spaces which do not have an extraction system, e.g. a garage. If the vehicle is stuck in snow and you must leave the auxiliary heating running, keep the exhaust pipe and the area around the vehicle clear of snow. To guarantee a sufficient supply of fresh air, open a window on the side of the vehicle away from the wind.

⚠ WARNING

When the auxiliary heating is switched on, parts of the vehicle can become very hot.

Flammable materials such as leaves, grass or twigs may ignite if they come into contact with:

- hot parts of the exhaust system
- the exhaust gas itself

There is a risk of fire.

When the auxiliary heating is switched on, make sure that:

- no flammable materials come into contact with hot vehicle components
- the exhaust gas can escape from the exhaust pipe unhindered
- the exhaust gas does not come into contact with flammable materials.

The auxiliary heating unit is fitted under the front wing on the right-hand side of the vehicle. The emissions outlet is found behind the front wheel on the right-hand side of the vehicle.

! Operating the auxiliary heating/ventilation draws on the vehicle battery. After you have heated or ventilated the vehicle a maximum of two times, drive for a longer distance.

Switch the auxiliary heating on regularly – once a month – for about ten minutes.

The auxiliary heating heats the air in the vehicle interior to the set temperature. This occurs without using the heat of the running engine. The auxiliary heating is operated directly using the vehicle's fuel. For this reason, the fuel tank level must be above the reserve range to ensure that the auxiliary heating functions.

The auxiliary heating or auxiliary ventilation automatically adjusts to changes in temperature and weather conditions. For this reason, the auxiliary heating could switch from ventilation mode to heating mode or from heating mode to ventilation mode.

The auxiliary heating switches off when the engine is switched off. The auxiliary ventilation is not active if the engine is running.

The auxiliary heating or auxiliary ventilation switches off automatically after 50 minutes. This time limit can be altered. To do this, consult a qualified specialist workshop.

You cannot use the auxiliary ventilation to cool the vehicle interior to a temperature lower than the outside temperature.

Before switching on

- ▶ Turn the key to position 2 in the ignition lock (▷ page 153).
- ▶ Set the desired temperature using rocker switch ▼▲ on the front control panel.

If you do not alter the temperature before switching on the auxiliary heating or auxiliary ventilation, the last temperature setting will be adopted.

Auxiliary heating or auxiliary ventilation can also be switched on if the manually set climate control is activated. Optimum comfort is attained when the system is set to automatic mode. Set the temperature to 22 °C.

You can switch the auxiliary heating or auxiliary ventilation on or off:

- using the rocker switch on the centre console (▷ page 148)
- using the remote control (▷ page 148)

The remote control can be used to set up to three departure times, one of which may be preselected.

Switching the auxiliary heating/ventilation on/off using the centre console rocker switch

General notes

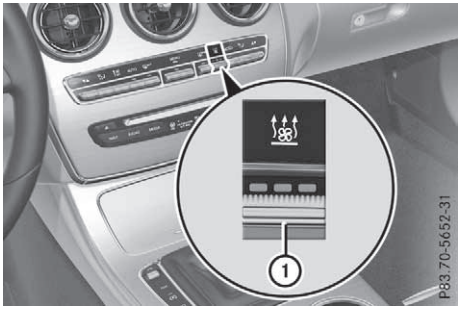

The colours of the indicator lamps above rocker switch ① have the following meanings:

- blue: auxiliary ventilation is switched on
- red: auxiliary heating is switched on
- yellow: departure time is preselected

Operation using the app: the auxiliary heating/ventilation can also be operated via the Mercedes me connect app. For more information, refer to the separate Owner's Manual: http://manuals.daimler.com/baix/cars/ connectme/en_GB/index.html.

Switching on/off

▶ **To switch on auxiliary heating or auxiliary ventilation:** press the ① rocker switch up or down.
The red or the blue indicator lamp above rocker switch ① lights up.

▶ **To set the temperature:** switch on auxiliary heating or auxiliary ventilation.
The multimedia system is activated for approximately one minute.

▶ Set the desired temperature via the multimedia system (see the Digital Owner's Manual).

▶ **To switch off auxiliary heating or auxiliary ventilation:** press the ① rocker switch up or down.
The red or the blue indicator lamp above rocker switch ① goes out.

Switching the auxiliary heating/ventilation on or off using the remote control

General notes

Your vehicle comes with one remote control. You may use two additional remote controls for your vehicle. For more information, please contact a qualified specialist workshop.

Store the remote control for the auxiliary heating so that the auxiliary heating cannot be activated unintentionally. In particular, ensure that the remote control for the auxiliary heating is kept out of the reach of children.

The remote control has a range of approximately 300 metres. This range is reduced by:

- sources of radio interference
- solid objects between the remote control and the vehicle
- the remote control being in an unfavourable position in relation to the vehicle
- transmitting from an enclosed space

If the remote control battery is low, the battery symbol on the left of the display is shown as empty. Replace the remote control battery and observe the important safety notes when doing so (▷ page 150).

Activating/deactivating the auxiliary heating or auxiliary ventilation

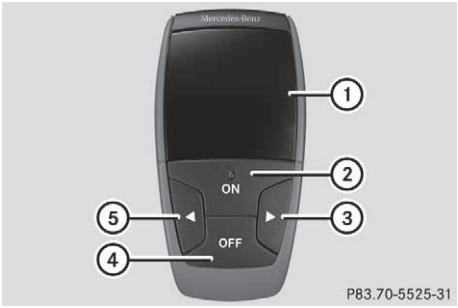

① Display
② ON Activates the auxiliary heating or auxiliary ventilation
Checks the status
③ ▷ Sets the departure time
④ OFF Deactivates the auxiliary heating or auxiliary ventilation
⑤ ◁ Sets the departure time

- ▶ **To activate:** press and hold the ON button. **ON** is shown on the remote control display.
- ▶ **To deactivate:** press and hold the OFF button. **OFF** is shown on the remote control display.

Checking the status of the auxiliary heating or auxiliary ventilation

▶ Briefly press the ON button.

The following messages may appear on the display:

Display	Meaning
	The auxiliary heating or auxiliary ventilation is deactivated.
	The auxiliary ventilation is activated. The number on the display shows the remaining time (in minutes) for the auxiliary ventilation.
	The auxiliary heating is activated. The number on the display shows the remaining time (in minutes) for the auxiliary heating.
	A departure time has been activated. The departure time appears on the display.
	A departure time has been activated. The auxiliary ventilation is currently activated. The number on the display shows the remaining time (in minutes) for the auxiliary ventilation.
	A departure time has been activated. The auxiliary heating is currently activated. The number on the display shows the remaining time (in minutes) for the auxiliary heating.

If the engine has not yet reached operating temperature when it is started, the auxiliary heating running time is increased. The auxiliary heating continues to run until the engine has reached its operating temperature. If this is the case, the symbol appears on the remote control display and the running time is zero minutes.

Setting the departure time

Make sure that the time set in the vehicle is correct before setting the departure time (see the Digital Owner's Manual). Otherwise, the auxiliary heating may activate at the wrong time and at an unsuitable location. When setting the departure time, also observe the important safety notes (▷ page 146).

- ▶ Briefly press the ON button.
- ▶ Press the ◁ or ▷ button repeatedly until the time to be changed appears on the display.
- ▶ Press the ON and OFF buttons simultaneously.
  The symbol on the remote control display flashes.
- ▶ Press the ◁ or ▷ button to set the desired departure time.

ⓘ The longer you press the ◁ or ▷ button, the more quickly the time changes.

- ▶ Press the ON and OFF buttons simultaneously.
  The new departure time is stored.

Activating the set departure time

- ▶ Briefly press the ON button.
- ▶ Press the ◁ or ▷ button repeatedly until the desired departure time appears on the display.
- ▶ Press the ON button.
  The symbol, the departure time and, depending on the selected departure time, the letter **A, B** or **C** appears on the display.

Deactivating the set departure time

- ▶ Briefly press the ON button.
  The status of the auxiliary heating is shown on the display.
- ▶ Press the ▷ button.
  The first departure time stored appears on the display.
- ▶ Press the OFF button.
  OFF is shown on the remote control display.

Replacing the remote control battery

Important safety notes

⚠ WARNING

Batteries contain toxic and corrosive substances. If batteries are swallowed, it can result in severe health problems. There is a risk of fatal injury.

Keep batteries out of the reach of children. If a battery is swallowed, seek medical attention immediately.

Environmental note

Batteries contain pollutants. It is illegal to dispose of them with the household rubbish. They must be collected separately and disposed of in an environmentally responsible recycling system.

Dispose of batteries in an environmentally responsible manner. Take discharged batteries to a qualified specialist workshop or to a collection point for used batteries.

Replacing the battery

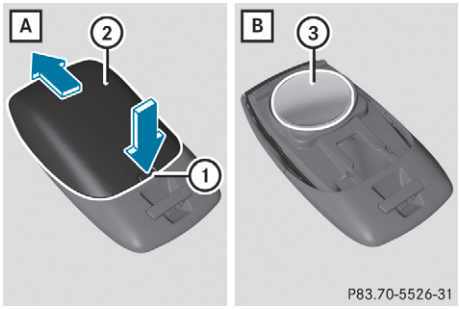

A CR2450 lithium battery is required when replacing the battery.

- ▶ Press a pointed object into recess ①.
- ▶ Slide battery cover ② backwards in the direction of the arrow.
- ▶ Insert new battery ③ with the lettering facing upwards.
- ▶ Slide battery cover ② in the opposite direction to the arrow on the remote control until it engages.

Problems with the auxiliary heating/ventilation

Problem	Possible causes/consequences and ▶ Solutions
FAIL	The signal transmission between the transmitter and the vehicle is faulty. ▶ Change your position in relation to the vehicle, moving closer if necessary.
FAIL	The auxiliary heating or auxiliary ventilation cannot be switched on or has switched itself off. The starter battery is not sufficiently charged. ▶ Charge the starter battery.
	The fuel level has dropped into the reserve range. ▶ Refuel at the nearest filling station.

Problem	Possible causes/consequences and ▶ Solutions
	The auxiliary heating or auxiliary ventilation is faulty. ▶ Have the auxiliary heating or auxiliary ventilation checked at a qualified specialist workshop.
The battery symbol on the left of the remote control display is shown as empty.	The remote control battery is discharged. ▶ Replace the remote control battery (▷ page 150).

Air vents

Important safety notes

⚠ WARNING

Very hot or very cold air can flow from the air vents. This could result in burns or frostbite in the immediate vicinity of the air vents. There is a risk of injury.

Make sure that all vehicle occupants always maintain a sufficient distance to the air outlets. If necessary, redirect the airflow to another area of the vehicle interior.

In order to ensure the direct flow of fresh air through the air vents into the vehicle interior, please observe the following notes:

- keep the air inlet between the windscreen and the bonnet free of blockages, such as ice, snow or leaves
- never cover the vents or ventilation grilles in the vehicle interior

Adjusting the air vents

Air vents are located:

- on the left and right-hand side of the dashboard
- in the middle of the dashboard
- in the rear centre console, depending on equipment in the vehicle

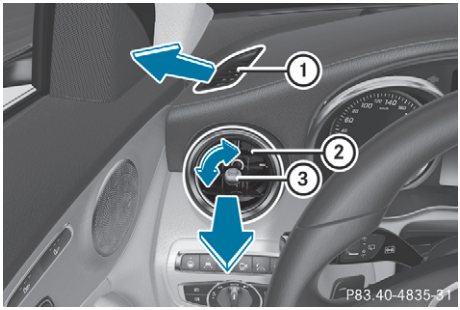

Side air vent (example)

① Side window demister vent
② Side air vent, left
③ Control for left side air vent

▶ **To open or close:** turn thumbwheel ③ to the left or right as far as it will go.

▶ **To adjust the air direction:** hold side air vent ② by thumbwheel ③ and move it up or down or to the left or right.

Adjusting the rear air vents (see Digital Owner's Manual).

Running-in notes

Important safety notes

In certain driving and driving safety systems, the sensors adjust automatically while a certain distance is being driven after the vehicle has been delivered or after repairs. Full system effectiveness is not reached until the end of this teach-in process.

Brake pads/linings and discs that either are new or have been replaced achieve optimum braking effect only after several hundred kilometres of driving. Compensate for the reduced braking effect by applying greater force to the brake pedal.

The first 1500 km

The more you treat the engine with sufficient care at the start, the more satisfied you will be with the engine performance later on.

- You should therefore drive at varying road speeds and engine speeds for the first 1500 km.
- Avoid overstraining the vehicle during this period, e.g. driving at full throttle.
- When shifting gears manually, shift up in good time, before the rev counter needle reaches ⅔ of the way to the red area of the rev counter display.
- Do not shift down a gear manually in order to brake.
- Vehicles with automatic transmission: try to avoid depressing the accelerator pedal beyond the pressure point (kickdown).

Additional notes on running in Mercedes-AMG vehicles:

- Do not drive at speeds above 140 km/h for the first 1500 km.
- Allow the engine to reach a maximum engine speed of 4500 rpm only briefly.
- Drive the vehicle mainly in drive program **C** for the first 1500 km.

After 1500 km, you can increase the engine speed gradually and accelerate the vehicle to full speed.

You should also observe these notes on running-in if the engine or parts of the drive train on your vehicle have been replaced.

Always observe the maximum permissible speed.

Locking rear axle differential (Mercedes-AMG C 63/C 63 S)

Your vehicle is equipped with a self-locking differential on the rear axle.

Change the oil to improve protection of the rear axle differential:

- after a running-in period of 3000 km
- every 50,000 km or 3 years

These oil changes prolong the service life of the differential. Have the oil change carried out at a qualified specialist workshop.

Driving

Important safety notes

⚠ WARNING

Objects in the driver's footwell can impede pedal travel or block a pedal which is depressed. This jeopardises safe operation of the vehicle. There is a risk of an accident.

Stow all objects in the vehicle safely, so that they cannot reach the driver's footwell. Make sure the floormats and carpets are properly secured so that they cannot slip and obstruct the pedals. Do not lay several floormats or carpets on top of one another.

⚠ WARNING

Unsuitable footwear can hinder correct usage of the pedals, e.g.:

- shoes with thick soles
- shoes with high heels
- slippers

There is a risk of an accident.

Wear suitable footwear to ensure correct usage of the pedals.

⚠ WARNING

If you switch off the ignition while driving, safety-relevant functions are only available with limitations, or not at all. This could affect,

for example, the power steering and the brake boosting effect. You will require considerably more effort to steer and brake. There is a risk of an accident.

Do not switch off the ignition while driving.

⚠ **WARNING**

If the parking brake has not been fully released when driving, the parking brake can:

- overheat and cause a fire
- lose its hold function.

There is a risk of fire and an accident. Release the parking brake fully before driving off.

! Do not warm up the engine when the vehicle is stationary. Drive off immediately. Avoid high engine speeds and driving at full throttle until the engine has reached its operating temperature.

Only shift the automatic transmission to the desired drive position when the vehicle is stationary.

Where possible, avoid spinning the drive wheels when pulling away on slippery roads. You could otherwise damage the drive train.

! **Mercedes-AMG vehicles:** at low engine oil temperatures (below +20 °C), the maximum engine speed is restricted in order to protect the engine. To protect the engine and maintain smooth engine operation, avoid driving at full throttle when the engine is cold.

Hybrid vehicles: It is essential to read the information in the supplementary manual. Otherwise, you may fail to recognise dangers.

Key positions

Key

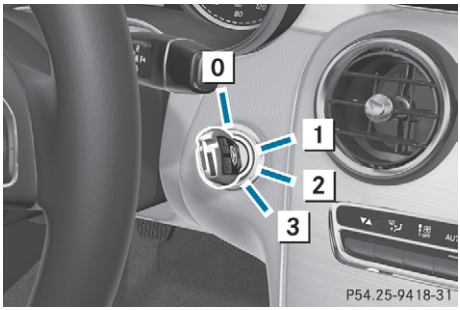

0 To remove the key

1 Power supply for some consumers, such as the windscreen wipers

2 Ignition (power supply for all consumers) and drive position

3 To start the vehicle

ⓘ If the key does not belong to the vehicle, it can still be turned in the ignition lock. However, the ignition will not be switched on. The engine cannot be started.

Vehicles with AIRPANEL: you can open the shutters in the radiator trim by turning the key to position 2 in the ignition lock. After approximately 120 seconds, the shutters open automatically. Further information on opening and cleaning the shutters (▷ page 351).

Start/Stop button

General notes

When you insert the Start/Stop button in the ignition lock, the system needs approximately two seconds of recognition time. You can then use the Start/Stop button.

Pressing the Start/Stop button several times in succession corresponds to the different key positions in the ignition lock. This is the case only if you are not depressing the brake pedal.

If you depress the brake pedal and press the Start/Stop button, the engine starts immediately.

A check that periodically establishes a radio connection between the vehicle and the key determines whether a valid key is in the vehicle. This occurs, for example, when the engine is started.

To start the vehicle without actively using the key:

- the Start/Stop button must be inserted in the ignition lock
- the key must be in the vehicle
- the vehicle must not be locked with the key or KEYLESS-GO (▷ page 86)

Do not keep the key:

- with electronic devices, e.g. a mobile phone or another key
- with metallic objects, e.g. coins or metal foil
- inside metallic objects, e.g. a metal case

This can impair the key's function.

If you lock the vehicle with the key's remote control or with KEYLESS-GO, after a short time:

- you will no longer be able to switch on the ignition with the Start/Stop button
- you will no longer be able to start the engine with the Start/Stop button until the vehicle is unlocked again

If you lock the vehicle centrally using the button on the front door (▷ page 92), you can continue to start the engine with the Start/Stop button.

You can switch off the engine while the vehicle is in motion by pressing and holding the Start/Stop button for around three seconds. This function operates independently of the ECO start/stop automatic engine switch-off function.

Key positions with the Start/Stop button

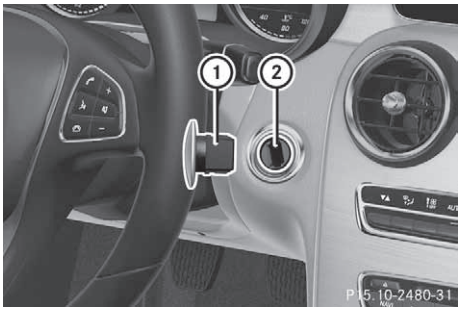

① Start/Stop button
② Ignition lock

When you switch on the ignition, all the indicator lamps on the instrument cluster light up. Warning and indicator lamps: see (▷ page 295).

If Start/Stop button ① has not yet been pressed, this is the same as the key having been removed.

▶ **To switch on the power supply:** press Start/Stop button ① once.
The power supply is switched on. You can now activate the windscreen wipers, for example.

The power supply is switched off again if:

- the driver's door is opened and
- you press Start/Stop button ① twice when in this position

▶ **To switch on the ignition:** press Start/Stop button ① twice.
The ignition is switched on.

The ignition is switched off again if:

- you do not start the engine from this position within 15 minutes
- you press Start/Stop button ① once when in this position

The power supply is switched off again if:

- the driver's door is opened and
- you press Start/Stop button ① once when in this position

Removing the Start/Stop button

You can remove the Start/Stop button from the ignition lock and start the vehicle as normal using the key.

It is possible to switch between Start/Stop button mode and key operation only when the transmission is in position P.

▶ Remove Start/Stop button ① from ignition lock ②.

You do not have to remove the Start/Stop button from the ignition lock when you leave the vehicle. You should, however, always take the key with you when leaving the vehicle. As long as the key is in the vehicle:

- the vehicle can be started using the Start/Stop button
- the electrically powered equipment can be operated

Starting the vehicle

Important safety notes

⚠ WARNING

If children are left unsupervised in the vehicle, they could:

- open doors, thereby endangering other persons or road users
- get out and be struck by oncoming traffic
- operate vehicle equipment and become trapped, for example

In addition, the children could also set the vehicle in motion, for example, if they:

- release the parking brake
- shift the automatic transmission out of park position P or shift manual transmission into neutral
- start the engine

There is a risk of an accident and injury.

When leaving the vehicle, always take the key with you and lock the vehicle. Never leave children and animals unattended in the vehicle. Keep the keys out of the reach of children.

⚠ WARNING

Combustion engines emit poisonous exhaust gases such as carbon monoxide. Inhaling these exhaust gases leads to poisoning. There is a risk of fatal injury. Therefore never leave the engine running in enclosed spaces without sufficient ventilation.

⚠ WARNING

Flammable materials introduced through environmental influence or by animals can ignite if in contact with the exhaust system or parts of the engine that heat up. There is a risk of fire.

Carry out regular checks to make sure that there are no flammable foreign materials in the engine compartment or in the exhaust system.

General notes

Vehicles with a petrol engine: the catalytic converter is preheated for up to 30 seconds after a cold start. The sound of the engine may change during this time.

Manual transmission

- ▶ Depress the brake pedal and keep it depressed.
- ▶ Fully depress the clutch pedal.
- ▶ Engage neutral.

Automatic transmission

- ▶ Shift the transmission to position P (▷ page 166).
  The transmission position indicator on the multifunction display shows P (▷ page 167).

ⓘ You can start the engine in transmission position P and N.

Starting procedure using the key

To start the engine using the key instead of the Start/Stop button, pull the Start/Stop button out of the ignition lock.

- ▶ **To start a diesel engine:** turn the key to position 2 in the ignition lock (▷ page 153). The preglow indicator lamp on the instrument cluster lights up.
- ▶ Turn the key to position 3 in the ignition lock and release it as soon as the engine is running.

ⓘ **Vehicles with a diesel engine:** you can start the engine without preglow if the engine is warm.

If the engine will not start:

- ▶ Remove the key from the ignition lock.
- ▶ Reinsert the key in the ignition lock after waiting for a short period.
- ▶ Turn the key to position 2 in the ignition lock (▷ page 153).
  The indicator lamps on the instrument cluster light up (▷ page 295).
- ▶ Turn the key to position 3 (▷ page 153) in the ignition lock and release it as soon as the engine is running.

Starting procedure using the Start/Stop button

The Start/Stop button is available only on vehicles with KEYLESS-GO or the KEYLESS-GO start function.

The Start/Stop button can be used to start the vehicle manually without inserting the key in the ignition lock. The key must be in the vehicle and the Start/Stop button must be inserted in the ignition lock. This mode for starting the engine manually operates independently of the ECO start/stop automatic engine start function.

You can start the engine if a valid key is in the vehicle. Switch off the engine and always take the key with you when leaving the vehicle, even if you leave it for only a short time. Observe the important safety notes.

- ▶ Depress the brake pedal and keep it depressed.
- ▶ Press the Start/Stop button once (▷ page 154).
  Vehicles with a petrol engine: the engine starts.
  Vehicles with a diesel engine: preglow is activated and the engine starts.

Pulling away

General notes

⚠ WARNING

Vehicles with automatic transmission:

If the engine speed is above the engine idling speed and you then engage transmission position **D** or **R**, the vehicle may accelerate suddenly. There is a risk of an accident.

When engaging transmission position **D** or **R**, always keep the brake pedal firmly depressed and do not depress the accelerator pedal at the same time.

! Vehicles with manual transmission: change gear in good time and avoid spinning the wheels. You could otherwise damage the vehicle.

Depress the accelerator carefully when pulling away.

The vehicle automatically locks centrally once you have pulled away. The locking knobs in the doors drop down.

You can open the doors from the inside at any time.

You can also deactivate the automatic door locking system; see the Digital Owner's Manual.

Vehicles with automatic transmission: it is possible to shift the transmission from position P to the desired position only if you depress the brake pedal. If you do not depress the brake pedal, the DIRECT SELECT lever can still be moved but the parking lock remains engaged.

i Vehicles with automatic transmission: upshifts take place at higher engine speeds after a cold start. This helps the catalytic converter to reach its operating temperature more quickly.

Information on automatically releasing the electrical parking brake (▷ page 183).

Pulling away with a trailer



To ensure that you do not roll backwards when pulling away on an uphill slope, apply the electric parking brake.

- ▶ Press and hold handle ①.
  The electric parking brake continues to brake and prevent the vehicle from rolling backwards.
  The red (P) indicator lamp in the instrument cluster remains lit.
- ▶ Depress the accelerator pedal.
- ▶ As soon as the car/trailer combination is held by the driving force of the engine, release lever ①.
  the electric parking brake is released
  The red (P) indicator lamp in the instrument cluster goes out.

For further information on the electric parking brake, see (▷ page 181).

Hill start assist

Hill start assist helps you when pulling away forwards or in reverse on an uphill gradient. It holds the vehicle for a short time after you have removed your foot from the brake pedal. This gives you enough time to move your foot from the brake pedal to the accelerator pedal and depress it before the vehicle begins to roll.

⚠ WARNING

After a while, hill start assist no longer holds the vehicle and it may roll away. There is a risk of an accident and injury.

Therefore, quickly move your foot from the brake pedal to the accelerator pedal. Never leave the vehicle when it is held by hill start assist.

Hill start assist is not active if:

- you are pulling away on a level road or a downhill gradient
- the transmission is in position N on vehicles with automatic transmission
- the electric parking brake is applied
- ESP® is malfunctioning

ECO start/stop function

Introduction

The ECO start/stop function switches the engine off automatically if the vehicle is stopped under certain conditions.

When the vehicle pulls away again, the engine starts automatically. The ECO start/stop function thereby helps you to reduce the fuel consumption and emissions of your vehicle.

Important safety notes

⚠ WARNING

If the engine is switched off automatically and you exit the vehicle, the engine is restarted automatically. The vehicle may begin moving. There is a risk of accident and injury.

If you wish to exit the vehicle, always turn off the ignition and secure the vehicle against rolling away.

General notes



① ECO start/stop display

Hybrid vehicles: It is essential to read the information in the supplementary manual. Otherwise, you may fail to recognise dangers.

If the ECO symbol Ⓐ is shown on the multifunction display, the ECO start/stop function switches the engine off automatically if the vehicle stops moving.

If the ECO start/stop function has been switched off manually (▷ page 159) or as the result of a malfunction, the Ⓐ or Ⓐ ECO symbol is not displayed.

Except Mercedes-AMG C 63/C 63 S: the ECO start/stop function is switched on whenever you start the engine using the key or the Start/Stop button.

Mercedes-AMG C 63/C 63 S: the ECO start/stop function is automatically switched on only in drive program **C**. The ECO start/stop function is switched on whenever you restart the engine using the key or the Start/Stop button.

This is the case if:

- the ignition was switched off for more than four hours or
- the ECO start/stop function had been switched on before the engine was switched off

Automatic engine stop

General notes

The ECO start/stop function is operational and the Ⓐ ECO symbol is shown on the multifunction display if:

- the indicator lamp on the ECO button is lit green
- the outside temperature and atmospheric air pressure are within a range that is suitable for the system
- the engine is at normal operating temperature
- the set temperature for the vehicle interior has been reached
- the battery is sufficiently charged
- the system does not detect moisture on the windscreen when the air-conditioning system is switched on
- the bonnet is closed
- the driver's door is closed and the driver's seat belt is fastened

If all conditions for automatic engine stop are not fulfilled, the Ⓐ ECO symbol is shown.

All the vehicle's systems remain active when the engine is switched off automatically.

Mercedes-AMG C 63/C 63 S: the number of consecutive automatic engine stops is unlimited.

All other models: the engine can be switched off automatically a maximum of four times (initial stop, then three subsequent stops) in succession. The Ⓐ ECO symbol is shown on the multifunction display after the engine has been started automatically for the fourth time. When the Ⓐ ECO symbol is shown on the multifunction display, automatic engine stop is possible again.

Vehicles with manual transmission

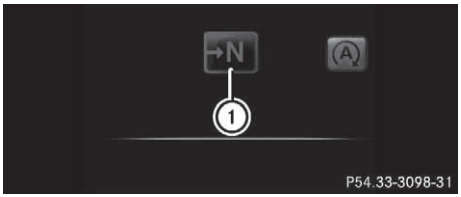

The ECO start/stop function switches off the engine automatically at low speeds.

- ▶ Brake the vehicle.
- ▶ Engage neutral **N** (follow gearshift instruction ① to engage neutral **N**, if necessary).
- ▶ Release the clutch pedal.
  The engine is switched off automatically.

Vehicles with automatic transmission

If the vehicle is braked to a standstill with the transmission in position D or N, the ECO start/stop function switches off the engine automatically.

The HOLD function can be activated if the engine has been switched off automatically. It is then not necessary to continue applying the brakes during the automatic stop phase. When you depress the accelerator pedal, the engine starts automatically and the braking effect of the HOLD function is deactivated.

Automatic engine start

General notes

The engine is started automatically if:

- you switch off the ECO start/stop function by pressing the ECO button
- you depress the accelerator pedal
- you engage reverse gear R
- you unfasten your seat belt or open the driver's door
- the vehicle starts to roll
- the brake system requires this
- the temperature in the vehicle interior deviates from the set range
- the system detects moisture on the windscreen when the air-conditioning system is switched on
- the battery's charge status is too low

Vehicles with manual transmission

! Only engage gear when the clutch pedal is depressed.

The engine is started automatically when you depress the clutch pedal.

Vehicles with automatic transmission

The engine is started automatically if:

- you switch off the ECO start/stop function by pressing the ECO button
- **Mercedes-AMG C 63 and Mercedes-AMG C 63 S:** you switch to drive program **RACE** (S-MODEL), **S+** or **S**
- **all other models:** you switch to drive program **S+**
- **Mercedes-AMG vehicles:** you permanently activate manual gearshifting (▷ page 171)
- in transmission position D or N, the brake pedal is released and the HOLD function is not active
- you depress the accelerator pedal
- you engage reverse gear R
- you move the transmission out of position P
- you unfasten your seat belt or open the driver's door
- the vehicle starts to roll
- the brake system requires this
- the temperature in the vehicle interior deviates from the set range
- the system detects moisture on the windscreen when the air-conditioning system is switched on
- the battery's charge status is too low

Shifting the transmission to position P does not start the engine.

If you shift the transmission from R to D, the ECO start/stop function is available as soon as the Ⓐ ECO symbol appears on the multifunction display.

Switching the ECO start/stop function off/on

Mercedes-AMG vehicles

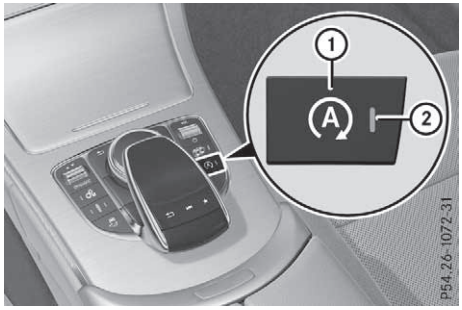

▶ **To switch off:** press ECO button ①. Indicator lamp ② and the Ⓐ or Ⓐ ECO symbol on the multifunction display go out.

▶ **To switch on:** press ECO button ①. Indicator lamp ② lights up.

If all conditions for automatic engine stop (▷ page 158) are fulfilled, the Ⓐ ECO symbol is shown on the multifunction display.

If all conditions for automatic engine stop (▷ page 158) are not fulfilled, the Ⓐ ECO symbol is shown on the multifunction display. If this is the case, the ECO start/stop function is not available.

If indicator lamp ② is off, the ECO start/stop function has been switched off manually or as the result of a malfunction. The engine will then not be switched off automatically when the vehicle stops.

The ECO start/stop function is switched off if:

- **Mercedes-AMG C 63 and Mercedes-AMG C 63 S:** you switch to drive program **RACE** (S-MODEL), **S+** or **S** (▷ page 162)
- **Mercedes-AMG C 43 4MATIC:** you switch to drive program **S+** (▷ page 162)
- you permanently activate manual gearshifting (▷ page 172)

If you have permanently activated manual gearshifting and then press ECO button ①, the ECO start/stop function is switched on.

All other models

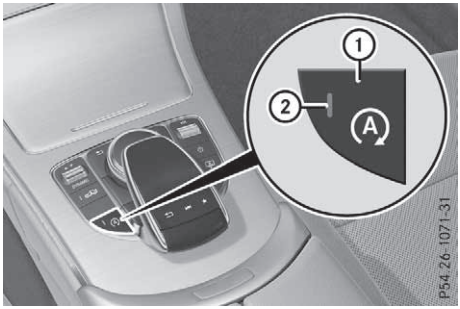

▶ **To switch off:** press ECO button ①. Indicator lamp ② and the Ⓐ or Ⓐ ECO symbol on the multifunction display go out.

▶ **To switch on:** press ECO button ①. Indicator lamp ② lights up. If all conditions for automatic engine stop (▷ page 158) are fulfilled, the Ⓐ ECO symbol is shown on the multifunction display.

If all conditions for automatic engine stop (▷ page 158) are not fulfilled, the ECO symbol is shown on the multifunction display. If this is the case, the ECO start/stop function is not available.

If indicator lamp ② is off, the ECO start/stop function has been switched off manually or as the result of a malfunction. The engine will then not be switched off automatically when the vehicle stops.

Selecting drive program **S+** switches off the ECO start/stop function. If you press ECO button ①, the ECO start/stop function is switched on.

AMG Performance adjustable exhaust system (Mercedes-AMG vehicles)

The volume of the AMG Performance exhaust system changes depending on the position of the switchable exhaust flap. The exhaust flap is adjusted automatically according to the selected drive program (▷ page 162).

You can also adjust the position of the exhaust flap and therefore the volume of the exhaust system manually.

The automatic adjustment of the exhaust flap is always active when you change drive program, regardless of the manual setting.

If you switch off the engine for less than four hours, the last selected setting remains active the next time the engine is started. If the ignition is switched off for more than four hours, the quietest setting is activated when the engine is next started.



Setting the volume:

▶ Press button ①.
If you select the loudest setting, indicator lamp ② lights up.

Mercedes-AMG C 63/C 63 S: you can preset the volume of the exhaust system for drive program **I** (Individual). Information on DYNAMIC SELECT and on configuring drive program **I** with the multimedia system (see Digital Owner's Manual).

Problems with the engine

Problem	Possible causes/consequences and ▶ Solutions
The engine does not start.	The HOLD function or Distance Pilot DISTRONIC is activated. ▶ Deactivate the HOLD function (▷ page 201) or Distance Pilot DISTRONIC (▷ page 197). ▶ Start the engine again (▷ page 155).
The engine does not start. The starter motor can be heard.	• The engine electronics are malfunctioning • The fuel supply is malfunctioning Before attempting to restart the engine: ▶ Turn the key back to position 0 in the ignition lock. or ▶ Press the Start/Stop button repeatedly until all indicator lamps on the instrument cluster go out. ▶ Start the engine again (▷ page 155). Avoid excessively long and frequent attempts to start the engine, as this will drain the battery. If the engine does not start after several attempts: ▶ Consult a qualified specialist workshop.
The engine does not start. The starter motor can be heard. The reserve fuel warning lamp is lit and the fuel gauge display is at the reserve level.	The fuel tank is empty. ▶ Refuel the vehicle.
The engine does not start. You cannot hear the starter motor.	The on-board voltage is too low because the battery is too weak or discharged. ▶ Jump-start the vehicle (▷ page 365). If the engine does not start despite attempts to jump-start it: ▶ Consult a qualified specialist workshop.
	The starter motor was exposed to excessively high thermal load. ▶ Start the engine again (▷ page 155). If the engine still does not start: ▶ Consult a qualified specialist workshop.
Vehicles with a petrol engine: The engine is not running smoothly and is misfiring.	The engine electronics or a mechanical component of the engine management system is malfunctioning. ▶ Depress the accelerator pedal only slightly. Otherwise, non-combusted fuel may get into the catalytic converter and damage it. ▶ Have the cause rectified immediately at a qualified specialist workshop.

Problem	Possible causes/consequences and ▶ Solutions
The coolant temperature display is showing more than 120 °C. A display message may also appear on the multifunction display and a warning tone may sound.	The coolant level is too low. The coolant is too hot and the engine is not being cooled sufficiently. ▶ Stop as soon as possible and allow the engine and the coolant to cool down. ▶ Check the coolant level (▷ page 345). Observe the warning notes as you do so and top up the coolant if necessary.
	If the coolant level is correct, the engine radiator fan may be faulty. The coolant is too hot and the engine is not being cooled sufficiently. ▶ Continue driving to the nearest qualified specialist workshop only if the coolant temperature is below 120 °C. ▶ Avoid heavy loads on the engine as you do so, e.g. driving in mountainous terrain and stop-start traffic.

DYNAMIC SELECT switch

Mercedes-AMG vehicles

General information

Use the DYNAMIC SELECT switch to select the drive program.

Available drive programs for Mercedes-AMG C 43 4MATIC:

S+ Sport Plus	Particularly sporty driving characteristics
S Sport	Sporty driving characteristics
C Comfort	Comfortable and economical driving characteristics
E Economy	Particularly economical driving characteristics
I Individual	Individual settings

Available drive programs for Mercedes-AMG C 63/C 63 S:

RACE (S-MODEL)	Driving characteristics suitable for a race circuit
S+ Sport Plus	Particularly sporty driving characteristics
S Sport	Sporty driving characteristics
C Comfort	Comfortable and economical driving characteristics
I Individual	Individual settings

Depending on the drive program selected, the following vehicle characteristics will change:

- the drive (engine and transmission management)
- the suspension
- the steering
- the driver assistance systems
- ESP® (Mercedes-AMG C 63/C 63 S)
- the position of the exhaust flap (Mercedes-AMG C 63/C 63 S)
- setting of the ECO start/stop function
- the availability of glide mode
- the climate control

Further information for automatic drive program characteristics (▷ page 169).

Additionally, in drive program **I** you can configure the respective vehicle characteristics via the multimedia system. You can find information about this under "DYNAMIC SELECT" in the vehicle's Digital Owner's Manual.

If the ignition is switched off for less than four hours, the previously selected drive program is activated when the engine is next started. If the ignition is switched off for more than four hours, drive program **C** is activated when the engine is next started.

Selecting the drive program

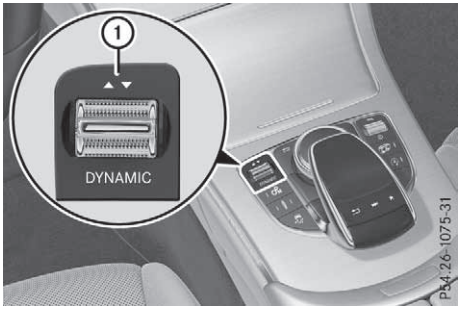

▶ Push DYNAMIC SELECT switch ① forwards or back until the desired drive program is selected.
The status icon of the selected drive program is shown on the multifunction display.

In addition, the current drive program settings are shown briefly on the multimedia system display.

You can also shift gears yourself using the steering wheel gearshift paddles. Further information on manual gearshifting (▷ page 171).

Additional settings

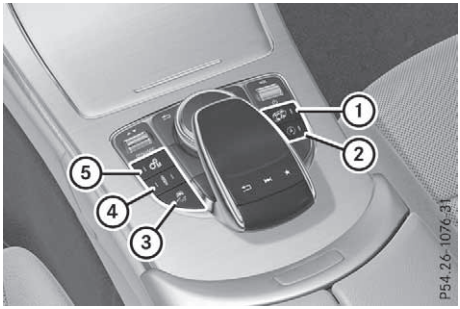

① Position of the exhaust flap (▷ page 160)
② ECO start/stop function (▷ page 157)
③ ESP® (▷ page 75)
④ Suspension (▷ page 204)
⑤ Permanently activates manual gearshifting (▷ page 171)

When you press buttons ① - ⑤ the corresponding setting is selected. The DYNAMIC SELECT switch setting is overwritten.

If you switch to drive program **I**, all stored characteristics are applied. This is also the case if you have previously pressed buttons ① - ⑤.

ⓘ **Mercedes-AMG C 43 4MATIC**: in a few countries, the ECO start/stop function is deactivated at the factory due to the quality of the available fuel. In this case, the ECO start/stop function is not available in any drive program, regardless of what is shown on the multimedia system display.

All other models

Hybrid vehicles: be sure to observe the notes in the supplement. Otherwise, you may fail to recognise dangers.

Use the DYNAMIC SELECT switch to change the drive program.

Depending on the drive program selected, the following vehicle characteristics will change:

- the drive (engine and transmission management)
- the suspension
- the steering
- the ECO start/stop function
- the climate control
  - the climate control settings
  - the rear window heating operation period
  - the performance of the seat heating

If the ignition is switched off for less than four hours, the previously selected drive program is activated when the engine is next started. If the ignition is switched off for more than four hours, drive program **C** is activated when the engine is next started.



DYNAMIC SELECT switch (example)

▶ Push DYNAMIC SELECT switch ① forwards or backwards until the desired drive program is selected.
The status icon of the selected drive program is shown on the multifunction display.

In addition, the current drive program settings are shown briefly on the multimedia system display.

ⓘ In a few countries, the ECO start/stop function is deactivated at the factory due to the quality of the available fuel. In this case, the ECO start/stop function is not available in any drive program, regardless of what is shown on the multimedia system display.

Available drive programs:

I Individual	Individual settings
S+ Sport Plus	Particularly sporty driving characteristics
S Sport	Sporty driving characteristics
C Comfort	Comfortable and economical driving characteristics
E Economy	Particularly economical driving characteristics

Additional information on drive programs for:

- vehicles with manual transmission (▷ page 165)
- vehicles with automatic transmission (▷ page 169)

Vehicles with automatic transmission: you can also shift gears yourself using the steering wheel gearshift paddles. Further information on manual gearshifting (▷ page 171).

Manual transmission

Gear lever

! Only engage gear when the clutch pedal is depressed.

! If you shift between gears 5 and 6, you must ensure that the gear lever is firmly pushed to the right as far as it will go. Otherwise, you could shift unintentionally to gear 3 or 4 and damage the transmission.

If you shift down at too high a speed (transmission braking), this can cause the engine to overrev, leading to engine damage.

Do not use the clutch bite point to keep the vehicle stationary on uphill gradients. There is otherwise a risk of damaging the clutch.

! On long and steep downhill gradients, especially if the vehicle is laden or towing a trailer, you must select gear 1, 2 or 3 in good time. By doing so, you will make use of the braking effect of the engine. This relieves the load on the brake system and prevents the brakes from overheating and wearing too quickly.

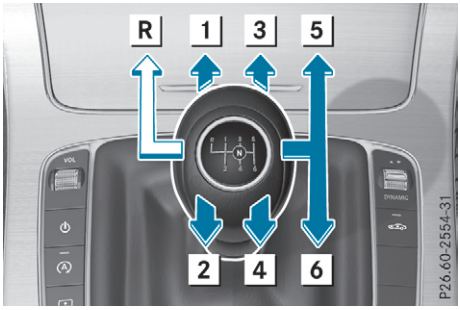

R Reverse gear
1 - 6 Forward gears

Selecting neutral N

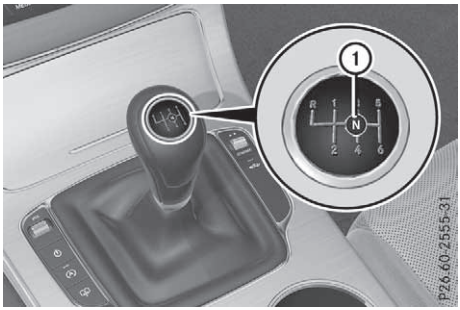

▶ Depress the clutch pedal fully.
▶ Shift the gear lever to position **N** ①.

Engaging reverse gear

! Select reverse gear R only when the vehicle is stationary. You could otherwise damage the transmission.

▶ Move the gear lever firmly to the left, beyond the pressure point, then forwards.

The ECO start/stop function is not available when reverse gear is engaged. For further infor-

mation on the ECO start/stop function, see (▷ page 157).

Gearshift recommendation

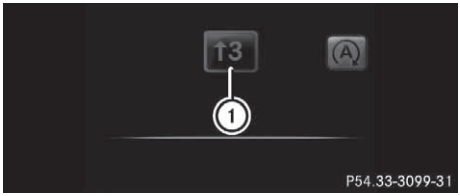

The gearshift recommendation assists you in adopting a fuel-efficient driving style. The recommended gear is shown on the multifunction display.

▶ Shift gear according to gearshift recommendation ① when shown on the multifunction display of the instrument cluster.

Drive programs

Drive program I (Individual)

In drive program **I**, the following properties of the drive program can be selected:

- the drive (engine and transmission management)
- the suspension
- the steering
- setting of the ECO start/stop function (▷ page 157)
- the climate control

Information on configuring drive program **I** via the multimedia system can be found under "DYNAMIC SELECT" in the vehicle's Digital Owner's Manual.

Drive program S+ (Sport Plus)

Drive program **S+** is characterised by the following:

- the vehicle exhibits particularly sporty driving characteristics
- the suspension exhibits particularly firm springing and damping settings (vehicles with AIRMATIC)
- the ECO start/stop function is switched off (▷ page 157)

Drive program S (Sport)

Drive program **S** is characterised by the following:

- the vehicle exhibits sporty driving characteristics
- the suspension exhibits firm springing and damping settings (vehicles with AIRMATIC)
- the ECO start/stop function is switched off (▷ page 157)

Drive program C (Comfort)

Drive program **C** is characterised by the following:

- the vehicle exhibits comfortable, economical driving characteristics
- the vehicle has improved driving stability, e.g. on slippery road surfaces
- the ECO start/stop function is switched on (▷ page 157)

Drive program E (Economy)

Drive program **E** is characterised by the following:

- the vehicle exhibits particularly economical driving characteristics
- the vehicle has improved driving stability, e.g. on slippery road surfaces
- the ECO start/stop function is switched on (▷ page 157)
- the performance of the air-conditioning and heating systems is reduced

Automatic transmission

Important safety notes

⚠ WARNING

If the engine speed is above the idling speed and you engage transmission position **D** or **R**, the vehicle could pull away suddenly. There is a risk of an accident.

When engaging transmission position **D** or **R**, always firmly depress the brake pedal and do not simultaneously accelerate.

⚠ WARNING

The automatic transmission switches to neutral position **N** when you switch off the engine. The vehicle may roll away. There is a risk of an accident.

After switching off the engine, always switch to parking position **P**. Prevent the parked vehicle from rolling away by applying the parking brake.

Hybrid vehicles: be sure to observe the notes in the supplement. Otherwise, you may fail to recognise dangers.

DIRECT SELECT lever

Overview of transmission positions

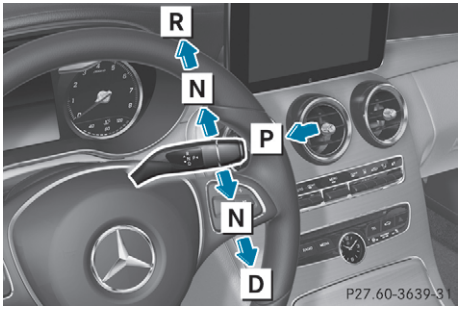

P Park position with parking lock
R Reverse gear
N Neutral
D Drive

The DIRECT SELECT lever is on the right of the steering column.

The DIRECT SELECT lever always returns to its original position. The current transmission position P, R, N or D is shown in the transmission position display on the multifunction display (▷ page 167).

Selects park position

! If the engine speed is too high or the vehicle is coasting, do not shift the automatic transmission directly from D to R, from R to D or directly to P. Otherwise, the automatic transmission may be damaged.

▶ Push the DIRECT SELECT lever switch in the direction of arrow P.

Engaging park position automatically

Park position P is automatically engaged if:

- you switch off the engine using the key and remove the key
- you switch off the engine using the key or using the Start/Stop button and open the driver's door or front-passenger door
- you open the driver's door when the vehicle is stationary or when driving at a very low speed and the transmission is in position D or R

Under certain conditions, the automatic transmission shifts to transmission position P automatically if the HOLD function or Distance Pilot DISTRONIC is activated. Observe the information on the HOLD function (▷ page 201) and Distance Pilot DISTRONIC (▷ page 195).

Engaging reverse gear

! Only move the automatic transmission to R when the vehicle is stationary.

▶ Depress the brake pedal.

▶ Push the DIRECT SELECT lever up past the first point of resistance.

The ECO start/stop function is not available when reverse gear is engaged. For further information on the ECO start/stop function, see (▷ page 157).

Engaging neutral

⚠ WARNING

If children are left unsupervised in the vehicle, they can:

- open doors and endanger other persons or road users
- climb out and be injured by the traffic
- operate vehicle equipment and, for example, trap themselves.

Children could also set the vehicle in motion, for example by:

- releasing the parking brake
- shifting the automatic transmission out of park position **P**
- starting the engine.

There is a risk of an accident and injury.

When leaving the vehicle, always take the key with you and lock the vehicle. Never leave children unattended in the vehicle. Always keep the key out of reach of children.

- ▶ If the transmission is in position D or R: push the DIRECT SELECT lever up or down to the first point of resistance.
- ▶ If the transmission is in position P: depress the brake pedal and push the DIRECT SELECT lever up or down to the first point of resistance.

If you switch the engine off with the transmission in position R or D, the automatic transmission shifts to N automatically.

With the key: if you then open the driver's door or the front-passenger door or remove the key from the ignition lock, the automatic transmission shifts to P automatically.

With the Start/Stop button: if you then open the driver's door or the front-passenger door, the automatic transmission shifts automatically to P.

If you want the automatic transmission to remain in neutral N, e.g. when having the vehicle cleaned in an automatic, tow-through car wash:

- ▶ **Vehicles with KEYLESS-GO or KEYLESS-GO start function:** remove the Start/Stop button from the ignition lock.
- ▶ Insert the key into the ignition lock.
- ▶ **All vehicles:** switch the ignition on.
- ▶ Depress the brake pedal and keep it depressed.
- ▶ Engage neutral N.
- ▶ Release the brake pedal.
- ▶ Release the electric parking brake.
- ▶ Switch off the ignition and leave the key in the ignition lock.

Engaging the drive position

- ▶ If the transmission is in position R or N: push the DIRECT SELECT lever down past the first point of resistance.
- ▶ If the transmission is in position P: depress the brake pedal and push the DIRECT SELECT lever down past the first point of resistance.

Transmission position and drive program display

The current transmission position and drive program appear on the multifunction display.

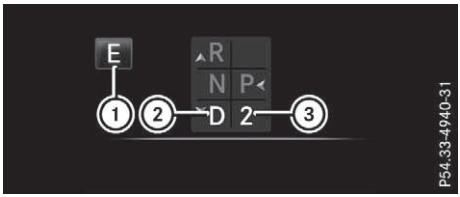

① Status icon, drive program
② Transmission position
③ Gear

The arrows in the transmission position display show how and into which transmission positions you can shift using the DIRECT SELECT lever.

If the transmission position display on the multifunction display is not working, you should pull away carefully to check whether the desired transmission position is engaged. Ideally, you should select transmission position D and drive program **E** (for Mercedes-AMG vehicles: drive program **C**) or **S**.

Transmission positions

P	**Park position** This safeguards the vehicle against rolling away when stopped. Only shift the transmission into position P (▷ page 166) when the vehicle is stationary. The parking lock should not be used as a brake when parking. In order to secure the vehicle, always apply the electric parking brake in addition to the parking lock. Park position P is automatically engaged if: • you switch off the engine using the key and remove the key • you switch off the engine using the key or using the Start/Stop button and open the driver's door or front-passenger door • you open the driver's door when the vehicle is stationary or when driving at a very low speed and the transmission is in position D or R In the event of a malfunction of the vehicle's electronics, the transmission may lock in position P. Have the vehicle electronics checked immediately at a qualified specialist workshop.
R	**Reverse gear** You can only shift the transmission into position R when the vehicle is stationary (▷ page 166).
N	**Neutral** Do not shift the transmission to N while driving. Otherwise, the automatic transmission could be damaged. No power is transmitted from the engine to the drive wheels. Releasing the brake pedal will allow you to move the vehicle freely, e.g. to push it or tow it. If ESP® is deactivated or faulty: shift the transmission to position N if the vehicle is in danger of skidding, e.g. on icy roads. If you switch the engine off with the transmission in position R or D, the automatic transmission shifts to N automatically. ! Coasting in neutral N may cause damage to the drive train.
D	**Drive** The automatic transmission changes gear automatically. All forward gears are available.

Driving tips

Changing gear

The automatic transmission shifts through the individual gears automatically when it is in transmission position D. This is determined by:

- the selected drive program
- the position of the accelerator pedal
- the speed of travel

Accelerator pedal position

Your driving style influences how the automatic transmission shifts gear:

- little throttle: early upshifting
- more throttle: late upshifting

Double-clutch function

When shifting down, the double-clutch function is active regardless of the drive program. The double-clutch function reduces load change reactions and is conducive to a sporty driving

style. The sound generated by the double-clutch function depends on the drive program.

Kickdown

Use kickdown for maximum acceleration:

▶ Depress the accelerator pedal beyond the point of resistance.
The automatic transmission shifts to a lower gear depending on the engine speed.

▶ Ease off the accelerator pedal once the desired speed is reached.
The automatic transmission shifts back up.

Glide mode

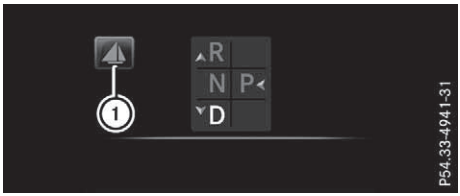

Glide mode is available depending on the equipment.

Glide mode is characterised by the following:

- the combustion engine is disconnected from the drive train
- the engine is running at idling speed
- the multifunction display hides the gear indicator and displays transmission position D in green (▷ page 167)
- **Mercedes-AMG vehicles:** the multifunction display shows status icon ① for the drive program's status icon

In drive program **E** or in drive program **C** (Mercedes-AMG C 63/C 63 S), you can activate and deactivate glide mode using the ECO button (▷ page 159).

Glide mode can be activated under the following conditions:

- the speed is within a suitable range
- the course of the road is suitable, e.g. no steep uphill or downhill gradients
- you are no longer depressing the accelerator pedal

Glide mode is deactivated under the following conditions:

- you depress the accelerator pedal
- you depress the brake pedal
- you change the transmission position (▷ page 166)
- you switch to drive program **RACE** (Mercedes-AMG C 63 S), **S+** or **S** (▷ page 162)
- you activate manual gearshifting (▷ page 171)
- you leave the suitable speed range

ⓘ If you have selected the "Eco" or "Comfort" setting (Mercedes-AMG C 63/C 63 S) for the drive (engine and transmission management) in drive program **I**, you can also activate glide mode. Information on DYNAMIC SELECT and on configuring drive program **I** via the multimedia system (see Digital Owner's Manual).

Towing a trailer

Not all models can tow a trailer. For further information, see (▷ page 235).

▶ Drive in the middle of the engine speed range on uphill gradients.

▶ **Manual gearshifting:** depending on the uphill or downhill gradient, shift to a gear (▷ page 171) in which the engine will run in the middle of the engine speed range.
This also applies if cruise control, Distance Pilot DISTRONIC or the speed limiter are activated.

Drive programs

All vehicles except Mercedes-AMG C 63/C 63 S

Drive program I (Individual)

In drive program **I**, the following properties of the drive program can be selected:

- the drive (engine and transmission management)
  and therefore indirectly the availability of glide mode and the properties of the driver assistance systems
- the suspension
- the steering
- the availability of the ECO start/stop function
- the climate control

To permanently shift the gears manually in drive program **I** using the steering wheel gearshift

paddles, select the **M** (Manual) setting for the drive (except Mercedes-AMG C 43 4MATIC).

Information on configuring drive program **I** with the multimedia system can be found under "DYNAMIC SELECT" in the vehicle's Digital Owner's Manual.

Drive program S+ (Sport Plus)

Drive program **S+** is characterised by the following:

- the vehicle exhibits particularly sporty driving characteristics.
- the vehicle pulls away in first gear.
- the automatic transmission shifts up later. Fuel consumption may be higher as a result of the later automatic transmission shift points.
- the suspension exhibits particularly firm springing and damping settings (vehicles with AIRMATIC).
- glide mode is not available.
- the ECO start/stop function is switched off (▷ page 157).

Drive program S (Sport)

Drive program **S** is characterised by the following:

- the vehicle exhibits sporty driving characteristics.
- the vehicle pulls away in first gear.
- the automatic transmission shifts up later. Fuel consumption may be higher as a result of the later automatic transmission shift points.
- the suspension exhibits firm springing and damping settings (vehicles with AIRMATIC).
- glide mode is not available.
- the ECO start/stop function is switched on (▷ page 157).

Drive program C (Comfort)

Drive program **C** is characterised by the following:

- the vehicle exhibits comfortable, economical driving characteristics.
- the vehicle pulls away more gently in forward and reverse gears unless the accelerator pedal is depressed fully.
- the vehicle has improved driving stability, e.g. on slippery road surfaces.
- optimal fuel consumption resulting from the automatic transmission shifting up sooner. The vehicle is driven in the low engine speed range and the wheels are less likely to spin.
- glide mode is not available.
- the ECO start/stop function is switched on (▷ page 157).

Drive program E (Economy)

Drive program **E** is characterised by the following:

- the vehicle exhibits particularly economical driving characteristics.
- the vehicle pulls away more gently in forward and reverse gears unless the accelerator pedal is depressed fully.
- the vehicle has improved driving stability, e.g. on slippery road surfaces.
- optimal fuel consumption resulting from the automatic transmission shifting up sooner. The vehicle is driven in the low engine speed range and the wheels are less likely to spin.
- during deceleration, the engine is disconnected from the drive train. The vehicle uses kinetic energy and consumes less fuel.
- the cooling and heating output of the climate control system has been reduced.
- glide mode is available.
- the ECO start/stop function is switched on (▷ page 157).

Mercedes-AMG C 63/C 63 S

Drive program RACE (S-MODEL)

The **RACE** drive program is characterised by the following:

- the vehicle exhibits driving characteristics suitable for the racetrack.
- all vehicle systems are set for maximum sportiness.
- the gearshift recommendation gives you information for slowly warming up the drive assemblies and for adopting a fuel-efficient driving style (▷ page 171). You can follow the gearshift recommendations at all times and shift gear accordingly using the steering wheel gearshift paddles. On the basis of the gearshift recommendation, using the steering wheel gearshift paddles, you can optimise the drive train and engine operating mode at any time.

- if you have selected a gear manually, this will be maintained until the vehicle speed significantly increases or decreases.
- the vehicle pulls away in first gear.
- the automatic transmission shifts up later. Fuel consumption may be higher as a result of the later automatic transmission shift points.
- the suspension exhibits particularly firm springing and damping settings.
- glide mode is not available.
- the ECO start/stop function is switched off (▷ page 157).

Drive program S+ (Sport Plus)

Drive program **S+** is characterised by the following:

- the vehicle exhibits particularly sporty driving characteristics.
- the vehicle pulls away in first gear.
- the automatic transmission shifts up later. Fuel consumption may be higher as a result of the later automatic transmission shift points.
- the suspension exhibits particularly firm springing and damping settings.
- glide mode is not available.
- the ECO start/stop function is switched off (▷ page 157).

Drive program S (Sport)

Drive program **S** is characterised by the following:

- the vehicle exhibits sporty driving characteristics.
- the vehicle pulls away in first gear.
- the automatic transmission shifts up later. Fuel consumption may be higher as a result of the later automatic transmission shift points.
- the suspension exhibits firm springing and damping settings.
- glide mode is not available.
- the ECO start/stop function is switched off (▷ page 157).

Drive program C (Comfort)

Drive program **C** is characterised by the following:

- the vehicle exhibits comfortable, economical driving characteristics.
- the vehicle pulls away more gently in forward and reverse gears unless the accelerator pedal is depressed fully.
- the vehicle has improved driving stability, e.g. on slippery road surfaces.
- optimal fuel consumption resulting from the automatic transmission shifting up sooner. The vehicle is driven in the low engine speed range and the wheels are less likely to spin.
- glide mode is available.
- the ECO start/stop function is switched on (▷ page 157).

Drive program I (Individual)

In drive program **I**, the following properties of the drive program can be selected:

- the drive (engine management)
  and therefore indirectly the availability of glide mode and the ECO start/stop function as well as the properties of the driver assistance systems
- the transmission management
- ESP® (▷ page 75)
- the suspension
  and therefore indirectly the steering
- activation of the exhaust flap

To permanently shift the gears manually in drive program **I** using the steering wheel gearshift paddles, select the **M** (Manual) setting for the transmission management.

Information on configuring drive program **I** with the multimedia system can be found under "DYNAMIC SELECT" in the vehicle's Digital Owner's Manual.

Manual gearshifting

General notes

You can shift gears yourself using the steering wheel gearshift paddles. The transmission must be in position D for this.

Depending on which steering wheel gearshift paddle is pulled, the automatic transmission

immediately shifts into the next gear up or down, if permitted.

To use manual gearshifting, you have two options:

- temporary setting
- permanent setting

If you activate manual gearshifting, the multifunction display will show the current gear and M instead of transmission position D.

If you deactivate manual gearshifting, the gears will be shifted automatically again.

Temporary setting



▶ **To activate:** shift the DIRECT SELECT lever to position D.

▶ Pull steering wheel gearshift paddle ① or ②.

The temporary setting will remain active for a certain amount of time. In certain conditions, the minimum amount of time is extended, e.g. in the case of lateral acceleration, overrun mode or driving on steep terrain.

▶ **To deactivate:** pull steering wheel gearshift paddle ② and hold it in place.

or

▶ Use the DIRECT SELECT lever to shift the transmission position.

or

▶ Use the DYNAMIC SELECT switch to change the drive program.

Permanent setting (except Mercedes-AMG vehicles)

When configuring drive program **I**, select the **M** (Manual) setting for the drive. When driving in drive program **I**, you permanently shift the gears manually using the steering wheel gearshift paddles.

Information on configuring drive program **I** with the multimedia system can be found under "DYNAMIC SELECT" in the vehicle's Digital Owner's Manual.

Permanent setting (Mercedes-AMG vehicles)

! In manual mode, the automatic transmission does not shift up automatically even when the engine limiting speed for the current gear is reached. When the engine limiting speed is reached, the fuel supply is cut to prevent the engine from overrevving. Always make sure that the engine speed does not reach the red area of the rev counter. There is otherwise a risk of engine damage.



▶ **To activate/deactivate:** shift the DIRECT SELECT lever to position D.

▶ Press button ①.
When the indicator lamp ② lights up, automatic transmission manual mode is activated. You then permanently shift the gears manually using the steering wheel gearshift paddles.

The manual mode activated with the ① button remains activated when the drive program is changed.

Mercedes-AMG C 63/C 63 S: only if the **D** (Automatic) setting has been preselected for the transmission is manual mode deactivated when you change to drive program **I**.

Mercedes-AMG C 63/C 63 S: you can also preset manual mode for drive program **I**. To do so, select the **M** (Manual) setting when configuring the transmission. When driving in drive program **I**, you permanently shift the gears manually using the steering wheel gearshift paddles.

Information on configuring drive program **I** with the multimedia system can be found under

"DYNAMIC SELECT" in the vehicle's Digital Owner's Manual.

Shifting gears



- **To shift up:** pull steering wheel gearshift paddle ②.
  The automatic transmission shifts up to the next gear.
  If the maximum engine speed in the gear currently engaged is reached and you continue to accelerate, the automatic transmission automatically shifts up in order to prevent engine damage (except Mercedes-AMG vehicles).
  Mercedes-AMG vehicles: if the temporary setting has been activated and you continue to accelerate when the maximum engine speed has been reached, the automatic transmission automatically shifts up. If the permanent setting has been activated, the automatic transmission does not shift up automatically even when the limiting speed of the engine is reached. It is essential to ensure protection against reaching the overrevving range on the multifunction display. Make sure that the engine speed does not reach the red area of the rev counter.
- **To shift down:** pull steering wheel gearshift paddle ①.
  The automatic transmission shifts down to the next gear.
  Automatic downshifting occurs when coasting.
  If the engine were to exceed the maximum engine speed when shifting down, the automatic transmission protects against engine damage by not shifting down.

Gearshift recommendation

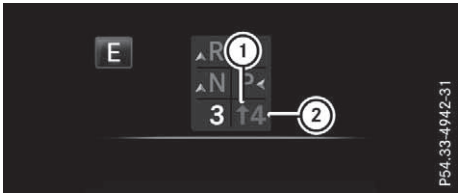

The gearshift recommendation assists you in adopting a fuel-efficient driving style. The recommended gear is shown on the multifunction display.

- When gearshift recommendation ① is shown on the multifunction display of the instrument cluster, shift to recommended gear ②.

Protection against reaching the overrevving range (Mercedes-AMG vehicles)

! In manual mode, the automatic transmission does not shift up automatically even when the engine limiting speed for the current gear is reached. When the engine limiting speed is reached, the fuel supply is cut to prevent the engine from overrevving. Always make sure that the engine speed does not reach the red area of the rev counter. There is otherwise a risk of engine damage.



Before the engine speed reaches the red area, an upshift indicator will be shown on the multifunction display.

- When message ① appears on the multifunction display, pull the right-hand steering wheel gearshift paddle.

Kickdown

- For maximum acceleration, depress the accelerator pedal beyond the pressure point. The automatic transmission shifts to a lower gear depending on the engine speed.
- Shift back up once the desired speed is reached.

If you apply full throttle, the automatic transmission shifts up to the next gear when the maximum engine speed is reached. This prevents the engine from overrevving.

Mercedes-AMG vehicles: kickdown is possible only in the temporary setting.

Problems with the transmission

Problem	Possible causes/consequences and ▶ Solutions
The transmission has problems shifting gear.	The transmission is losing oil. ▶ Have the transmission checked at a qualified specialist workshop immediately.
The acceleration ability is deteriorating. The transmission no longer shifts gear.	The transmission is in emergency mode. It is possible to shift to a gear and reverse gear only. ▶ Stop. ▶ Shift the transmission to position P. ▶ Switch off the engine. ▶ Wait at least ten seconds before restarting the engine. ▶ Shift the transmission to position D or R. If D is selected, the transmission only shifts to one gear; if R is selected, the transmission shifts to reverse gear. ▶ Have the transmission checked at a qualified specialist workshop immediately.

Transfer case

This section only applies to vehicles with all-wheel drive (4MATIC). The front and rear axles are constantly driven.

! Performance tests may only be carried out on a two-axle roller dynamometer. Otherwise, the braking system or the transfer case could be damaged. Contact a qualified specialist workshop for more information on performance tests.

! Since ESP® engages automatically, the ignition must be switched off (the key or Start/Stop button must be in position 0 or 1) if

- the electric parking brake is being tested using a dynamometer
- the vehicle is being towed with only one axle raised (not permitted for vehicles with 4MATIC).

Otherwise, the brake system can be damaged.

! Vehicles with 4MATIC must not be towed with the front or rear axle raised; otherwise, the transmission may be damaged.

Refuelling

Important safety notes

⚠ **WARNING**

Fuel is highly flammable. If you handle fuel incorrectly, there is a risk of fire and explosion.

You must avoid fire, naked flames, creating sparks and smoking. Switch off the engine and, if applicable, the auxiliary heating before refuelling.

⚠ **WARNING**

Fuels are poisonous and hazardous to health. There is a danger of injury.

Do not swallow fuel or let it come into contact with skin, eyes or clothing. Do not inhale fuel vapours. Keep fuels out of the reach of children.

If you or others come into contact with fuel, observe the following:

- Wash the fuel off any affected areas of skin with water and soap immediately.
- If you get fuel in your eyes, rinse them thoroughly with clean water immediately. Seek immediate medical attention.
- If fuel is swallowed, seek immediate medical attention. Do not induce vomiting.
- Change any clothing that has come into contact with fuel immediately.

⚠ WARNING

Electrostatic charge can cause sparks and thereby ignite fuel vapours. There is a risk of fire and explosion.

Always touch the vehicle body before opening the fuel filler flap or touching the fuel pump nozzle. This discharges any electrostatic charge that may have built up.

Do not get back into the vehicle during the refuelling process, otherwise electrostatic charge could build up again.

⚠ WARNING

Vehicles with a diesel engine:

If you mix diesel fuel with petrol, the flash point of this fuel mixture is lower than that of pure diesel fuel. When the engine is running, components in the exhaust system may overheat unnoticed. There is a risk of fire.

Never refuel with petrol. Never add petrol to diesel fuel.

! Do not use diesel to refuel vehicles with a petrol engine. Do not switch on the ignition if you accidentally refuel with the wrong fuel. Otherwise, the fuel will enter the fuel system. Even small amounts of the wrong fuel can result in damage to the fuel system and the engine. Notify a qualified specialist workshop and have the fuel tank and fuel lines drained completely.

! Do not use petrol to refuel vehicles with a diesel engine. Do not switch on the ignition if you accidentally refuel with the wrong fuel. Otherwise, fuel can enter the fuel system. Even small amounts of the wrong fuel could result in damage to the fuel system and the engine. The repair costs are high. Notify a qualified specialist workshop and have the fuel tank and fuel lines drained completely.

! Overfilling the fuel tank could damage the fuel system.

! Take care not to spill any fuel on painted surfaces. You could otherwise damage the paintwork.

! Use a filter when adding fuel from a fuel can. The fuel lines and/or the fuel injection system could otherwise be blocked by particles from the fuel can.

If you overfill the fuel tank, some fuel may spray out when you remove the fuel pump nozzle.

Further information on fuel and fuel quality (▷ page 395).

Refuelling

General information

Observe the important safety notes (▷ page 174).

If you unlock/lock the vehicle from the outside, the fuel filler flap also unlocks/locks.

The position of the ⛽ fuel filler cap is displayed on the instrument cluster. The arrow next to the filling pump indicates the side of the vehicle.

Opening the fuel filler flap

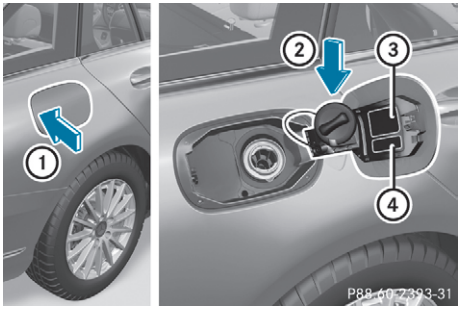

① Opening the fuel filler flap
② Insert the fuel filler cap
③ Tyre pressure table
④ Instruction label on the fuel type to be refuelled

▶ Switch off the engine.
▶ Remove the key from the ignition lock.

or, on vehicles with KEYLESS-GO start function or KEYLESS-GO:

▶ Open the driver's door.
The vehicle electronics are now in position 0. This is the same as the key having been removed.

▶ Press the fuel filler flap in the direction of arrow ①.
The fuel filler flap swings open.
▶ Turn the fuel filler cap anti-clockwise and remove it.
▶ Insert the fuel filler cap into the holder on the inside of fuel filler flap ②.
▶ Completely insert the filler neck of the fuel pump nozzle into the tank, hook in place and refuel.
▶ Fill the tank only until the pump nozzle switches off.

Do not add any more fuel after the pump stops filling for the first time. Otherwise, fuel may leak out.

Vehicles with a diesel engine: the filler neck is designed for refuelling at diesel filling pumps.

Closing the fuel filler flap

▶ Replace the cap on the filler neck and turn clockwise until it engages audibly.
▶ Close the fuel filler flap.

Close the fuel filler flap before locking the vehicle.

Problems with the fuel and fuel tank

Problem	Possible causes/consequences and ▶ Solutions
Fuel is leaking from the vehicle.	⚠ **WARNING** The fuel line or the fuel tank is faulty. There is a risk of fire or explosion. ▶ Apply the electric parking brake. ▶ Switch off the engine. ▶ Remove the key from the ignition lock. or, on vehicles with KEYLESS-GO start function or KEYLESS-GO: ▶ Open the driver's door. The vehicle electronics are now in setting 0. This is the same as "key removed". ▶ Do not restart the engine under any circumstances. ▶ Consult a qualified specialist workshop.
The engine does not start.	The fuel tank of a vehicle with a diesel engine has been run completely dry. ▶ Refuel the vehicle with at least 5 l of diesel. ▶ Turn the ignition on for approximately ten seconds (▷ page 153). ▶ Start the engine continuously for a maximum of ten seconds until it runs smoothly. If the engine does not start: ▶ Turn the ignition on again for approximately ten seconds (▷ page 153). ▶ Start the engine again continuously for a maximum of ten seconds until it runs smoothly. If the engine does not start after three attempts: ▶ Consult a qualified specialist workshop.
The fuel filler flap cannot be opened.	The fuel filler flap is not unlocked. ▶ Unlock the vehicle (▷ page 86).
	The key battery is weak or discharged. ▶ Unlock the vehicle using the emergency key element (▷ page 87).
	The fuel filler flap is unlocked, but the opening mechanism is jammed. ▶ Consult a qualified specialist workshop.

AdBlue® (BlueTEC vehicles only)

General notes

To function properly, BlueTEC exhaust gas aftertreatment must be operated with the reducing agent AdBlue®.

On vehicles with an 8.5 l AdBlue® tank, topping up AdBlue® is not part of the maintenance work.

When the supply of AdBlue® is down to approximately 4.3 l, the `Refill AdBlue See Owner's Manual` message is shown on the multifunction display.

If you drive the vehicle at a speed greater than 15 km/h after topping up, the Refill AdBlue See Owner's Manual message disappears after approximately one minute.

When the AdBlue® supply drops to a minimum, the Refill AdBlue No start in ... mi message is shown on the multifunction display.

When the Refill AdBlue No start in ... mi message is shown on the multifunction display, you can still drive the vehicle over the distance shown. If AdBlue® is not topped up, you will subsequently be **unable to start the engine**. If the Refill AdBlue Start not possible message appears on the multifunction display and the engine no longer starts, you must top up AdBlue®.

▶ Add at least 4.0 l of AdBlue®.
▶ Switch on the ignition for at least 60 seconds.
▶ Start the engine.

ⓘ You can also have the AdBlue® tank refilled at a qualified specialist workshop.

Before driving your vehicle outside Europe, have the AdBlue® supply checked at a qualified specialist workshop.

Further information about BlueTEC exhaust gas aftertreatment and about AdBlue® can be obtained from any Mercedes-Benz Service Centre.

Important safety notes

AdBlue® is a water-soluble fluid for the exhaust gas aftertreatment of diesel engines. It is:

- non-toxic
- colourless and odourless
- non-flammable

If you open the AdBlue® tank, small amounts of ammonia vapour may be released.

Ammonia vapours have a pungent odour and are particularly irritating to the skin, mucous membranes and eyes. You may experience a burning sensation in your eyes, nose and throat. You may also experience coughing and watery eyes.

Do not inhale any ammonia vapours that may be released. Fill the AdBlue® tank only in well-ventilated areas.

Do not swallow AdBlue® or let it come into contact with skin, eyes or clothing. Keep AdBlue® away from children.

If you or others come into contact with AdBlue®, observe the following:

- immediately rinse AdBlue® off your skin with soap and water
- if AdBlue® comes into contact with your eyes, immediately rinse them thoroughly with clean water and seek medical attention immediately
- if AdBlue® is swallowed: immediately rinse your mouth out thoroughly, drink plenty of water, seek medical attention immediately
- immediately change out of clothing that has come into contact with AdBlue®

! Only use AdBlue® in accordance with ISO 22241. Do not mix any additives with AdBlue®, and do not dilute AdBlue® with water. This may destroy the BlueTEC exhaust gas aftertreatment system.

! In order to fill the AdBlue® tank, the vehicle must be parked on a level surface. The AdBlue® tank can only be filled as intended with the vehicle parked on a level surface. Fluctuations in capacity will thus be avoided. Filling a vehicle standing on an uneven surface is not permitted. There is a danger of overfilling, which can cause damage to BlueTEC exhaust gas aftertreatment components.

! Surfaces which have come into contact with AdBlue® while refilling should be rinsed immediately with water, or remove AdBlue® with a moist cloth and cold water. If AdBlue® has already crystallised, use a sponge and cold water to clean the area. AdBlue® residue crystallises after a certain amount of time and soils the affected surfaces.

! AdBlue® is not a fuel additive and must not be added to the fuel tank. If AdBlue® is added to the fuel tank, this can lead to engine damage.

Have the AdBlue® tank refilled at a qualified specialist workshop. However, you can also top up the AdBlue® tank:

- at a filling station with an AdBlue® filling pump
- with AdBlue® refill bottles
- with an AdBlue® refill canister

When the pump nozzle switches off automatically during filling at a filling pump, the AdBlue® tank has been completely filled. Do not fill the

AdBlue® tank any further. AdBlue® may leak out.

To avoid transporting already opened refill containers in the vehicle, completely empty refill bottles or canisters when filling the AdBlue® tank, if possible.

Further information on AdBlue® (▷ page 399).

Opening/closing the AdBlue® filler cap

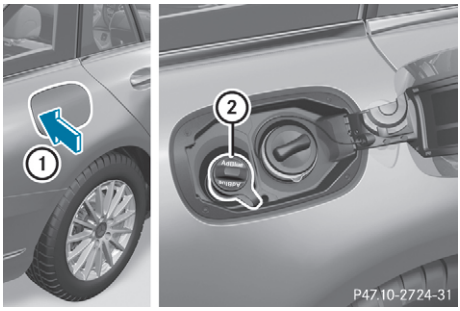

- ▶ **To open:** switch the ignition off.
- ▶ Press the fuel filler flap in the direction of arrow ①.
  The fuel filler flap swings open.
- ▶ Turn blue AdBlue® filler cap ② anti-clockwise and remove it.
  AdBlue® filler cap ② is secured with a plastic strip.
- ▶ **To close:** fit AdBlue® filler cap ② onto the filler neck and turn it clockwise.
- ▶ To close the fuel filler flap, press it in the direction of arrow ①.
- ▶ Drive at a speed greater than 15 km/h.
  The `Refill AdBlue See Owner's Manual` message disappears after approximately one minute.

If the `Refill AdBlue See Owner's Manual` message continues to be shown on the multifunction display, you must top up with more AdBlue®.

ⓘ The fuel filler flap is unlocked or locked automatically when you unlock or lock the vehicle.

AdBlue® refill canisters

❗ Do not tighten the disposable hose too firmly. The disposable hose could otherwise be damaged and AdBlue® may leak out.

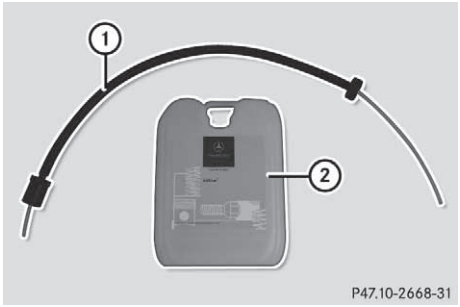

- ▶ Unscrew the cap from the opening on top of AdBlue® refill canister ②.
- ▶ Place disposable hose ① on the opening of AdBlue® refill canister ② and screw it on clockwise until hand-tight.
  Disposable hose ① remains closed until you fasten disposable hose ① to the AdBlue® filler neck of the vehicle.

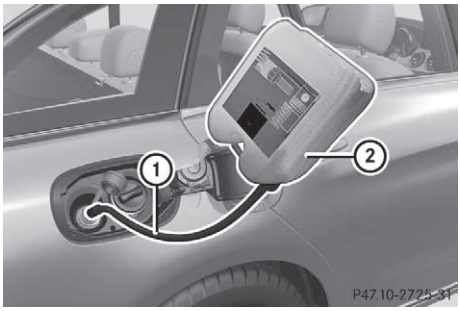

- ▶ Place disposable hose ① on the filler neck on the vehicle and screw it on clockwise until hand-tight. When you feel resistance, disposable hose ① is sufficiently secured.
- ▶ Lift up and tip AdBlue® refill canister ②.
  Filling stops when the AdBlue® tank is completely filled. Do not fill the AdBlue® tank any further. AdBlue® refill canister ② can be removed when it has been only partially emptied.
- ▶ Turn disposable hose ① on the filler neck of the vehicle anti-clockwise and remove it.
- ▶ Turn disposable hose ① on the opening of AdBlue® refill canister ② anti-clockwise and remove it.
- ▶ Reseal AdBlue® refill canister ② with the cap.

AdBlue® refill canisters are available at many filling stations or at a qualified specialist work-

shop. AdBlue® refill canisters are often sold with a filler hose. A filler hose that does not exactly fit the vehicle's AdBlue® tank offers no overfill protection. AdBlue® may leak out as a result of overfilling. Mercedes-Benz offers a special disposable hose with overfill protection. You can obtain this from any Mercedes-Benz Service Centre. AdBlue® is available in a variety of containers and receptacles. Use the disposable hose with only the Mercedes-Benz AdBlue® refill canisters.

AdBlue® refill bottle

! Only screw on the AdBlue® refill bottle so that it is hand-tight. Otherwise, the thread of the AdBlue® refill bottle could be damaged and AdBlue® could leak out.

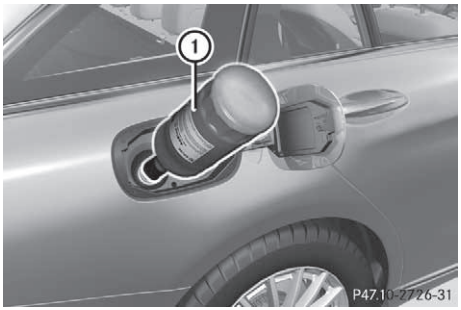

- ▶ Unscrew the protective cap from AdBlue® refill bottle ①.
- ▶ Place AdBlue® refill bottle ① on the filler neck as shown and screw it on clockwise until hand-tight.
- ▶ Press AdBlue® refill bottle ① towards the filler neck.
  The AdBlue® tank is filled. This could take up to one minute.
  When AdBlue® refill bottle ① is no longer pressed, filling stops and the bottle may be removed again after being only partially emptied.
- ▶ Release AdBlue® refill bottle ①.
- ▶ Turn AdBlue® refill bottle ① anti-clockwise and remove it.
- ▶ Screw the protective cap onto AdBlue® refill bottle ① again.

AdBlue® refill bottles are available at many filling stations or at a qualified specialist workshop. Refill bottles without a threaded seal offer no overfill protection. AdBlue® may leak out as a result of overfilling. Mercedes-Benz offers special refill bottles with a threaded cap. These are available at any Mercedes-Benz Service Centre.

Parking

Important safety notes

⚠ WARNING

Flammable material such as leaves, grass or twigs may ignite if they come into contact with hot parts of the exhaust system or exhaust gas flow. There is a risk of fire.

Park the vehicle so that no flammable material can come into contact with hot vehicle components. In particular, do not park on dry grassland or harvested grain fields.

⚠ WARNING

If you leave children unattended in the vehicle, they may be able to set the vehicle in motion if, for example, they:

- release the parking brake
- shift the automatic transmission out of park position **P** or shift manual transmission into neutral
- start the engine

In addition, they may operate vehicle equipment and become trapped. There is a risk of an accident and injury.

When leaving the vehicle, always take the key with you and lock the vehicle. Never leave children unattended in the vehicle.

! Always secure the vehicle correctly against rolling away. Otherwise, the vehicle or its drivetrain could be damaged.

To ensure that the vehicle is safeguarded against rolling away unintentionally:

- the electric parking brake must be applied
- on vehicles with manual transmission, engage first gear or reverse gear
- on vehicles with automatic transmission, the transmission must be in position P and the key must be removed

- the front wheels must be turned towards the kerb on steep uphill or downhill gradients
- an empty vehicle must be secured at the front axle with a wheel chock or similar object, for example, on uphill or downhill gradients
- on uphill or downhill gradients a laden vehicle must also be secured at the rear axle with a wheel chock or similar object, for example

Switching off the engine

Important safety notes

⚠ WARNING

The automatic transmission switches to neutral position **N** when you switch off the engine. The vehicle may roll away. There is a risk of an accident.

After switching off the engine, always switch to parking position **P**. Prevent the parked vehicle from rolling away by applying the parking brake.

Vehicles with manual transmission

- ▶ Shift to either first gear or reverse gear R.
- ▶ Turn the key to position 0 in the ignition lock and remove it.
  The immobiliser is activated.
- ▶ Apply the electric parking brake.

Vehicles with automatic transmission

- ▶ Apply the electric parking brake.
- ▶ Shift the transmission to position P.
- ▶ **With the key:** turn the key to position 0 in the ignition lock and remove it.
  The immobiliser is activated.
- ▶ **With the Start/Stop button:** press the Start/Stop button (▷ page 154).
  The engine stops and all the indicator lamps on the instrument cluster go out.

  When the driver's door is closed, this corresponds to key position 1. When the driver's door is open, this corresponds to key position 0, "key removed".

If you switch the engine off with the transmission in position R or D, the automatic transmission shifts to N automatically.

With the key: if you then open the driver's door or the front-passenger door or remove the key from the ignition, the automatic transmission shifts to P automatically.

With the Start/Stop button: if you then open the driver's door or the front-passenger door, the automatic transmission shifts to P automatically.

If you want the automatic transmission to remain in neutral N, e.g. when having the vehicle cleaned in an automatic car wash with a towing system:

- ▶ **Vehicles with KEYLESS-GO or KEYLESS-GO start function:** remove the Start/Stop button from the ignition lock.
- ▶ Insert the key into the ignition lock.
- ▶ **All vehicles:** switch the ignition on.
- ▶ Depress the brake pedal and keep it depressed.
- ▶ Engage neutral N.
- ▶ Release the brake pedal.
- ▶ Release the electric parking brake.
- ▶ Switch off the ignition and leave the key in the ignition lock.

The engine can be switched off while the vehicle is in motion by pressing and holding the Start/Stop button for about three seconds. This function operates independently of the ECO start/stop automatic engine switch-off function.

Electric parking brake

General notes

⚠ WARNING

If you leave children unattended in the vehicle, they may be able to set the vehicle in motion if, for example, they:

- release the parking brake
- shift the automatic transmission out of park position **P** or shift manual transmission into neutral
- start the engine

In addition, they may operate vehicle equipment and become trapped. There is a risk of an accident and injury.

When leaving the vehicle, always take the key with you and lock the vehicle. Never leave children unattended in the vehicle.

The function of the electric parking brake is dependent on the on-board voltage. If the on-board voltage is low or the system is malfunctioning, it may not be possible to apply the released parking brake.

- ▶ If this is the case, park the vehicle on level ground only and secure it to prevent it from rolling away.
- ▶ **Vehicles with manual transmission:** engage first gear.

It may not be possible to release an applied parking brake if the on-board voltage is low or if there is a malfunction in the system. Contact a qualified specialist workshop.

The electric parking brake carries out a function check at regular intervals when the engine is switched off. Noises that occur are normal.

Applying or releasing manually



- ▶ **To apply:** push handle ①.
  When the electric parking brake is applied, the red (P) indicator lamp lights up on the instrument cluster.
  The electric parking brake can also be applied when the key is removed.
- ▶ **To release:** pull handle ①.
  The red (P) indicator lamp on the instrument cluster goes out.

The electric parking brake can be released only:

- if the key is in position 1 or 2 in the ignition lock (▷ page 153) or
- if the ignition was switched on using the Start/Stop button

Applying automatically (vehicles with automatic transmission)

The electric parking brake is automatically applied when the transmission is in position P and

- the engine is switched off or
- the driver is not wearing a seat belt and the driver's door is opened

To prevent the electric parking brake from being applied automatically, pull handle ①.

The electric parking brake is also applied automatically if:

- Distance Pilot DISTRONIC brings the vehicle to a standstill or
- the HOLD function is keeping the vehicle stationary or
- Parking Pilot is keeping the vehicle stationary

In addition, at least one of the following conditions must be fulfilled:

- the engine is switched off
- the driver is not wearing a seat belt and the driver's door is opened
- there is a system malfunction
- the power supply is insufficient
- the vehicle is stationary for a lengthy period

The red (P) indicator lamp on the instrument cluster lights up.

The electric parking brake is not automatically applied if the engine is switched off by the ECO start/stop function.

Applying automatically (vehicles with manual transmission)

The electric parking brake is applied automatically when the vehicle is being kept stationary by the HOLD function.

In addition, at least one of the following conditions must be fulfilled:

- the engine is switched off
- the driver is not wearing a seat belt and the driver's door is open
- there is a system malfunction
- the power supply is insufficient
- the vehicle is stationary for a lengthy period

The red (P) indicator lamp on the instrument cluster lights up.

The electric parking brake is not automatically applied if the engine is switched off by the ECO start/stop function.

Releasing automatically

The electric parking brake of your vehicle is released automatically when all the following conditions are fulfilled:

- the seat belt is fastened
- the engine is running
- **vehicles with automatic transmission:** you accelerate and the transmission is in position D or R

  or

  you shift the transmission position from P to position D or R, you will need to accelerate more on steeper gradients
- **vehicles with manual transmission:** a gear has been selected and you depress the accelerator pedal

Vehicles with automatic transmission: if the transmission is in position R, the trunk lid must be closed.

Vehicles with manual transmission: when reverse gear R is engaged, the tailgate must be closed.

If your seat belt is not fastened, the following conditions must be fulfilled for the electric parking brake to be released automatically:

- the driver's door is closed
- **vehicles with automatic transmission:** you are shifting from transmission position P or have previously driven at speeds greater than 3 km/h
- **vehicles with manual transmission:** you have previously driven at speeds greater than 3 km/h

Ensure that you do not depress the accelerator pedal unintentionally. Otherwise, the parking brake will be released and the vehicle will start to move.

Emergency braking

The vehicle can also be braked during an emergency by using the electric parking brake.

▶ While driving, push handle ① of the electrical parking brake (▷ page 182).
The vehicle is braked as long as you keep handle ① of the electric parking brake depressed. The longer electric parking brake handle ① is depressed, the greater the braking force.

During braking:

- a warning tone sounds
- the `Release parking brake` display message appears
- the red (P) indicator lamp on the instrument cluster flashes

When the vehicle has been braked to a standstill, the electric parking brake is applied.

Parking up the vehicle

If you leave the vehicle parked up for longer than four weeks, the battery may be damaged by exhaustive discharging.

If you leave the vehicle parked up for longer than six weeks, it may suffer from lack of use.

▶ Contact a qualified specialist workshop and seek advice.

ⓘ You can obtain information on trickle chargers from a qualified specialist workshop.

Hybrid vehicles: be sure to observe the notes in the supplement. Otherwise, you may fail to recognise dangers.

Driving tips

General driving tips

Important safety notes

⚠ WARNING

If you switch off the ignition while driving, safety-relevant functions are only available with limitations, or not at all. This could affect, for example, the power steering and the brake boosting effect. You will require considerably more effort to steer and brake. There is a risk of an accident.

Do not switch off the ignition while driving.

Drive sensibly – save fuel

Observe the following tips to save fuel:

- The tyres should always be inflated to the recommended tyre pressure.
- Remove unnecessary loads.
- Remove roof racks when they are not needed.
- Warm up the engine at low engine speeds.
- Avoid frequent acceleration or braking.
- Have all maintenance work carried out as indicated by the service intervals in the Service Booklet or by the service interval display.

Fuel consumption also increases when driving in cold weather, in stop-start traffic, on short journeys and in hilly terrain.

ECO display

The ECO display shows you how economical your driving style is. The ECO display assists you in achieving the most economical driving style for the selected settings and prevailing conditions. Consumption can be significantly influenced by your driving style.

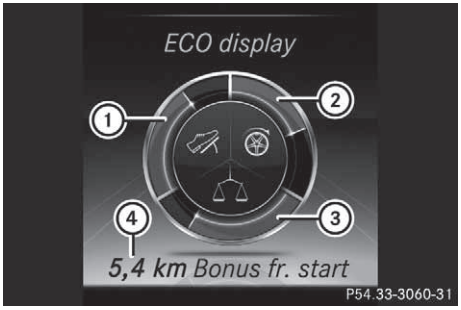

① Acceleration
② Coasting
③ Constant
④ Additional range achieved

Range ④ is shown under Bonus fr. start and represents the additional range achieved since the beginning of the journey as a result of an adapted driving style.

If the fuel level has dropped into the reserve range, the Reserve fuel display message is shown instead of range ④ on the multifunction display. In addition, warning lamp ⛽ on the instrument cluster lights up (▷ page 302).

The ECO display consists of three sections, with an inner and outer area. The sections correspond to the following three categories:

①	**Acceleration** (evaluation of all acceleration processes): • The outer area fills up and the inner area lights up green: moderate acceleration, especially at higher speeds. • The outer area empties and the inner area is grey: sporty acceleration.
②	**Coasting** (evaluation of all deceleration processes): • The outer area fills up and the inner area lights up green: anticipatory driving, keeping your distance and early release of the accelerator. The vehicle can coast without use of the brakes. • The outer area empties and the inner area is grey: frequent heavy braking.
③	**Constant** (continuous evaluation over the entire journey): • The outer area fills up and the inner area lights up green: constant speed and avoidance of unnecessary acceleration and deceleration. • The outer area empties and the inner area is grey: fluctuations in speed.

The three inner areas display the current driving style and light up green as a result of a particularly economical driving style. Depending on the driving situation, up to two areas may light up simultaneously.

At the beginning of the journey, the three outer areas are empty and fill up as a result of economical driving. A higher level indicates a more economical driving style. If the three outer areas are completely filled at the same time, the driver has adopted the most economical driving style for the selected settings and prevailing conditions. The ECO display border lights up.

The ECO display does not indicate the actual fuel consumption. The additionally achieved range

displayed under Bonus fr. start does not indicate a fixed consumption reduction.

In addition to driving style, the actual consumption is affected by other factors, such as:

- load
- tyre pressure
- cold start
- choice of route
- the use of electrical consumers

These factors are not included on the ECO display.

An economical driving style involves driving at a moderate engine speed.

To achieve a higher value in the categories "Acceleration" and "Constant":

- observe the gearshift recommendation.
- drive the vehicle in drive program **E** (vehicles with DYNAMIC SELECT switch)

On long journeys at a constant speed, e.g. on the motorway, only the outer area for "Constant" will change.

The ECO display summarises the driving style from the start of the journey to its completion. Therefore, there are more marked changes in the outer areas at the start of a journey. During a prolonged driving time, these changes are smaller. For more marked changes, perform a manual reset (▷ page 247).

Further information on the ECO display (▷ page 246).

Brakes

Important safety notes

⚠ WARNING

If you shift down on a slippery road surface in an attempt to increase the engine's braking effect, the drive wheels could lose their grip. This increases the risk of skidding and having an accident.

Do not shift down for additional engine braking on a slippery road surface.

Downhill gradients

Shift to a lower gear in good time on long and steep downhill gradients. Take particular note of this when driving a laden vehicle and when towing a trailer.

This also applies when cruise control, Distance Pilot DISTRONIC or the speed limiter are activated.

This will use the braking effect of the engine, so less braking will be required to maintain the vehicle speed. This relieves the load on the brake system and prevents the brakes from overheating and wearing too quickly.

Heavy and light loads

⚠ WARNING

The braking system can overheat if you leave your foot on the brake pedal while driving. This increases the braking distance and could even cause the braking system to fail. There is a risk of an accident.

Never use the brake pedal as a footrest. Do not simultaneously depress both the brake pedal and the accelerator pedal while driving.

! Depressing the brake pedal constantly results in excessive and premature wear to the brake pads.

If heavy demands are made on the brakes, do not park the vehicle immediately. Drive on for a short while. This allows the airflow to cool the brakes more quickly.

If the brakes have been used only moderately, you should occasionally test their effectiveness. To do this, brake more firmly from a higher speed while paying attention to the traffic conditions. This improves the grip of the brakes.

Wet road surfaces

If you have driven for a long time in heavy rain without braking, there may be a delayed reaction from the brakes when braking for the first time. This may also occur after a car wash or after driving through deep water.

You will have to depress the brake pedal more firmly. Maintain a greater distance to the vehicle in front.

After driving on a wet road or having the vehicle washed, brake firmly while paying attention to the traffic conditions. This will warm up the brake discs, thereby drying them more quickly and protecting them against corrosion.

Limited braking performance on salt-treated roads

If you drive on salt-treated roads, a layer of salt may form on the brake discs and pads. This can increase the braking distance considerably.

- In order to prevent any salt build-up, apply the brakes occasionally while paying attention to the traffic conditions.
- Carefully depress the brake pedal at the end of the journey and when starting the next journey.
- Maintain a much greater distance to the vehicle in front.

New brake discs and brake pads/linings

Brake pads/linings and discs that are either new or have been replaced achieve optimum braking effect only after several hundred kilometres of driving. Compensate for the reduced braking effect by applying greater force to the brake pedal.

For safety reasons, Mercedes-Benz recommends only fitting the following brake discs and brake pads/linings:

- brake discs that have been approved by Mercedes-Benz
- brake pads/linings that have been approved by Mercedes-Benz or that are of an equivalent standard of quality

Other brake discs or brake pads/linings can compromise the safety of your vehicle.

Always replace all brake discs and brake pads/linings on an axle at the same time. Always fit new brake pads/linings when replacing brake discs.

The vehicle is equipped with lightweight brake discs to which the wheel assembly with rim and threaded connection is matched.

The use of brake discs other than those approved by Mercedes-Benz may alter track width and is subject to approval, if applicable.

Shock-type loads when handling the brake discs, such as when changing wheels, can lead to a reduction in comfort when driving with lightweight brake discs. Avoid shock-type loads on the lightweight brake discs, particularly on the brake plate.

High-performance and ceramic brakes (Mercedes-AMG vehicles)

The AMG brake systems are designed for heavy loads. This may lead to noise when braking. This is dependent on:

- speed
- braking force
- environmental conditions, such as temperature and humidity

The wear of individual brake system components such as the brake pads/linings or brake discs depends on individual driving style and operating conditions.

For this reason, it is impossible to state a mileage (service life) that will be valid under all circumstances. An aggressive driving style will lead to high wear. You can obtain more information on this from a qualified specialist workshop.

Brake pads/linings and discs that either are new or have been replaced achieve optimum braking effect only after several hundred kilometres of driving. Compensate for the reduced braking effect by applying greater force to the brake pedal. Always be aware of this and adapt your driving and braking accordingly during the running-in period.

Excessive heavy braking results in correspondingly high brake wear. If the brake pads/linings have reached their wear limit, the multifunction display shows a corresponding message. If you regularly drive at high speeds, it is particularly important to have the brake system checked and maintained regularly.

Driving on wet roads

Aquaplaning

If water has accumulated to a certain depth on the road surface, there is a danger of aquaplaning occurring, even if:

- you are driving at low speeds
- the tyres have adequate tread depth

For this reason, drive in the following manner in the event of heavy rain or in conditions in which aquaplaning can occur:

- lower your speed
- avoid tyre ruts

- avoid sudden steering movements
- brake carefully

Driving on flooded roads

! Bear in mind that vehicles travelling in front or in the opposite direction create waves. This may cause the maximum permissible water depth to be exceeded.

These notes must be observed under all circumstances. You could otherwise damage the engine, the electronics or the transmission.

If you must drive on stretches of road on which water has collected, please bear in mind that:

- in the case of standing water, the water level must be no higher than the lower edge of the vehicle body
- you should drive no faster than walking pace

Winter driving

⚠ WARNING

If you shift down on a slippery road surface in an attempt to increase the engine's braking effect, the drive wheels could lose their grip. This increases the risk of skidding and having an accident.

Do not shift down for additional engine braking on a slippery road surface.

⚠ DANGER

If the exhaust pipe is blocked or adequate ventilation is not possible, poisonous gases such as carbon monoxide (CO) may enter the vehicle. This is the case, e.g. if the vehicle becomes trapped in snow. There is a risk of fatal injury.

If you leave the engine or the auxiliary heating running, make sure the exhaust pipe and area around the vehicle are clear of snow. To ensure an adequate supply of fresh air, open a window on the side of the vehicle that is not facing into the wind.

Have your vehicle winterproofed at a qualified specialist workshop at the onset of winter.

You should drive particularly carefully on slippery road surfaces. Avoid sudden acceleration, steering and braking manoeuvres. Do not use cruise control or Distance Pilot DISTRONIC.

If the vehicle threatens to skid or cannot be stopped when moving at low speed:

- ▶ **Vehicles with manual transmission:** shift to neutral.
- ▶ **Vehicles with automatic transmission:** shift the transmission to position N.
- ▶ Try to bring the vehicle under control by using corrective steering.

The outside temperature indicator is not designed to serve as an ice-warning device and is therefore unsuitable for that purpose. Changes in the outside temperature are displayed after a short delay.

Indicated temperatures just above the freezing point do not guarantee that the road surface is free of ice. The road may still be icy, especially in wooded areas or on bridges. The vehicle could skid if you fail to adapt your driving style. Always adapt your driving style and drive at a speed to suit the prevailing weather conditions.

You should pay special attention to road conditions when temperatures are around freezing point.

Further information on driving with snow chains, see (▷ page 378).

Further information on driving with summer tyres (▷ page 377).

Observe the notes in the "Winter operation" section (▷ page 377).

Driving systems

Mercedes-Benz Intelligent Drive

Mercedes-Benz Intelligent Drive stands for innovative driver assistance and safety systems which enhance comfort and support the driver in critical situations. With these intelligent co-ordinated systems Mercedes-Benz has set a milestone on the path towards autonomous driving.

Mercedes-Benz Intelligent Drive embraces all elements of active and passive safety in one well thought-out system – for the safety of the vehicle occupants and that of other road users.

Further information on driving safety systems (▷ page 72).

Cruise control

General notes

Cruise control maintains a constant road speed for you. It brakes automatically in order to avoid exceeding the set speed. Shift to a lower gear in good time on long and steep downhill gradients. Take particular note of this when driving a laden vehicle and when towing a trailer. By doing so, you will make use of the braking effect of the engine. This relieves the load on the brake system and prevents the brakes from overheating and wearing too quickly.

Use cruise control only if road and traffic conditions are appropriate for maintaining a steady speed for a prolonged period. You can store any road speed above 30 km/h. If you have set a permanent limit speed, you cannot set the speed any higher than the fixed limit speed (▷ page 191).

Important safety notes

Cruise control can neither reduce the risk of an accident if you fail to adapt your driving style nor override the laws of physics. Cruise control cannot take into account road, weather or traffic conditions. Cruise control is only an aid. You are responsible for maintaining a safe distance from the vehicle in front, for vehicle speed, for braking in good time and for staying in lane.

Do not use cruise control:

- in road and traffic conditions that do not allow you to maintain a constant speed, e.g. in heavy traffic or on winding roads.
- on smooth or slippery roads. Braking or accelerating can cause the drive wheels to lose traction and the vehicle could then skid.
- when there is poor visibility, e.g. due to fog, heavy rain or snow.

If there is a change of drivers, advise the new driver of the speed stored.

ⓘ The speed indicated in the speedometer may differ slightly from the speed stored.

Cruise control lever

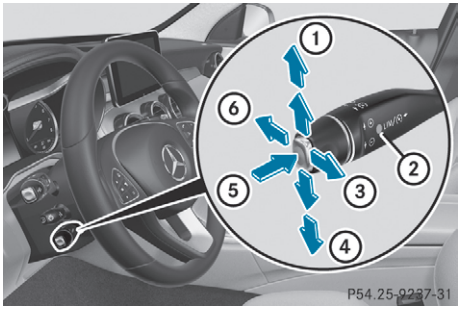

① Store the current speed or a higher speed
② LIM indicator lamp
③ Stores the current speed or recalls the last stored speed
④ Stores the current speed or a lower speed
⑤ Switches between cruise control and the variable speed limiter
⑥ Deactivates cruise control

You can operate cruise control and the variable speed limiter with the cruise control lever.

The LIM indicator lamp on the cruise control lever indicates which system you have selected:

- **LIM indicator lamp off:** cruise control is selected
- **LIM indicator lamp on:** variable limiter is selected

When you activate cruise control, the stored speed is shown on the multifunction display for five seconds. The symbol appears on the multifunction display.

Speedometer with segments: when cruise control is activated, the segments of the stored speed to the end of the scale or to a permanently set speed limit light up.

Selecting cruise control

▶ Check whether LIM indicator lamp ② is off.
If it is off, cruise control is already selected.
If it is not, press the cruise control lever in the direction of arrow ⑤.
LIM indicator lamp ② in the cruise control lever goes out. Cruise control is selected.

Storing and maintaining the current speed

You can store the current speed if you are driving at a speed greater than 30 km/h.

- ▶ Accelerate the vehicle to the desired speed.
- ▶ Briefly press the cruise control lever up ① or down ④.
- ▶ Remove your foot from the accelerator pedal. Cruise control is activated. The vehicle automatically maintains the speed.

ⓘ Cruise control may be unable to maintain the stored speed on uphill gradients. The stored speed is resumed when the gradient evens out. Cruise control maintains the stored speed on downhill gradients by automatically braking the vehicle.

ⓘ Vehicles with manual transmission:

- Always drive at adequate, but not excessive, engine speeds.
- Change gear in good time.
- If possible, do not change down several gears at a time.

Storing the current speed or calling up the last stored speed

⚠ **WARNING**

If you call up the stored speed and it is lower than the current speed, the vehicle decelerates. If you do not know the stored speed, the vehicle could decelerate unexpectedly. There is a risk of an accident.

Pay attention to the road and traffic conditions before calling up the stored speed. If you do not know the stored speed, store the desired speed again.

- ▶ Briefly pull the cruise control lever towards you ③.
- ▶ Remove your foot from the accelerator pedal. The first time cruise control is activated, it stores the current speed or regulates the speed of the vehicle to the previously stored speed.

Setting a speed

Bear in mind that it may take a brief moment until the vehicle has accelerated or braked to the set speed.

- ▶ Press the cruise control lever up ① for a higher speed or down ④ for a lower speed.
- ▶ Keep the cruise control lever pressed until the desired speed is reached.
- ▶ Release the cruise control lever. The new speed is stored.
- ▶ **To adjust the set speed in 1 km/h increments:** briefly press the cruise control lever up ① or down ④ to the pressure point. The last stored speed increases or decreases in 1 km/h increments.
- ▶ **To adjust the set speed in 10 km/h increments:** briefly press the cruise control lever up ① or down ④ beyond the pressure point. The last stored speed increases or decreases in 10 km/h increments.

ⓘ Cruise control is not deactivated if you depress the accelerator pedal. If you accelerate to overtake, cruise control adjusts the vehicle's speed to the last speed stored after you have finished overtaking.

Deactivating cruise control

There are several ways to deactivate cruise control:

- ▶ Briefly press the cruise control lever forwards ⑥.

or

- ▶ Brake.

or

- ▶ Briefly move the cruise control lever in the direction of arrow ⑤. The variable limiter is selected. LIM indicator lamp ② on the cruise control lever is on.

Cruise control is automatically deactivated if:

- you apply the electric parking brake
- you are driving at less than 30 km/h
- ESP® intervenes or you deactivate ESP®
- while driving a vehicle with manual transmission, you engage neutral or depress the clutch pedal for longer than six seconds

- on vehicles with manual transmission, you shift to a gear that is too high, and as a result the engine speed is too low
- on vehicles with automatic transmission, you shift to position N while driving

If cruise control is deactivated, a warning tone sounds. You will see the Cruise control off message on the multifunction display for approximately five seconds. The message on the multifunction display disappears and the segments on the speedometer go out.

ⓘ The last speed stored is cleared when you switch off the engine.

Speed limiter

General notes

The speed limiter is used to set a speed limit for your vehicle. If the vehicle speed exceeds the set speed limit, the speed limiter brakes automatically. Shift to a lower gear in good time on long and steep downhill gradients. Take particular note of this when driving a laden vehicle and when towing a trailer. By doing so, you will make use of the braking effect of the engine. This relieves the load on the brake system and prevents the brakes from overheating and wearing too quickly.

Important safety notes

The speed limiter can neither reduce the risk of an accident if you fail to adapt your driving style nor override the laws of physics. The limiter cannot take into account road, weather or traffic conditions. The limiter is only an aid. You are responsible for maintaining a safe distance from the vehicle in front, for vehicle speed, for braking in good time and for staying in lane.

If a new driver takes over, advise the new driver of the speed stored.

You can set a variable or permanent limit speed:

- **Variable** for the prescribed maximum permissible speeds, e.g. in built-up areas
- **Permanent** for the permanent restriction of the maximum permissible speed, e.g. when driving on winter tyres (▷ page 191)

The speed shown on the speedometer may differ slightly from the stored speed limit.

Variable speed limiter

General notes

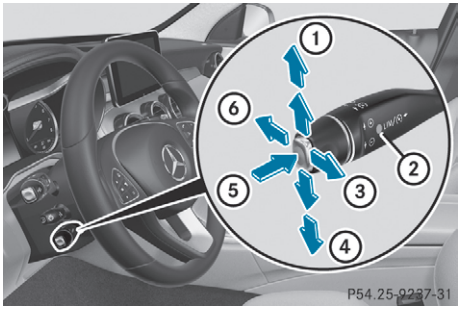

① To store the current speed or a higher speed
② LIM indicator lamp
③ Stores the current speed or recalls the last stored speed
④ Stores the current speed or a lower speed
⑤ Switches between cruise control or Distance Pilot DISTRONIC and the variable speed limiter
⑥ Switches off the variable speed limiter

With the cruise control lever, you can operate cruise control or Distance Pilot DISTRONIC and the variable speed limiter.

The LIM indicator lamp on the cruise control lever indicates which system you have selected:

- **LIM indicator lamp off:** cruise control or Distance Pilot DISTRONIC is selected
- **LIM indicator lamp on:** variable limiter is selected

You can use the cruise control lever to limit the speed to any speed above 30 km/h while the engine is running. If you have set a permanent limit speed, you cannot set the speed any higher than the fixed limit speed (▷ page 191).

Selecting the variable speed limiter

If there is a change of drivers, advise the new driver of the limit speed stored.

▶ Check whether LIM indicator lamp ② is on.

If it is on, the variable speed limiter is already selected.

If it is not, press the cruise control lever in the direction of arrow ⑤.
LIM indicator lamp ② on the cruise control lever is on. The variable limiter is selected.

Storing the current speed

You can use the cruise control lever to limit the speed to any speed above 30 km/h while the engine is running.

▶ Briefly press the cruise control lever up ① or down ④.
The current speed is stored and shown on the multifunction display.
Speedometer with segments: the segments light up from the start of the scale up to the stored speed limit.

Storing the current speed or calling up the last stored speed

⚠ WARNING

If you call up the stored speed and it is lower than the current speed, the vehicle decelerates. If you do not know the stored speed, the vehicle could decelerate unexpectedly. There is a risk of an accident.

Pay attention to the road and traffic conditions before calling up the stored speed. If you do not know the stored speed, store the desired speed again.

▶ Briefly pull the cruise control lever towards you ③.

Setting a speed

▶ **To adjust the set speed in 10 km/h increments:** briefly press the cruise control lever up ① beyond the pressure point for a higher speed, or down ④ for a lower speed.

or

▶ Keep the cruise control lever pressed beyond the pressure point until the desired speed is set. Press the cruise control lever up ① for a higher speed or down ④ for a lower speed.

▶ **To adjust the set speed in 1 km/h increments:** briefly press the cruise control lever up ① to the pressure point for a higher speed or down ④ for a lower speed.

or

▶ Keep the cruise control lever pressed to the pressure point until the desired speed is set. Press the cruise control lever up ① for a higher speed or down ④ for a lower speed.

Switching the speed limiter to passive

If you depress the accelerator pedal beyond the point of resistance (kickdown), the speed limiter switches to passive mode. The multifunction display shows the `Limiter passive` message and you are able to exceed the stored speed. When the speed limiter is switched to passive mode, the speed limiter does not brake automatically until it is reactivated.

The speed limiter is reactivated again if you:

- drive at less than the stored speed without kickdown
- set a new speed or
- call up the last speed stored again

The `Limiter passive` message then disappears from the multifunction display.

Switching off the variable speed limiter

You cannot switch the variable speed limiter off by braking.

There are several ways to deactivate the variable speed limiter:

▶ Briefly press the cruise control lever forwards ⑥.

or

▶ Briefly press the cruise control lever in the direction of arrow ⑤.
Cruise control or Distance Pilot DISTRONIC is selected. LIM indicator lamp ② on the cruise control lever goes out.

Vehicles with manual transmission: the variable speed limiter switches off automatically if you shift to too a high gear and as a result, the engine speed drops sharply.A warning tone sounds, the message on the multifunction display disappears and the segments on the speedometer go out.

The last speed stored is cleared when you switch off the engine.

Permanent limiter

You can use the on-board computer to limit the speed permanently to a value between 160 km/h (e.g. when driving on winter tyres) and 240 km/h(▷ page 258).

Shortly before the stored speed is reached, it appears on the multifunction display.

The permanent speed limiter remains active even if the variable speed limiter is deactivated.

You cannot exceed the stored limit speed, even if you depress the accelerator pedal beyond the pressure point (kickdown).

Distance Pilot DISTRONIC

General notes

Distance Pilot DISTRONIC regulates the speed and automatically helps you maintain the distance to the vehicle detected in front. Vehicles are detected with the aid of the radar sensor system. Distance Pilot DISTRONIC brakes automatically so that the set speed is not exceeded.

Shift to a lower gear in good time on long and steep downhill gradients. Take particular note of this when driving a laden vehicle. By doing so, you will make use of the braking effect of the engine. This relieves the load on the brake system and prevents the brakes from overheating and wearing too quickly.

If Distance Pilot DISTRONIC detects that there is a risk of a collision with the vehicle in front, you will be warned visually and audibly. Without your intervention, Distance Pilot DISTRONIC cannot prevent a collision. An intermittent warning tone will then sound and the distance warning lamp will light up on the instrument cluster. Brake immediately to increase the distance to the vehicle in front, or take evasive action, provided it is safe to do so.

Distance Pilot DISTRONIC operates in the range between 0 km/h and 200 km/h.

Do not use Distance Pilot DISTRONIC while driving on roads with steep gradients.

Important safety notes

⚠ WARNING

Distance Pilot DISTRONIC does not recognise

- people or animals
- stationary objects on the road, e.g. stopped or parked vehicles
- oncoming vehicles or crossing traffic

As a result, Distance Pilot DISTRONIC may neither give warnings nor intervene in such situations. There is a risk of an accident.

Always pay careful attention to the traffic situation and be ready to brake.

⚠ WARNING

Distance Pilot DISTRONIC cannot always clearly identify other road users and complex traffic situations.

In such cases, Distance Pilot DISTRONIC may:

- give an unnecessary warning and then brake the vehicle
- neither give a warning nor intervene
- accelerate or brake unexpectedly

There is a risk of an accident.

Continue to drive carefully and be ready to brake, especially if Distance Pilot DISTRONIC warns you.

⚠ WARNING

Distance Pilot DISTRONIC brakes your vehicle with up to 50% of the maximum possible deceleration. If this deceleration is not sufficient, Distance Pilot DISTRONIC alerts you with a visual and acoustic warning. There is a risk of an accident.

Apply the brakes yourself in these situations and try to take evasive action.

! When Distance Pilot DISTRONIC or the HOLD function are activated, the vehicle brakes automatically in certain situations.

To avoid damage to the vehicle, deactivate these systems in the following or similar situations:

- when towing away
- in a car wash

Distance Pilot DISTRONIC can neither reduce the risk of an accident if you fail to adapt your driving style nor override the laws of physics. Distance Pilot DISTRONIC cannot take into account road, weather or traffic conditions. Distance Pilot DISTRONIC is only an aid. You are responsible for maintaining a safe distance from the vehicle in front, for vehicle speed, for braking in good time and for staying in lane.

Do not use Distance Pilot DISTRONIC:

- in road and traffic conditions that do not allow you to maintain a constant speed, e.g. in heavy traffic or on winding roads
- on icy or slippery roads, braking or accelerating can cause the drive wheels to lose traction and the vehicle could then skid
- in poor visibility, e.g. due to fog, heavy rain or snow

Distance Pilot DISTRONIC may not detect narrow vehicles driving in front, e.g. motorcycles, or vehicles driving on a different line.

In particular, the detection of obstacles can be impaired in the following situations:

- dirt on the sensors or obscured sensors
- snow or heavy rain
- interference by other radar sources
- strong radar reflections for example, in multi-storey car parks

If Distance Pilot DISTRONIC no longer detects a vehicle in front, Distance Pilot DISTRONIC may unexpectedly accelerate to the speed stored.

This speed can:

- be too high for a filter lane or a slip road
- be so high in the right lane that you pass vehicles driving on the left (in countries where traffic drives on the right)
- be so high in the left lane that you pass vehicles driving on the right (in countries where people drive on the left)

If a new driver takes over, advise the new driver of the speed stored.

Cruise control lever

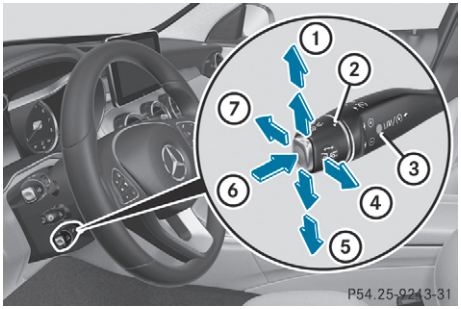

① Activates or increases the speed
② Sets the specified minimum distance
③ LIM indicator lamp
④ Activates the current speed/last stored speed
⑤ Activates or reduces the speed
⑥ Switches between Distance Pilot DISTRONIC and the variable speed limiter
⑦ Deactivates Distance Pilot DISTRONIC

With the cruise control lever, you can operate the variable speed limiter and Distance Pilot DISTRONIC.

LIM indicator lamp ③ on the cruise control lever indicates which function you have selected:

- **LIM indicator lamp ③ lights up:** variable limiter is selected.
- **LIM indicator lamp ③ off:** distance Pilot DISTRONIC is selected.

  When you activate Distance Pilot DISTRONIC, the stored speed will appear on the multifunction display for five seconds.

  Speedometer with segments: when Distance Pilot DISTRONIC is activated, the segments of the stored speed light up to the end of the scale or to a permanently set speed limit.

Selecting Distance Pilot DISTRONIC

▶ Check whether LIM indicator lamp ③ is off. If it is off, Distance Pilot DISTRONIC is already selected.

▶ If it is not, press the cruise control lever in the direction of arrow ⑥.
LIM indicator lamp ③ on the cruise control lever goes out. Distance Pilot DISTRONIC is selected.

Activating Distance Pilot DISTRONIC

Activation conditions

To activate Distance Pilot DISTRONIC, the following conditions must be fulfilled:

- the engine must be running, it may take up to two minutes of driving before Distance Pilot DISTRONIC is ready for use
- the electric parking brake must be released,
- ESP® must be switched on, but must not currently engage
- Parking Pilot must not be activated
- the transmission must be in position D

- the driver's door must be closed or your seat belt must be fastened when you shift the transmission from position P to D
- the front-passenger door and the rear doors must be closed
- the vehicle must not slip
- the Distance Pilot DISTRONIC function must be selected (▷ page 193)

Activating

▶ Briefly pull the cruise control lever towards you ④, up ① or down ⑤ .
Distance Pilot DISTRONIC is activated.

▶ Release the accelerator pedal.
The vehicle adapts its speed to that of the vehicle in front, but only up to the desired stored speed as a maximum.

If you do not fully release the accelerator pedal, the Distance Pilot passive message appears on the multifunction display. The set distance to a slower-moving vehicle in front will then not be maintained. The position of the accelerator pedal will determine the speed.

You can also activate Distance Pilot DISTRONIC when stationary. The lowest speed that can be set is 30 km/h.

▶ Briefly pull the cruise control lever towards you ④, up ① or down ⑤ .
Distance Pilot DISTRONIC is activated.

Activating at the current speed/last stored speed

⚠ WARNING

If you call up a stored speed and this is different from the current speed, the vehicle accelerates or brakes. If you do not know what the stored speed is, the vehicle may accelerate or brake unexpectedly. There is a risk of an accident.

Take the traffic conditions into account before calling up the stored speed. If you do not know what the stored speed is, store the desired speed again.

▶ Briefly pull the cruise control lever towards you ④.

▶ Release the accelerator pedal.
The first time Distance Pilot DISTRONIC is activated, it stores the current speed or regulates the speed of the vehicle to the previously stored speed.

Driving with Distance Pilot DISTRONIC

Pulling away and driving

▶ **To pull away with Distance Pilot DISTRONIC:** remove your foot from the brake pedal.

▶ Briefly pull the cruise control lever towards you ④.

or

▶ Accelerate briefly.
The vehicle pulls away and adapts its speed to that of the vehicle in front. If no vehicle is detected in front, the vehicle accelerates to the set speed.

The vehicle can also pull away when it is facing an unidentified obstacle or is driving on a different line from another vehicle. The vehicle then brakes automatically.

If Distance Pilot DISTRONIC does not detect a vehicle in front, the system operates like cruise control.

If Distance Pilot DISTRONIC detects that the vehicle in front has slowed down, it brakes the vehicle. In this way, the specified minimum distance you have selected is maintained.

If Distance Pilot DISTRONIC detects a faster-moving vehicle in front, it increases the driving speed to the set speed.

Selecting the drive program

Distance Pilot DISTRONIC supports a sporty driving style when you have selected the **S** or **S+** drive program (▷ page 169). Acceleration behind the vehicle in front or to the set speed is then noticeably more dynamic. If you have selected the **C** or **E** drive program, the vehicle accelerates more gently. This setting is recommended in stop-start traffic.

Changing lanes

If you change to the overtaking lane, Distance Pilot DISTRONIC supports you if:

- you are driving at a speed greater than 70 km/h
- you switch on the respective turn signal
- Distance Pilot DISTRONIC does not currently detect a danger of collision

If these conditions are met, your vehicle accelerates. Acceleration will be interrupted if changing lanes takes too long or if the distance between your vehicle and the vehicle in front becomes too small.

Vehicles with COMAND Online multimedia system: when you change lanes, Distance Pilot DISTRONIC monitors the right lane (in left-side traffic) or the left lane (in right-side traffic).

Vehicles with Audio 20 multimedia system: when you change lanes, Distance Pilot DISTRONIC monitors the left lane on left-hand-drive vehicles or the right lane on right-hand-drive vehicles.

Road and traffic conditions

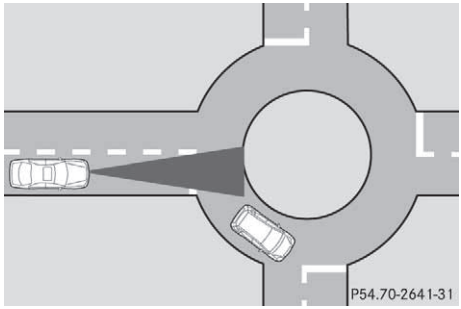

The following function is available only in vehicles with the Driving Assistance Plus package. The function is not operational in all countries.

Distance Pilot DISTRONIC uses additional information from your navigation system so that it can adapt to certain traffic situations.

This is the case if, while following a vehicle, Distance Pilot DISTRONIC is active and you:

- approach or drive around a roundabout
- approach a T-junction
- turn off at a motorway exit
- approach a tollgate

Even if the vehicle in front leaves the detection range, Distance Pilot DISTRONIC temporarily maintains the current driving speed and does not accelerate. This is based on the current map data in the navigation system.

Afterwards, the vehicle accelerates back to the speed you set.

The system takes into account the fact that overtaking on the right is not permitted on motorways or high-speed major roads at speeds of more than 80 km/h. The driving speed is adjusted to the speed of the queue of vehicles in the adjacent lane to the left.

Prevention of overtaking on the right applies to countries where traffic drives on the right. In countries where traffic drives on the left, overtaking on the left is prevented accordingly.

Stopping

⚠ WARNING

If you leave the vehicle when it is only being braked by Distance Pilot DISTRONIC, it could roll away if:

- there is a malfunction in the system or in the voltage supply.
- Distance Pilot DISTRONIC is deactivated using the cruise control lever, e.g. by a vehicle occupant or from outside the vehicle.
- the electrical system in the engine compartment, the battery or the fuses are tampered with.
- the battery is disconnected.
- the vehicle is accelerated, e.g. by a vehicle occupant.

There is a risk of an accident.

Before leaving the vehicle, always deactivate Distance Pilot DISTRONIC and secure the vehicle against rolling away.

Further information on deactivating Distance Pilot DISTRONIC (▷ page 197).

If Distance Pilot DISTRONIC detects that the vehicle in front is stopping, it brakes your vehicle to a stop.

Once your vehicle is stationary, it remains stationary and you do not need to depress the brake.

After a short period, the vehicle is secured by the electric parking brake, thus relieving the service brake.

Depending on the specified minimum distance, your vehicle will come to a standstill at a sufficient distance behind the vehicle in front. The specified minimum distance is set using the control on the cruise control lever.

When Distance Pilot DISTRONIC is activated, the transmission shifts automatically to position P if:

- the driver's seat belt is not fastened and the driver's door is open
- the engine is switched off, unless it is automatically switched off by the ECO start/stop function

The electric parking brake secures the vehicle automatically if Distance Pilot DISTRONIC is activated when the vehicle is stationary and:

- a system fault occurs
- the power supply is insufficient

If a malfunction occurs, the transmission may also be shifted to position P automatically.

Setting a speed

▶ Push the cruise control lever upwards ① for a higher speed or down ⑤ for a lower speed.
▶ Keep the cruise control lever pressed until the desired speed is reached.
▶ Release the cruise control lever.
The new speed is stored. Distance Pilot DISTRONIC is activated and adjusts the vehicle's speed to the new speed stored.
▶ **To adjust the set speed in 1 km/h increments:** briefly press the cruise control lever up ① or down ⑤ to the pressure point.
The last stored speed increases or decreases in 1 km/h increments.
▶ **To adjust the set speed in 10 km/h increments:** briefly press the cruise control lever up ① or down ⑤ beyond the pressure point.
The last stored speed increases or decreases in 10 km/h increments.

ⓘ If you accelerate to overtake, Distance Pilot DISTRONIC adjusts the vehicle's speed to the last speed stored after you have finished overtaking.

Setting the specified minimum distance

You can set the specified minimum distance for Distance Pilot DISTRONIC by varying the time span between one and two seconds. With this function, you can set the minimum distance that Distance Pilot DISTRONIC maintains to the vehicle in front, dependent on the vehicle speed. You can see this distance on the multifunction display (▷ page 197).

Make sure that you maintain the minimum distance to the vehicle in front as required by law. Adjust the distance to the vehicle in front if necessary.

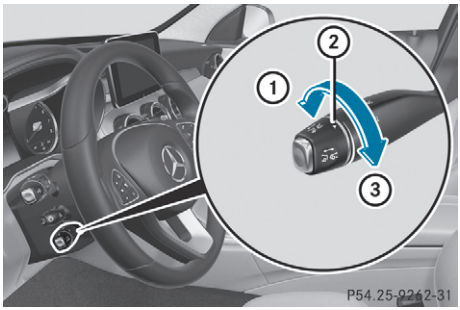

▶ **To increase:** turn control ② in direction ③. Distance Pilot DISTRONIC then maintains a greater distance between your vehicle and the vehicle in front.
▶ **To decrease:** turn control ② in direction ①. Distance Pilot DISTRONIC then maintains a shorter distance between your vehicle and the vehicle in front.

Displays on the instrument cluster

Displays on the speedometer



If Distance Pilot DISTRONIC detects a vehicle in front, the segments between the speed of the vehicle in front ① and the stored speed ② light up.

Vehicles with the Driving Assistance Plus package: the segments likewise light up if a vehicle in front is detected in the overtaking lane.

For design reasons, the speed displayed on the speedometer may differ slightly from the speed set for Distance Pilot DISTRONIC.

Displays on the assistant display

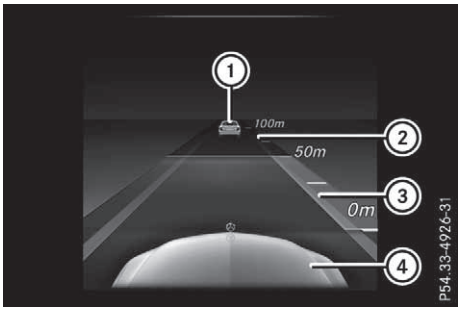

Display when Distance Pilot DISTRONIC is deactivated

① Vehicle in front, if detected
② Distance indicator: current distance to the vehicle in front
③ Specified minimum distance to the vehicle in front; adjustable
④ Own vehicle

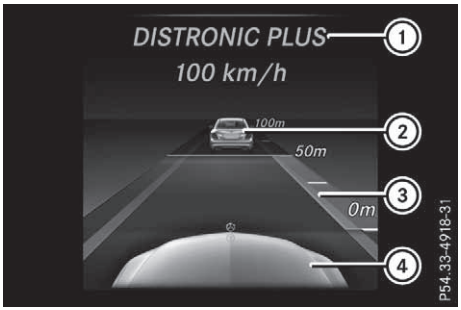

Display when Distance Pilot DISTRONIC is activated

① Distance Pilot DISTRONIC active (text only appears when the cruise control lever is actuated)
② Vehicle in front, if detected
③ Specified minimum distance to the vehicle in front; adjustable
④ Own vehicle

▶ **To call up the assistant display:** select the Assistance graphic function via the on-board computer (▷ page 252).
The multifunction display shows the stored speed for approximately five seconds when you activate Distance Pilot DISTRONIC.

Deactivating Distance Pilot DISTRONIC

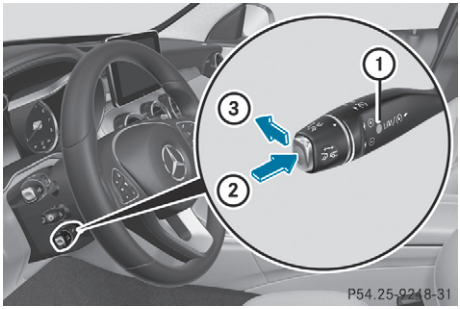

There are several ways to deactivate Distance Pilot DISTRONIC:

▶ Briefly push the cruise control lever forwards ③.

or

▶ Brake, unless the vehicle is stationary.

or

▶ Briefly push the cruise control lever in the direction of arrow ②.
The speed limiter is selected. LIM indicator lamp ① on the cruise control lever lights up.

When you deactivate Distance Pilot DISTRONIC, the Distance Pilot off message will appear on the multifunction display for approximately five seconds.

The last speed stored remains stored until you switch off the engine.

Distance Pilot DISTRONIC is not deactivated if you depress the accelerator pedal.

Distance Pilot DISTRONIC is automatically deactivated if:

- you apply the electric parking brake or the vehicle is automatically secured with the electric parking brake
- ESP® intervenes or you deactivate ESP®
- you shift the transmission to position P, R or N
- you pull the cruise control lever towards you in order to pull away and the front-passenger door or one of the rear doors is open
- the vehicle skids
- you activate Parking Pilot

If, in these cases, Distance Pilot DISTRONIC is deactivated, a warning tone sounds. The Distance Pilot off message will then be shown on the multifunction display for approximately five seconds.

Tips for driving with Distance Pilot DISTRONIC

Pay particular attention in the following traffic situations:

- Cornering, entering and exiting a bend: the ability of Distance Pilot DISTRONIC to detect vehicles when cornering is limited. Your vehicle may brake unexpectedly or late.
- Driving on a different line: Distance Pilot DISTRONIC may not detect vehicles driving in a different lane. The distance to the vehicle in front will be too short.
- Other vehicles changing lane: Distance Pilot DISTRONIC has not detected the vehicle cutting in yet. The distance to this vehicle will be too short.
- Narrow vehicles: Distance Pilot DISTRONIC does not detect the vehicle in front on the edge of the carriageway because of its narrow width. The distance to the vehicle in front will be too short.
- Obstacles and stationary vehicles: Distance Pilot DISTRONIC does not brake for obstacles or stationary vehicles. If, for example, the detected vehicle turns a corner and an obstacle or stationary vehicle is revealed, Distance Pilot DISTRONIC will not brake for them.
- Crossing traffic: Distance Pilot DISTRONIC may mistakenly detect vehicles that are crossing your lane. Activating Distance Pilot DISTRONIC at, for example, a traffic light with crossing traffic, could cause your vehicle to pull away at the wrong time.

In such situations, brake if necessary. Distance Pilot DISTRONIC is then switched off.

Distance Pilot DISTRONIC with Steering Pilot

General notes

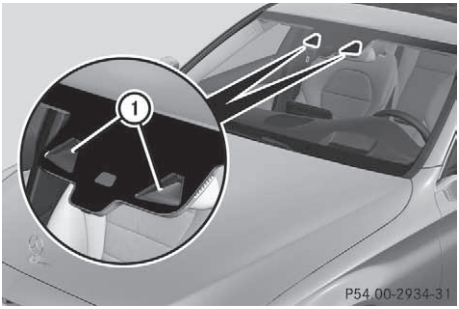

Distance Pilot DISTRONIC with Steering Pilot aids you in keeping the vehicle in the middle of the lane by means of moderate steering interventions in a speed range from 0–200 km/h.

It monitors the area in front of your vehicle by means of multifunction camera ①, at the top of the windscreen.

In a speed range from 0–60 km/h, Steering Pilot focuses on the vehicle in front, taking into account lane markings, e.g. when following vehicles in a traffic jam.

At speeds of more than 60 km/h, Steering Pilot focuses on detected lane markings (left and right), focusing on the vehicle in front only if detected lane markings are not present.

If these conditions are not present, Steering Pilot cannot provide assistance.

Distance Pilot DISTRONIC must be active in order for the function to be available.

Important safety notes

Distance Pilot DISTRONIC and Steering Pilot can neither reduce the risk of an accident if you fail to adapt your driving style nor override the laws of physics. Distance Pilot DISTRONIC with Steering Pilot cannot take into account road, weather or traffic conditions. Distance Pilot DISTRONIC with Steering Pilot is only an aid. You are responsible for maintaining a safe distance from the vehicle in front, for vehicle speed, for braking in good time and for staying in lane.

Distance Pilot DISTRONIC with Steering Pilot does not detect road and traffic conditions and does not detect all road users. If you are following a vehicle that is driving towards the edge of the carriageway, your vehicle could come into

contact with the kerb or other road boundaries. Be particularly aware of other road users, e.g. cyclists, that are directly next to your vehicle.

Obstacles such as traffic markers on a construction site that are on the lane or projecting out into the lane are not detected.

An inappropriate steering intervention, e.g. after intentionally driving over a lane marking, can be corrected at any time if you steer slightly in the opposite direction.

Distance Pilot DISTRONIC with Steering Pilot cannot continuously keep your vehicle in lane. In some cases, the steering intervention is not sufficient to bring the vehicle back to the lane. In such cases, you must steer the vehicle yourself to ensure that it does not leave the lane.

The system may be impaired or may not function in the following situations:

- poor visibility, e.g. due to insufficient illumination of the road, or due to snow, rain, fog or spray
- glare, e.g. from oncoming traffic, the sun or reflection from other vehicles (e.g. if the road surface is wet)
- the windscreen is dirty, misted up, damaged or covered, for instance by a sticker, in the vicinity of the camera
- there are no lane markings, or several unclear lane markings for one lane are present, e.g. around construction sites
- the lane markings are worn away, dark or covered up, e.g. by dirt or snow
- the distance to the vehicle in front is too short and thus the lane markings cannot be detected
- the lane markings change quickly, e.g. lanes branch off, cross one another or merge
- the road is narrow and winding
- there are highly variable shade conditions on the road surface

The system is switched to passive and no longer assists you by performing steering interventions if:

- you actively change lane
- you switch on the turn signal
- you take your hands off the steering wheel or do not steer for a prolonged period of time

After you have finished changing lanes, Steering Pilot is automatically active once more.

Steering Pilot cannot provide assistance:

- on very sharp corners
- when you are towing a trailer
- when a loss of tyre pressure or a defective tyre has been detected and displayed

Also observe the important safety notes on Distance Pilot DISTRONIC (▷ page 192).

The steering interventions are carried out with a limited steering moment. The system requires the driver to keep his hands on the steering wheel and to steer himself.

If you do not steer yourself or if you take your hands off the steering wheel for a prolonged period of time, the system will first alert you with a visual warning. A steering wheel symbol appears on the multifunction display. If you have still not started to steer and have not taken hold of the steering wheel, a warning tone also sounds to remind you to take control of the vehicle after five seconds at the latest. Steering Pilot is then switched to passive. Distance Pilot DISTRONIC remains active.

Activating Steering Pilot

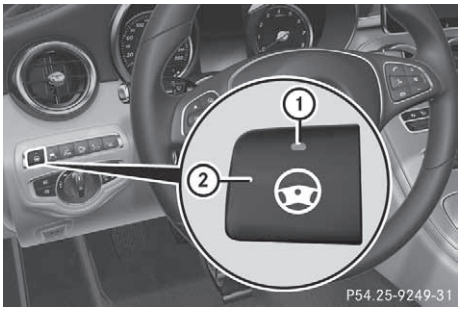

▶ Press button ②.
Indicator lamp ① lights up. The Steering Pilot On message appears on the multifunction display. Steering Pilot is activated.

Information on the multifunction display

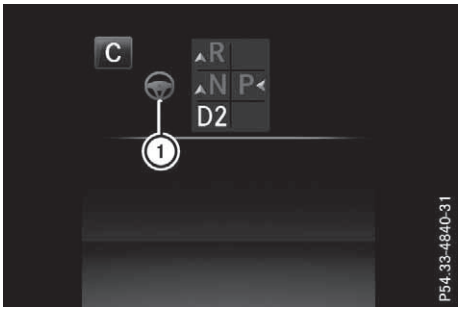

If Steering Pilot is activated but not ready for a steering intervention, steering wheel symbol ① appears in grey. If the system provides you with support by means of steering interventions, symbol ① is shown in green.

Deactivating Steering Pilot

▶ Press button ②.
Indicator lamp ① goes out. The Steering Pilot Off message appears on the multifunction display. Steering Pilot is deactivated.

When Distance Pilot DISTRONIC is deactivated or not available, Steering Pilot is deactivated automatically.

HOLD function

General notes

The HOLD function can assist the driver in the following situations:

- when pulling away, especially on steep slopes
- when manoeuvring on steep slopes
- when waiting in traffic

The vehicle is kept stationary without the driver having to depress the brake pedal.

The braking effect is cancelled and the HOLD function deactivated when you depress the accelerator pedal to pull away.

Important safety notes

⚠ WARNING

When leaving the vehicle, it can still roll away despite being braked by the HOLD function if:

- there is a malfunction in the system or in the voltage supply
- the HOLD function is deactivated by the accelerator pedal being depressed, e.g. by a vehicle occupant
- the electrical system in the engine compartment, the battery or the fuses are tampered with
- the battery is disconnected

There is a risk of an accident.

Before leaving the vehicle, always deactivate the HOLD function and secure the vehicle from rolling away.

! When DISTRONIC PLUS or the HOLD function is activated, the vehicle brakes automatically in certain situations.

To avoid damage to the vehicle, deactivate DISTRONIC PLUS and the HOLD function in the following or similar situations:

- when towing away
- in a car wash

Deactivating the HOLD function (▷ page 201).

Activation conditions

You can activate the HOLD function if all the following conditions are fulfilled:

- the vehicle is stationary
- the engine is running or it has been automatically switched off by the ECO start/stop function
- the driver's door is closed or your seat belt is fastened
- the electric parking brake is released
- **vehicles with automatic transmission:** the transmission is in position D, R or N
- DISTRONIC PLUS is deactivated

Activating the HOLD function

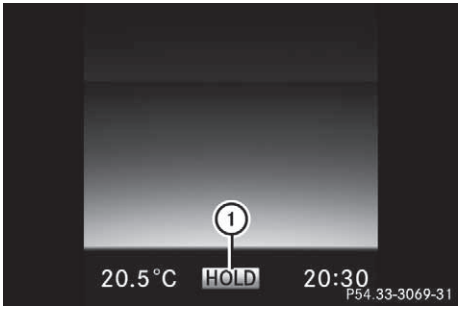

- ▶ Make sure that the activation conditions are met.
- ▶ Depress the brake pedal.
- ▶ Quickly depress the brake pedal further until ① appears on the multifunction display. The HOLD function is activated. You can release the brake pedal.

If depressing the brake pedal the first time does not activate the HOLD function, wait briefly and then try again.

Deactivating the HOLD function

The HOLD function is deactivated automatically if:

- you accelerate – on vehicles with automatic transmission: only when the transmission is in position D or R.
- the transmission is in position P on vehicles with automatic transmission
- you depress the brake pedal again with a certain amount of pressure until display HOLD disappears from the multifunction display
- you secure the vehicle using the electric parking brake
- you activate DISTRONIC PLUS

After a short period, the vehicle is secured by the electric parking brake, thus relieving the service brake.

Vehicles with automatic transmission

When the HOLD function is activated, the transmission is shifted automatically to position P if:

- the driver's seat belt is not fastened and the driver's door is open
- the engine is switched off, unless it is automatically switched off by the ECO start/stop function

The electric parking brake secures the vehicle automatically if the HOLD function is activated, the vehicle is stationary and:

- a system fault occurs
- the power supply is insufficient

If a malfunction occurs, the transmission may also be shifted to position P automatically.

Vehicles with manual transmission

The electric parking brake secures the vehicle automatically if the HOLD function is activated and:

- the driver's seat belt is not fastened and the driver's door is open
- the engine is switched off, unless it is automatically switched off by the ECO start/stop function
- a system fault occurs
- the power supply is insufficient

The `Brake immediately` message may also appear on the multifunction display.

- ▶ Immediately depress the brake pedal firmly until the warning message on the multifunction display goes out.
  The HOLD function is deactivated.

A horn will sound at regular intervals if you turn off the engine, take off your seat belt or open the driver's door when the HOLD function is activated. The horn alerts you to the fact that the HOLD function is still activated. If you attempt to lock the vehicle, the tone becomes louder. The vehicle cannot be locked until you have deactivated the HOLD function.

ⓘ After the engine has been switched off, it can only be restarted once the HOLD function has been deactivated.

RACE START

Important safety notes

ⓘ RACE START must not be used on normal roads. RACE START must be activated and used only on dedicated race circuits, not on public roads.

ⓘ RACE START is only available for Mercedes-AMG vehicles except Mercedes-AMG C 43 4MATIC.

RACE START enables optimum acceleration from a standing start. For this, a suitably high-

grip surface is required; the tyres and vehicle must also be in good condition.

⚠ WARNING

If you use RACE START, individual tyres may get into a spin and the vehicle could skid. Depending on the selected ESP® mode, there is an increased risk of skidding and having an accident. Make sure that no persons, animals or obstacles are within range of the vehicle.

ⓘ Observe the safety notes on driving safety systems (▷ page 72).

Be sure to observe the safety notes and information on ESP® (▷ page 75).

Activation conditions

You can activate RACE START if:

- the doors are closed
- the engine is running and it has reached an operating temperature of approximately 71 °C– this is the case when the oil temperature gauge on the multifunction display is shown in white
- the drive program **S**, **S+** or **Race** is selected (▷ page 162)
- the steering wheel is in the straight-ahead position
- the vehicle is stationary and the brake pedal is depressed (left foot)
- the transmission is in position D.

Activating RACE START

ⓘ When manual mode (▷ page 171) is active, the transmission automatically shifts up in the RACE START drive program. This function supports maximum acceleration with RACE START. After going through an acceleration process once from a stationary position, this function is automatically deactivated.

▶ Depress the brake pedal with your left foot and keep it depressed.

▶ Pull and hold both steering wheel gearshift paddles (▷ page 171).
The message RACE START Confirm: Paddle UP Cancel: Paddle DOWN appears on the multifunction display.

▶ Release both steering wheel gearshift paddles (▷ page 171).

ⓘ If the activation conditions are no longer fulfilled, RACE START is cancelled. The message RACE START cancelled appears on the multifunction display.

▶ To cancel: pull the left steering wheel gearshift paddle (▷ page 171).

or

▶ To confirm: pull the right steering wheel gearshift paddle (▷ page 171).
The message RACE START available Depress accelerator appears on the multifunction display.

ⓘ If you do not depress the accelerator pedal fully within two seconds, RACE START is cancelled. The message RACE START not possible See Owner's Manual appears on the multifunction display.

▶ Fully depress the accelerator pedal until the engine speed stops rising.
The message RACE START Release brake to start appears on the multifunction display.

ⓘ If you do not release the brake pedal within five seconds, RACE START is cancelled. The message RACE START cancelled appears on the multifunction display.

▶ Take your foot off the brake, but keep the accelerator pedal depressed.
The vehicle pulls away at maximum acceleration.

The message RACE START active appears on the multifunction display.

RACE START is deactivated when the vehicle reaches a speed of approximately 50 km/h.

RACE START is deactivated immediately if you release the accelerator pedal during RACE START or if any of the activation conditions are no longer fulfilled. The RACE START not possible See Owner's Manual or RACE START cancelled message appears on the multifunction display.

ⓘ After using it several times in short succession, RACE START will be unavailable until a certain distance has been driven.

AIRMATIC

General notes

AIRMATIC is an air suspension system with variable damping for improved driving comfort. All-round level control ensures the best possible suspension and constant ground clearance, even with a laden vehicle. When you drive at speed, the vehicle is lowered automatically to improve driving safety and to reduce fuel consumption. You also have the option of manually adjusting the vehicle level. AIRMATIC consists of level setting, level control and ADS PLUS (Adaptive Damping System with continuous damping adjustment).

The vehicle level can be set using the DYNAMIC SELECT switch (▷ page 162) or the level button (▷ page 203). The setting always corresponds to the last function selected.

Important safety notes

⚠ WARNING

People's limbs may become trapped if they are located underneath the vehicle or between the vehicle body and the tyres when the vehicle is lowering. There is a danger of injury.

When lowering the vehicle, make sure no one is underneath the vehicle or in the immediate vicinity of the wheel arches.

ⓘ If one of the doors is open, the vehicle is not lowered.

Vehicle level

Setting the raised vehicle level

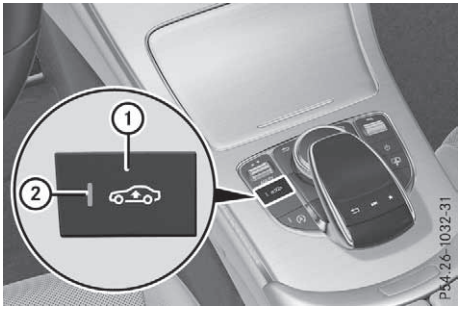

It is possible to choose between the "Normal" and "Raised" vehicle levels below a speed of 80 km/h. Select the "Normal" setting for normal road surfaces and "Raised" for driving with snow chains or on particularly poor road surfaces. Your selection remains stored even if you remove the key from the ignition lock.

▶ Start the engine.

If indicator lamp ② is not lit:

▶ Press button ①.
Indicator lamp ② lights up. The vehicle is raised by 25 mm compared with the normal level.

The `Vehicle rising` message appears on the multifunction display.

ⓘ The message disappears after ten seconds, irrespective of the level reached. If necessary, the vehicle is raised further.

The "Raised level" setting is cancelled if you:

- drive at speeds greater than 120 km/h
- drive for approximately three minutes at a speed greater than 80 km/h

The "Raised level" remains saved when you are not driving within these speed ranges.

Setting the normal vehicle level

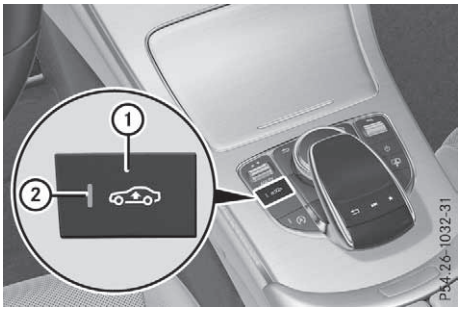

▶ Start the engine.

If indicator lamp ② is lit:

▶ Press button ①.
Vehicles with automatic transmission: indicator lamp ② goes out. The vehicle is adjusted to the height of the drive program currently selected (▷ page 162).

Vehicles with manual transmission: indicator lamp ② goes out. The vehicle is adjusted to the height of the drive program currently selected (▷ page 162).

Suspension settings

General notes

The Adaptive Damping System with continuous damping adjustment (ADS PLUS) automatically controls the calibration of the dampers.

The damping is adjusted individually to each wheel and depends on:

- your driving style, e.g. sporty
- the road surface condition, e.g. bumps
- your individual selection, i.e. sport or comfort

Your selection remains stored even if you remove the key from the ignition lock.

Sport mode

In the **S** (Sport) and **S+** (Sport Plus) drive programs, the firmer suspension tuning ensures even better contact with the road. Select this mode when employing a sporty driving style, e.g. on winding country roads.

▶ **Vehicles with automatic transmission:** select the **S** or **S+** drive program with the DYNAMIC SELECT switch (▷ page 162).

Vehicles with manual transmission: select the **S** or **S+** drive program with the DYNAMIC SELECT switch (▷ page 162).
The vehicle is lowered by 15 mm compared with the normal level.

Comfort mode

In the **E** and **C** drive programs, the driving characteristics of your vehicle are more comfortable. Therefore, select this mode if you prefer a more comfortable driving style. Select Comfort mode also when driving at speed on straight roads, e.g. on straight stretches of motorway.

▶ **Vehicles with automatic transmission:** select the **E** or **C** drive program with the DYNAMIC SELECT switch (▷ page 162).

Vehicles with manual transmission: select the **E** or **C** drive program with the DYNAMIC SELECT switch (▷ page 162).
The vehicle is raised to normal level.

At speeds of above 125 km/h, the vehicle is automatically lowered by 15 mm in the **E** and **C** drive programs. At speeds of below 80 km/h, the vehicle is raised again.

AMG RIDE CONTROL

General notes

The electronically controlled damping system works continuously. This improves driving safety and ride comfort.

The damping is adjusted individually to each wheel and depends on:

- your driving style, e.g. sporty
- the road surface condition, e.g. bumps
- your individual selection of Sport, Sport + or Comfort

The suspension setting is adjusted using the corresponding button on the centre console.

ⓘ The mode can also be set using the DYNAMIC SELECT switch (▷ page 162).
This is possible only:

- with the AMG RIDE CONTROL sports suspension button on the centre console, and
- with the DYNAMIC SELECT switch, the same mode is selected for the chassis – this is the case, for example, when both are set to Comfort mode

If the ignition is switched off for less than four hours, the previously selected drive program is activated when the engine is next started. If the ignition is switched off for more than four hours, Comfort mode is activated when the engine is next started.

Sport mode

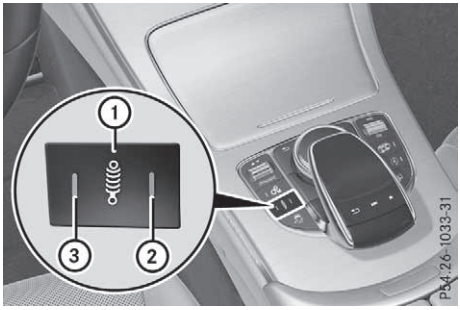

The firmer setting of the suspension tuning in Sport mode ensures even better contact with the road. Select this mode when employing a sporty driving style, e.g. on winding country roads.

▶ Press button ① once.
Indicator lamp ③ lights up. You have selected Sport mode.
The AMG Ride Control SPORT message appears on the multifunction display.

Sport + mode

The very firm setting of the suspension setting in Sport + mode ensures the best possible contact with the road. Select this mode only when driving on race circuits.

If indicator lamps ② and ③ are off:

▶ Press button ① twice.
Indicator lamps ② and ③ light up. You have selected Sport + mode.
The AMG Ride Control SPORT + message appears on the multifunction display.

If indicator lamp ③ lights up:

▶ Press button ① once.
Second indicator lamp ② lights up. You have selected Sport + mode.
The AMG Ride Control SPORT + message appears on the multifunction display.

Comfort mode

In Comfort mode, the driving characteristics of your vehicle are more comfortable. Select this mode if you prefer a comfortable driving style. This mode is also suitable when driving at speed on straight roads, e.g. on straight stretches of a motorway.

▶ Press button ① repeatedly until indicator lamps ② and ③ go out.
You have selected Comfort mode.
The AMG Ride Control COMFORT message appears on the multifunction display.

4MATIC (permanent all-wheel drive)

4MATIC ensures permanent drive for all four wheels. Together with ESP®, it improves the traction of your vehicle whenever a drive wheel spins due to insufficient grip.

If you fail to adapt your driving style or if you are inattentive, 4MATIC can neither reduce the risk of an accident nor override the laws of physics.

4MATIC does not take into account

- the road and weather conditions
- the traffic situation

4MATIC is only an aid. You are responsible for the distance to the vehicle in front, for vehicle speed, for braking in good time and for staying in lane.

If a drive wheel spins due to insufficient grip:

- When pulling away, only depress the accelerator pedal as far as is necessary.
- accelerate less when driving.

! Never tow the vehicle with one axle raised. This may damage the transfer case. Damage of this sort is not covered by the Mercedes-Benz implied warranty. All wheels must remain either on the ground or be fully raised. Observe the instructions for towing the vehicle with all wheels in full contact with the ground.

i In wintry driving conditions, the maximum effect of 4MATIC can only be achieved if you use winter tyres (M+S tyres), with snow chains if necessary.

Parking Pilot

General notes

Parking Pilot is an electronic parking aid with an ultrasonic sensor system. It measures the road on both sides of the vehicle. A parking symbol indicates a suitable parking space. Active steering intervention and brake application can assist you during parking and when exiting a parking space. You can also still use Parking Assist PARKTRONIC (▷ page 210).

Important safety notes

Parking Pilot is only an aid. It is not a substitute for your attention to the immediate surroundings. The responsibility for safe manoeuvring and parking remains with you. Make sure that no persons, animals or objects are in the manoeuvring range.

When Parking Assist PARKTRONIC is deactivated, Parking Pilot is also unavailable.

For vehicles with the trailer tow hitch folded out, the minimum length for parking spaces is slightly longer.

If you have attached a trailer to your vehicle, you should not use Parking Pilot. Once the electrical connection is established between your vehicle and the trailer, Parking Pilot is no longer available. Parking Assist PARKTRONIC is deactivated for the rear area.

⚠ WARNING

While parking or pulling out of a parking space, the vehicle swings out and can drive onto areas of the oncoming lane. This could cause you to collide with other road users. There is a risk of an accident.

Pay attention to other road users. Stop the vehicle if necessary or cancel the Parking Pilot parking procedure.

! If unavoidable, you should drive over obstacles such as kerbs slowly and not at a sharp angle. Otherwise, you may damage the wheels or tyres.

Parking Pilot may also display spaces not suitable for parking, e.g.:

- in a zone where parking or stopping is prohibited
- in front of driveways or entrances and exits
- on unsuitable surfaces

Parking tips:

- on narrow roads, drive as closely as possible past the parking space
- parking spaces that are littered or overgrown might be identified or measured incorrectly
- parking spaces that are partially occupied by trailer drawbars might not be identified as such or be measured incorrectly
- snowfall or heavy rain may lead to a parking space being measured inaccurately
- pay attention to the Parking Assist PARKTRONIC warning messages (▷ page 211) during the parking procedure
- you can intervene in the steering procedure to correct it at any time – Park Pilot is then cancelled
- when transporting a load that protrudes from your vehicle, you should not use Parking Pilot
- never use Parking Pilot when snow chains are fitted
- always observe the specified tyre pressure for your vehicle as this has a direct influence on the parking characteristics of the vehicle

Use Parking Pilot for parking spaces that are:

- parallel or at right angles to the direction of travel
- on straight roads, not bends
- on the same level as the road, e.g. not on the pavement

Detecting parking spaces

Objects located above the detection range of Parking Pilot will not be detected when the parking space is measured. These are not taken into account when the parking procedure is calculated, e.g. overhanging loads, tail sections or loading ramps of goods vehicles.

⚠ WARNING

If there are objects above the detection range:

- Parking Pilot may steer in too early
- the vehicle may not stop in front of these objects

This could cause a collision. There is a risk of an accident.

If objects are located above the detection range, stop and deactivate Parking Pilot.

Further information on the detection range (▷ page 210).

Parking Pilot does not assist you parking in spaces at a right angle to the direction of travel if:

- two parking spaces are located directly next to one another
- the parking space is directly next to a low obstacle such as a low kerb
- you forward-park

Parking Pilot does not assist you parking in spaces parallel with or at a right angle to the direction of travel if:

- the parking space is on a kerb
- the system reads the parking space as being blocked, such as by foliage or grass paving blocks
- the area is too small for the vehicle to manoeuvre into
- the parking space is bordered by an obstacle, e.g. a tree, a post or a trailer

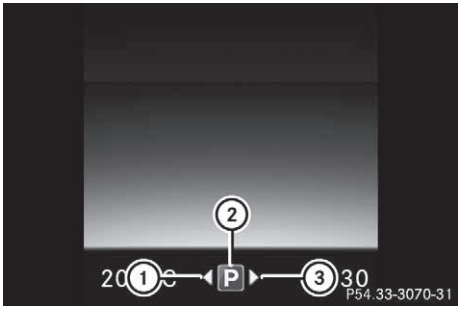

① Detected parking space on the left
② Parking symbol
③ Detected parking space on the right

Parking Pilot is activated automatically when driving forwards. The system is operational at speeds of up to approximately 35 km/h. While in operation, the system independently locates and measures parking spaces on both sides of the vehicle.

Parking Pilot will detect only parking spaces which are:

- parallel or at right angles to the direction of travel
- parallel to the direction of travel and are at least 1.5 m wide
- parallel to the direction of travel and at least 1.0 m longer than your vehicle
- at right angles to the direction of travel and at least 1.0 m wider than your vehicle

ⓘ Note that Parking Pilot PARKTRONIC cannot measure the depth of parking spaces if they are at right angles to the direction of travel. You will need to judge whether your vehicle will fit in the parking space.

When driving at speeds below 30 km/h, you will see parking symbol ② as a status indicator on the instrument cluster. When a parking space has been detected, an arrow towards the right or the left also appears. Parking Pilot displays only parking spaces on the front-passenger side as standard. Parking spaces on the driver's side are displayed as soon as the turn signal on the driver's side is activated. When parking on the driver's side, this must remain activated until you confirm the use of Parking Pilot by pressing the OK button on the multifunction steering wheel. The system automatically determines whether the parking space is parallel or at right angles to the direction of travel.

A parking space is displayed while you are driving past it, and until you are approximately 15 m away from it.

Parking

⚠ WARNING

If you leave the vehicle when it is only being braked by Parking Pilot, it could roll away if:

- there is a malfunction in the system or in the voltage supply.
- the electrical system in the engine compartment, the battery or the fuses are tampered with.
- the battery is disconnected
- the vehicle is accelerated, e.g. by a vehicle occupant.

There is a risk of an accident.

Before leaving the vehicle, always secure it against rolling away.

ⓘ **Vehicles with automatic transmission:** if Parking Assist PARKTRONIC detects obstacles, Parking Pilot brakes automatically while the vehicle is entering the parking space. You are responsible for braking in good time.

▶ Stop the vehicle when the parking symbol shows the desired parking space on the instrument cluster.

▶ **Vehicles with automatic transmission:** shift the transmission to position R.

Vehicles with manual transmission: shift to reverse gear.

The message Start Parking Pilot? Yes: OK No: ⮌ appears on the multifunction display.

▶ **To cancel the procedure:** press the ⮌ button on the multifunction steering wheel or pull away.

or

▶ **To park using Parking Pilot:** press button OK on the multifunction steering wheel.

The message Parking Pilot active Accelerate and brake Observe surroundings appears on the multifunction display.

▶ Release the multifunction steering wheel.

▶ Reverse the vehicle, being ready to brake at all times. When reversing, drive at a speed

below approximately 10 km/h. Otherwise, Parking Pilot is cancelled.
Vehicles with automatic transmission: Parking Pilot brakes the vehicle to a standstill when the vehicle approaches the rear border of the parking space.

Manoeuvring may be required in tight parking spaces.

- **Vehicles with manual transmission:** stop as soon as Parking Assist PARKTRONIC sounds the continuous warning tone, if not before.
  Manoeuvring may be required in tight parking spaces.

Vehicles with automatic transmission: the Parking Pilot active Select D Observe surroundings message appears on the multifunction display.

Vehicles with manual transmission: the Parking Pilot active Engage forward gear Observe surroundings message appears on the multifunction display.

- **Vehicles with automatic transmission:** shift the transmission to position D when the vehicle is stationary.

  Vehicles with manual transmission: shift to first gear while the vehicle is stationary. Parking Pilot steers immediately in the other direction.

  The message Parking Pilot active Accelerate and brake Observe surroundings appears on the multifunction display.

You will achieve the best results by waiting for the steering procedure to complete before pulling away.

- Drive forwards and be ready to brake at all times.
  Vehicles with automatic transmission: Parking Pilot brakes the vehicle to a standstill when the vehicle approaches the front border of the parking space.

  Manoeuvring may be required in tight parking spaces.

- **Vehicles with manual transmission:** stop as soon as Parking Assist PARKTRONIC sounds the continuous warning tone, if not before.

Vehicles with automatic transmission: the Parking Pilot active Select R Observe surroundings message appears on the multifunction display.

Vehicles with manual transmission: the Parking Pilot active Engage reverse gear Observe surroundings message appears on the multifunction display.

As soon as the parking procedure is complete, the Park Assist ended message appears and a warning tone sounds. The vehicle is now parked.

Vehicles with automatic transmission: the vehicle is kept stationary without the driver having to depress the brake pedal. The braking effect is cancelled when you depress the accelerator pedal.

Parking Pilot no longer supports you with steering interventions and brake applications. When Parking Pilot is finished, you must steer and brake again yourself. Parking Assist PARKTRONIC is still available.

Parking tips:

- The way your vehicle is positioned in the parking space after parking is dependent on various factors. These include the position and shape of the vehicles parked in front of and behind it and the conditions of the location. It is possible that Parking Pilot could guide you too far or not far enough into a parking space. In some cases, it may also lead you across or onto the kerb. Cancel the parking procedure with Parking Pilot if necessary.
- **Vehicles with automatic transmission:** you can also preselect transmission position D. The vehicle redirects and does not drive as far into the parking space. Should the transmission change take place too early, the parking procedure is cancelled. A sensible parking position can no longer be achieved from this position.
- **Vehicles with manual transmission:** you can also engage forward gear prematurely. The vehicle redirects and does not drive as far into the parking space. Should the transmission change take place too early, the parking procedure is cancelled. A sensible parking position can no longer be achieved from this position.

Exiting a parking space

In order that Parking Pilot can support you when exiting the parking space:

- the border of the parking space must be high enough at the front and the rear – a kerb, for example, is too small.
- the border of the parking space must not be too wide – your vehicle can be manoeuvred into a position at a maximum of 45° to the starting position in the parking space.
- a manoeuvring distance of at least 1.0 m must be available

Parking Pilot can assist you with exiting a parking space only if you have parked the vehicle parallel to the direction of travel using Parking Pilot.

Vehicles with automatic transmission: if Parking Assist PARKTRONIC detects obstacles, Parking Pilot brakes automatically while the vehicle is exiting the parking space. You are responsible for braking in good time.

- ▶ Start the engine.
- ▶ Release the electric parking brake.
- ▶ Switch on the turn signal in the direction in which you intend to pull away.
- ▶ **Vehicles with automatic transmission:** shift the transmission to position D or R.
  Vehicles with manual transmission: shift to forward or reverse gear.
  The Start Parking Pilot? Yes: OK No: ⮌ appears on the multifunction display.
- ▶ **To cancel the procedure:** press the ⮌ button on the multifunction steering wheel or pull away.

or

- ▶ **To exit a parking space using Parking Pilot:** press the OK button on the multifunction steering wheel.
  The Parking Pilot active Accelerate and brake Observe surroundings appears on the multifunction display.
- ▶ Release the multifunction steering wheel.
- ▶ Pull away, being ready to brake at all times. Do not exceed a maximum speed of approximately 10 km/h when exiting a parking space. Otherwise, Parking Pilot is cancelled.
- ▶ **Vehicles with automatic transmission:** depending on the message or as required, shift the transmission to position D or R.
  Vehicles with manual transmission: depending on the message or as required, engage forward or reverse gear.
  Parking Pilot steers immediately in the other direction. The message Parking Pilot active Accelerate and brake Observe surroundings appears on the multifunction display.

You will achieve the best results by waiting for the steering procedure to complete before pulling away.

If you reverse after activation, the steering wheel is moved to the straight-ahead position.

- ▶ Drive forwards and reverse as prompted by Parking Assist PARKTRONIC warning displays, several times if necessary.

Once you have exited the parking space completely, the steering wheel is moved to the straight-ahead position. You hear a tone and the Park Assist ended message appears on the multifunction display. You will then have to steer and merge into traffic on your own. Parking Assist PARKTRONIC is still available. You can take over the steering before the vehicle has exited the parking space completely. This is useful if you recognise that it is already possible to pull out of the parking space.

Cancelling Active Parking Pilot

- ▶ Stop the movement of the multifunction steering wheel or steer yourself.
  Parking Pilot is cancelled at once. The message Parking Pilot cancelled appears on the multifunction display.

or

- ▶ Press the Parking Assist PARKTRONIC button (▷ page 212).
  Parking Assist PARKTRONIC is switched off and Parking Pilot is immediately cancelled. The message Parking Pilot cancelled appears on the multifunction display.

Parking Pilot is cancelled automatically when:

- the electric parking brake is applied
- transmission position P is selected in vehicles with automatic transmission
- parking using Parking Pilot is no longer possible

- you are driving at a speed greater than 10 km/h
- a wheel spins and ESP® intervenes or fails – in such cases the warning lamp lights up on the instrument cluster

A warning tone sounds. The parking symbol disappears and the multifunction display shows the Parking Pilot cancelled message.

If Parking Pilot is cancelled, you must steer and brake again yourself.

If a system malfunction occurs, the vehicle is braked to a standstill. To drive on, depress the accelerator pedal again.

PARKTRONIC Parking Assist

Important safety notes

Parking Assist PARKTRONIC is an electronic parking aid with ultrasound. It monitors the area around your vehicle using six sensors in the front bumper and six sensors in the rear bumper. Parking Assist PARKTRONIC shows you the distance between your vehicle and an obstacle visually and audibly.

Parking Assist PARKTRONIC is only an aid. It is not a substitute for your attention to the immediate surroundings. The responsibility for safe manoeuvring and parking remains with you. Make sure that there are no persons, animals or objects in the manoeuvring area while manoeuvring and parking in/leaving parking spaces.

! When parking, pay particular attention to objects above or below the sensors, such as flower pots or trailer drawbars. Parking Assist PARKTRONIC does not detect such objects when they are in the immediate vicinity of the vehicle. You could damage the vehicle or the objects.

The sensors may not detect snow and other objects that absorb ultrasonic waves.

Ultrasonic sources such as an automatic car wash, the compressed-air brakes of a lorry or a pneumatic drill could cause Parking Assist PARKTRONIC to malfunction.

Parking Assist PARKTRONIC may not function correctly on uneven terrain.

! Fold in the ball coupling if the trailer tow hitch is not required. Parking Assist PARKTRONIC measures the minimum detection range to an obstacle from the bumper, not the ball coupling.

Parking Assist PARKTRONIC is activated automatically when you:

- switch on the ignition
- for vehicles with automatic transmission, shift the transmission to position D, R or N

Parking Assist PARKTRONIC is deactivated at speeds above 18 km/h. It is reactivated at lower speeds.

Parking Assist PARKTRONIC is deactivated for the rear area when you establish the electrical connection between your vehicle and a trailer.

Range of the sensors

Parking Assist PARKTRONIC does not take into account obstacles located:

- below the detection range, e.g. persons, animals or objects
- above the detection range, e.g. overhanging loads, tail sections or loading ramps of goods vehicles

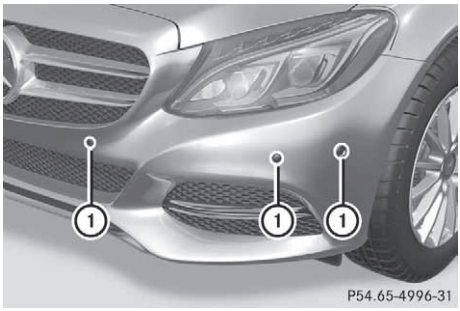

① Sensors on the front bumper, left-hand side (example)

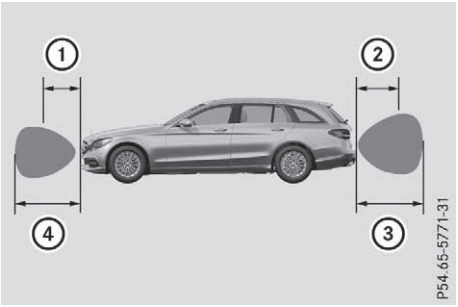

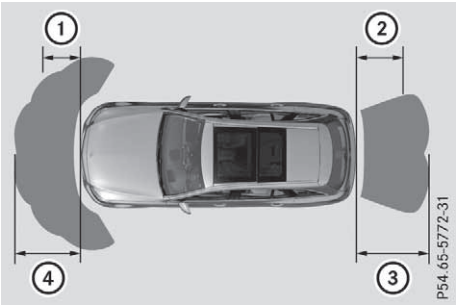

① Approx. 60 cm (corners)
② Approx. 80 cm (corners)
③ Approx. 120 cm (centre)
④ Approx. 100 cm (centre)

The sensors must be free of dirt, ice and slush. Otherwise, they may not function correctly. Clean the sensors regularly, taking care not to scratch or damage them (▷ page 351).

Minimum distance

Centre	Approx. 20 cm
Corners	Approx. 15 cm

If there is an obstacle within this range, the relevant warning displays light up and a warning tone sounds. If the distance falls below the minimum, the distance may no longer be shown.

Warning displays

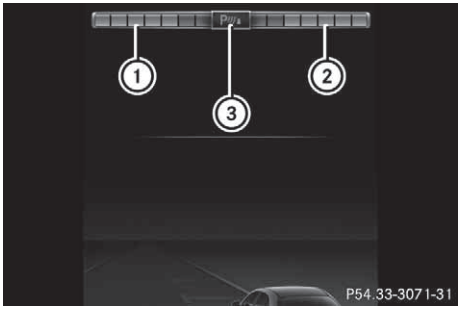

① Segments on the left-hand side of the vehicle
② Segments on the right-hand side of the vehicle
③ Segments showing operational readiness

The warning displays show the distance between the sensors and the obstacle. The warning display for the front area is on the instrument cluster. The warning display for the rear area is located on the roof lining in the rear compartment.

The warning display for each side of the vehicle is divided into five yellow and two red segments. Parking Assist PARKTRONIC is operational if operational readiness indicator ③ lights up.

The gear lever position or the transmission position of the automatic transmission and the direction in which the vehicle is rolling determine which warning display is active when the engine is running.

Manual transmission:

Gear lever position	Warning display
Forward gear or **Neutral**	Front area activated
Reverse gear	Rear and front areas activated

Automatic transmission:

Transmission position	Warning display
D	Front area activated
R, N or the vehicle is rolling backwards	Rear and front areas activated
P	No areas activated

One or more segments light up as the vehicle approaches an obstacle, depending on the vehicle's distance from the obstacle. In addition, warning tones are emitted.

When the distance to the obstacle is sufficient, you will hear an intermittent warning tone. The shorter the distance to the obstacle, the shorter the frequency of the intermittent warning tones becomes. When the minimum distance is reached, you hear a continuous warning tone.

Activating/deactivating Parking Assist PARKTRONIC

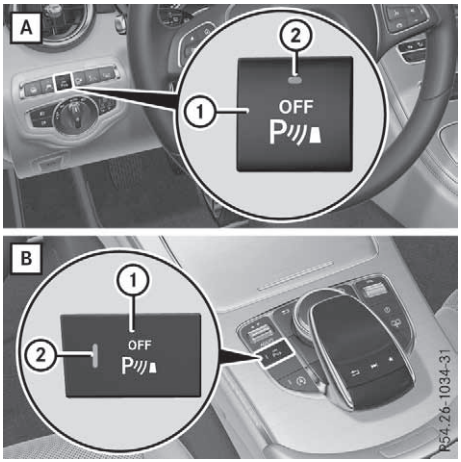

A Switches on the dashboard
B Switches on the centre console

① Activates/deactivates Parking Assist PARKTRONIC
② Indicator lamp

If indicator lamp ② lights up, Parking Assist PARKTRONIC is deactivated. Parking Pilot is then also not available.

Parking Assist PARKTRONIC is automatically activated when you turn the key to position 2 in the ignition lock.

Problems with Parking Assist PARKTRONIC

Problem	Possible causes/consequences and ▶ Solutions
Only the red segments on the Parking Assist PARKTRONIC warning displays are lit. You also hear a warning tone for approximately two seconds. Parking Assist PARKTRONIC is then deactivated and the indicator lamp on the PARKTRONIC button lights up.	Parking Assist PARKTRONIC is malfunctioning and has been deactivated. ▶ If problems persist, have Parking Assist PARKTRONIC checked at a qualified specialist workshop.
Only the red segments on the Parking Assist PARKTRONIC warning displays are lit. Parking Assist PARKTRONIC is then deactivated.	The Parking Assist PARKTRONIC sensors are dirty or malfunctioning. ▶ Clean the Parking Assist PARKTRONIC sensors (▷ page 351). ▶ Switch the ignition back on.
	The problem may be caused by an external source of radio or ultrasound waves. ▶ Check to see if Parking Assist PARKTRONIC functions in a different location.

Reversing camera

General notes

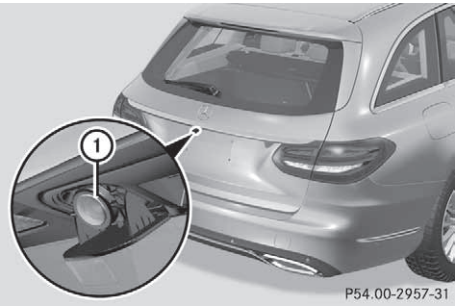

Reversing camera ① is a visual parking and manoeuvring aid. It shows the area behind the vehicle with guide lines on the multimedia system.

The area behind the vehicle is displayed as a mirror image, as in the rear-view mirror.

ⓘ The text shown on the multimedia system depends on the language setting. The following are examples of reversing camera displays on the multimedia system.

Important safety notes

The reversing camera is only an aid. It is not a substitute for your attention to the immediate surroundings. The responsibility for safe manoeuvring and parking remains with you. Make sure that there are no persons, animals or objects in the manoeuvring area while manoeuvring and parking in parking spaces.

The reversing camera will not function or will function only in a limited manner:

- if the tailgate is open
- in heavy rain, snow or fog
- at night or in very dark places
- if the camera is exposed to very bright light
- if the area is lit by fluorescent lamps or LED lighting (the display may flicker)
- if there is a sudden change in temperature, e.g. when driving into a heated garage in winter

- if the camera lens is dirty or obstructed, observe the notes on cleaning (▷ page 351)
- if the rear of your vehicle is damaged – in this case, have the camera position and setting checked at a qualified specialist workshop

The field of vision and other functions of the reversing camera may be restricted due to additional accessories on the rear of the vehicle (e.g. licence plate holder, rear-mounted bicycle rack).

The reversing camera is protected from raindrops and dust by a flap. When the reversing camera is activated, this flap opens.

The flap closes again when:

- you have finished the manoeuvring process
- you switch off the engine
- you open the luggage compartment

Observe the notes on cleaning (▷ page 351).

For technical reasons, the flap may remain open briefly after the reversing camera has been deactivated.

Activating/deactivating the reversing camera



P54.65-4899-31

▶ **To activate:** make sure that the Activation by R gear function is selected on the multimedia system (see Digital Owner's Manual).

▶ Engage reverse gear.
The reversing camera flap opens. The area behind the vehicle appears with guide lines on the multimedia system.
The image from the reversing camera is available throughout the manoeuvring process.

▶ **To switch the function mode for vehicles with trailer tow hitch:** using the controller, select symbol ① for the "Reverse parking" function or symbol ② for "Coupling up a trailer".
The symbol of the selected function is highlighted.

▶ **To deactivate:** Drive forwards at a speed greater than 12 km/h.

or

▶ **Vehicles with automatic transmission:** shift the transmission to position P.

Multimedia system display

The reversing camera may show a distorted view of obstacles, show them incorrectly or not at all. Obstacles are not shown by the reversing camera in the following locations:

- very close to the rear bumper
- under the rear bumper
- in the area immediately above the recessed tailgate handle

! Objects not at ground level may appear to be further away than they actually are, e.g.:

- the bumper of a parked vehicle
- the drawbar of a trailer
- the ball coupling of a trailer tow hitch
- the rear section of an HGV
- a slanted post

Use the guidelines only for orientation. Approach objects no further than the bottommost guideline.

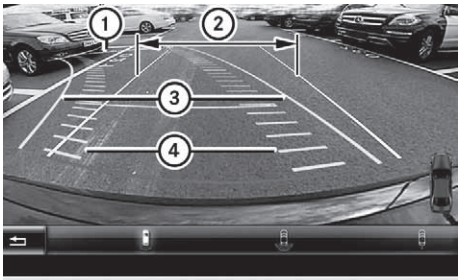

P54.65-4903-31

① Yellow guide line at a distance of approximately 4.0 m from the rear of the vehicle
② White guide lines without steering input, vehicle width including the exterior mirrors (static)

③ Yellow guide lines for vehicle width including the exterior mirrors, for current steering input (dynamic)
④ Yellow lanes marking the course the tyres will take for current steering input (dynamic)

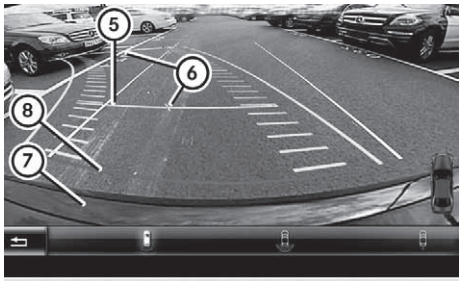

P54.65-4904-31

⑤ Yellow guide line at a distance of approximately 1.0 m from the rear of the vehicle
⑥ Vehicle centre axis (locating aid)
⑦ Bumper
⑧ Red guide line at a distance of approximately 0.30 m from the rear of the vehicle

If the transmission is shifted to position R, guide lines appear on the camera image.

The distance specifications apply only to objects that are at ground level.

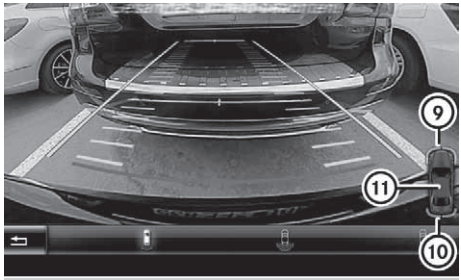

P54.65-5766-31

⑨ Front warning displays
⑩ Rear warning displays
⑪ Additional vehicle icon as Parking Assist PARKTRONIC measurement operational readiness indicator

Vehicles with Parking Assist PARKTRONIC: when Parking Assist PARKTRONIC is operational (▷ page 211), vehicle icon ⑪ appears on the multimedia system display. If the Parking Assist PARKTRONIC warning displays are active or light up, warning displays ⑨ and ⑩ are also active or light up correspondingly on the multimedia system display.

"Reverse parking" function

Reversing straight into a parking space without steering input

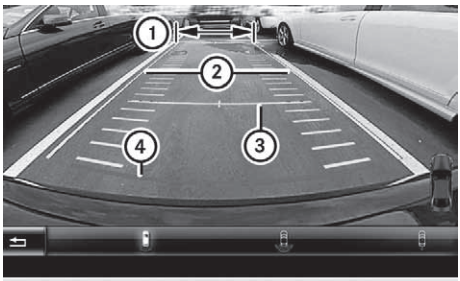

P54.65-4906-31

① White guide line without steering input – vehicle width including the exterior mirrors (static)
② Yellow guide lines for vehicle width including the exterior mirrors – dynamic for current steering input
③ Yellow guide line at a distance of approximately 1.0 m from the rear of the vehicle
④ Red guide line at a distance of approximately 0.30 m from the rear of the vehicle

▶ Make sure that the reversing camera is switched on (▷ page 214). The lane and guide lines appear.
▶ With the help of white guide line ①, check whether the vehicle will fit into the parking space.
▶ Using white guide line ① as a guide, carefully reverse until you reach the end position. Red guide line ④ is then at the end of the parking space. The vehicle is almost parallel in the parking space.

Reverse perpendicular parking with steering input

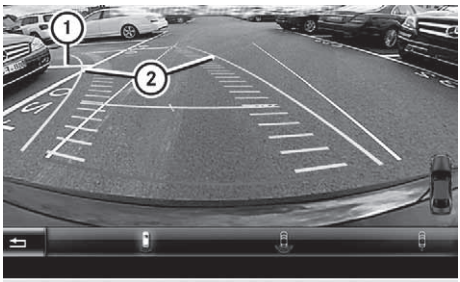

P54.65-4907-31

- ▶ After driving past the parking space, stop the vehicle, paying attention to road and traffic conditions.
- ▶ Make sure that the reversing camera is switched on (▷ page 214).
  The lane and guide lines appear in the camera image.
- ▶ While the vehicle is stationary, turn the steering wheel in the direction of the parking space until yellow guide lines ② reach parking space marking ①.
  Yellow guide lines ② dynamically adapt to the current steering input.
- ▶ Maintain the steering input and reverse carefully.

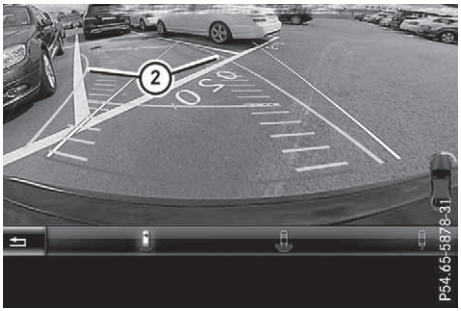

- ▶ Stop the vehicle when it is almost exactly in front of the parking space.

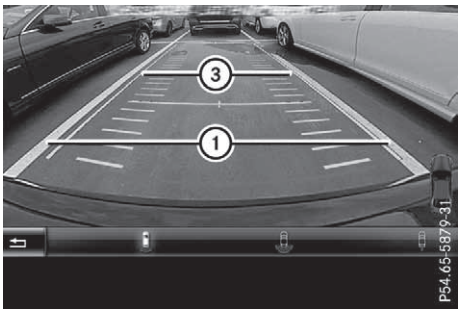

① Parking space markings
③ White guide lines – for current steering input

White guide lines ③ should be as close to parallel with parking space markings ① as possible.

- ▶ Turn the steering wheel to the centre position while the vehicle is stationary.

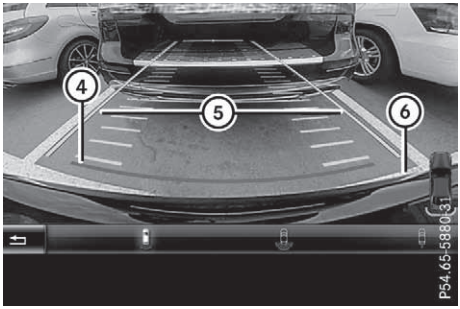

④ Red guide line at a distance of approximately 0.30 m from the rear of the vehicle
⑤ White guide lines – no steering input
⑥ End of parking space

- ▶ Reverse carefully until you have reached the end position.
  The red guide line ④ is then at the end of the parking space ⑥. The vehicle is almost parallel in the parking space.

"Coupling up a trailer" function

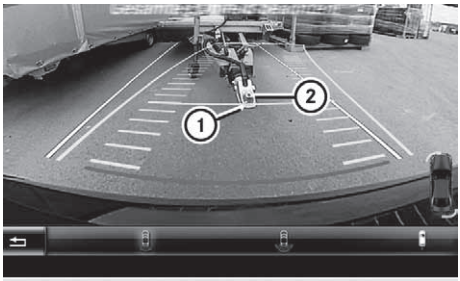

① Vehicle centre point on the yellow guide line at a distance of approximately 1.0 m from the rear of the vehicle
② Trailer drawbar

This function is available only on vehicles with a trailer tow hitch.

- ▶ Before coupling up a trailer, set the height of trailer drawbar ② so that it is slightly higher than the ball coupling.
- ▶ Position the vehicle centrally in front of trailer drawbar ②.

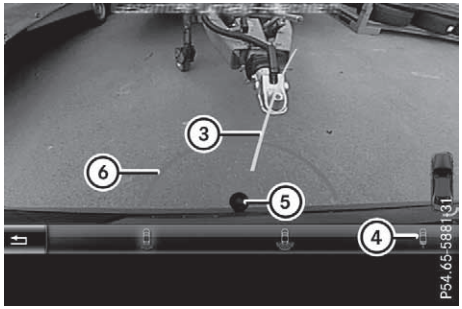

③ Trailer drawbar locating aid
④ Symbol for the "Coupling up a trailer" function
⑤ Ball coupling
⑥ Red guide line at a distance of approximately 0.30 m from the ball coupling

▶ Select symbol ④ using the multimedia system controller.
The "Coupling up a trailer" function is selected. The distance specifications now apply only to objects that are at the same level as the ball coupling.
▶ Reverse carefully, making sure that trailer drawbar locating aid ③ points approximately in the direction of trailer drawbar ②.
▶ Reverse carefully until trailer drawbar ② reaches red guide line ⑥.
The distance between trailer drawbar ② and red guide line ⑥ is now approximately 0.30 m.
▶ Couple up the trailer (▷ page 236).

"Wide-angle" function

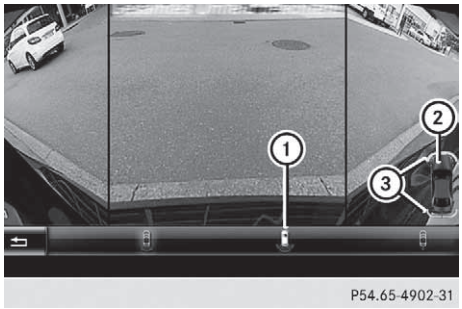

① Symbol for the wide-angle view function
② Own vehicle
③ Warning displays for Parking Assist PARKTRONIC

You can also use the reversing camera to select a wide-angle view.

When Parking Assist PARKTRONIC is operational (▷ page 211), a symbol for your own vehicle appears on the multimedia system display. If the Parking Assist PARKTRONIC warning displays are active, warning displays ③ light up on the multimedia system display in yellow or red accordingly.

Object detection

The reversing camera helps detect moving and stationary objects. If an object (person, vehicle or other obstacle) is detected, this object is marked with a bar. Objects located some distance away from the vehicle are marked with a yellow bar. If the distance to the object is very small, the bar is displayed in red.

Object detection works only in wide-angle view.

To use the function, it must be switched on via the multimedia system (see Digital Owner's Manual).

360° camera

General notes

The 360° camera is a camera system comprising four cameras.

The system evaluates images from the following cameras:

- reversing camera
- front camera
- two side cameras on the exterior mirrors

The cameras cover the immediate surroundings of the vehicle. The system assists you, e.g. when parking or at exits with reduced visibility.

You can show images from the 360° camera in full-screen mode or in seven different split-screen views on the multimedia system. A split-screen view also includes a top view of the vehicle. This view is calculated from the data supplied by the installed cameras (virtual camera).

The seven split-screen views are:

- top view and image from the reversing camera (130° viewing angle)
- top view and image from the front camera (130° viewing angle without displaying the maximum steering wheel angle)
- top view and enlarged rear view

- top view and enlarged front view
- top view and trailer view (vehicles with trailer tow hitch)
- top view and images from the rear-facing side cameras (rear wheel view)
- top view and images from the forward-facing side cameras (front wheel view)

Vehicles with automatic transmission: when the function is active and you shift the transmission from position D or R to N, the guide lines on the multimedia system are hidden.

When you shift between transmission positions D and R, you see the previously selected front or rear view.

Vehicles with manual transmission: when the function is active and you disengage reverse gear, the guide lines on the multimedia system are hidden.

When you shift between a forward gear and reverse gear, you see the previously selected front or rear view.

Distances measured by Parking Assist PARKTRONIC will also be displayed:

- as red or yellow brackets around the vehicle symbol in top view in split-screen mode or
- at the bottom right as red or yellow brackets around the vehicle symbol in full-screen mode

The line thickness and colour of the brackets show how far the vehicle is from an object.

- yellow brackets with thin lines: Parking Assist PARKTRONIC is active
- yellow brackets with normal lines: an object is present in close range of the vehicle
- red line: an object is present in the immediate close range of the vehicle

Important safety notes

The 360° camera is only an aid and may show a distorted view of obstacles, show them incorrectly or not show them at all. The 360° camera is not a substitute for attentive driving.

The responsibility for safe manoeuvring and parking remains with you. Make sure that there are no persons, animals or objects in the manoeuvring area while manoeuvring and parking in parking spaces.

You are responsible for safety at all times and must always pay attention to your immediate surroundings when parking and manoeuvring. This applies to the areas behind, in front of and beside the vehicle. You could otherwise endanger yourself and others.

The 360° camera will not function or will function only to a limited extent:

- if the doors are open
- if the exterior mirrors are folded in
- if the tailgate is open
- in heavy rain, snow or fog
- at night or in very dark places
- if the cameras are exposed to very bright light
- if the area is lit by fluorescent lamps or LED lighting (the display may flicker)
- if the camera lenses mist up, e.g. when you drive into a heated garage in winter, causing a rapid change in temperature
- if the camera lenses are dirty or covered
- if the vehicle components in which the cameras are fitted are damaged: in this case, have the camera position and setting checked at a qualified specialist workshop

Do not use the 360° camera under such circumstances. You could otherwise injure others or damage objects when parking the vehicle.

The guide lines on the multimedia system display show the distances to your vehicle. The distances apply only at road level.

In trailer mode, the guide lines are shown at the level of the trailer tow hitch.

The camera in the rear area is protected by a flap. This flap opens when the 360° camera is activated. Observe the notes on cleaning (▷ page 351). For technical reasons, the flap may remain open briefly after the 360° camera has been deactivated.

The field of vision and other functions of the camera system may be restricted due to additional attachments (e.g. licence plate holder, rear bicycle carrier).

On vehicles with height-adjustable suspension, due to the technical conditions, leaving the standard height can result in the following:

- inaccuracies in the guide lines
- inaccuracies in the display of generated images (top view)

Activation conditions

The image from the 360° camera appears when

- the multimedia system is switched on
- the 360° camera function is switched on

If you are driving at more than a moderate speed and switch on the 360° camera, a warning message appears.

The warning message disappears in the following situations:

- you are again driving at a moderate speed, the 360° camera is then activated
- the message is confirmed with the ⮌ button

Switching the 360° camera on/off with the button

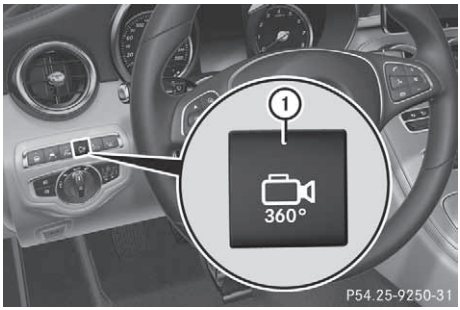

▶ **To switch on:** press button ①.
Vehicles with automatic transmission: depending on whether transmission position D or R is selected, the following appears:
Vehicles with manual transmission: the following appears depending on whether reverse gear is selected or not
- a split screen with top view and the image from the front camera or
- a split screen with top view and the image from the reversing camera

▶ **To switch off:** press button ① again.

Switching on the 360° camera using reverse gear

You can show images from the 360° camera automatically by engaging reverse gear.

▶ Make sure that the Activation by R gear function is selected on the multimedia system (see the Digital Owner's Manual).

▶ **To show the 360° camera image:** engage reverse gear.
The multimedia system shows the area behind the vehicle in split-screen mode. You see the top view of the vehicle and the image from the reversing camera.

You cannot stop the 360° camera display if reverse gear is engaged.

Selecting the split-screen view or full-screen mode

Switching between split screen views:

▶ To switch to the line with the vehicle icons: slide ↑◎ the controller.

▶ To select a vehicle icon: turn the controller.

Switching to full-screen mode:

▶ Turn and press 180° view with the controller.

The full-screen option is available only in the following views:

- top view with image from the reversing camera
- top view with image from the front camera

Multimedia system display

Important safety notes

The camera system may show a distorted view of obstacles, show them incorrectly or not show them at all. Obstacles in the following locations are not shown by the system:

- under the front and rear bumpers
- very close to the front and rear bumpers
- in the area immediately above the recessed tailgate handle
- very close to the exterior mirrors
- in the transitional areas between the various cameras in the virtual top view

! Objects not at ground level may appear to be further away than they actually are, e.g.:
- the bumper of a parked vehicle
- the drawbar of a trailer
- the ball coupling of a trailer tow hitch
- the rear section of an HGV
- a slanted post

Use the guidelines only for orientation. Approach objects no further than the bottom-most guideline.

Top view with image from the reversing camera

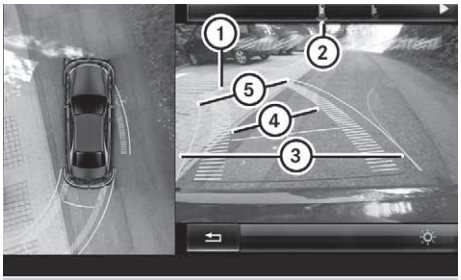

P54.65-4871-31

① Yellow guide line at a distance of approximately 4.0 m from the rear of the vehicle
② Symbol for the split-screen setting with top view and reversing camera image
③ Guide lines for the maximum steering input
④ Yellow lanes marking the course the tyres will take for current steering input (dynamic)
⑤ Yellow guide lines for vehicle width including the exterior mirrors – dynamic for current steering input

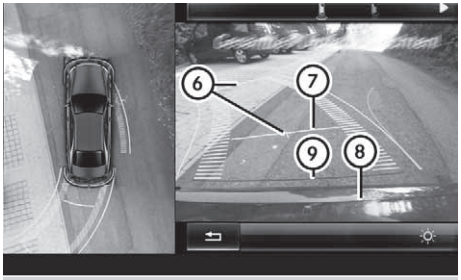

P54.65-4872-31

⑥ Vehicle centre axis (locating aids)
⑦ Yellow guide line at a distance of approximately 1.0 m from the rear of the vehicle
⑧ Bumper
⑨ Red guide line at a distance of approximately 0.30 m from the rear of the vehicle

When reverse gear is selected, guide lines appear on the camera image.

The distance specifications apply only to objects that are at ground level.

Top view with image from the front camera

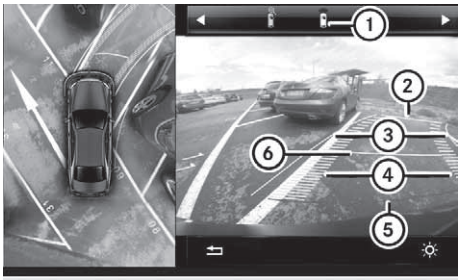

P54.65-4869-31

① Symbol for the split-screen setting with top view and front camera image
② Yellow guide line at a distance of approximately 4.0 m from the front of the vehicle
③ Yellow guide lines for vehicle width including the exterior mirrors, for current steering input (dynamic)
④ Yellow lanes marking the course the tyres will take for current steering input (dynamic)
⑤ Red guide line at a distance of approximately 0.30 m from the front of the vehicle
⑥ Yellow guide line at a distance of approximately 1.0 m from the front of the vehicle

Top view and enlarged rear view

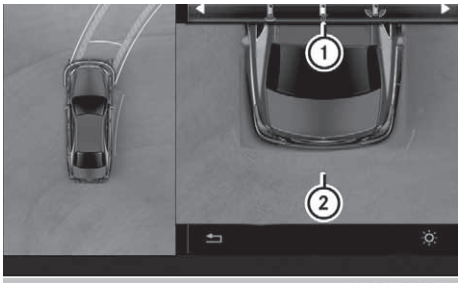

P54.65-4874-31

① Symbol for the split-screen setting with top view and reversing camera image enlarged
② Red guide line at a distance of approximately 0.30 m from the rear of the vehicle

This view assists you in estimating the distance to the vehicle behind you.

ⓘ This setting can also be selected as an enlarged front view.

Top view with image from the side cameras

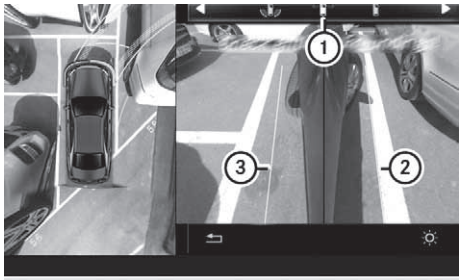

P54.65-4868-31

① Symbol for the top view setting with the forward-facing side camera image
② Yellow guide line for the vehicle width including the exterior mirror (right side of vehicle)
③ Yellow guide line for the vehicle width including the exterior mirror (left side of vehicle)

ⓘ You can also select the side camera setting for the rear-facing view.

"Coupling up a trailer" function

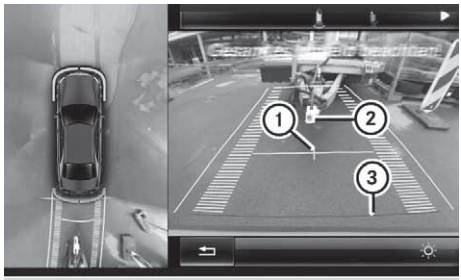

P54.65-4877-31

① Vehicle centre point on the yellow guide line at a distance of approximately 1.0 m from the rear of the vehicle
② Trailer drawbar
③ Red guide line at a distance of approximately 0.30 m from the rear of the vehicle

▶ Set the height of trailer drawbar ② so that it is slightly higher than the ball coupling.
▶ Position the vehicle centrally in front of trailer drawbar ②.

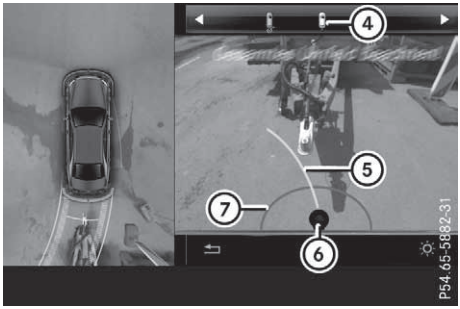

For technical reasons, the ball coupling ⑥ of the trailer tow hitch on the multimedia system display is either only partially visible or not visible at all.

▶ Select symbol ④ using the controller. The "Coupling up a trailer" function is selected. The distance specifications now apply only to objects that are at the same level as the ball coupling.
▶ Reverse carefully, making sure that trailer drawbar locating aid ⑤ points approximately in the direction of the trailer drawbar.
▶ Reverse carefully until the trailer drawbar reaches red guide line ⑦. The distance between the trailer drawbar and red guide line ⑦ is now approximately 0.30 m.
▶ Couple up the trailer (▷ page 236).

The lines are shown at the level of the trailer tow hitch.

180° view

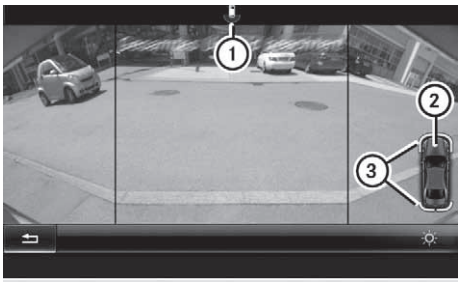

P54.65-4870-31

① Symbol for the full-screen setting with the reversing camera image
② Own vehicle
③ Warning displays for Parking Assist PARKTRONIC

ⓘ 180° view can also be selected as front view.

Select this view when you are driving out of an exit and the view of crossing traffic is restricted, for example.

If you select the [⮌] symbol on the display and confirm with the controller, the split-screen view appears.

Stopping the 360° camera display

▶ Drive forwards at a speed greater than 10 km/h.

or

▶ **Vehicles with automatic transmission:** shift the transmission to position [P]. The 360° camera display is stopped.

The view that was active before the 360° camera was displayed appears on the multimedia system display. You can stop the 360° camera from the split-screen view by selecting the [⮌] symbol on the display and confirming with the controller.

You cannot stop the 360° camera display if transmission position [R] is selected.

ATTENTION ASSIST

General notes

ATTENTION ASSIST helps you during long, monotonous journeys such as on motorways and trunk roads. It is active in the 60 km/h to 200 km/h speed range. If ATTENTION ASSIST detects typical indicators of fatigue or increasing lapses in concentration on the part of the driver, it suggests taking a break.

Important safety notes

ATTENTION ASSIST is only an aid. It may not always detect fatigue or lapses in concentration until too late, or may not detect them at all. The system is not a substitute for a well-rested and attentive driver.

The functionality of ATTENTION ASSIST is restricted, and warnings may be delayed or not occur at all in the following situations:

- the length of the journey is less than approximately 30 minutes
- if the road condition is poor, e.g. if the surface is uneven or contains potholes
- in the event of strong crosswinds
- if you have adopted a sporty driving style with high cornering speeds or high rates of acceleration
- if you are predominantly driving at a speed below 60 km/h or above 200 km/h
- if you are driving with the Steering Pilot of Distance Pilot DISTRONIC activated
- if the time has been set incorrectly
- in active driving situations, such as when you change lanes or change your speed

The ATTENTION ASSIST tiredness assessment is deleted and restarted when you continue the journey in the following situations:

- you switch off the engine
- you take off your seat belt and open the driver's door, e.g. for a change of drivers or to take a break

Displaying the attention level



On the Assistant menu (▷ page 253) of the on-board computer, you can call up the current status information.

▶ Select the assistant display for ATTENTION ASSIST using the on-board computer (▷ page 252).

The following information appears:

- the length of the journey since the last break
- the attention level determined by ATTENTION ASSIST (Attention level), shown on a bar display in five levels from high to low
- if ATTENTION ASSIST is unable to calculate the attention level and cannot issue a warning, the System suspended message appears. The bar display then changes what is shown, e.g. if you are driving at a speed below 60 km/h or above 200 km/h

Activating ATTENTION ASSIST

▶ Activate ATTENTION ASSIST via the on-board computer (▷ page 255).
The system determines the attention level of the driver depending on the setting selected:

If Standard is selected: the sensitivity with which the system determines the attention level is set to normal.

If Sensitive is selected: the sensitivity is set higher. The attention level detected by ATTENTION ASSIST is adapted accordingly and the driver is warned earlier.

When ATTENTION ASSIST is deactivated, the OFF symbol appears on the multifunction display on the assistant display when the engine is running.

When ATTENTION ASSIST has been deactivated, it is automatically reactivated after the engine has been switched off. The sensitivity selected corresponds to the last selection activated (standard/sensitive).

Warning on the multifunction display

If fatigue or increasing lapses in concentration are detected, a warning appears on the multifunction display: ATTENTION ASSIST Take a break!.

In addition to the message shown on the multifunction display, you will then hear a warning tone.

▶ If necessary, take a break.

▶ Confirm the message by pressing the OK button on the steering wheel.

On long journeys, take regular breaks that allow for adequate refreshment. If you do not take a break and ATTENTION ASSIST continues to detect increasing lapses in concentration, you will be warned again after 15 minutes at the earliest. This will happen only if ATTENTION ASSIST still detects typical indicators of fatigue or increasing lapses in concentration.

Vehicles with COMAND Online multimedia system: if a warning appears on the multifunction display, the multimedia system offers to search for a service station. You can select a service station and you will then be navigated to this service station. This function can be activated or deactivated in COMAND Online multimedia system (see Digital Owner's Manual).

Traffic Sign Assist

General notes

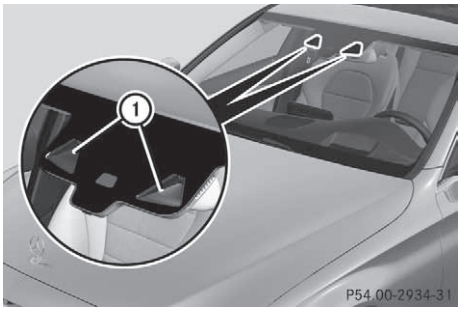

Traffic Sign Assist displays the maximum speed permitted and overtaking restrictions to the driver on the instrument cluster. Driving onto a section of road in the wrong direction triggers a warning. Traffic Sign Assist detects traffic signs with multifunction camera ① attached at the top of the windscreen. The data and general traffic regulations stored in the navigation system are also used to determine the current speed limit.

If a traffic sign that is relevant to your vehicle is passed, the display of the speed limits and overtaking restrictions is updated.

The display can also be updated without a visible traffic sign in the following situations:

- the vehicle changes roads, e.g. motorway exit or slip road
- a village or town boundary that is stored in the digital map is passed
- the last traffic sign detected by the camera has not been repeated

If a sign indicating the end of a restriction (speed limit or overtaking restriction) is passed, the sign appears for five seconds. The currently applicable traffic regulation continues to be shown in the assistance graphic (▷ page 252).

The camera also detects traffic signs with a restriction indicated by an additional sign (e.g. in wet conditions).

The traffic signs are displayed on the instrument cluster with the restrictions only in the following situations:

- the regulation must be observed with the restriction, or
- Traffic Sign Assist is unable to determine whether the restriction applies

If Traffic Sign Assist is unable to determine a maximum permissible speed from any of the available sources, no speed limit is displayed on the instrument cluster either.



Traffic Sign Assist is not available in all countries. In this case, the display ① appears in the speedometer.

Important safety notes

Traffic Sign Assist is only an aid and is not always able to correctly display speed limits and overtaking restrictions. Traffic signs always have priority over the Traffic Sign Assist display.

The system may be either functionally impaired or temporarily unavailable in the following situations:

- visibility is poor, e.g. due to snow, rain, fog or spray
- glare, e.g. from the sun being low in the sky
- dirt, ice or misting on the windscreen in the vicinity of the camera
- traffic signs are hard to detect, e.g. due to dirt, ice, snow
- the traffic signs are insufficiently lit at night
- signs are ambiguous, e.g. traffic signs on construction sites or in adjacent lanes
- the information in the digital street map of the navigation system is incorrect or out of date

Switching the message function on/off

If you have activated the Traffic Sign Assist message function in the on-board computer, the traffic regulations (speed limits and overtaking restrictions) are displayed on the instrument cluster for five seconds respectively. The wrong-way warning and the traffic sign display for speed limits and overtaking restrictions remain active even when the display has been deactivated.

▶ Switch on the Traffic Sign Assist message function via the on-board computer (▷ page 254).

Instrument cluster display

Showing the assistance graphic

▶ Call up the assistant display function via the on-board computer (▷ page 252). Detected traffic signs appear on the instrument cluster.

Speed limit with unknown restriction

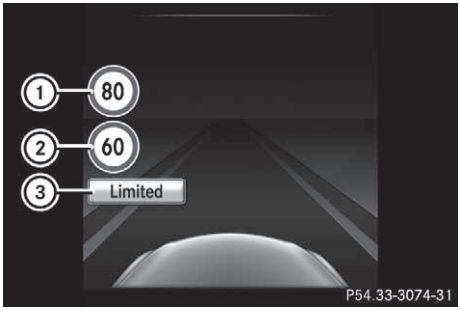

① Maximum permissible speed
② Maximum permissible speed for vehicles for which the restriction in the additional sign is relevant
③ Additional sign for unknown restriction

A maximum permissible speed of 80 km/h (80 mph) and a speed limit of 60 km/h (60 mph) with an unknown restriction apply.

The unit for the speed limit (km/h or mph) depends on the country in which you are driving. It is generally neither shown on the traffic sign nor on the instrument cluster but must be taken into account on observance of the maximum permissible speed.

No entry (wrong-way warning)



A warning message ① is displayed on the instrument cluster if Traffic Sign Assist detects that you are passing a “no entry” sign and you are driving in the wrong direction. You will then also hear a warning tone. You should immediately check your direction of travel in order to avoid danger to yourself and other road users.

Lane Tracking package

General notes

The Lane Tracking package consists of Blind Spot Assist (▷ page 225) and Lane Keeping Assist (▷ page 227).

Blind Spot Assist

General notes

Blind Spot Assist monitors the areas on either side of the vehicle that are not visible to the driver with two lateral, rear-facing radar sensors. A warning lamp lights up on the exterior mirrors and draws your attention to vehicles detected in the monitored area. If you then switch on the corresponding turn signal to change lanes, you will also receive a visual and audible warning.

Blind Spot Assist supports you from a speed of approximately 30 km/h.

Important safety notes

⚠ WARNING

Blind Spot Assist does not react to vehicles:

- overtaken too closely on the side, placing them in the blind spot area
- when the difference in the speed of approach and overtaking is too great

As a result, Blind Spot Assist cannot warn drivers in these situations. There is a risk of an accident.

Always pay careful attention to the traffic situation and maintain a safe distance at the side of the vehicle.

Blind Spot Assist is only an aid. It may fail to detect some vehicles and is not a substitute for attentive driving. Always ensure that there is sufficient distance to the side for other road users and obstacles.

Radar sensors

The radar sensors for Blind Spot Assist are integrated into the rear bumper. Make sure that the bumpers are free from dirt, ice or slush. The sensors must not be covered, e.g. by cycle racks or overhanging loads. Following a severe impact or in the event of damage to the bumpers, have the function of the radar sensors checked at a qualified specialist workshop. Blind Spot Assist may no longer work properly in such cases.

Monitoring range

In particular, the detection of obstacles can be impaired in the following situations:

- dirt on the sensors or obscured sensors
- poor visibility, e.g. due to fog, heavy rain, snow or spray
- narrow vehicles, e.g. motorcycles or bicycles
- very wide lanes
- narrow lanes
- vehicles not driving in the middle of their lane
- barriers or other road boundaries

Vehicles in the monitoring range are then not indicated.

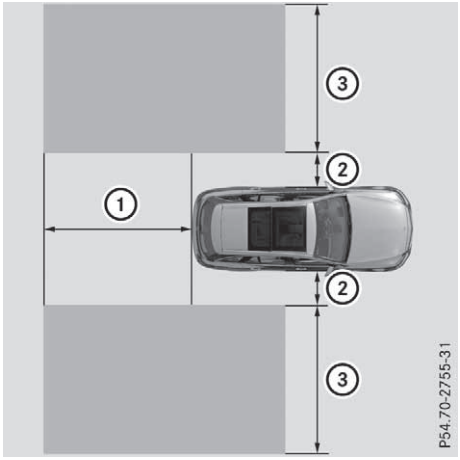

At a distance of around 0.5 m ② from the vehicle, Blind Spot Assist monitors the area up to 3.0 m next to ③ and behind ① your vehicle, as shown in the picture.

If the lanes are narrow, vehicles driving in the lane beyond the lane next to your vehicle may be indicated, especially if the vehicles are not driving in the middle of their lane. This may be the case if the vehicles are driving on the inner side of their lane.

Due to the nature of the system:

- warnings may be issued in error when driving close to crash barriers or similar solid boundaries
- warnings may be interrupted when driving alongside long vehicles, e.g. lorries, for a prolonged time

Warning lamp

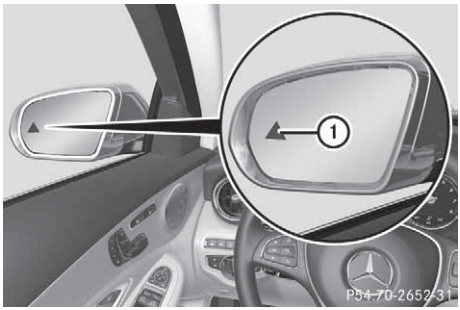

① Warning lamp

Blind Spot Assist is not active at speeds below approximately 30 km/h. Vehicles in the monitoring range are then not indicated.

If a vehicle is detected within the blind spot monitoring range at speeds of more than approximately 30 km/h, warning lamp ① on the corresponding side lights up red. This warning lamp always lights up when a vehicle enters the blind spot monitoring range from behind or from the side. When you overtake a vehicle, the warning occurs only if the difference in speed is less than 12 km/h.

If you select reverse gear, Blind Spot Assist is not operational.

The brightness of the warning lamps is automatically adapted to the brightness of the surroundings.

Collision warning

If a vehicle is detected in the blind spot monitoring range and you switch on the corresponding turn signal, a double warning tone sounds. The red warning lamp flashes on the relevant exterior mirror. If the turn signal remains switched on, detected vehicles are indicated by the flashing of the red warning lamp on the exterior mirror. There are no further warning tones.

Activating Blind Spot Assist

▶ Make sure that Blind Spot Assist is activated on the on-board computer (▷ page 255).

▶ Turn the key to position 2 in the ignition lock.
The red warning lamps on the exterior mirrors light up until the engine is started.

Assistant display

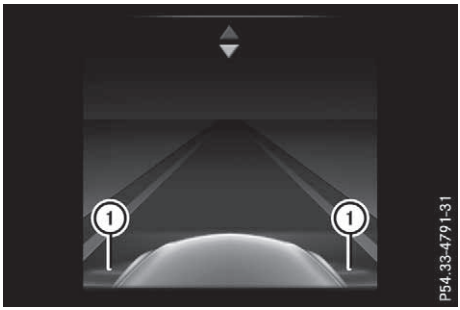

When Blind Spot Assist is activated, grey radar waves propagating backwards appear next to the vehicle on the assistant display on the multifunction display (▷ page 252). Above a speed of 30 km/h, the colour of the radar waves on the assistant display changes to green ①. Blind Spot Assist is then ready for use.

Towing a trailer

If you couple up a trailer, make sure that you have correctly established the electrical connection. This can be accomplished by checking the trailer lighting. Blind Spot Assist is then deactivated. The Blind Spot Assist not available when towing a trailer See Owner's Manual message appears on the multifunction display.

Lane Keeping Assist

General notes

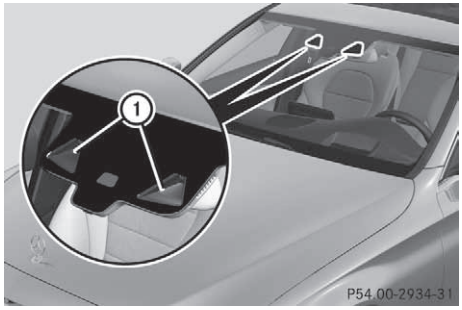

Lane Keeping Assist monitors the area in front of your vehicle by means of multifunction camera ① attached at the top of the windscreen. Lane Keeping Assist detects lane markings on the road and can warn you before you leave your lane unintentionally.

This function is available in a speed range between 60 km/h and 200 km/h.

A warning may be given if a front wheel passes over a lane marking. It will warn you by means of intermittent vibration in the steering wheel for up to 1.5 seconds.

Important safety notes

⚠ WARNING

Lane Keeping Assist cannot always clearly detect lane markings.

In such cases, Lane Keeping Assist can:

- issue an unnecessary warning
- not issue a warning

There is a risk of an accident.

Always pay particular attention to the traffic situation and keep within the lane, especially if Lane Keeping Assist alerts you.

⚠ WARNING

The Lane Keeping Assist warning does not return the vehicle to the original lane. There is a risk of an accident.

Always steer, apply the brakes or accelerate the vehicle yourself, especially if Lane Keeping Assist alerts you.

Lane Keeping Assist can neither reduce the risk of an accident if you fail to adapt your driving style nor override the laws of physics. Lane Keeping Assist cannot take into account road, weather or traffic conditions. Lane Keeping Assist is only an aid. You are responsible for the distance to the vehicle in front, for vehicle speed, for braking in good time and for staying in lane.

Lane Keeping Assist does not keep your vehicle in its lane.

The system may be impaired or may not function in the following situations:

- poor visibility, e.g. due to insufficient illumination of the road, or due to snow, rain, fog or spray
- glare, e.g. from oncoming traffic, the sun or reflection from other vehicles (e.g. if the road surface is wet)
- the windscreen is dirty, misted up, damaged or covered, for instance by a sticker, in the vicinity of the camera
- no or several, unclear lane markings are present for one lane, e.g. in a construction area
- the lane markings are worn away, dark or covered up, e.g. by dirt or snow
- the distance to the vehicle in front is so small that the lane markings cannot be detected
- the lane markings change quickly, e.g. lanes branch off, cross one another or merge
- the road is very narrow and winding
- there are highly variable shade conditions on the road surface

Activating/deactivating Lane Keeping Assist

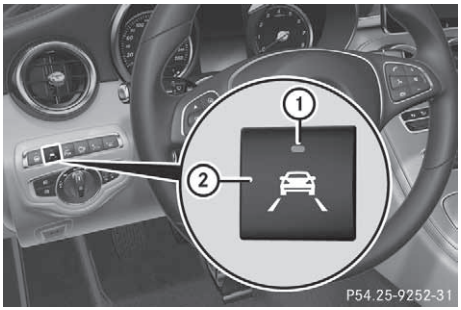

▶ **To activate:** press button ②.
Indicator lamp ① lights up. The message Lane Keeping Assist on appears on the multifunction display. If all conditions have been satisfied, there may be a warning.
If you drive at speeds above 60 km/h and lane markings are detected, the lines in the assistance graphic (▷ page 252) are shown in green. Lane Keeping Assist is ready for use.

▶ **To deactivate:** press button ②.
Indicator lamp ① goes out. Lane Keeping Assist is deactivated. The message Lane Keeping Assist off appears on the multifunction display.

Selecting Standard or Adaptive setting

▶ One the Assistance menu on the on-board computer, select the function Lane Keeping Assist(▷ page 255).

▶ Select setting Standard or Adaptive.

Standard

When Standard is selected, no warning vibration occurs if:

- you have switched on the turn signal. In this case, the warnings are suppressed for a certain period of time.
- a driving safety system such as ABS, BAS or ESP® intervenes.

Adaptive

When Adaptive is selected, no warning vibration occurs if:

- you have switched on the turn signal – in this case, the warnings are suppressed for a certain period of time.
- a driving safety system such as ABS, BAS or ESP® intervenes
- you accelerate hard, e.g. kickdown
- you brake hard
- you steer actively, e.g. swerve to avoid an obstacle or change lane quickly
- you cut the corner on a sharp bend

To ensure that you are warned only when necessary and in good time if you cross the lane marking, the system detects certain conditions and warns you accordingly.

The warning vibration occurs earlier in the following situations if:

- you approach the outer lane marking on a bend
- the road has very wide lanes, e.g. a motorway
- the system detects solid lane markings

The warning vibration occurs later in the following situations if:

- the road has narrow lanes
- you cut the corner on a bend

Driving Assistance Plus package

General notes

The Driving Assistance Plus package consists of Distance Pilot DISTRONIC (▷ page 192), Active Blind Spot Assist (▷ page 228) and Active Lane Keeping Assist (▷ page 231).

Active Blind Spot Assist

General notes

Using two lateral, rear-facing radar sensors, Active Blind Spot Assist monitors the areas on either side of the vehicle that are not visible to the driver. A warning lamp lights up on the exterior mirrors and draws your attention to vehicles detected in the monitored area. If you then switch on the corresponding turn signal to change lanes, you will also receive a visual and audible warning. If a risk of side impact is detected, a course-corrective brake application may help you avoid a collision. Active Blind Spot Assist evaluates the free space in the direction of travel and to the side before making a course-correcting brake application. For this, Active Blind Spot Assist uses the forward-facing radar sensors.

Active Blind Spot Assist supports you from a speed of approximately 30 km/h.

Important safety notes

Active Blind Spot Assist is only an aid and is not a substitute for attentive driving.

⚠ WARNING

Active Blind Spot Assist does not react to vehicles:

- overtaking too closely on the side, placing them in the blind spot area
- if the difference in the speed of approach and overtaking is too great

As a result, Active Blind Spot Assist may neither give warnings nor intervene in such situations. There is a risk of an accident.

Always pay careful attention to the traffic situation and maintain a safe distance at the side of the vehicle.

Radar sensors

The Active Blind Spot Assist radar sensors are integrated in the front and rear bumpers and behind a cover in the radiator trim. Make sure that the bumpers and the cover in the radiator trim are free of dirt, ice or slush. The rear sensors must not be covered, e.g. by bicycle racks or overhanging loads. Following a severe impact or in the event of damage to the bumpers, have the function of the radar sensors checked at a qualified specialist workshop. Active Blind Spot Assist might otherwise no longer function properly.

Monitoring range

⚠ WARNING

Active Blind Spot Assist does not detect all traffic situations and road users. There is a risk of an accident.

Always make sure that there is sufficient distance to the side for other traffic or obstacles.

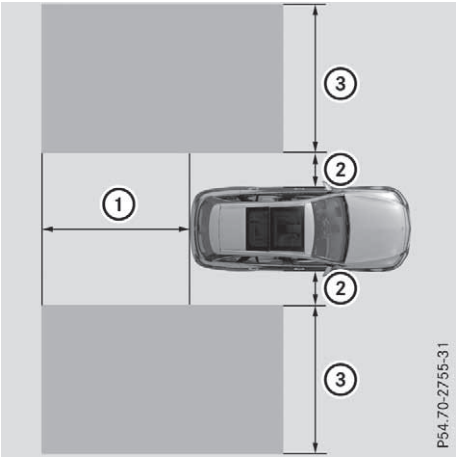

At a distance of approximately 0.5 m ② from the vehicle, Active Blind Spot Assist monitors the area up to 3.0 m next to ③ and behind ① your vehicle, as shown in the picture.

The detection of vehicles may be impaired in the following situations:

- dirt on the sensors or obscured sensors
- poor visibility, e.g. due to rain, snow or spray

Vehicles in the monitoring range are then not indicated.

Active Blind Spot Assist may not detect narrow vehicles, such as motorcycles or bicycles, or may detect them too late.

If the lanes are narrow, vehicles driving in the lane beyond the lane next to your vehicle may be indicated, especially if the vehicles are not driving in the middle of their lane. This may be the case if vehicles are driving on the inner side of their lane.

Due to the nature of the system:

- warnings may be issued in error when driving close to crash barriers or similar solid boundaries
- warnings may be interrupted when you are driving alongside particularly long vehicles, such as lorries, for a prolonged time

Warning lamp

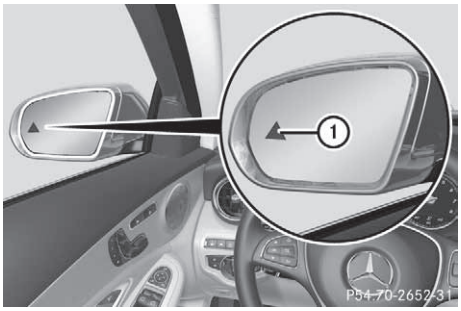

① Warning lamp

Active Blind Spot Assist is not operational at speeds of below approximately 30 km/h. Vehicles in the monitoring range are then not indicated.

If a vehicle is detected within the blind spot monitoring range at speeds of more than approximately 30 km/h, warning lamp ① on the corresponding side lights up red. This warning lamp always lights up when a vehicle enters the blind spot monitoring range from behind or from the side. When you overtake a vehicle, the warning occurs only if the difference in speed is less than 12 km/h.

If you select the reverse gear, Active Blind Spot Assist is not operational.

The brightness of the warning lamps is automatically adapted to the brightness of the surroundings.

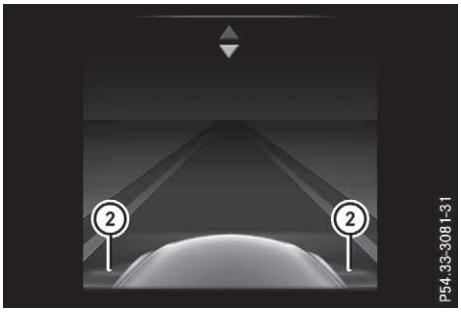

When Active Blind Spot Assist is activated, grey radar waves propagating rearwards appear next to the vehicle on the assistant display on the multifunction display. Above a speed of 30 km/h, the colour of the radar waves on the assistant display changes to green ②. Active Blind Spot Assist is then ready for use.

Visual and audible collision warning

If you switch on the turn signals to change lanes and a vehicle is detected in the side monitoring range, you receive a visual and audible collision warning. You will then hear a double warning tone and red warning lamp ① flashes. If the turn signal remains on, detected vehicles are indicated by the flashing of red warning lamp ①. There are no further warning tones.

Course-correcting brake application

If Active Blind Spot Assist detects a risk of a side impact in the monitoring range, a course-correcting brake application is carried out. This is designed to help you avoid a collision.

⚠ WARNING

A course-correcting brake application cannot always prevent a collision. There is a risk of an accident.

Always steer, brake or accelerate yourself, especially if Active Blind Spot Assist warns you or makes a course-correcting brake application. Always maintain a safe distance at the sides.

If a course-correcting brake application occurs, red warning lamp ① flashes on the exterior mirror and a double warning tone sounds. In addition, a display underlining the danger of a side collision appears on the multifunction display.

In very rare cases, the system may make an inappropriate brake application. A course-correcting brake application may be interrupted at any time by countersteering slightly or accelerating.

The course-correcting brake application is available in the speed range between 30 km/h and 200 km/h.

Either a course-correcting brake application appropriate to the driving situation, or none at all, may occur in the following situations:

- vehicles or obstacles, e.g. crash barriers, are located on both sides of your vehicle
- a vehicle approaches too closely on the side
- you have adopted a sporty driving style with high cornering speeds
- you brake or accelerate significantly
- a driving safety system engages, such as ESP® or PRE-SAFE® Brake

- ESP® is deactivated
- a loss of tyre pressure or a defective tyre is detected

Activating Active Blind Spot Assist

▶ Make sure that Active Blind Spot Assist is activated on the on-board computer (▷ page 255).

▶ Switch on the ignition.
Warning lamps ① on the exterior mirrors light up red for approximately 1.5 seconds.

Grey radar waves propagating backwards ② appear next to the vehicle on the assistant display on the multifunction display.

Above a speed of 30 km/h, the colour of the radar waves on the assistant display changes to green ②. Active Blind Spot Assist is then ready for use.

Towing a trailer

If you couple up a trailer, make sure that you have correctly established the electrical connection. This can be accomplished by checking the trailer lighting. Active Blind Spot Assist is then deactivated. The radar waves ② next to the vehicle are hidden on the assistant display. The `Active Blind Spot Assist not available when towing a trailer See Owner's Manual` message appears on the multifunction display.

Active Lane Keeping Assist

General notes

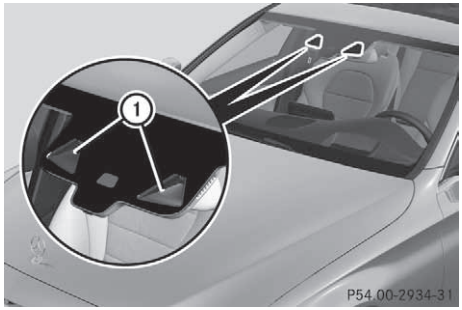

Active Lane Keeping Assist monitors the area in front of your vehicle by means of multifunction camera ① at the top of the windscreen. Various different areas to the front, rear and side of your vehicle are also monitored with the aid of the radar sensor system. Active Lane Keeping Assist detects lane markings on the road and can warn you before you leave your lane unintentionally. If you do not react to the warning, a lane-correcting brake application can bring the vehicle back into the original lane.

This function is available in a speed range between 60 km/h and 200 km/h.

Important safety notes

Active Lane Keeping Assist can neither reduce the risk of an accident if you fail to adapt your driving style nor override the laws of physics. Active Lane Keeping Assist cannot take account of road and weather conditions. It may not recognise certain road and traffic conditions. Active Lane Keeping Assist is only an aid. You are responsible for the distance to the vehicle in front, for vehicle speed, for braking in good time and for staying in lane.

Active Lane Keeping Assist cannot continuously keep your vehicle in its lane.

⚠ WARNING

Active Lane Keeping Assist cannot always clearly detect lane markings.

In such cases, Active Lane Keeping Assist can:

- give an unnecessary warning and then make a course-correcting brake application to the vehicle
- neither give a warning nor intervene

There is a risk of an accident.

Always pay particular attention to the traffic situation and keep within the lane, especially if Active Lane Keeping Assist alerts you. Terminate the intervention in a non-critical driving situation.

The system may be impaired or may not function in the following situations:

- poor visibility, e.g. due to insufficient illumination of the road, or due to snow, rain, fog or spray
- glare, e.g. from oncoming traffic, the sun or reflection from other vehicles (e.g. if the road surface is wet)
- the windscreen is dirty, misted up, damaged or covered, for instance by a sticker, in the vicinity of the camera

- the radar sensors on the front or rear bumpers or the radiator trim are dirty, e.g. obscured by snow
- no or several, unclear lane markings are present for one lane, e.g. in a construction area
- the lane markings are worn away, dark or covered up, e.g. by dirt or snow
- the distance to the vehicle in front is so small that the lane markings cannot be detected
- the lane markings change quickly, e.g. lanes branch off, cross one another or merge
- the road is very narrow and winding
- there are highly variable shade conditions on the road surface

If no vehicle is detected in the adjacent lane and broken lane markings are detected, no lane-correcting brake application is made.

Warning vibration in the steering wheel

A warning may be given if a front wheel passes over a lane marking. It will warn you by means of intermittent vibration in the steering wheel for up to 1.5 seconds.

Lane-correcting brake application

If you leave your lane, under certain circumstances, the vehicle will brake briefly on one side. This is intended to help you return the vehicle to the original lane.

⚠ WARNING

A lane-correcting brake application cannot always bring the vehicle back into the original lane. There is a risk of an accident.

Always steer, brake or accelerate yourself, especially if Active Lane Keeping Assist warns you or makes a lane-correcting brake application.



If a lane-correcting brake application occurs, display ① appears on the multifunction display. The brake application also slightly reduces driving speed.

A lane-correcting brake application can be made after the car has passed over a lane marking detected as being solid or broken. Before this, a warning must have been issued by means of intermittent vibration in the steering wheel. In addition, a lane with lane markings on both sides must be detected.

In the case of a broken lane marking being detected, a lane-correcting brake application can be made only if a vehicle has been detected in the adjacent lane. Oncoming vehicles, overtaking vehicles and vehicles in adjacent lanes can be detected.

A further lane-correcting brake application can occur only after your vehicle has returned to the original lane.

No lane-correcting brake application occurs in the following situations:

- you clearly and actively steer, brake or accelerate
- you cut the corner on a sharp bend
- you have switched on the turn signal
- a driving safety system engages, such as ESP®, PRE-SAFE® Brake or Active Blind Spot Assist
- you have adopted a sporty driving style with high cornering speeds or high rates of acceleration
- ESP® is deactivated
- the transmission is not in position D
- on vehicles with a trailer tow hitch, the electrical connection to the trailer has been correctly established
- a loss of tyre pressure or a defective tyre has been detected and displayed
- an obstacle has been detected in the lane in which you are driving

Active Lane Keeping Assist may not detect other road users or traffic situations. An inappropriate brake application may be interrupted at any time in the following situations:

- you steer slightly in the opposite direction
- you switch on the turn signal
- you brake or accelerate significantly

A lane-correcting brake application is interrupted automatically in the following situations:

- a driving safety system engages, such as ESP®, PRE-SAFE® Brake or Active Blind Spot Assist
- lane markings are no longer detected

Activating/deactivating Active Lane Keeping Assist

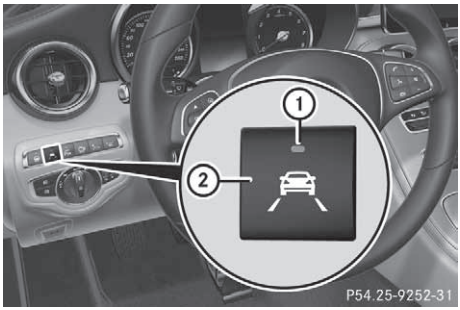

▶ **To activate:** press button ②.
Indicator lamp ① lights up. The message Lane Keeping Assist on appears on the multifunction display. If all conditions have been satisfied, a warning may be issued or a steering intervention made.

If you drive at speeds above 60 km/h and lane markings are detected, the lines on the assistant display (▷ page 252) appear in green. Active Lane Keeping Assist is ready for use.

▶ **To deactivate:** press button ②.
Indicator lamp ① goes out. Active Lane Keeping Assist is deactivated. The message Lane Keeping Assist off appears on the multifunction display.

Selecting Standard or Adaptive setting

▶ On the Assistance menu on the on-board computer, select the Active Lane Keeping Assist function (▷ page 255).
▶ Select setting Standard or Adaptive.
When Standard is selected, no warning vibration occurs if:

- you have switched on the turn signal – in this event, the warnings are suppressed for a certain period of time.
- a driving safety system such as ABS, BAS or ESP® intervenes.

When Adaptive is selected, no warning vibration occurs if:

- you have switched on the turn signal – in this event, the warnings are suppressed for a certain period of time.
- a driving safety system such as ABS, BAS or ESP® intervenes
- you accelerate hard, e.g. kickdown
- you brake hard
- you steer actively, e.g. swerve to avoid an obstacle or change lane quickly
- you cut the corner on a sharp bend

To ensure that you are warned only when necessary and in good time if you cross the lane marking, the system detects certain conditions and warns you accordingly.

The warning vibration occurs earlier in the following situations if:

- you approach the outer lane marking on a bend
- the road has very wide lanes, e.g. a motorway
- the system detects solid lane markings

The warning vibration occurs later in the following situations if:

- the road has narrow lanes
- you cut the corner on a bend

Towing a trailer

If you couple up a trailer, make sure that you have correctly established the electrical connection. This can be accomplished by checking the trailer lighting.

Towing a trailer

Important safety notes

⚠ WARNING

You could lose control of the vehicle/trailer combination if it begins to swerve. The vehicle/trailer combination could even overturn. There is a risk of an accident.

On no account should you attempt to straighten out the vehicle/trailer combination by increasing speed. Decrease your speed and do not countersteer. Brake if necessary.

⚠ WARNING

If the maximum permissible load for a carrier system is exceeded, the carrier could come loose from the vehicle and endanger other road users. There is a risk of an accident and injury.

Never exceed the maximum permissible load when using a carrier.

! If you have a trailer tow hitch retrofitted, changes to the engine cooling system may be necessary, depending on the vehicle type.

If you have a trailer tow hitch retrofitted, observe the anchorage points on the chassis.

Retrofitting a trailer tow hitch is only permissible if a trailer load is specified in your vehicle documents. If this is not the case, then the vehicle is not approved for towing a trailer.

For more information, please contact a qualified specialist workshop.

Exceeding the maximum permissible noseweight of the trailer drawbar on the ball coupling may cause damage.

Damage may be caused to the following:

- towing vehicle
- trailer
- ball coupling
- trailer tow hitch

The vehicle/trailer combination could become unstable.

The vehicle/trailer combination could also become unstable if the noseweight used is lower than the minimum permissible noseweight.

To avoid hazardous situations:

- make sure to check the noseweight before each journey
- the noseweight should be as close as possible to the maximum noseweight
- do not exceed the maximum permissible noseweight
- the noseweight must not be lower than the minimum permissible noseweight

Make sure that the following values are not exceeded:

- the permissible noseweight
- the permissible trailer load
- the permissible rear axle load of the towing vehicle
- the maximum permissible gross vehicle weight of both the towing vehicle and the trailer

The applicable permissible values, which must not be exceeded, can be found:

- in your vehicle documents
- on the type plates for the trailer
- on the vehicle identification plate

If the values differ, the lowest value applies.

You will find permissible trailer loads under "Technical data" (▷ page 403).

⚠ WARNING

If you release the ball coupling or it does not engage correctly when folding in, it will swing out. Within pivoting range of the ball coupling, there is an increased risk of an accident and injury.

Only release the ball coupling if the pivoting range is unobstructed. Always make sure that the ball coupling engages when folding in.

When reversing the towing vehicle, make sure there is nobody between the trailer and the vehicle.

Couple and uncouple the trailer carefully. If you do not couple the trailer to the towing vehicle correctly, the trailer could become detached.

When towing a trailer, your vehicle's handling characteristics will be different from when driving without a trailer.

The vehicle/trailer combination:

- is heavier
- is restricted in its acceleration and gradient-climbing capability
- has an increased braking distance
- is affected more by strong crosswinds
- demands more sensitive steering
- has a larger turning circle

This can impair the vehicle's handling characteristics. Adapt your driving style accordingly. Maintain a safe distance. Drive carefully.

When towing a trailer, always adjust your speed to the current road and weather conditions. Do not exceed the maximum permissible speed for your vehicle/trailer combination.

Notes on towing a trailer

General notes

When towing a trailer, set the tyre pressure on the rear axle of the towing vehicle for a maximum load. Further information on the tyre pressure table in the fuel filler flap (▷ page 378).

You will find permissible trailer loads under "Technical data" (▷ page 403).

Driving tips

Observe the information on ESP® trailer stabilisation (▷ page 78).

The maximum permissible speed for vehicle/trailer combinations depends on the type of trailer. Before beginning the journey, check the trailer's documents to see what the maximum permitted speed is. Observe the maximum permissible speed in the relevant country.

For certain Mercedes-Benz vehicles, the permissible rear axle load is increased when towing a trailer. See the "Technical data" section to find out whether this applies to your vehicle (▷ page 404). In the event of increased rear axle load, the car/trailer combination may not exceed a maximum speed of 100 km/h for reasons concerning the operating permit. This also applies in countries in which the maximum permissible speed for car/trailer combinations is greater than 100 km/h.

When towing a trailer, your vehicle's handling characteristics will be different to when driving without a trailer and the vehicle will consume more fuel.

Shift to a lower gear in good time on long and steep downhill gradients.

This also applies in the case of:

- activated Distance Pilot DISTRONIC
- activated cruise control

This will use the braking effect of the engine, so less braking will be required to maintain the vehicle speed. This relieves the load on the brake system and prevents the brakes from overheating and wearing too quickly. If you need additional braking, depress the brake pedal repeatedly rather than continuously.

Driving tips

- maintain a greater distance to the vehicle in front than when driving without a trailer
- avoid braking abruptly and, if possible, brake gently at first to allow the trailer to run on – then, increase the braking force rapidly
- the values given for gradient-climbing capabilities from a standstill refer to sea level, when driving in mountainous areas, note that the power output of the engine, and consequently the vehicle's gradient-climbing capability from a standstill, decrease with increasing altitude

If the trailer swings from side to side:

▶ Do not accelerate under any circumstances.
▶ Do not countersteer.
▶ Brake, if necessary.

Folding the ball coupling in/out

Folding out the ball coupling

⚠ WARNING

If the ball coupling is not correctly engaged, the trailer can detach. There is a risk of an accident.

Always engage the ball coupling as described.

⚠ WARNING

If you release the ball coupling or it does not engage correctly when folding in, it will swing out. Within pivoting range of the ball coupling, there is an increased risk of an accident and injury.

Only release the ball coupling if the pivoting range is unobstructed. Always make sure that the ball coupling engages when folding in.

Before you can tow a trailer with your vehicle, you must fold out the ball coupling.

▶ Make sure that the vehicle is stationary.

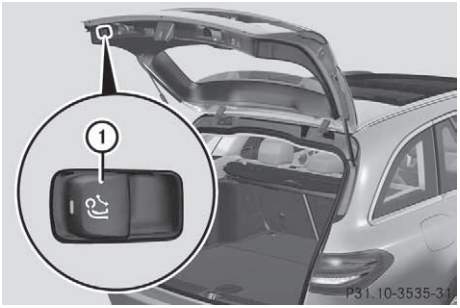

- ▶ Open the tailgate.
- ▶ Pull the ① switch until the ball coupling unlocks.
  The ball coupling folds out from under the rear bumper.
  The indicator lamp on switch ① flashes. The trailer power socket is integrated in the ball coupling.



- ▶ Press the ball coupling in the direction of the arrow until it engages in a vertical position.
  The indicator lamp in the ball coupling release switch goes out.
  The multifunction display shows the Check trailer hitch lock display message until the ball coupling is engaged.
- ▶ Remove the protective cap from the ball coupling and store it in a safe place.

Folding in the ball coupling

ⓘ Fold the ball coupling in if you are not using the trailer tow hitch.

- ▶ Make sure that the vehicle is stationary and the trailer cables are disconnected.
- ▶ Place the protective cap on the ball coupling.
- ▶ Pull the ① switch until the ball coupling unlocks.
  The ball coupling folds down from under the rear bumper. The indicator lamp on switch ① flashes.
- ▶ Press the ball coupling until it engages audibly behind the bumper.
  The indicator lamp on the ① switch goes out and the message on the multifunction display disappears.

Coupling up a trailer

- ▶ Apply the electric parking brake manually.
- ▶ **Vehicles with manual transmission:** fully depress the clutch pedal and engage first 1 or reverse gear R.
- ▶ **Vehicles with automatic transmission:** shift the transmission to position P.
- ▶ Position the trailer on a level surface behind the vehicle.
- ▶ Couple up the trailer.
- ▶ Establish the electrical connection between the vehicle and the trailer.
- ▶ Check that the trailer lighting system is working.
- ▶ Push the combination switch upwards and downwards and check whether the corresponding turn signal on the trailer is flashing.

A connected trailer is detected only when the electrical connection is established correctly and when the lighting system is working properly. The function of other systems also depends on this, for example:

- ESP®
- PARKTRONIC Parking Assist
- Parking Pilot
- Active Blind Spot Assist
- Active Lane Keeping Assist

Uncoupling a trailer

⚠ **WARNING**

If you uncouple a trailer with an engaged overrun brake, you could trap your hand between the vehicle and the trailer drawbar. This poses a risk of injury.

Do not uncouple a trailer with an engaged overrun brake.

⚠ WARNING

Vehicles with level control:

If you disconnect the trailer cable, the vehicle is lowered. This can cause you or others to become trapped between the vehicle body and tyres, or underneath the vehicle. This poses a risk of injury.

Make sure that no-one is in the immediate vicinity of the wheel arch or underneath the vehicle when disconnecting the trailer cable.

! Do not disconnect a trailer with an engaged overrun brake. Otherwise, your vehicle could be damaged by the rebounding of the overrun brake.

! Remove the installed adapter cable before folding in the ball coupling. Otherwise, damage may occur to the rear bumper and the adapter cable.

- ▶ Apply the electric parking brake manually.
- ▶ **Vehicles with manual transmission:** fully depress the clutch pedal and engage first 1 or reverse gear R.
- ▶ **Vehicles with automatic transmission:** shift the transmission to position P.
- ▶ Switch off the engine.
- ▶ Secure the vehicle and trailer against rolling away.
- ▶ Remove the trailer cable and uncouple the trailer.

Trailer power supply

! You can connect accessories to the permanent power supply up to a maximum of 240 W.

You cannot charge a trailer battery using the power supply.

When it leaves the factory, your vehicle's trailer socket is equipped with a permanent power supply and a power supply that is switched on via the ignition lock.

The permanent power supply is supplied via trailer socket pin 9.

The power supply that is switched on via the ignition lock is supplied via trailer socket pin 10.

The trailer's permanent power supply is switched off in the event of low on-board voltage and after six hours at the latest.

You can find more information about installing the trailer electrics at a qualified specialist workshop.

To activate the switched power supply:

- ▶ Turn the key to position 2 in the ignition lock (▷ page 153).

or

- ▶ Press the Start/Stop button twice on vehicles with KEYLESS-GO or the KEYLESS-GO start function (▷ page 154).

To deactivate the switched power supply:

- ▶ Turn the key to position 0 in the ignition lock (▷ page 153).

or

- ▶ Press the Start/Stop button once on vehicles with KEYLESS-GO or the KEYLESS-GO start function (▷ page 154).

Failure check for LEDs

If LED lamps are fitted in the trailer, a malfunction message may appear in the multifunction display even if there is no fault. The reason for the error message may be that the current has fallen below the minimum of 50 mA.

To ensure reliable operation of the failure indicator, each LED chain in the trailer lighting must be guaranteed a minimum current of 50 mA.

Trailer with 7-pin connector

General notes

Trailer with 7-pin connector: you can connect to the 13-pin socket on the ball coupling using an adapter or, if necessary, an adapter cable. Both can be obtained at a qualified specialist workshop.

Fitting the adapter

! Make sure that there is sufficient cable play so that the cable cannot become detached when cornering.

! Remove the installed adapter cable before folding in the ball coupling. Otherwise, dam-

age may occur to the rear bumper and the adapter cable.

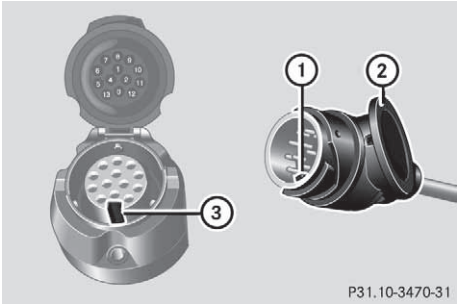

- ▶ Open the socket cover.
- ▶ Insert the connector with lug ① into groove ③ on the socket.
- ▶ Turn bayonet connection ② clockwise to the stop.
- ▶ Let the cover engage.
- ▶ If you are using an adapter cable, secure the cable to the trailer with cable ties.

Problems towing a trailer

Problem	Possible causes/consequences and ▶ Solutions
The unlocked ball coupling cannot be engaged.	▶ Consult a qualified specialist workshop.
The ball coupling does not unlock even though: • the vehicle is stationary • no trailer cable is connected • the ball coupling release switch has been pulled for longer than one second	The on-board voltage is too low. ▶ Start the engine. If the ball coupling still does not unlock: ▶ Consult a qualified specialist workshop.

Bicycle rack

General notes

When attached by clamping onto the ball coupling on the trailer tow hitch, the maximum payload is 75 kg. You can transport up to three bicycles.

The payload is calculated from the weight of the bicycle rack and the load of the bicycle rack.

Important safety notes

⚠ WARNING

The bicycle rack can detach from the vehicle if you

- exceed the permissible payload of the trailer tow hitch
- use the bicycle rack incorrectly
- attach the bicycle rack to the ball coupling beneath the ball head

There is a risk of an accident.

For your safety and that of other road users, observe the following:

- Always observe the permissible payload of the trailer tow hitch.
- Use the bicycle rack only to transport bicycles.
- Always attach the bicycle rack correctly by clamping onto the ball head and, if possible, to the guide pin on the ball coupling as well.
- To transport four bicycles, always use bicycle racks with additional support on the ball coupling's guide pin.
- Use only bicycle racks approved by Mercedes-Benz.
- Always comply with the bicycle rack's operating manual.

! Using unsuitable bicycle racks or using them incorrectly can cause damage to and fractures in the trailer tow hitch.

Use only bicycle racks approved by Mercedes-Benz.

Bicycle racks cause your vehicle's driving characteristics to change. The vehicle

- is heavier
- is restricted in its acceleration and gradient-climbing capability
- has an increased braking distance

This can impair the vehicle's handling characteristics. Adapt your driving style accordingly. Maintain a safe distance and drive carefully.

When using bicycle racks, set the tyre pressure on the rear axle of the vehicle for the maximum load. Further information on tyre pressure can be found on the tyre pressure table (▷ page 378).

Loading instructions

The greater the distance between the load's centre of gravity and the ball head, the higher the load exerted on the trailer tow hitch.

Therefore, observe the following notes:

- Attach heavy bicycles as close as possible to the vehicle.
- Always distribute the load on the bicycle rack as symmetrically as possible to the vehicle longitudinal axis.

Before loading the bicycle rack, Mercedes-Benz advises you to remove all add-on parts from the bicycles, e.g. bicycle baskets, child seats or batteries. This will allow you to improve the aerodynamic resistance and the bicycle rack's centre of gravity.

Always secure bicycles against slipping and check that they are firmly seated at regular intervals.

Do not use tarpaulins or other covers. This could impair the driving characteristics and rear visibility. The aerodynamic resistance would also rise, and so would the load exerted on the trailer tow hitch as a result.

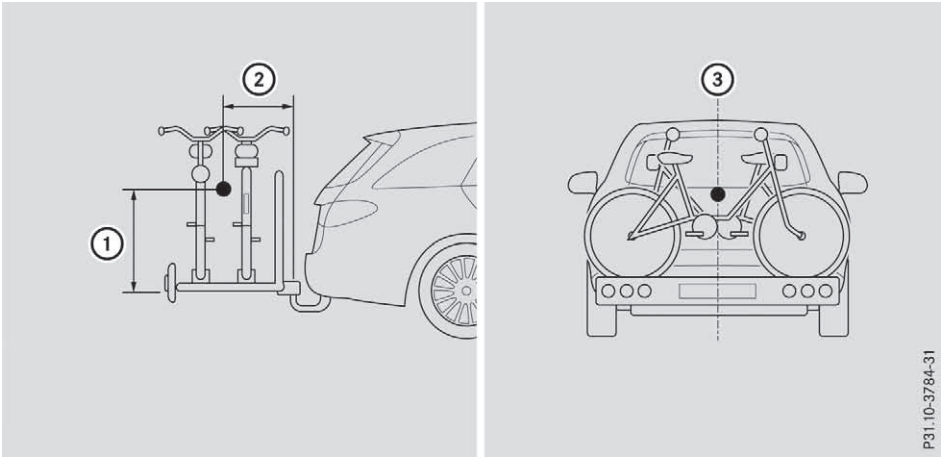

Load distribution on the bicycle rack

① Height between the centre of gravity and the ball coupling
② Distance to the rear between the centre of gravity and the ball coupling
③ Centre of gravity is located on the central axis of the vehicle

When loading the bicycle rack, comply with the following notes:

Number of bicycles	Total weight of bicycle rack and load	Max. distance ①	Max. distance ②
3	up to 75 kg	420 mm	300 mm

Important safety notes

⚠ WARNING

If you operate information and communication equipment integrated in the vehicle when driving, you could be distracted from the traffic situation. This could also cause you to lose control of the vehicle. There is a risk of an accident.

Only operate this equipment when the traffic situation permits. If you cannot be sure of this, stop the vehicle paying attention to road and traffic conditions and operate the equipment with the vehicle stationary.

You must observe the legal requirements for the country in which you are currently driving when operating the on-board computer.

⚠ WARNING

If the instrument cluster has failed or malfunctioned, you may not recognise function restrictions relevant to safety. The operating safety of your vehicle may be impaired. There is a risk of an accident.

Drive on carefully. Have the vehicle checked at a qualified specialist workshop immediately.

If the operating safety of your vehicle is impaired, park the vehicle safely as soon as possible. Contact a qualified specialist workshop.

The on-board computer shows only display messages or warnings from certain systems on the multifunction display. You should therefore make sure your vehicle is operating safely at all times.

For an overview, see the instrument cluster illustration (▷ page 38).

HYBRID vehicles: be sure to observe the separate operating instructions. Otherwise, you may fail to recognise dangers.

Displays and operation

Instrument cluster lighting

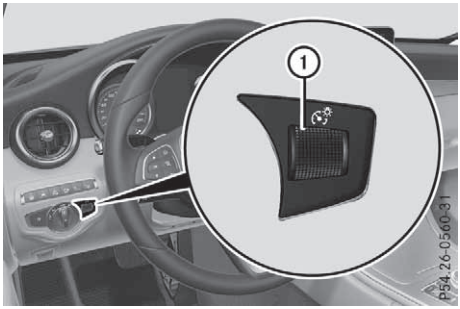

The lighting on the instrument cluster, on the displays and the controls in the vehicle interior can be adjusted using brightness control knob ①.

▶ Turn brightness control knob ① up or down. If you turn the light switch (▷ page 121) to the [≡D], [AUTO] or [≡D] position, the brightness will depend upon the brightness of the ambient light.

ⓘ The light sensor on the instrument cluster automatically controls the brightness of the multifunction display.

In daylight, the displays on the instrument cluster are lit. A dimming function is not possible in daylight.

Speedometer with segments

The speedometer is divided into segments depending on the vehicle's equipment.

The segments in the speedometer indicate which speed range is available.

- Cruise control enabled (▷ page 188):
  The segments light up from the stored speed to the end of the scale or to a permanently set speed limitation.
- Speed limiter activated (▷ page 190):
  The segments light up from the start of the scale to the selected speed limitation.
- Distance Pilot DISTRONIC is activated (▷ page 193):

One or two segments in the stored speed range light up.

- Distance Pilot DISTRONIC detects a vehicle in front moving more slowly than the stored speed:

  The segments between the speed of the vehicle in front and the stored speed light up.

Rev counter

! Do not drive in the overrevving range. Doing so will damage the engine.

The red band in the rev counter indicates the engine's overrevving range.

The fuel supply is interrupted to protect the engine when the red band is reached.

Outside temperature display

You should pay special attention to road conditions when temperatures are around freezing point.

Bear in mind that the outside temperature display indicates the measured air temperature and not the road surface temperature.

The outside temperature display is in the multifunction display (▷ page 243).

Changes in the outside temperature are displayed after a short delay.

Coolant temperature display

⚠ **WARNING**

If you open the bonnet while the engine is overheating or while there is a fire in the engine compartment, you could come into contact with hot gases or other leaking service products. There is a danger of injury.

Allow an overheating engine to cool down before opening the bonnet. If there is a fire in the engine compartment, leave the bonnet closed and notify the fire brigade.

The coolant temperature display is shown in the lower section of the rev counter (▷ page 38).

At high outside temperatures and when driving in mountainous terrain, the coolant temperature may rise to the end of the scale.

Under normal operating conditions and with the correct coolant level, the display may rise to 120 °C.

Operating the on-board computer

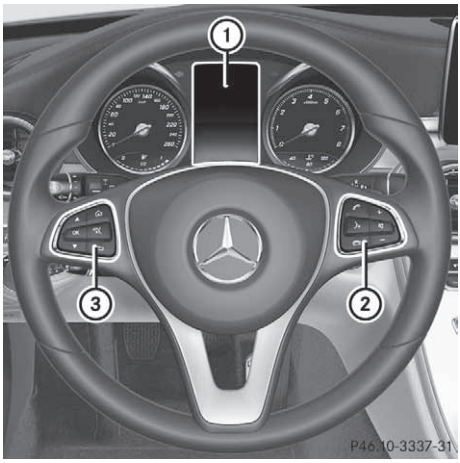

① Multifunction display
② Right control panel
③ Left control panel

▶ **To activate the on-board computer:** switch on the power supply.

Vehicles with manual transmission: if you remove the key, then quickly re-insert it and turn it to position **1**, the instrument cluster and, in turn, the on-board computer are not activated.

You can control the multifunction display and the settings on the on-board computer using the buttons on the multifunction steering wheel.

Left control panel

⌂	• Opens the menu list
▲ ▼	**Press briefly:** • Scrolls through lists • Selects a menu or function • On the Radio or Media menu: opens the track or station list and selects a station, audio track or video • On the Telephone menu: switches to the telephone book and selects a name or a telephone number

▲ ▼	**Press and hold:** • Scrolls quickly through all lists • On the Radio or Media menu: selects a station, audio track or video using rapid scrolling • On the Telephone menu: starts rapid scrolling if the telephone book is open
OK	• On all menus: confirms the selected entry in the list • On the Radio or Media menu: opens the list of available radio sources or media • On the Telephone menu: switches to the telephone book and starts dialling the selected number
	• Vehicles with Audio 20 multimedia system: switches off voice control for navigation (see the manufacturer's operating instructions) • Vehicles with COMAND Online multimedia system: Switches off LINGUATRONIC (see the separate operating instructions)
	Press briefly: • Back • On the Radio or Media menu: exits the track or station list or list of available radio sources or media • Hides display messages • Exits the telephone book/redial memory
	Press and hold: • Calls up the standard display on the Trip menu

Right control panel

	• Rejects or ends a call • Exits the telephone book/redial memory
	• Makes or accepts a call • Switches to the redial memory
+ −	• Adjusts the volume
	• Mute
	• Vehicles with Audio 20 multimedia system: Switches on voice control for navigation (see the manufacturer's operating instructions) • Vehicles with COMAND Online multimedia system: Switches on LINGUATRONIC (see the separate operating instructions)

Multifunction display



① Drive program (▷ page 167)
② Transmission position (▷ page 168)
③ Additional speedometer
④ Display
⑤ Time
⑥ Outside temperature (▷ page 242)

Display panel ④ shows the selected menu or submenu and display messages.

▶ **To open the menu list:** press ⌂ on the steering wheel.
The menu list appears on display panel ④.

Possible readings on the multifunction display:

• ⬆ Gearshift recommendation for manual transmission (▷ page 165) or for automatic

transmission (manual gearshifting) (▷ page 173)
- P Parking Pilot (▷ page 205)
- LIM Limiter (▷ page 243)
- Cruise control (▷ page 188)
- Distance Pilot DISTRONIC Steering Pilot (▷ page 198)
- Adaptive Highbeam Assist (▷ page 124)
- Adaptive Highbeam Assist Plus (▷ page 125)
- ECO start/stop function (▷ page 157)
- HOLD HOLD function (▷ page 200)
- 120 km/h Maximum permissible speed exceeded (for certain countries only)

Head-up display

General notes

The head-up display projects information from the navigation system and the driver assistance system above the dashboard into the driver's field of vision. This allows the head-up display to collect information without your having to take your eyes off the road.

For the content to be displayed, the following functions must be available in the vehicle and switched on:

- cruise control
- speed limiter
- Distance Pilot DISTRONIC
- Traffic Sign Assist
- navigation

Important safety notes

The Head-up Display is only an aid and is not a substitute for attentive driving.

Speed limits and overtaking restrictions are not always correctly displayed. Traffic signs always have priority over the Traffic Sign Assist display.

The visibility of the Head-up Display is influenced by the following conditions:

- the driver's seat position
- the positioning of the display image
- the general light conditions
- sunglasses with polarisation filters
- wet road surfaces
- blocking of the beam by objects on the display cover

In extreme sunlight, sections of the display may be faded. This can be corrected by switching the Head-up Display off and on again.

Vehicles with the Head-up Display are equipped with a special windscreen. Should repairs be necessary, have the windscreen replaced at a qualified specialist workshop.

Displays and operation

Switching the head-up display on/off

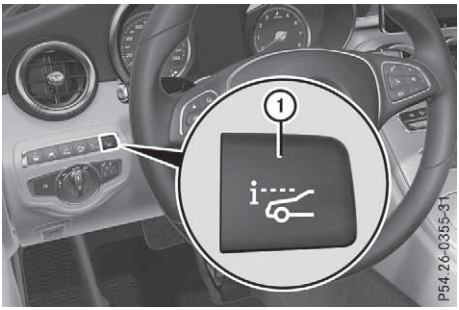

▶ Press the ① button.
When the head-up display is switched on, the display appears in the driver's field of vision.

Standard displays on the head-up display

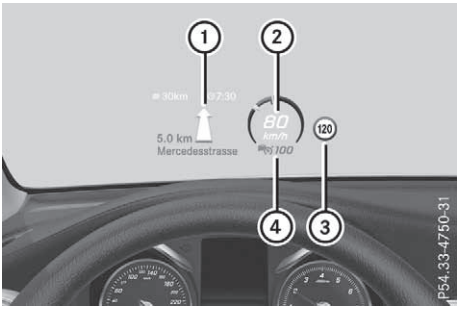

① Navigation instructions
② Current speed
③ Detected instructions and traffic signs
④ Cruise control, speed limiter or Distance Pilot DISTRONIC set speed

AMG displays on the head-up display

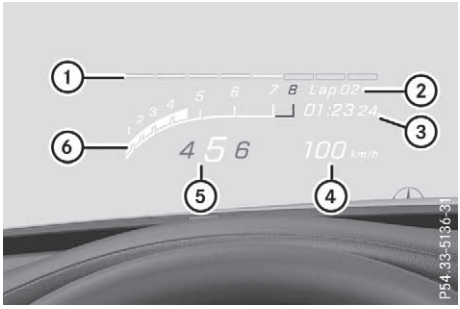

① Protection against reaching the overrevving range
② RACE TIMER lap
③ RACE TIMER lap time
④ Current speed
⑤ Currently selected gear, gearshift options with manual gearshifting
⑥ Current engine speed

Setting options

You can make the following settings on the head-up display submenu:

- adjust the position of the head-up display on the windscreen (▷ page 256)
- adjust the brightness of the displays on the head-up display (▷ page 256)
- select which information you want to appear on the head-up display (▷ page 255)

  Using the Display content function, you can, depending on your vehicle's equipment, choose between four standard displays. The selected content then appears on the head-up display.

  In Mercedes-AMG vehicles, you can choose between further AMG displays in addition to the standard displays, depending on your vehicle's equipment.

  If you select a display with traffic signs, traffic signs detected by Traffic Sign Assist appear on the head-up display.

Menus and submenus

Menu overview

Press [⌂] on the steering wheel to open the menu list.

Operating the on-board computer (▷ page 242).

Depending on the vehicle equipment, you can select the following menus:

- Trip menu (▷ page 245)
- Navi menu (navigation instructions) (▷ page 247)
- Radio menu (▷ page 249)
- Media menu (▷ page 249)
- Telephone menu (▷ page 251)
- Assistance graphic menu (▷ page 252)
- Service menu (▷ page 253)
- Settings menu (▷ page 253)
- AMG menu in Mercedes-AMG vehicles (▷ page 258)

Trip menu

Standard display

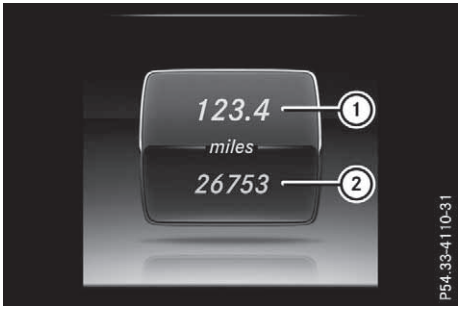

▶ Press and hold the [↩] button on the steering wheel until the Trip menu with trip meter ① and total distance recorder ② appears.

Displaying the range and current fuel consumption



① Range of fuel in tank
② Current fuel consumption
③ Recuperation display

- ▶ Press [⌂] on the steering wheel to open the menu list.
- ▶ Press [▼] or [▲] on the steering wheel to select the Trip menu.
- ▶ Confirm by pressing [OK] on the steering wheel.
- ▶ Using [▲] or [▼], select the display. Approximate range ① that can be covered is calculated according to your current driving style and the amount of fuel in the tank. If only a small amount of fuel is left in the fuel tank, a vehicle being refuelled appears instead of approximate range ①.

  Recuperation display ③ shows you whether energy has been recuperated from the kinetic energy in overrun mode and saved in the battery. Recuperation display ③ depends on the engine installed and is therefore not available in all vehicles.

ECO display

- ▶ Press [⌂] on the steering wheel to open the menu list.
- ▶ Press [▼] or [▲] on the steering wheel to select the Trip menu.
- ▶ Confirm by pressing [OK] on the steering wheel.
- ▶ Press [▼] or [▲] to select ECO display.

If the ignition remains switched off for longer than four hours, the ECO display will be automatically reset.

Further information on the ECO display (▷ page 184).

Trip computer "From start" or "From reset"



① Distance
② Driving time
③ Average speed
④ Average fuel consumption

- ▶ Press [⌂] on the steering wheel to open the menu list.
- ▶ Press [▼] or [▲] on the steering wheel to select the Trip menu.
- ▶ Confirm by pressing [OK] on the steering wheel.
- ▶ Press [▼] or [▲] to select From start or From reset.

  The values on the From start submenu are calculated from the start of a journey, while the values on the From reset submenu are calculated from the last time this submenu was reset (▷ page 247).

  The trip computer is automatically reset in the following cases From start:
  - the ignition has been switched off for more than four hours
  - 999 hours have been exceeded
  - 9,999 kilometres have been exceeded

  When 9999 hours or 99,999 kilometres have been exceeded, the trip computer is automatically resetFrom reset.

Digital speedometer

- ▶ Press [⌂] on the steering wheel to open the menu list.
- ▶ Press [▼] or [▲] on the steering wheel to select the Trip menu.

- ▶ Confirm by pressing OK on the steering wheel.
- ▶ Press ▼ or ▲ to select the digital speedometer.

Resetting values

- ▶ Press ⌂ on the steering wheel to open the menu list.
- ▶ Press ▼ or ▲ on the steering wheel to select the Trip menu.
- ▶ Confirm by pressing OK on the steering wheel.
- ▶ Press ▼ or ▲ to select the function that you wish to reset.
- ▶ Press OK briefly.
- ▶ Press ▼ to select Yes and press OK to confirm.

You can reset the values of the following functions:

- trip meter
- "From start" trip computer
- "From reset" trip computer
- ECO display

If you reset the values on the "ECO display", the values in the "From start" trip computer are also reset. If you reset the values on the "From start" trip computer, the values on the "ECO display" are also reset.

Navigation menu

Displaying navigation instructions

On the Navi menu, the multifunction display shows navigation instructions. You can find further information on navigation instructions in the Digital Owner's Manual in the multimedia system.

- ▶ Switch on the multimedia system.
- ▶ Press ⌂ on the steering wheel to open the menu list.
- ▶ Press ▼ or ▲ on the steering wheel to select the Navi menu.
- ▶ Confirm by pressing OK on the steering wheel.

Route guidance not active

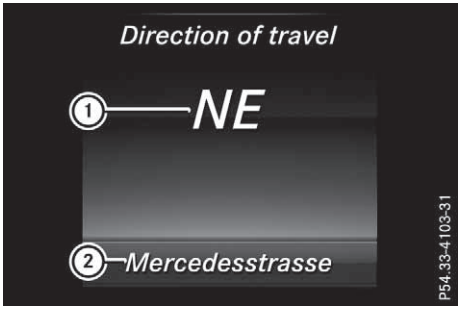

① Direction of travel
② Current road

Route guidance active

No change of direction announced



① Distance to the next destination
② Estimated time of arrival
③ Distance to the next change of direction
④ Current road

Change of direction announced with a lane recommendation

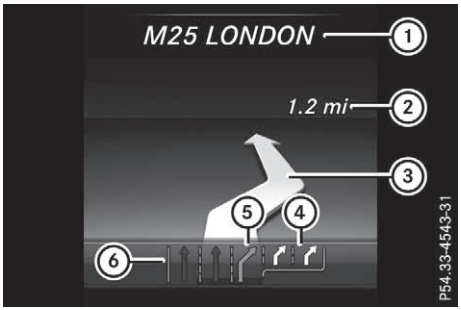

① Target of the change of direction
② Distance to the change of direction
③ Change-of-direction symbol
④ Recommended lane and new lane during a change of direction (white)
⑤ Possible lane
⑥ Lane not recommended (dark grey)

On multi-lane roads, new lane recommendations can be displayed for the next change of direction if the digital map supports this data. During the change of direction, new lanes may be added.

Lane not recommended ⑥: you will not be able to complete the next change of direction if you stay in this lane.

Possible lane ⑤: you will be able to complete the next change of direction only in this lane.

Recommended lane ④: in this lane, you will be able to complete the next change of direction and the one after that.

Change of direction without lane recommendation

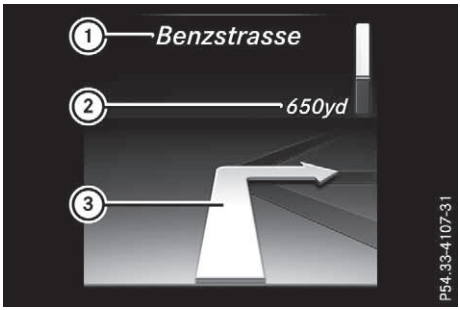

① Road to which the change of direction leads
② Distance to change of direction and visual distance display
③ Change-of-direction symbol

When a change of direction is to be made, you will see symbol ③ for the change of direction and distance graphic ②. This shortens towards the top of the display as you approach the point of the announced change of direction. The change of direction starts once the distance display reaches zero.

Change of direction with lane recommendation

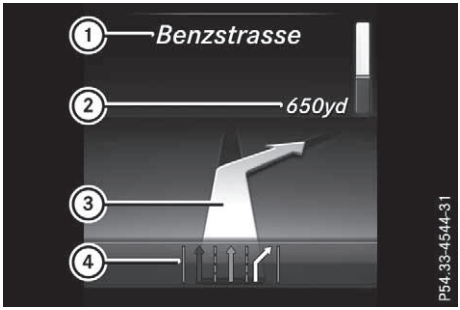

① Road to which the change of direction leads
② Distance to change of direction and visual distance display
③ Change-of-direction symbol
④ Lane recommendation

Other status indicators of the navigation system



① Additional information

Other possible additional information:

- New route... or Calculating route...
  A new route is calculated.
- Road not mapped
  The vehicle position is inside the area of the digital map but the road is not recognised, e.g. new roads, car parks or private land.
- No route
  No route could be calculated to the selected destination.
- Off map
  The map for the current vehicle position is not available.
- 🏁
  You have reached the destination or an intermediate destination.

Radio menu



① Waveband
② Station with preset position
③ Artist name
④ Track name

The multifunction display shows station ② with station frequency or station name. The preset position is displayed along with station ② only if this has been stored. You can store radio stations in the multimedia system.

- ▶ Switch on the multimedia system.
- ▶ Press [⌂] on the steering wheel to open the menu list.
- ▶ Press [▼] or [▲] on the steering wheel to select the Radio menu.
- ▶ Confirm by pressing [OK] on the steering wheel.
  Currently set station ② appears on the multifunction display.
- ▶ **To open the channel list:** press the [▼] or [▲] button briefly.
- ▶ **To select a station in the station list:** press the [▼] or [▲] button briefly.
- ▶ **To select a station in the station list using rapid scrolling:** press and hold the [▼] or [▲] button.
- ▶ **To select the waveband or station memory:** press [OK] briefly.
- ▶ Press [▼] or [▲] to select the waveband or station memory.
- ▶ Press [OK] to confirm the selection.

ⓘ DAB radio mode (**D**igital **A**udio **B**roadcasting) is an optimised digital transmission standard designed for the mobile reception of radio transmissions.

Media menu

Changing the media source

You can change the media source and playback mode (audio, video or TV) at any time in the Media menu.

- ▶ Switch on the multimedia system.
- ▶ Press [⌂] on the steering wheel to open the menu list.
- ▶ Press [▼] or [▲] on the steering wheel to select the Media menu.

- ▶ Confirm by pressing OK on the steering wheel.
- ▶ **To open the media sources list:** press OK briefly.
  The list shows the following media sources, for example:
  - CD or DVD (DVD only in COMAND Online multimedia system)
  - SD card
  - media register (only in COMAND Online multimedia system)
  - USB storage device
  - Bluetooth®-capable audio equipment

Please observe further information on media support and media operation in the multimedia system (see Digital Owner's Manual).

Operating the audio player or audio media



① Media source, e.g. name of USB memory stick
② Current track
③ Artist name
④ Album name
⑤ Folder name

Audio files from various audio players or media can be played, depending on the equipment fitted in the vehicle.

- ▶ Switch on the multimedia system.
- ▶ Press ⌂ on the steering wheel to open the menu list.
- ▶ Press ▼ or ▲ on the steering wheel to select the Media menu.
- ▶ Confirm by pressing OK on the steering wheel.
- ▶ **To select an audio player or audio media:** press OK briefly. The list containing the media sources appears.
- ▶ Press ▼ or ▲ to select the corresponding audio player or media.
- ▶ Press OK to confirm.
- ▶ **To open the track list:** press the ▼ or ▲ button briefly.
- ▶ **To select the next or previous track in the track list:** press the ▼ or ▲ button briefly.
- ▶ **To select a track from the track list using rapid scrolling:** press and hold ▼ or ▲ until the desired track is shown.
  If you press and hold the button, the speed of rapid scroll increases. Not all audio players or media support this function.

If the corresponding track information is stored on the audio drive or audio media, the following is shown on the multifunction display:

- track number
- track name
- artist name
- album

The track information does not appear in audio AUX mode (**Aux**iliary audio mode: external audio source connected).

Operating the DVD-Video

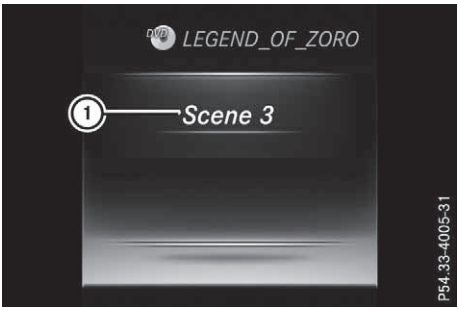

- ▶ Switch on the multimedia system.
- ▶ Press ⌂ on the steering wheel to open the menu list.
- ▶ Press ▼ or ▲ on the steering wheel to select the Media menu.
- ▶ Confirm by pressing OK on the steering wheel.

- ▶ **To select a DVD drive or DVD media:** press OK briefly. The list containing the media sources appears.
- ▶ Press ▼ or ▲ to select the corresponding DVD single drive or disc.
- ▶ Press OK to confirm.
- ▶ **To open the scene list:** press the ▼ or ▲ button briefly.
- ▶ **To select the next or previous scene in the scene list:** press the ▼ or ▲ button briefly.
- ▶ **To select a scene from the scene list using rapid scrolling:** press and hold ▼ or ▲ until desired scene ① is shown.
- ▶ Press OK to confirm the selection.

Operating the TV

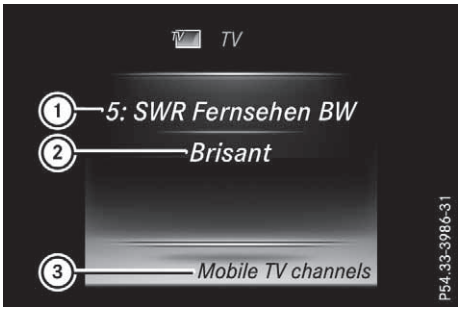

① TV channel with preset
② Programme information, e.g. the name of the film
③ Name of channel list

The preset position is displayed only along with TV channel ① if this has been stored. You can store TV channels in the multimedia system.

- ▶ Switch on the multimedia system.
- ▶ Press ⌂ on the steering wheel to open the menu list.
- ▶ Press ▼ or ▲ on the steering wheel to select the Media menu.
- ▶ Confirm by pressing OK on the steering wheel.
- ▶ **To select TV:** press OK briefly. The list containing the media sources appears.
- ▶ Press ▼ or ▲ to select TV.
- ▶ Press OK to confirm.
- ▶ **To open the channel list:** press the ▼ or ▲ button briefly.
- ▶ **To select a channel in the channel list:** press the ▼ or ▲ button briefly.
- ▶ **To select a channel in the channel list using rapid scrolling:** press and hold the ▼ or ▲ button.
- ▶ Press OK to confirm the selection.

Telephone menu

Introduction

⚠ WARNING

If you operate information and communication equipment integrated in the vehicle when driving, you could be distracted from the traffic situation. This could also cause you to lose control of the vehicle. There is a risk of an accident.

Only operate this equipment when the traffic situation permits. If you cannot be sure of this, stop the vehicle paying attention to road and traffic conditions and operate the equipment with the vehicle stationary.

When using the phone, you must observe the legal requirements for the country in which you are currently driving.

- ▶ Switch on the mobile phone (see the manufacturer's operating instructions).
- ▶ Switch on the multimedia system.
- ▶ Insert the mobile phone into the bracket.

or

- ▶ Establish a Bluetooth® connection to the multimedia system (see Digital Owner's Manual).
- ▶ Press ⌂ on the steering wheel to open the menu list.
- ▶ Press ▼ or ▲ on the steering wheel to select the Telephone menu.
- ▶ Confirm by pressing OK on the steering wheel.

You will see one of the following display messages on the multifunction display:

- Telephone ready or the name of the network provider: the mobile phone has found a network and is ready to receive.
- Telephone No service: there is no network available or the mobile phone is searching for a network.

You can obtain further information about suitable mobile phones and connecting mobile phones via Bluetooth®:

- on the Internet at http://www.mercedes-benz.com/connect
- at any Mercedes-Benz Service Centre

Accepting a call

If someone calls you when you are in the Telephone menu, a display message appears on the multifunction display.

You can accept a call at any time irrespective of the selected menu.

- Press the button on the steering wheel to accept an incoming call.

Rejecting or ending a call

- Press the button on the steering wheel to reject or end the call.

Selecting an entry in the phone book

- Press on the steering wheel to open the menu list.
- Press ▼ or ▲ on the steering wheel to select the Telephone menu.
- Confirm by pressing OK on the steering wheel.
- Press ▼, ▲ or OK to switch to the phone book.
- Press ▼ or ▲ to select the names one after the other.

or

- **To start rapid scrolling:** press and hold ▼ or ▲ for longer than one second.
  The names are displayed quickly one after the other in the phone book.
  If you press and hold the ▼ or ▲ button for longer than five seconds, the name appears with the next or previous letter initial letter in the alphabet.
  Rapid scrolling stops when you release the button or reach the end of the list.
- **If only one telephone number is stored for a name:** press the or OK button to start dialling.

or

- **If more than one number is stored for a name:** press the or OK button to display the numbers.
- Press ▼ or ▲ to select the number you want to dial.
- Press the or OK button to start dialling.

or

- **To exit the phone book:** press the or button briefly.

Redialling

The on-board computer saves the last names or numbers dialled in the redial memory.

- Press on the steering wheel to open the menu list.
- Press ▼ or ▲ on the steering wheel to select the Telephone menu.
- Confirm by pressing OK on the steering wheel.
- Press the button to switch to the redial memory.
- Press ▼ or ▲ to select the desired name or number.
- Press the or OK button to start dialling.

or

- **To exit the redial memory:** press the or button briefly.

Assistant display menu

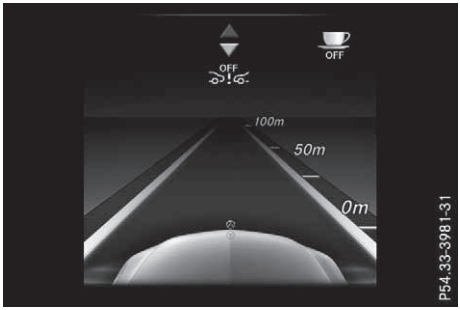

- Press on the steering wheel to open the menu list.
- Press ▼ or ▲ on the steering wheel to select the Assistance graphic menu.

▶ Confirm by pressing OK on the steering wheel.
The assistant display shows you the status of and/or information from the following driving systems or driving safety systems:
- Distance Pilot DISTRONIC distance display (▷ page 197)
- Traffic Sign Assist (▷ page 224)
- Distance warning function and autonomous brake function of Active Brake Assist (▷ page 73)
- Active Brake Assist with cross-traffic function (▷ page 79)
- Blind Spot Assist (▷ page 225) or Active Blind Spot Assist (▷ page 228)
- ATTENTION ASSIST (▷ page 222)
- Lane Keeping Assist (▷ page 227) or Active Lane Keeping Assist (▷ page 231)
- Rear window wiper (▷ page 132)

▶ Press ▼ to display the ATTENTION ASSIST assessment.

Service menu

Introduction

Depending on the equipment fitted in the vehicle, you have the following options on the Service menu:
- call up display messages in the message memory (▷ page 262)
- restart the tyre pressure loss warning system (▷ page 380) or checking the tyre pressure electronically (▷ page 382)
- call up the service due date (▷ page 346)
- display the AdBlue® level and range (▷ page 253)

Displaying the AdBlue® level and range

▶ Press ⌂ on the steering wheel to open the menu list.
▶ Press ▼ or ▲ on the steering wheel to select the Service menu.
▶ Confirm by pressing OK on the steering wheel.
▶ Press ▼ or ▲ to select the AdBlue submenu.
▶ Press OK to confirm the selection.
The range and AdBlue® level appear in a bar graph on the multifunction display.

Observe the information and notes on "Refuelling" (▷ page 177).

Settings menu

Introduction

Depending on the equipment fitted in the vehicle, you have the following options in the Settings menu:
- Change assistance settings (▷ page 253)
- Change head-up display settings (▷ page 255)
- Change light settings (▷ page 256)
- Change instrument cluster settings (▷ page 257)
- Change vehicle settings (▷ page 258)
- Restore factory settings (▷ page 258)

Assistance submenu

Activating/deactivating ESP®

Observe the "Important safety notes" section in the description of ESP® (▷ page 76).

⚠ WARNING

If you deactivate ESP®, ESP® no longer stabilises the vehicle. There is an increased risk of skidding and an accident.

Only deactivate ESP® in the situations described in the following.

It may be best to deactivate ESP® in the following situations:
- when snow chains are used
- in deep snow
- on sand or gravel

Deactivate/activate ESP® in Mercedes-AMG vehicles (▷ page 77).

Further information about ESP® (▷ page 75).

▶ Start the engine.
▶ Press ⌂ on the steering wheel to open the menu list.

- Press ▼ or ▲ on the steering wheel to select the Settings menu.
- Confirm by pressing OK on the steering wheel.
- Press ▼ or ▲ to select the Assistance submenu.
- Press OK to confirm.
- Select ESP by pressing ▼ or ▲.
- Press OK to confirm.
  The current selection appears.
- **To activate/deactivate:** press OK again.
  If the OFF warning lamp on the instrument cluster lights up when the vehicle is ready to drive, ESP® is deactivated.

If the and OFF warning lamps light up continuously, ESP® is not available due to a malfunction.

Observe the information on warning lamps (▷ page 298).

Observe the information on display messages (▷ page 263).

Traffic Sign Assist

You can activate or deactivate the warning function of Traffic Sign Assist on the Traffic Sign Assist menu. When the message function is activated, detected traffic signs and information appear on the multifunction display for five seconds.

- Press ⌂ on the steering wheel to open the menu list.
- Press ▼ or ▲ on the steering wheel to select the Settings menu.
- Confirm by pressing OK on the steering wheel.
- Press ▼ or ▲ to select the Assistance submenu.
- Press OK to confirm.
- Select Traffic Sign Assist by pressing ▼ or ▲.
- Press OK to confirm.
  The current selection appears.
- **Activate or deactivate the warning function:** press OK again.

For further information about Traffic Sign Assist, see (▷ page 223).

Activating/deactivating Active Brake Assist

- Press ⌂ on the steering wheel to open the menu list.
- Press ▼ or ▲ on the steering wheel to select the Settings menu.
- Confirm by pressing OK on the steering wheel.
- Press ▼ or ▲ to select the Assistance submenu.
- Press OK to confirm.
- Select Brake Assist by pressing ▲ or ▼.
- Press OK to confirm.
  The current selection appears.
- **To activate/deactivate:** press OK again.
  When Active Brake Assist is deactivated, the OFF symbol appears on the Assistance graphic menu of the multifunction display.

Further information on Active Brake Assist (▷ page 73).

Activating/deactivating Active Brake Assist with cross-traffic function

Brake Assist with cross-traffic function is available only in vehicles with the Driving Assistance package.

- Press ⌂ on the steering wheel to open the menu list.
- Press ▼ or ▲ on the steering wheel to select the Settings menu.
- Confirm by pressing OK on the steering wheel.
- Press ▼ or ▲ to select the Assistance submenu.
- Press OK to confirm.
- Select Brake Assist by pressing ▼ or ▲.
- Press OK to confirm.
  The current selection appears.
- **To activate/deactivate:** press OK again.
  When Active Brake Assist with cross-traffic function is deactivated, the OFF symbol appears on the Assistance graphic menu of the multifunction display.

Further information on Active Brake Assist with cross-traffic function (▷ page 79).

Activating/deactivating Blind Spot Assist

- ▶ Press ⌂ on the steering wheel to open the menu list.
- ▶ Press ▼ or ▲ on the steering wheel to select the Settings menu.
- ▶ Confirm by pressing OK on the steering wheel.
- ▶ Press ▼ or ▲ to select the Assistance submenu.
- ▶ Press OK to confirm.
- ▶ Select Blind Spot Assist by pressing ▼ or ▲.
- ▶ Press OK to confirm.
  The current selection appears.
- ▶ **To activate/deactivate:** press OK again.

Further information about Blind Spot Assist (▷ page 225).

Further information about Active Blind Spot Assist (▷ page 228).

Setting ATTENTION ASSIST

- ▶ Press ⌂ on the steering wheel to open the menu list.
- ▶ Press ▼ or ▲ on the steering wheel to select the Settings menu.
- ▶ Confirm by pressing OK on the steering wheel.
- ▶ Press ▼ or ▲ to select the Assistance submenu.
- ▶ Press OK to confirm.
- ▶ Select Attention Assist by pressing ▼ or ▲.
- ▶ Press OK to confirm.
- ▶ Press ▼ or ▲ to select Deactivated Standard or Sensitive.
- ▶ Press button OK to confirm the selection.
  When ATTENTION ASSIST is deactivated, the OFF symbol appears in the Assistance graphic menu on the multifunction display.

Further information about ATTENTION ASSIST (▷ page 222).

Setting Lane Keeping Assist

- ▶ Press ⌂ on the steering wheel to open the menu list.
- ▶ Press ▼ or ▲ on the steering wheel to select the Settings menu.
- ▶ Confirm by pressing OK on the steering wheel.
- ▶ Press ▼ or ▲ to select the Assistance submenu.
- ▶ Press OK to confirm.
- ▶ Select Lane Keeping Assist by pressing ▼ or ▲.
- ▶ Press OK to confirm.
  The current selection Standard or Adaptive appears.
- ▶ **To change the setting:** press OK again.

Further information about Lane Keeping Assist (▷ page 227).

Further information about Active Lane Keeping Assist (▷ page 231).

Head-up display submenu

Selecting other displays

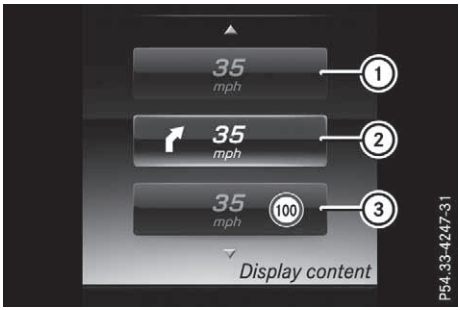

① Vehicle speed display
② Vehicle speed and navigation instruction display
③ Vehicle speed display and Traffic Sign Assist

You have up to four different display options with the Display content function, depending on the vehicle's equipment. The selected content appears on the head-up display.

In Mercedes-AMG vehicles, you can also choose between two AMG displays. If you select an AMG display, the head-up display shows AMG-specific content.

If you select a display with traffic signs, traffic signs detected by Traffic Sign Assist appear on the head-up display.

- ▶ Press ⌂ on the steering wheel to open the menu list.
- ▶ Press ▼ or ▲ on the steering wheel to select the Settings menu.
- ▶ Confirm by pressing OK on the steering wheel.

- ▶ Press ▼ or ▲ to select the Head-up display submenu.
- ▶ Press OK to confirm.
- ▶ Select Display content by pressing ▼ or ▲.
- ▶ Press OK to confirm.
  A graphical selection list appears.
- ▶ Press ▼ or ▲ to select the desired display.
- ▶ Press OK to confirm the selection.

You can find more information on the navigation displays in the multimedia system (see Digital Owner's Manual).

Information on Traffic Sign Assist displays (▷ page 223).

Setting the position

You can adjust the position of the head-up display on the windscreen. You can compensate for height differences if the seat positions are changed, for example.

- ▶ Switch on the head-up display (▷ page 244).
- ▶ Press ⌂ on the steering wheel to open the menu list.
- ▶ Press ▼ or ▲ on the steering wheel to select the Settings menu.
- ▶ Confirm by pressing OK on the steering wheel.
- ▶ Press ▼ or ▲ to select the Head-up display submenu.
- ▶ Press OK to confirm.
- ▶ Press ▼ or ▲ to select the Position function.
- ▶ Press OK to save the setting.
- ▶ Press ▼ or ▲ to adjust the position to a level from Level +5 (up) to Level -5 (down).
- ▶ Press OK or ⮌ to save the setting.

Using the Memory function, you can save and call up the set position of the head-up display as a single memory preset (▷ page 119).

Adjusting the brightness

The brightness of the head-up display is automatically adjusted to the surrounding light conditions. You can also individually adjust the brightness of the Head-up Display.

- ▶ Switch on the head-up display (▷ page 244).
- ▶ Press ⌂ on the steering wheel to open the menu list.
- ▶ Press ▼ or ▲ on the steering wheel to select the Settings menu.
- ▶ Confirm by pressing OK on the steering wheel.
- ▶ Press ▼ or ▲ to select the Head-up display submenu.
- ▶ Press OK to confirm.
- ▶ Press ▼ or ▲ to select the Brightness function.
- ▶ Press OK to save the setting.
- ▶ Press ▼ or ▲ to adjust the brightness to a level from Level +5 (bright) to Level -5 (dark).
- ▶ Press OK or ⮌ to save the setting.

Light submenu

Switching the Intelligent Light System on/off

- ▶ Press ⌂ on the steering wheel to open the menu list.
- ▶ Press ▼ or ▲ on the steering wheel to select the Settings menu.
- ▶ Confirm by pressing OK on the steering wheel.
- ▶ Press ▼ or ▲ to select the Lights submenu.
- ▶ Press OK to confirm.
- ▶ Press ▼ or ▲ to select the Intelligent Light System function.
  If the Intelligent Light System function has been switched on, the cone of light is shown in white and the ≡D symbol in yellow on the multifunction display.
- ▶ Press OK to save the setting.

If you switch on the Intelligent Light System function, the following functions are activated:

- motorway mode
- active light function
- cornering light function
- extended range foglamps

If you set the dipped-beam headlamps for driving on the right/left, the multifunction display shows the Inactive for left-side traffic or Inactive for right-side traffic display message in the Lights submenu instead of the Intelligent Light System function (▷ page 257). This display message will appear

only if the setting for driving on the left/right is set opposite to your vehicle's country version.

Further information on the Intelligent Light System (▷ page 124).

Setting the dipped-beam headlamps for driving on the left/right

This function is available only in vehicles with the Intelligent Light System.

You can use this function to switch between symmetrical and asymmetrical dipped beam (▷ page 121).

- ▶ Press [⌂] on the steering wheel to open the menu list.
- ▶ Press [▼] or [▲] on the steering wheel to select the Settings menu.
- ▶ Confirm by pressing [OK] on the steering wheel.
- ▶ Press [▼] or [▲] to select the Lights submenu.
- ▶ Press [OK] to confirm.
- ▶ Press [▼] or [▲] to select the Dipped beams Setting for function.
  You will see the selected setting, right-side traffic or left-side traffic.
- ▶ Press [OK] to save the setting.
  If you change the setting, conversion does not take place until the next time the vehicle is stationary.

If you set the dipped-beam headlamps for driving on the right/left, then motorway mode and the extended range foglamps are unavailable. These are deactivated only if the setting for driving on the left/right is set opposite to your vehicle's country version.

A qualified specialist workshop can set the dipped-beam headlamps for driving on the left/right.

Instrument cluster submenu

Selecting the unit of measurement for distance

The Display unit Speed-/odometer function allows you to choose whether certain displays appear in kilometres or miles on the multifunction display.

- ▶ Press [⌂] on the steering wheel to open the menu list.
- ▶ Press [▼] or [▲] on the steering wheel to select the Settings menu.
- ▶ Confirm by pressing [OK] on the steering wheel.
- ▶ Press [▼] or [▲] to select the Instrument cluster submenu.
- ▶ Press [OK] to confirm.
- ▶ Press [▼] or [▲] to select the Display unit Speed-/odometer function.
  The current setting km or Miles appears.
- ▶ Press [OK] to save the setting.

The selected unit of measurement for distance applies to the following:

- digital speedometer on the Trip menu
- total distance recorder and the trip meter
- trip computer
- current consumption and the range
- range
- navigation instructions on the Navi menu
- cruise control
- speed limiter
- Distance Pilot DISTRONIC with Steering Pilot
- ASSYST PLUS service interval display

Switching the additional speedometer on/off

United Kingdom: this function is unavailable. The additional speedometer is always switched on.

If the additional speedometer is switched on, the speed is shown in the status bar of the multifunction display instead of the outside temperature.

The speed display is inverse to your speedometer.

- ▶ Press [⌂] on the steering wheel to open the menu list.
- ▶ Press [▼] or [▲] on the steering wheel to select the Settings menu.
- ▶ Confirm by pressing [OK] on the steering wheel.
- ▶ Press [▼] or [▲] to select the Instrument cluster submenu.
- ▶ Press [OK] to confirm.
- ▶ Press [▼] or [▲] to select the Digital speedo [km/h] function.
  The current selection appears.
- ▶ **To activate/deactivate:** press [OK] again.

Vehicle submenu

Setting the speed limiter

- Press ⌂ on the steering wheel to open the menu list.
- Press ▼ or ▲ on the steering wheel to select the Settings menu.
- Confirm by pressing OK on the steering wheel.
- Press ▼ or ▲ to select the Vehicle submenu.
- Press OK to confirm.
- Press ▼ or ▲ to select the Limit speed (winter tyres) function.
  The current setting appears.
- Press OK to confirm.
- Press the ▼ or ▲ button to adjust the speed limiter in increments of ten (160 km/h to 240 km/h). The Off setting switches the speed limiter off.
- Press OK to store the entry.

Further information about the speed limiter (▷ page 243).

Restoring the factory settings

- Press ⌂ on the steering wheel to open the menu list.
- Press ▼ or ▲ on the steering wheel to select the Settings menu.
- Confirm by pressing OK on the steering wheel.
- Press ▼ or ▲ to select the Factory settings submenu.
- Press OK to confirm.
  The Reset all settings? function appears.
- Press ▼ or ▲ to select No or Yes.
- Press OK to confirm the selection.
  If you have selected Yes, the multifunction display shows a confirmation message.

For safety reasons, not all functions will be reset: the Limit speed (winter tyres) speed limiter function can only be set on the Vehicle submenu.

AMG menu (Mercedes-AMG vehicles)

Warm-up

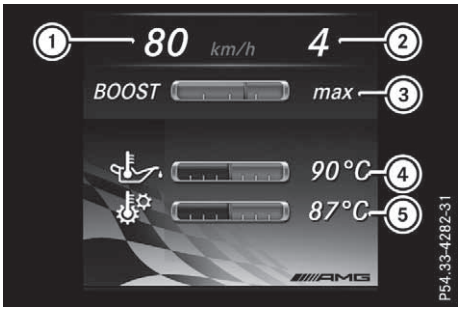

① Digital speedometer
② Gear indicator
③ Charge-air pressure
④ Engine oil temperature
⑤ Transmission oil temperature

- Press ⌂ on the steering wheel to open the menu list.
- Press ▼ or ▲ on the steering wheel to select the AMG menu.
- Confirm by pressing OK on the steering wheel.
  Engine and transmission fluid temperatures: when the engine and transmission are at normal operating temperature, oil temperatures ④ and ⑤ are displayed in white on the multifunction display.
  If the multifunction display shows oil temperature ④ or ⑤ in blue, the engine or the transmission are not yet at normal operating temperature. Avoid using the full output of the engine during this time.

Traffic Sign Assist display



- ▶ Switch on the display function for notes and traffic signs (▷ page 254).
- ▶ Press [⌂] on the steering wheel to open the menu list.
- ▶ Press the [▼] or [▲] button on the steering wheel to select the AMG menu.
- ▶ Confirm by pressing [OK] on the steering wheel.
- ▶ Press the [▲] button repeatedly until Traffic Sign Assist appears.

G-Meter



While the vehicle is in motion, the G-Meter shows the forces that are exerted on the driver both laterally and in the direction of travel.

The maximum values are indicated in red in the guideline system.

- ▶ Press [⌂] on the steering wheel to open the menu list.
- ▶ Press [▼] or [▲] on the steering wheel to select the AMG menu.
- ▶ Confirm by pressing [OK] on the steering wheel.
- ▶ Press the [▲] button repeatedly until the G-Meter appears.

  The maximum values of the G-Meter are saved.
- ▶ **To reset the G-Meter:** press [OK] again.
- ▶ Using [▼] or [▲] select Yes on the steering wheel.
- ▶ Press [OK] to confirm.
  The maximum values of the G-Meter are deleted.

If the ignition remains switched off for longer than four hours, the G-Meter will be automatically reset.

SETUP

Mercedes-AMG C 63/AMG C 63 S



(Example)

① Mercedes-AMG C 63: Drive Comfort/Sport/Sport +
Mercedes-AMG C 63 S: Drive Comfort/Sport/Sport +/Race
② Suspension Comfort/Sport/Sport +
③ Transmission D/M
④ Exhaust system Comfort/Sport +
⑤ ESP® On/Off or SPORT handling mode Sport

SETUP displays the following functions and settings:

- gear indicator
- digital speedometer
- drive system setting
- suspension mode
- transmission position
- exhaust flap position
- ESP® (Electronic Stability Program) status

Mercedes-AMG C 43 4MATIC

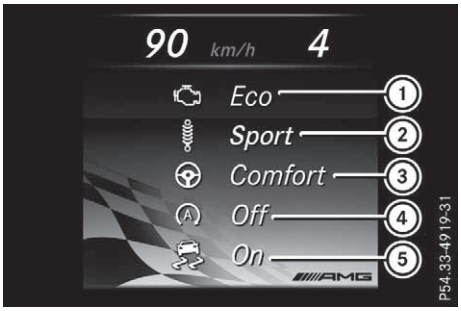

(Example)

① Drive Eco/Comfort/Sport/Sport +
② Suspension Comfort/Sport/Sport +
③ Steering Comfort/Sport
④ ECO Start/Stop Active/Inactive/Off
⑤ ESP® On/Off or SPORT handling mode Sport

SETUP displays the following functions and settings:

- gear indicator
- digital speedometer
- drive system setting
- suspension mode
- steering setting
- setting of the ECO start/stop function
- ESP® (Electronic Stability Program) status

Select SETUP

▶ Use [⌂] on the steering wheel to call up the menu list.
▶ Press [▼] or [▲] on the steering wheel to select the AMG menu.
▶ Confirm by pressing [OK] on the steering wheel.
▶ Press [▲] repeatedly until SETUP appears.

RACE TIMER

Displaying and starting the RACE TIMER



① Lap
② RACE TIMER

The RACE TIMER is intended only for use on a designated race track. Do not use the function on public roads.

If the engine is running or the ignition is switched on, you can start the RACE TIMER.

▶ Use [⌂] on the steering wheel to call up the menu list.
▶ Press [▼] or [▲] on the steering wheel to select the AMG menu.
▶ Confirm by pressing [OK] on the steering wheel.
▶ Press the [▼] or [▲] button repeatedly until the RACE TIMER appears.
▶ **To start:** press [OK] to start the RACE TIMER.

Starting a new lap



① Lap
② RACE TIMER
③ Quickest lap time

- Press the ▼ or ▲ button to select New Lap.
- Press OK to confirm.

A maximum of 32 laps may be stored.

Stopping the RACE TIMER



- Press ▼ or ▲ to select Stop.
- Press OK to confirm.

Continuing the RACE TIMER



- Press ▼ or ▲ to select Continue.
- Press OK to confirm.

Resetting the RACE TIMER



- Press ▼ or ▲ to select Stop.
  The RACE TIMER is stopped.
- Press ▼ or ▲ to select Reset.
- Press OK to confirm.
  All laps are deleted.

Lap evaluation

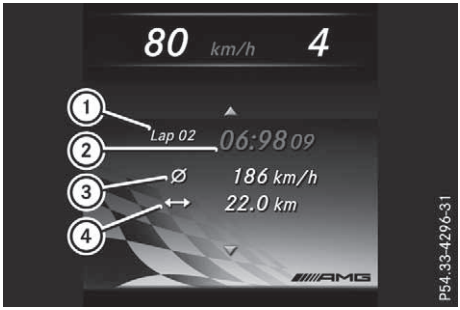

① Lap
② Lap time
③ Average lap speed
④ Lap length

This function is only available if you have stored at least two laps and have stopped the RACE-TIMER.

- Use ⌂ on the steering wheel to call up the list of menus.
- Press ▼ or ▲ on the steering wheel to select the AMG menu.
- Confirm by pressing OK on the steering wheel.
- Press the ▼ or ▲ button to select Lap List.
- Press OK to confirm.
  The lap evaluation appears.
- Press the ▲ or ▼ button to select a different lap evaluation.
  The fastest lap is indicated by flashing symbol ①.

Display messages

Introduction

General notes

Display messages appear in the multifunction display.

Display messages with graphic symbols are simplified in the Owner's Manual and may differ from the symbols in the multifunction display.

Please respond in accordance with the display messages and follow the additional notes in this Owner's Manual.

With certain display messages, you will also hear a warning tone.

You can hide the display messages. The display messages are then stored in the message memory. Rectify the cause of a display message as soon as possible.

When you stop and park the vehicle, please observe the notes on:

- HOLD function (▷ page 200)
- Parking (▷ page 180)

Hiding display messages

▶ Press the OK or ⮌ button on the steering wheel.
The multifunction display hides the display message.

High-priority display messages are shown in red in the multifunction display. Some high-priority display messages cannot be hidden.

The multifunction display shows these messages continuously until the causes for the messages have been remedied.

Message memory

The on-board computer saves certain display messages in the **message memory**. You can call up the display messages:

▶ Press ⌂ on the steering wheel to open the menu list.
▶ Press ▼ or ▲ on the steering wheel to select the Service menu.
▶ Confirm by pressing OK on the steering wheel.
▶ Press ▼ or ▲ to select the message memory.
If there are no display messages, the No messages display appears on the multifunction display.
When there are display messages, the number of stored messages appears.
▶ Press OK to confirm.
▶ Press ▼ or ▲ to scroll through the display messages.

Safety systems

Display messages	Possible causes/consequences and ▶ Solutions
 currently unavailable See Owner's Manual	ABS (Anti-lock Braking System) and ESP® (Electronic Stability Program) are temporarily unavailable. Other driving and driving safety systems may also be malfunctioning. In addition, the [ ] and [ ] warning lamps light up on the instrument cluster. For example, the on-board voltage may be insufficient. **⚠ WARNING** The brake system continues to function normally, but without the functions listed above. The wheels could therefore lock if you brake hard, for example. The steerability and braking characteristics may be severely affected. The braking distance may increase in an emergency braking situation. If ESP® is not operational, ESP® is unable to stabilise the vehicle. There is an increased risk of skidding and/or accident. ▶ Drive on carefully. Carefully drive on a suitable stretch of road, making gentle steering movements at speeds of above 20 km/h. If the display message disappears, the functions mentioned above are available again. If the multifunction display still shows the display message: ▶ Drive on carefully. ▶ Consult a qualified specialist workshop immediately.
 inoperative See Owner's Manual	ABS and ESP® are malfunctioning. Other driving and driving safety systems may also be malfunctioning. In addition, the [ ], [ ] and [ ] warning lamps may light up on the instrument cluster. **⚠ WARNING** The brake system continues to function normally, but without the functions listed above. The wheels could therefore lock if you brake hard, for example. The steerability and braking characteristics may be severely affected. The braking distance may increase in an emergency braking situation. If ESP® is not operational, ESP® is unable to stabilise the vehicle. There is an increased risk of skidding and/or accident. ▶ Drive on carefully. ▶ Consult a qualified specialist workshop immediately.

Display messages	Possible causes/consequences and ▶ Solutions
 inoperative See Owner's Manual	ESP® is malfunctioning. Other driving and driving safety systems may also be malfunctioning. The  warning lamp also lights up on the instrument cluster. ⚠ **WARNING** The brake system continues to function normally, but without the functions listed above. The braking distance may thus increase in an emergency braking situation. If ESP® is not operational, ESP® is unable to stabilise the vehicle. There is an increased risk of skidding and/or accident. ▶ Drive on carefully. ▶ Consult a qualified specialist workshop immediately.
 currently unavailable See Owner's Manual	ESP® is temporarily unavailable. Other driving and driving safety systems may also be malfunctioning. The  warning lamp also lights up on the instrument cluster. The self-diagnosis function, for example, may not be complete. ⚠ **WARNING** The brake system continues to function normally, but without the functions listed above. The wheels could therefore lock if you brake hard, for example. The braking distance may thus increase in an emergency braking situation. If ESP® is not operational, ESP® is unable to stabilise the vehicle. There is an increased risk of skidding and/or accident. ▶ Carefully drive on a suitable stretch of road, making gentle steering movements at speeds of above 20 km/h. If the display message disappears, the functions mentioned above are available again. If the multifunction display still shows the display message: ▶ Drive on carefully. ▶ Consult a qualified specialist workshop immediately.

Display messages	Possible causes/consequences and ▶ Solutions
 inoperative See Owner's Manual	EBD (electronic brake force distribution), ABS and ESP® are faulty. Other driving and driving safety systems may also be malfunctioning. In addition, the  and  warning lamps light up on the instrument cluster and a warning tone sounds. ⚠ **WARNING** The brake system continues to function normally, but without the functions listed above. The front and rear wheels could therefore lock if you brake hard, for example. The steerability and braking characteristics may be severely affected. The braking distance may increase in an emergency braking situation. If ESP® is not operational, ESP® is unable to stabilise the vehicle. There is an increased risk of skidding and/or accident. ▶ Drive on carefully. ▶ Consult a qualified specialist workshop immediately.
 Brake immediately	Vehicles with manual transmission: A malfunction has occurred while the HOLD function was activated. A tone may also sound at regular intervals. If you attempt to lock the vehicle, the tone becomes louder. You cannot start the engine. ▶ Paying attention to the traffic situation, immediately depress the brake pedal firmly and hold until the display message disappears. ▶ Secure the vehicle against rolling away (▷ page 180). You can restart the engine.
 Turn on the ignition to release the parking brake	Red indicator lamp  lights up. You attempted to release the electric parking brake while the ignition was switched off. ▶ Switch the ignition on.
 Release parking brake	Red indicator lamp  flashes and a warning tone sounds. A condition for automatic release of the electric parking brake is not fulfilled (▷ page 183). You are driving with the electric parking brake applied. ▶ Release the electric parking brake manually.
	Red indicator lamp  flashes and a warning tone sounds. You are initiating emergency braking using the electric parking brake (▷ page 183).

Display messages	Possible causes/consequences and ▶ Solutions
 Parking brake See Owner's Manual	Yellow warning lamp (Ⓟ) lights up. The electric parking brake is malfunctioning. **To apply:** ▶ Switch the ignition off. ▶ Press the electric parking brake handle for at least ten seconds. ▶ **Vehicles with manual transmission:** engage first gear. ▶ **Vehicles with automatic transmission:** shift the transmission to position P. ▶ Consult a qualified specialist workshop.
	Yellow warning lamp (Ⓟ) and red indicator lamp (Ⓟ) are lit. The electric parking brake is malfunctioning. **To release:** ▶ Switch the ignition off and then on again. ▶ Release the electric parking brake manually. or ▶ Release the electric parking brake automatically (▷ page 183). If the electric parking brake still cannot be released: ▶ Do not drive on. ▶ Consult a qualified specialist workshop.
	Red indicator lamp (Ⓟ) flashes and the yellow warning lamp (Ⓟ) is lit. The electric parking brake is malfunctioning. **To release:** ▶ Switch the ignition off and then on again. ▶ Release the electric parking brake manually. **To apply:** ▶ Switch the ignition off and then on again. ▶ Apply the electric parking brake manually. If red indicator lamp (Ⓟ) continues to flash: ▶ Do not drive on. ▶ Secure the vehicle against rolling away (▷ page 385). ▶ **Vehicles with manual transmission:** engage first gear. ▶ **Vehicles with automatic transmission:** shift the transmission to position P. ▶ Turn the front wheels towards the kerb. ▶ Consult a qualified specialist workshop.

Display messages	Possible causes/consequences and ▶ Solutions
	Yellow warning lamp (P) lights up. Red indicator lamp (P) flashes for about ten seconds after the electric parking brake has been applied or released. It then goes out or remains lit. The electric parking brake is malfunctioning. ▶ Switch the ignition off and then on again. ▶ Apply the electric parking brake. If you cannot apply the electric parking brake: ▶ **Vehicles with manual transmission:** engage first gear. ▶ **Vehicles with automatic transmission:** shift the transmission to position P. ▶ Consult a qualified specialist workshop. If it is not possible to release the electric parking brake manually: ▶ Release the electric parking brake automatically (▷ page 183). If the electric parking brake still cannot be released: ▶ Consult a qualified specialist workshop.
	Yellow warning lamp (P) lights up. If you manually apply or release the electric parking brake, red indicator lamp (P) flashes. The electric parking brake is malfunctioning. The electric parking brake cannot be applied manually. ▶ **Vehicles with manual transmission:** switch off the ignition. The electric parking brake is applied automatically. ▶ **Vehicles with automatic transmission:** shift the transmission to position P as the electric parking brake is not applied automatically. ▶ Consult a qualified specialist workshop. If it is not possible to release the electric parking brake manually: ▶ Release the electric parking brake automatically (▷ page 183). If you do not wish the electric parking brake to be applied, leave the ignition switched on, e.g. when washing the vehicle in an automatic car wash or when having the vehicle towed. Exception: when having the vehicle towed with the rear axle raised.

Display messages	Possible causes/consequences and ▶ Solutions
 Parking brake inoperative	Yellow warning lamp Ⓟ lights up. Red indicator lamp Ⓟ flashes for about ten seconds after the electric parking brake has been applied or released. It then goes out or remains lit. The electric parking brake is malfunctioning, e.g. because of overvoltage or undervoltage. ▶ Rectify the cause of the overvoltage or undervoltage, e.g. by charging the battery or restarting the engine. ▶ Apply or release the electric parking brake. If the electric parking brake still cannot be applied or released: ▶ Switch the ignition off and then on again. ▶ Apply or release the electric parking brake. If the electric parking brake still cannot be released: ▶ Consult a qualified specialist workshop. If the electric parking brake still cannot be applied: ▶ Consult a qualified specialist workshop.
	Red indicator lamp Ⓟ flashes and yellow warning lamp Ⓟ is lit. The electric parking brake cannot be applied manually. ▶ **Vehicles with manual transmission:** engage first gear. ▶ **Vehicles with automatic transmission:** shift the transmission to position P. ▶ Consult a qualified specialist workshop.
 Check brake fluid level	There is insufficient brake fluid in the brake fluid reservoir. In addition, red warning lamp Ⓘ lights up on the instrument cluster and a warning tone sounds. ⚠ **WARNING** Braking efficiency may be impaired. There is a risk of an accident. ▶ Stop the vehicle safely as soon as possible, paying attention to road and traffic conditions. Do not drive on. ▶ Secure the vehicle against rolling away (▷ page 180). ▶ Consult a qualified specialist workshop. ▶ Do not top up the brake fluid. This does not correct the fault.
 Check brake pad wear	The brake pads/linings have reached their wear limit. ▶ Consult a qualified specialist workshop.
 Inoperative	Vehicles with Audio 20 multimedia system: One or more main features of the Mercedes-Benz Contact system is/are malfunctioning. One or more main functions of the Mercedes me connect system is/are malfunctioning. ▶ Consult a qualified specialist workshop.

Display messages	Possible causes/consequences and ▶ Solutions
SOS Inoperative	Vehicles with COMAND Online multimedia system: One or more main functions of the Mercedes me connect system is/are malfunctioning. ▶ Consult a qualified specialist workshop.
Active Brake Assist Functions currently limited See Owner's Manual	Active Brake Assist is temporarily inoperative. Possible causes: • the radar sensor system is temporarily inoperative, e.g. due to electromagnetic radiation emitted by nearby TV or radio stations or other sources of electromagnetic radiation • the system is outside the operating temperature range • the on-board voltage is too low Once the causes listed above no longer apply, the display message disappears. Active Brake Assist is operational again. If the display message does not disappear: ▶ Stop the vehicle, paying attention to road and traffic conditions. ▶ Secure the vehicle against rolling away (▷ page 180). ▶ Restart the engine.
Active Brake Assist Functions limited See Owner's Manual	Active Brake Assist is unavailable due to a malfunction. Adaptive Brake Assist may also have failed. ▶ Consult a qualified specialist workshop immediately.
PRE-SAFE inoperative See Owner's Manual	Important PRE-SAFE® functions have failed. All other occupant safety systems, e.g. airbags, remain available. ▶ Consult a qualified specialist workshop immediately.

Display messages	Possible causes/consequences and ▶ Solutions
Active Brake Assist Functions currently limited See Owner's Manual	Active Brake Assist with cross-traffic function is temporarily inoperative. Possible causes: • the function is impaired due to heavy rain or snow • the radar sensor system is temporarily inoperative, e.g. due to electromagnetic radiation emitted by nearby TV or radio stations or other sources of electromagnetic radiation • the system is outside the operating temperature range • the on-board voltage is too low • Mercedes-AMG vehicles: ESP® is deactivated Once the causes listed above no longer apply, the display message disappears. Active Brake Assist with cross-traffic function is operational again. If the display message does not disappear: ▶ Stop the vehicle, paying attention to road and traffic conditions. ▶ Secure the vehicle against rolling away (▷ page 180). ▶ Restart the engine. ▶ Mercedes-AMG vehicles: reactivate ESP® (▷ page 77).
Active Brake Assist Functions limited See Owner's Manual	Active Brake Assist with cross-traffic function is unavailable due to a malfunction. ▶ Consult a qualified specialist workshop immediately.

Display messages	Possible causes/consequences and ▶ Solutions
Radar sensors dirty See Owner's Manual	The radar sensor system is malfunctioning. Possible causes: • dirt on sensors • heavy rain or snow • driving on inter-urban roads without traffic or infrastructure, e.g. in desert-like areas At least one driving system or driving safety system is malfunctioning or is temporarily unavailable: • Active Brake Assist with cross-traffic function • Active Brake Assist • Active Lane Keeping Assist • Active Blind Spot Assist • Distance Pilot DISTRONIC with Steering Pilot If the front radar system sensor is dirty, Active Blind Spot Assist will not perform a course-correcting brake application. Once the cause of the problem is no longer present, the driving and driving safety systems will be available again. The display message disappears. If the display message does not disappear: ▶ Stop the vehicle, paying attention to road and traffic conditions. ▶ Secure the vehicle against rolling away (▷ page 180). ▶ Switch off the engine. ▶ Clean all sensors (▷ page 351). ▶ Restart the engine. The display message disappears.
Restraint sys. malfunction Consult workshop	The restraint system is malfunctioning. The warning lamp also lights up on the instrument cluster. ⚠ **WARNING** The airbags or belt tensioners may either be triggered unintentionally or, in the event of an accident, may not be triggered. This poses an increased risk of injury. ▶ Consult a qualified specialist workshop immediately. Further information on the restraint system (▷ page 45).
Front left malfunction Consult workshop or Front right malfunction Consult workshop	The front left or right restraint system is malfunctioning. The warning lamp also lights up on the instrument cluster. ⚠ **WARNING** The airbags or belt tensioners may either be triggered unintentionally or, in the event of an accident, may not be triggered. This poses an increased risk of injury. ▶ Consult a qualified specialist workshop immediately.

Display messages	Possible causes/consequences and ▶ Solutions
 Rear left malfunction Consult workshop or Rear right malfunction Consult workshop	The rear left or right restraint system is malfunctioning. The  warning lamp also lights up on the instrument cluster. **⚠ WARNING** The airbags or belt tensioners may either be triggered unintentionally or, in the event of an accident, may not be triggered. This poses an increased risk of injury. ▶ Consult a qualified specialist workshop immediately.
 Rear centre malfunction Consult workshop	The rear centre restraint system is malfunctioning. The  warning lamp also lights up on the instrument cluster. **⚠ WARNING** The airbags or belt tensioners may either be triggered unintentionally or, in the event of an accident, may not be triggered. This poses an increased risk of injury. ▶ Consult a qualified specialist workshop immediately.
 Left windowbag malfunction Consult workshop or Right windowbag malfunction Consult workshop	The left-hand or right-hand windowbag is malfunctioning. The  warning lamp also lights up on the instrument cluster. **⚠ WARNING** The left-hand or right-hand windowbag may either be triggered unintentionally or, in the event of an accident, not triggered at all. This poses an increased risk of injury. ▶ Consult a qualified specialist workshop immediately.

Display messages	Possible causes/consequences and ▶ Solutions
Front-passenger airbag disabled See Owner's Manual	The front-passenger front airbag is disabled during the journey although: • an adult or • a person of the corresponding stature is on the front-passenger seat If additional forces are applied to the seat, the weight the system detects may be too low. ⚠ **WARNING** The front-passenger front airbag does not deploy during an accident. This poses an increased risk of injury. ▶ Stop the vehicle safely as soon as possible, paying attention to road and traffic conditions. ▶ Secure the vehicle against rolling away (▷ page 180). ▶ Switch the ignition off. ▶ Have the vehicle occupant on the front-passenger seat step out of the vehicle. ▶ Make sure that the seat is unoccupied, close the front-passenger door and switch on the ignition. ▶ Observe the PASSENGER AIR BAG indicator lamps on the centre console and the multifunction display and check the following: Seat unoccupied and ignition switched on: • a self-diagnosis is carried out. The PASSENGER AIR BAG OFF and PASSENGER AIR BAG ON indicator lamps must light up simultaneously for approximately six seconds. • the PASSENGER AIR BAG OFF indicator lamp must then light up and remain lit after the self-diagnosis. If the indicator lamp is on, the automatic front-passenger front airbag deactivation system has disabled the front-passenger front airbag. (▷ page 53) • the Front-passenger airbag enabled See Owner's Manual or Front-passenger airbag disabled See Owner's Manual display messages must not appear on the multifunction display. ▶ Wait for a period of at least 60 seconds until the necessary system checks have been completed. ▶ Make sure that the display messages do not appear on the multifunction display. If these conditions are met, the front-passenger seat can be occupied again. Whether the PASSENGER AIR BAG OFF indicator lamp remains lit or goes out depends on how the automatic front-passenger front airbag deactivation system classifies the occupant. If the conditions are not met, the system is not operating correctly. ▶ Consult a qualified specialist workshop immediately. Further information on the automatic front-passenger front airbag deactivation system (▷ page 53).

Display messages	Possible causes/consequences and ▶ Solutions
Front-passenger airbag enabled See Owner's Manual	The front-passenger front airbag is enabled during the journey although: • a child, a small adult or an object weighing less than the system weight threshold is located on the front-passenger seat or • the front-passenger seat is not occupied The system may detect objects or forces that are placing additional weight on the seat. ⚠ **WARNING** The front-passenger front airbag may deploy unintentionally. This poses an increased risk of injury. ▶ Stop the vehicle safely as soon as possible, paying attention to road and traffic conditions. ▶ Secure the vehicle against rolling away (▷ page 180). ▶ Switch the ignition off. ▶ Open the front-passenger door. ▶ Remove the child and child seat from the front-passenger seat. ▶ Make sure that no objects are present that are applying additional weight to the seat. The system might otherwise detect the additional weight and interpret the vehicle seat occupant's weight as greater than it actually is. ▶ Make sure that the seat is unoccupied, close the front-passenger door and switch on the ignition. ▶ Observe the PASSENGER AIR BAG indicator lamps on the centre console and the multifunction display and check the following: Seat unoccupied and ignition switched on: • a self-diagnosis is carried out. The PASSENGER AIR BAG OFF and PASSENGER AIR BAG ON indicator lamps must light up simultaneously for approximately six seconds. • the PASSENGER AIR BAG OFF indicator lamp must then light up and remain lit after the self-diagnosis. If the indicator lamp is on, the automatic front-passenger front airbag deactivation system has disabled the front-passenger front airbag. (▷ page 53) • the Front-passenger airbag enabled See Owner's Manual or Front-passenger airbag disabled See Owner's Manual display messages must not appear on the multifunction display. ▶ Wait for a period of at least 60 seconds until the necessary system checks have been completed. ▶ Make sure that the display messages do not appear on the multifunction display. If these conditions are met, the front-passenger seat can be occupied again. Whether the PASSENGER AIR BAG OFF indicator lamp remains lit or goes out depends on how the automatic front-passenger front airbag deactivation system classifies the occupant. If the conditions are not met, the system is not operating correctly. ▶ Consult a qualified specialist workshop immediately.

Display messages	Possible causes/consequences and ▶ Solutions
	Further information on the automatic front-passenger front airbag deactivation system (▷ page 53).

Lights

Display messages	Possible causes/consequences and ▶ Solutions
 Left dipped beam (Example)	The bulb in question is faulty. ▶ Consult a qualified specialist workshop. or ▶ Check whether you are permitted to replace the bulb yourself (▷ page 128). ⓘ LED light bulbs: the display message for the corresponding lamp appears only when all the LEDs in the lamp have failed.
 Active Light System inoperative	The Active Light System is malfunctioning. ▶ Consult a qualified specialist workshop.
 Intell. Light System inoperative	The Intelligent Light System is malfunctioning. The lighting system continues to function properly without the functions of the Intelligent Light System. ▶ Consult a qualified specialist workshop.
 Malfunction See Owner's Manual	The exterior lighting is faulty. ▶ Consult a qualified specialist workshop.
	Vehicles with trailer tow hitch: a fuse may have blown. ▶ Stop the vehicle, paying attention to road and traffic conditions. ▶ Secure the vehicle against rolling away (▷ page 180). ▶ Check the fuses (▷ page 372). ▶ If necessary, replace the blown fuse. Observe the warning notes as you do so. If the display message still appears: ▶ Consult a qualified specialist workshop.
 AUTO lights inoperative	The light sensor is malfunctioning. ▶ Consult a qualified specialist workshop.
 Switch off lights	You are leaving the vehicle and the lights are still switched on. A warning tone also sounds. ▶ Turn the light switch to the AUTO position.

Display messages	Possible causes/consequences and ▶ Solutions
 Switch on headlamps	You are driving without dipped-beam headlamps. ▶ Turn the light switch to the  or AUTO position.
Adaptive Main-beam Assist currently unavailable See Owner's Manual	Adaptive Highbeam Assist is deactivated and temporarily inoperative. Possible causes: • the windscreen is dirty in the camera's field of vision • visibility is impaired due to heavy rain, snow or fog ▶ Clean the windscreen. If the system detects that the camera is fully operational again, the Adaptive Main-beam Assist available again display message is shown. Adaptive Highbeam Assist is operational again.
Adaptive Main-beam Assist inoperative	Adaptive Highbeam Assist is malfunctioning. ▶ Consult a qualified specialist workshop.
Adaptive Highbeam Assist Plus currently unavailable See Owner's Manual	Adaptive Highbeam Assist Plus is deactivated and temporarily inoperative. Possible causes: • the windscreen is dirty in the camera's field of vision • visibility is impaired due to heavy rain, snow or fog ▶ Clean the windscreen. If the system detects that the camera is fully operational again, the Adaptive Highbeam Assist Plus available again display message is shown. Adaptive Highbeam Assist Plus is operational again.
Adaptive Highbeam Assist Plus inoperative	Adaptive Highbeam Assist Plus is malfunctioning. ▶ Consult a qualified specialist workshop.

Engine

Display messages	Possible causes/consequences and ▶ Solutions
 Top up coolant See Owner's Manual	The coolant level is too low. ! Avoid making long journeys with too little coolant in the engine cooling system. The engine will otherwise be damaged. ▶ Top up the coolant, making sure to observe the warning notes (▷ page 345). **If you have to top up the coolant frequently:** ▶ Consult a qualified specialist workshop and have the engine cooling system checked.
	The fan motor is faulty. ▶ If the coolant temperature is below 120 °C, drive on to the nearest qualified specialist workshop. ▶ Avoid heavy loads on the engine as you do so, e.g. driving in mountainous terrain and stop-start traffic.
 Coolant Stop vehicle Switch engine off	The coolant is too hot. A warning tone also sounds. ⚠ **WARNING** Never drive with an overheated engine. Driving when your engine has overheated can cause any fluids that may have leaked into the engine compartment to catch fire. In addition, steam from an overheated engine can cause serious burns, which can occur just by opening the bonnet. There is a risk of injury. ▶ Stop the vehicle immediately, paying attention to road and traffic conditions, and switch off the engine. ▶ Secure the vehicle against rolling away (▷ page 180). ▶ Wait until the engine has cooled down. ▶ Make sure that the air supply to the engine radiator is not blocked, e.g. by frozen slush. ▶ Do not start the engine again until the display message disappears and the coolant temperature is below 120 °C. The engine may otherwise be damaged. ▶ Pay attention to the coolant temperature gauge. **If the temperature increases again:** ▶ Consult a qualified specialist workshop immediately. Under normal operating conditions and with the correct coolant level, the display may rise to 120 °C.

Display messages	Possible causes/consequences and ▶ Solutions
 See Owner's Manual	The battery is no longer being charged. A warning tone also sounds. Possible causes: • faulty alternator • torn poly-V-belt • a malfunction in the electronics ! Do not continue driving. The engine could otherwise overheat. ▶ Stop the vehicle immediately, paying attention to road and traffic conditions, and switch off the engine. ▶ Secure the vehicle against rolling away (▷ page 180). ▶ Consult a qualified specialist workshop.
 Stop vehicle See Owner's Manual	The battery is no longer being charged and the charge status is too low. A warning tone also sounds. ▶ Stop the vehicle immediately, paying attention to road and traffic conditions, and switch off the engine. ▶ Secure the vehicle against rolling away (▷ page 180). ▶ Observe the instructions in the  See Owner's Manual display message. ▶ Consult a qualified specialist workshop.
 Stop vehicle Leave engine running	The battery charge status is too low. ▶ Stop the vehicle safely as soon as possible, paying attention to road and traffic conditions. Do not drive on. ▶ Start the engine. ▶ Wait until the display message disappears before driving on.
 Start engine See Owner's Manual	The engine is off and the charge status is too low. ▶ Switch off any electrical consumers that you do not need, such as the rear window heating and interior lighting. ▶ Leave the engine running for a few minutes, or drive for an extended period. The battery charges.

Display messages	Possible causes/consequences and ▶ Solutions
 Check eng. oil lev. when next refuelling	The engine oil level has dropped to the minimum level. A warning tone also sounds. ! Avoid long journeys when there is too little coolant in the cooling system. Otherwise the engine will be damaged. ▶ Check the engine oil level when next refuelling at the latest (▷ page 343). ▶ If necessary, top up the engine oil (▷ page 344). **If you have to top up the engine oil frequently:** ▶ Consult a qualified specialist workshop and have the engine checked. Information on approved engine oils can be obtained from a qualified specialist workshop or on the internet at http://bevo.mercedes-benz.com.
 Add 1 litre engine oil when next refuelling	Mercedes-AMG C 63 vehicles: The engine oil level has dropped to the minimum level. ! Avoid long journeys when there is too little coolant in the cooling system. Otherwise the engine will be damaged. ▶ Check the engine oil level when next refuelling at the latest (▷ page 343). ▶ If necessary, top up the engine oil (▷ page 344). **If you have to top up the engine oil frequently:** ▶ Consult a qualified specialist workshop and have the engine checked. Information on approved engine oils can be obtained from a qualified specialist workshop or on the internet at http://bevo.mercedes-benz.com.
 Engine oil level Stop vehicle Switch engine off	Mercedes-AMG C 63 vehicles: The engine oil level is too low. There is a risk of engine damage. ▶ Stop the vehicle immediately, paying attention to road and traffic conditions, and switch off the engine. ▶ Secure the vehicle against rolling away (▷ page 180). ▶ Check the engine oil level (▷ page 343). ▶ If necessary, top up the engine oil (▷ page 344).
 Reserve fuel level	The fuel level has dropped into the reserve range. Operation of the auxiliary heating is deactivated if the fuel level drops into the reserve range. ▶ Refuel at the nearest filling station.
	There is very little fuel in the fuel tank. Operation of the auxiliary heating is deactivated. ▶ You must refuel at the nearest filling station.

Display messages	Possible causes/consequences and ▶ Solutions
 Replace air cleaner	Vehicles with a diesel engine: The engine air filter is dirty and must be replaced. ▶ Consult a qualified specialist workshop.
 Clean the fuel filter	Vehicles with a diesel engine: There is water in the fuel filter. The water must be drained off. ▶ Consult a qualified specialist workshop.
Refill AdBlue See Owner's Manual	The AdBlue® level has fallen below the reserve range. A warning tone also sounds. ▶ Refill AdBlue® as soon as possible (▷ page 177).
Refill AdBlue No start in ... mi	The AdBlue® level is sufficient only for the indicated distance. A warning tone also sounds. ▶ Refill AdBlue® immediately (▷ page 177). ⓘ If you drive the vehicle at speeds greater than 15 km/h, the Refill AdBlue No start in ... mi message disappears after approximately one minute.
Refill AdBlue Eng. start not possible	The AdBlue® tank is empty. A warning tone also sounds. You can no longer start the engine. ▶ Add at least 4.0 l of AdBlue® (▷ page 177). ▶ Turn the ignition on for approximately one minute. The system requires approximately one minute after refilling to detect the change in the AdBlue® level. ▶ Start the engine.
Check AdBlue See Owner's Manual	The AdBlue® system is malfunctioning. A warning tone also sounds. ▶ Consult a qualified specialist workshop.
Eng. start not possible in ... mi	The AdBlue® system is malfunctioning. A warning tone also sounds. ▶ Consult a qualified specialist workshop immediately.
Eng. start not possible	The AdBlue® system is malfunctioning. A warning tone also sounds. You can no longer start the engine. ▶ Consult a qualified specialist workshop immediately.

Driving systems

Display messages	Possible causes/consequences and ▶ Solutions
 ATTENTION ASSIST: Take a break!	Based on certain criteria, ATTENTION ASSIST has detected fatigue or increasing lapses in concentration on the part of the driver. A warning tone also sounds. ▶ If necessary, take a break. During long journeys, take regular breaks in good time so that you get enough rest.
 ATTENTION ASSIST inoperative	ATTENTION ASSIST is inoperative. ▶ Consult a qualified specialist workshop.
 Vehicle rising	The vehicle rises to the level you have selected.
 Vehicle rising Please wait	The vehicle level is too low when the vehicle is stationary. A warning tone also sounds. ▶ Do not pull away. The vehicle level is set when the display message disappears.
 Stop vehicle Vehicle too low	You have pulled away while the vehicle level was too low. AIRMATIC sets the vehicle to the selected level after a short period. ▶ Stop the vehicle, paying attention to road and traffic conditions. ▶ Secure the vehicle against rolling away (▷ page 180). ▶ Wait until the display message disappears before pulling away.
	AIRMATIC is faulty. A warning tone also sounds. ▶ Do not drive at speeds greater than 80 km/h. ▶ Make only slight steering movements. Otherwise, the front wings or the tyres could be damaged if the steering input is too great. ▶ Listen for scraping sounds. ▶ Stop the vehicle, paying attention to road and traffic conditions, and set a higher vehicle level. Depending on the fault, it may be possible to raise the vehicle. ▶ Consult a qualified specialist workshop.
 Malfunction	The AIRMATIC function is restricted. The vehicle's handling characteristics may be impaired. ▶ Do not drive at speeds greater than 80 km/h. ▶ Consult a qualified specialist workshop.

Display messages	Possible causes/consequences and ▶ Solutions
Lane Keeping Assist currently unavailable See Owner's Manual or Active Lane Keeping Assist currently unavailable See Owner's Manual	Lane Keeping Assist or Active Lane Keeping Assist is deactivated and temporarily inoperative. Possible causes: • the windscreen is dirty in the camera's field of vision • visibility is impaired due to heavy rain, snow or fog • there have been no lane markings for an extended period • the lane markings are worn away, dark or covered up, e.g. by dirt or snow Once the causes listed above no longer apply, the display message disappears. Lane Keeping Assist or Active Lane Keeping Assist is operational again. If the display message does not disappear: ▶ Stop the vehicle, paying attention to road and traffic conditions. ▶ Secure the vehicle against rolling away (▷ page 180). ▶ Clean the windscreen.
Lane Keeping Assist inoperative or Active Lane Keeping Assist inoperative	Lane Keeping Assist or Active Lane Keeping Assist is faulty. ▶ Consult a qualified specialist workshop.
Blind Spot Assist currently unavailable See Owner's Manual or Active Blind Spot Assist currently unavailable See Owner's Manual	Blind Spot Assist or Active Blind Spot Assist is temporarily inoperative. Possible causes: • the radar sensor system is outside the operating temperature range • the radar sensor system is temporarily inoperative, e.g. due to electromagnetic radiation emitted by nearby TV or radio stations or other sources of electromagnetic radiation Once the causes listed above no longer apply, the display message disappears. Blind Spot Assist or Active Blind Spot Assist is operational again. If the display message does not disappear: ▶ Stop the vehicle, paying attention to road and traffic conditions. ▶ Secure the vehicle against rolling away (▷ page 180). ▶ Restart the engine.
Blind Spot Assist not available when towing a trailer See Owner's Manual or Active Blind Spot Assist not available when towing a trailer See Owner's Manual	Blind Spot Assist or Active Blind Spot Assist is deactivated during trailer-towing. You have established the electrical connection between the trailer and your vehicle. ▶ Press OK on the steering wheel to confirm the display message.

Display messages	Possible causes/consequences and ▶ Solutions
Blind Spot Assist inoperative or Active Blind Spot Assist inoperative	Blind Spot Assist or Active Blind Spot Assist is faulty. ▶ Consult a qualified specialist workshop.
Parking Pilot cancelled	The driver's door is open. ▶ Repeat the parking space measurement and parking manoeuvre with the driver's door closed.
	You touched the multifunction steering wheel while steering intervention was active. ▶ While steering intervention is active, make sure not to touch the multifunction steering wheel.
	The vehicle has started to skid and ESP® has intervened. ▶ Use Parking Pilot again later (▷ page 205).
Parking Pilot inoperative	Parking Pilot is malfunctioning or faulty. ▶ Follow the instructions and helpful hints in the "Problems with Parking Assist PARKTRONIC" section (▷ page 213). If the multifunction display still shows the display message: ▶ Consult a qualified specialist workshop.
	Parking Pilot is unavailable or malfunctioning. ▶ Switch off the ignition and restart the engine. If the Parking Pilot continues to be unavailable (the P symbol does not appear on the multifunction display): ▶ Consult a qualified specialist workshop.
Park Assist ended	The vehicle is parked. A warning tone also sounds. The display message disappears automatically.
Traffic Sign Assist currently unavailable See Owner's Manual	Traffic Sign Assist is temporarily inoperative. Possible causes: • the windscreen is dirty in the camera's field of vision • visibility is impaired due to heavy rain, snow or fog ▶ Clean the windscreen. If the system detects that the camera is fully operational, the display message disappears. Traffic Sign Assist is operational again.
Traffic Sign Assist inoperative	Traffic Sign Assist is faulty. ▶ Consult a qualified specialist workshop.
HOLD Off	The HOLD function is deactivated. The vehicle has started to skid. A warning tone also sounds. ▶ Reactivate the HOLD function later (▷ page 201).

Display messages	Possible causes/consequences and ▶ Solutions
	The HOLD function is deactivated. When the brake pedal is firmly depressed, an activation condition is no longer fulfilled. A warning tone also sounds. ▶ Check the activation conditions for the HOLD function (▷ page 200).
Distance Pilot off	Distance Pilot DISTRONIC is deactivated (▷ page 197). If it was not deactivated by the driver, a warning tone also sounds.
Distance Pilot available again	Distance Pilot DISTRONIC is operational again after having been temporarily unavailable. You can now reactivate Distance Pilot DISTRONIC (▷ page 193).
Distance Pilot currently unavailable See Owner's Manual	Distance Pilot DISTRONIC is temporarily inoperative. Steering Pilot is also temporarily inoperative. Possible causes: • the radar sensor system is temporarily inoperative, e.g. due to electromagnetic radiation emitted by nearby TV or radio stations or other sources of electromagnetic radiation • the system is outside the operating temperature range • the on-board voltage is too low A warning tone also sounds. Once the causes listed above no longer apply, the display message disappears. Distance Pilot DISTRONIC is operational again. If the display message does not disappear: ▶ Stop the vehicle, paying attention to road and traffic conditions. ▶ Secure the vehicle against rolling away (▷ page 180). ▶ Restart the engine.
Distance Pilot inoperative	Distance Pilot DISTRONIC is faulty. The following may have also failed: • Active Brake Assist with cross-traffic function • Steering Pilot A warning tone also sounds. ▶ Consult a qualified specialist workshop.
Distance Pilot passive	You have depressed the accelerator pedal. Distance Pilot DISTRONIC is no longer controlling the speed of the vehicle. ▶ Remove your foot from the accelerator pedal.
Distance Pilot - - - mph	A condition for activating Distance Pilot DISTRONIC has not been met. ▶ Check the activation conditions for Distance Pilot DISTRONIC (▷ page 193).

Display messages	Possible causes/consequences and ▶ Solutions
Distance Pilot and Limiter inoperative	Distance Pilot DISTRONIC and the speed limiter are faulty. A warning tone also sounds. This means that Steering Pilot is also unavailable. ▶ Consult a qualified specialist workshop.
Steering Pilot currently unavailable See Owner's Manual	Steering Pilot is temporarily inoperative. Possible causes: • the windscreen is dirty in the camera's field of vision • visibility is impaired due to heavy rain, snow or fog • there have been no lane markings for a long time • the lane markings are worn away, dark or covered up, e.g. by dirt or snow Once the causes listed above no longer apply, the display message disappears. Steering Pilot is operational again. If the display message does not disappear: ▶ Stop the vehicle, paying attention to road and traffic conditions. ▶ Secure the vehicle against rolling away (▷ page 180). ▶ Clean the windscreen.
Steering Pilot inoperative	Steering Pilot is malfunctioning. However, the Distance Pilot DISTRONIC functions are still available. A warning tone also sounds. ▶ Consult a qualified specialist workshop.
Cruise control and Limiter inoperative	Cruise control and speed limiter are faulty. A warning tone also sounds. ▶ Consult a qualified specialist workshop.
Speed limit (winter tyres) XXX mph	You have reached the stored speed limit for winter tyres. It is not possible to exceed this speed. You can suppress the display message by pressing the OK button. The display message will not reappear until the ignition has been switched on again.
Limiter passive	As you depress the accelerator pedal beyond the point of resistance (kickdown), the speed limiter is switched to passive mode. The speed limitation is not active. ▶ Drive more slowly than the stored speed without kickdown. or ▶ Set a new speed. or ▶ Call up the last speed stored again. When the display message disappears, the speed limitation is active.

Display messages	Possible causes/consequences and ▶ Solutions
Limiter - - - mph	The speed limiter cannot be activated, since not all the activation conditions have been met. ▶ Check the activation conditions for the speed limiter (▷ page 190).
Cruise control - - - mph	• A condition for activating cruise control has not been met You have tried to store a speed below 30 km/h, for example • ESP® is deactivated The yellow ESP® OFF warning lamp is lit. ▶ If conditions permit, drive at a speed greater than 30 km/h and store the speed. or ▶ Check the activation conditions for cruise control (▷ page 188). or ▶ Reactivate ESP® (▷ page 253). or ▶ Reactivate ESP® in Mercedes-AMG vehicles (▷ page 77).
Cruise control off	Cruise control has been deactivated. If a warning tone also sounds, cruise control has deactivated automatically (▷ page 188).
120 km/h! Maximum speed exceeded	For certain countries only: the maximum speed has been exceeded. ▶ Drive more slowly.

Tyres

Display messages	Possible causes/consequences and ▶ Solutions
Tyre pressure Check tyres	The tyre pressure loss warning system has detected a significant loss in pressure. A warning tone also sounds. Possible cause: • you have changed the positions of the wheels and tyres or fitted new wheels and tyres • the tyre pressure in one or more tyres has dropped ⚠ **WARNING** Underinflated tyres pose the following risks: • the tyres may burst, especially as the load and vehicle speed increase • the tyres may wear excessively and/or unevenly, which may greatly impair tyre traction • the driving characteristics, as well as steering and braking, may be greatly impaired There is a risk of an accident. ▶ Stop the vehicle without making any sudden steering or braking manoeuvres. Pay attention to the traffic conditions as you do so. ▶ Secure the vehicle against rolling away (▷ page 180). ▶ Check the tyres and, if necessary, follow the instructions for a flat tyre (▷ page 358). ▶ Check and, if necessary, correct the tyre pressures. ▶ Restart the tyre pressure loss warning system when the tyre pressure is correct (▷ page 380).
Check tyre pressures then restart Run Flat Indicator	The tyre pressure loss warning system generated a display message and has not been restarted since. ▶ Set the correct tyre pressure in all four tyres. ▶ Restart the tyre pressure loss warning system (▷ page 380).
Run Flat Indicator inoperative	The tyre pressure loss warning system is faulty. ▶ Consult a qualified specialist workshop.
Rectify tyre pressure	The tyre pressure is too low in at least one of the tyres, or the tyre pressure difference between the wheels is too great. ▶ Check the tyre pressures at the next opportunity (▷ page 382). ▶ If necessary, correct the tyre pressure. ▶ Restart the tyre pressure monitor (▷ page 382).

Display messages	Possible causes/consequences and ▶ Solutions
Check tyre(s)	The tyre pressure in one or more tyres has dropped significantly. The wheel position is shown on the multifunction display. A warning tone also sounds. ⚠ **WARNING** Underinflated tyres pose the following risks: • the tyres may burst, especially as the load and vehicle speed increase • the tyres may wear excessively and/or unevenly, which may greatly impair tyre traction • the driving characteristics, as well as steering and braking, may be greatly impaired There is a risk of an accident. ▶ Stop the vehicle without making any sudden steering or braking manoeuvres. Pay attention to the traffic conditions as you do so. ▶ Secure the vehicle against rolling away (▷ page 180). ▶ Check the tyres and, if necessary, follow the instructions for a flat tyre (▷ page 358). ▶ Check the tyre pressure (▷ page 382). ▶ If necessary, correct the tyre pressure.
Warning tyre defect	The tyre pressure in one or more tyres has dropped suddenly. The wheel position is shown on the multifunction display. ⚠ **WARNING** If you drive with a flat tyre, there is a risk of the following hazards: • a flat tyre impairs the ability to steer or brake the vehicle • you could lose control of the vehicle • continued driving with a flat tyre will cause excessive heat build-up and possibly a fire There is a risk of an accident. ▶ Stop the vehicle without making any sudden steering or braking manoeuvres. Pay attention to the traffic conditions as you do so. ▶ Secure the vehicle against rolling away (▷ page 180). ▶ Check the tyres and, if necessary, follow the instructions for a flat tyre (▷ page 358).
Tyre press. monitor currently unavailable	No signals can be received from the tyre pressure sensors due to strong RF interference. The tyre pressure monitor is temporarily malfunctioning. ▶ Drive on. The tyre pressure monitor starts automatically as soon as the cause has been rectified.

Display messages	Possible causes/consequences and ▶ Solutions
Wheel sensor(s) missing	There is no signal from the tyre pressure sensor of one or several tyres. The pressure of the affected tyre is not shown on the multifunction display. ▶ Have the faulty tyre pressure sensor replaced at a qualified specialist workshop.
Tyre press. monitor inoperative No wheel sensors	The wheels fitted do not have suitable tyre pressure sensors. The tyre pressure monitor is deactivated. ▶ Fit wheels with suitable tyre pressure sensors. The tyre pressure monitor is activated after driving for a few minutes.
Tyre press. monitor inoperative	The tyre pressure monitor is faulty. ▶ Consult a qualified specialist workshop.
Tyre(s) overheated	The tyre temperature monitoring function is not available in all vehicles. At least one tyre is overheated. Affected tyres are shown in red. At temperatures close to the limit value, the tyres are shown in yellow. ▶ Drive more slowly.
Tyre(s) overheated Reduce speed	The tyre temperature monitoring function is not available in all vehicles. At least one tyre is overheated. ⚠ **WARNING** Overheated tyres can burst, particularly at high speed. ▶ Lower the speed so that the tyres can cool down.

Vehicle

Display messages	Possible causes/consequences and ▶ Solutions
To start engine, shift to either P or N	You attempted to start the engine with the transmission in position R or D. ▶ Shift the transmission to position P or N.
Apply brake to deselect Park (P) position	You attempted to shift the transmission to position D, R or N without depressing the brake pedal. ▶ Depress the brake pedal.
To shift out of P or N, depress brake and start engine	You attempted to shift the transmission out of position P or N into another transmission position with the engine switched off. ▶ Depress the brake pedal. ▶ Start the engine.

Display messages	Possible causes/consequences and ▶ Solutions
Apply brake to select R	You attempted to shift from position D to position R. ▶ Depress the brake pedal. ▶ Shift the transmission to position R.
Risk of vehicle rolling Driver door open and transmission not in P	The driver's door is open or not fully closed and the transmission is in position R, N or D. A warning tone also sounds. ⚠ WARNING The vehicle may roll away. There is a risk of an accident. ▶ Shift the transmission to position P. ▶ Secure the vehicle against rolling away (▷ page 180). ▶ Close the driver's door fully.
Only select Park (P) when vehicle is stationary	The vehicle is moving. ▶ Stop the vehicle, paying attention to road and traffic conditions. ▶ Shift the transmission to position P.
Without changing gear, consult workshop	You cannot change the transmission position due to a malfunction. A warning tone also sounds. If transmission position D is selected: ▶ Consult a qualified specialist workshop without shifting the transmission from position D. If transmission position R, N or P is selected: ▶ Secure the vehicle against rolling away (▷ page 180). ▶ Consult a qualified specialist workshop.
Reversing not poss. Consult workshop	You can no longer shift to transmission position R due to a malfunction. Transmission positions P, N or D continue to be available. A warning tone also sounds. ▶ Consult a qualified specialist workshop.
Transmission Malfunction Stop	A malfunction has occurred in the mechanical transmission components. A warning tone also sounds. The transmission shifts automatically to position N. ▶ Stop the vehicle, paying attention to road and traffic conditions. ▶ Shift the transmission to position P. ▶ Secure the vehicle against rolling away (▷ page 180). ▶ Consult a qualified specialist workshop.

Display messages	Possible causes/consequences and ▶ Solutions
Stop vehicle Leave engine running Wait Transmission cool-ing	The transmission has overheated. Pulling away can be temporarily impaired or not possible. ▶ Stop the vehicle safely as soon as possible, paying attention to road and traffic conditions. Do not drive on. ▶ Leave the engine running. ▶ Wait until the display message disappears before driving on.
Depress clutch fully to start engine	You attempted to start the engine without depressing the clutch pedal. ▶ Depress the clutch pedal. ▶ Restart the engine.
	The engine has stalled while pulling away, e.g. because the clutch pedal was released too quickly. ▶ Depress the clutch pedal again. The engine starts automatically. ▶ Slowly release the clutch pedal to pull away.
Clutch overheated Avoid pulling away Engage/disengage clutch quickly if req.	The clutch is under considerable load and the permitted operating temperature has been exceeded. A warning tone also sounds. Avoid frequent pulling away and driving at walking pace over longer distances. ▶ Stop the vehicle, paying attention to road and traffic conditions. ▶ Secure the vehicle against rolling away (▷ page 180). ▶ Leave the engine running. The clutch is cooled more quickly with the engine running. or ▶ If possible, drive on at a steady speed. ▶ Remove your foot from the clutch pedal and do not allow the clutch to slip. The clutch may also cool down during the journey. It may take several minutes for it to cool down. When the clutch has cooled down, the display message disappears. The clutch is fully operational again.
	The tailgate is open ⚠ **WARNING** When the engine is running, exhaust gases can enter the vehicle interior if the tailgate is open. There is a risk of poisoning. ▶ Close the tailgate.

Display messages	Possible causes/consequences and ▶ Solutions
	The bonnet is open. A warning tone also sounds. ⚠ **WARNING** The open bonnet may then block your view when the vehicle is in motion. There is a risk of an accident. ▶ Stop the vehicle safely as soon as possible, paying attention to road and traffic conditions. ▶ Secure the vehicle against rolling away (▷ page 180). ▶ Close the bonnet.
Active bonnet malfunction See Owner's Manual	The active bonnet (pedestrian protection) is inoperative due to a malfunction or because it has already been triggered. ▶ Consult a qualified specialist workshop.
	At least one door is open. A warning tone also sounds. ▶ Close all doors.
 Rear centre backrest not locked	Vehicle with through-loading feature in the rear bench seat: The centre rear seat backrest is not engaged. ▶ Push the backrest back until it engages.
 Check trailer hitch lock	The trailer tow hitch is not correctly engaged. A warning tone also sounds. ⚠ **WARNING** If the ball coupling is not engaged, the trailer may come loose. There is a risk of an accident. ▶ Stop the vehicle immediately, paying attention to road and traffic conditions, and switch off the engine. ▶ Secure the vehicle against rolling away (▷ page 180). ▶ Engage the ball coupling of the trailer tow hitch in the end position (▷ page 235).
 inoperative Battery low	The on-board voltage is too low The auxiliary heating (▷ page 146) has switched itself off. The auxiliary heating or remote activation of heating and ventilation systems cannot be switched on. ▶ Drive for a considerable distance. The battery charges. The auxiliary heating or remote activation of heating and ventilation systems is operational again as soon as the on-board voltage is sufficient.
 inoperative Refuel vehicle	There is too little fuel in the fuel tank. The auxiliary heating cannot be switched on (▷ page 146). ▶ Refuel at the nearest filling station.

Display messages	Possible causes/consequences and ▶ Solutions
 inoperative See Owner's Man.	The auxiliary heating is temporarily malfunctioning or faulty. ▶ When the vehicle is on a level surface and the engine has cooled down, make up to four attempts to switch on the auxiliary heating, waiting several minutes between each attempt (▷ page 146). If the auxiliary heating does not switch on: ▶ Consult a qualified specialist workshop.
 Power steering malfunction See Owner's Manual	The power steering assistance is faulty. A warning tone also sounds. ⚠ **WARNING** You will need to use more force to steer. There is a risk of an accident. ▶ Check whether you are able to apply the extra steering force required. **If you are able to steer safely:** ▶ Drive on carefully. ▶ Consult a qualified specialist workshop immediately. **If you are unable to steer safely:** ▶ Do not drive on. ▶ Consult a qualified specialist workshop.
 Steering malfunction See Owner's Manual	Vehicles with manual transmission: The electric steering lock is malfunctioning. ⚠ **WARNING** The steering may be locked by the electric steering lock. There is a risk of an accident. ▶ Stop the vehicle safely as soon as possible, paying attention to road and traffic conditions. ▶ Secure the vehicle against rolling away (▷ page 180). ▶ Do not drive on. ▶ Consult a qualified specialist workshop.
 Before starting the engine, turn the steering wheel.	Vehicles with manual transmission: The electric steering lock is malfunctioning. ▶ Remove the key from the ignition lock. ▶ To unlock the steering, move the steering wheel slightly. ▶ Insert the key into the ignition lock again.

Display messages	Possible causes/consequences and ▶ Solutions
Telephone No service	Your vehicle is outside the mobile phone network provider's transmitter/receiver range. ▶ Wait until the mobile phone operational readiness symbol appears on the multifunction display.
 Top up washer fluid	The washer fluid level in the washer fluid reservoir has dropped below the minimum. ▶ Top up the washer fluid (▷ page 345).

Key

Display messages	Possible causes/consequences and ▶ Solutions
 Key does not belong to vehicle	You have put the wrong key in the ignition lock. ▶ Use the correct key.
 Replace key	The key needs to be replaced. ▶ Consult a qualified specialist workshop.
 Change key batteries	The key battery is discharged. ▶ Replace the batteries (▷ page 88).
 Key not detected (white display message)	The key is currently undetected. ▶ Change the location of the key in the vehicle. If the key still cannot be detected: ▶ Insert the key into the ignition lock and turn it to the desired position.
 Key not detected (red display message)	The key is not in the vehicle. A warning tone also sounds. If the engine is switched off, you can no longer lock the vehicle centrally or start the engine. ▶ Stop the vehicle safely as soon as possible, paying attention to road and traffic conditions. ▶ Secure the vehicle against rolling away (▷ page 180). ▶ Locate the key. ▶ Press OK on the steering wheel to confirm the display message.

Display messages	Possible causes/consequences and ▶ Solutions
	Because there is interference from a strong source of radio waves, the key is not detected whilst the engine is running. A warning tone also sounds. ▶ Stop the vehicle safely as soon as possible, paying attention to road and traffic conditions. ▶ Secure the vehicle against rolling away (▷ page 180). ▶ Insert the key into the ignition lock and bring into key mode.
 Remove starting button, then insert key	The key is continually undetected. The key detection function has a temporary malfunction or is faulty. A warning tone also sounds. ▶ Insert the key into the ignition lock and turn it to the desired position. ▶ Consult a qualified specialist workshop.

Warning and indicator lamps on the instrument cluster

General notes

Some systems carry out a self-diagnosis when the ignition is switched on. In the process, several warning and indicator lamps may temporarily light up or flash. This is not an indication of any problem. These warning and indicator lamps only indicate a malfunction if they light up or flash after the engine is started or during a journey.

Safety

Seat belts

Warning/ indicator lamp	▷ Signal type Possible causes/consequences and ▶ Solutions
	▷ For certain countries only: the red seat belt warning lamp lights up for six seconds after the engine starts. The seat belt warning lamp reminds the driver and front passenger to fasten their seat belts. ▶ Fasten your seat belt (▷ page 49).
	▷ For certain countries only: the red seat belt warning lamp lights up after the engine starts. In addition, a warning tone sounds for up to six seconds. The driver's seat belt is not fastened. ▶ Fasten your seat belt (▷ page 49). The warning tone ceases.

Warning/ indicator lamp	▷ Signal type Possible causes/consequences and ▶ Solutions
	▷ The red seat belt warning lamp lights up after the engine starts, as soon as the driver's or the front-passenger door is closed. The driver or passenger has not fastened their seat belt. ▶ Fasten your seat belt (▷ page 49). The warning lamp goes out. There are objects on the front-passenger seat. ▶ Remove the objects from the front-passenger seat and stow them in a secure place. The warning lamp goes out.
	▷ The red seat belt warning lamp flashes and an intermittent audible warning sounds. The driver or passenger has not fastened their seat belt. At the same time, you are driving at a speed greater than 25 km/h or have briefly driven at a speed greater than 25 km/h. ▶ Fasten your seat belt (▷ page 49). The warning lamp goes out and the intermittent warning tone ceases. There are objects on the front-passenger seat. At the same time, you are driving at a speed greater than 25 km/h or have briefly driven at a speed greater than 25 km/h. ▶ Remove the objects from the front-passenger seat and stow them in a secure place. The warning lamp goes out and the intermittent warning tone ceases.

Safety systems

Warning/ indicator lamp	▷ Signal type Possible causes/consequences and ▶ Solutions
(!)	▷ The yellow brake system warning lamp is lit while the engine is running or the ECO start/stop function is switched on. ⚠ WARNING The brake system is malfunctioning and the braking characteristics may be affected. There is a risk of an accident. ▶ If the multifunction display shows a display message, please observe this. ▶ Drive on carefully. ▶ Consult a qualified specialist workshop immediately.
(!)	▷ The red brake system warning lamp is lit while the engine is running. A warning tone also sounds. ⚠ WARNING The brake boosting effect is malfunctioning and the braking characteristics may be affected. There is a risk of an accident. ▶ Stop the vehicle safely as soon as possible, paying attention to road and traffic conditions. Do not drive on. ▶ Secure the vehicle against rolling away (▷ page 180). ▶ Consult a qualified specialist workshop. ▶ Observe the additional display messages on the multifunction display.
(!)	▷ The red brake system warning lamp is lit while the engine is running. A warning tone also sounds. There is insufficient brake fluid in the brake fluid reservoir. ⚠ WARNING Braking efficiency may be impaired. There is a risk of an accident. ▶ Stop the vehicle safely as soon as possible, paying attention to road and traffic conditions. Do not drive on. ▶ Secure the vehicle against rolling away (▷ page 180). ▶ Do not top up the brake fluid. Topping up will not correct the fault. ▶ Consult a qualified specialist workshop. ▶ Observe the additional display messages on the multifunction display.

Warning/ indicator lamp	▷ Signal type Possible causes/consequences and ▶ Solutions
	▷ The yellow ABS warning lamp is lit while the engine is running. The ABS (Anti-lock Braking System) is malfunctioning. An additional warning tone indicates that EBD (electronic brake force distribution) is malfunctioning. Other driving and driving safety systems may also be malfunctioning. ⚠ **WARNING** The brake system continues to function normally, but without the functions listed above. The front and rear wheels could therefore lock if you brake hard, for example. The steerability and braking characteristics may be severely affected. The braking distance may increase in an emergency braking situation. If ESP® is not operational, ESP® is unable to stabilise the vehicle. There is an increased risk of skidding and/or accident. ▶ Observe the additional display messages on the multifunction display. ▶ Drive on carefully. ▶ Consult a qualified specialist workshop immediately. If the ABS control unit is faulty, there is also a possibility that other systems, such as the navigation system or the automatic transmission, will be unavailable.
	▷ The red brake system warning lamp and the yellow ESP® and ABS warning lamps are lit while the engine is running. ABS and ESP® are malfunctioning. Other driving and driving safety systems may also be malfunctioning. ⚠ **WARNING** The brake system continues to function normally, but without the functions listed above. The front and rear wheels could therefore lock if you brake hard, for example. The steerability and braking characteristics may be severely affected. The braking distance may increase in an emergency braking situation. If ESP® is not operational, ESP® is unable to stabilise the vehicle. There is an increased risk of skidding and/or accident. ▶ Observe the additional display messages on the multifunction display. ▶ Drive on carefully. ▶ Consult a qualified specialist workshop immediately.

Warning/ indicator lamp	▷ Signal type Possible causes/consequences and ▶ Solutions
	▷ The yellow ESP® warning lamp flashes while the vehicle is in motion. ESP® or traction control has intervened due to a risk of skidding or because at least one wheel has started to spin. Cruise control or Distance Pilot DISTRONIC is deactivated. ▶ Depress the accelerator pedal only as far as necessary when pulling away. ▶ Accelerate more gently while the vehicle is in motion. ▶ Adapt your driving style to suit the road and weather conditions. ▶ Do not deactivate ESP®. In rare cases, it may be better to deactivate ESP® in the following situations: • when snow chains are used • in deep snow • on sand or gravel Observe the important safety notes on ESP® (▷ page 76).
	▷ The yellow ESP® warning lamp is lit while the engine is running. ESP® is malfunctioning. Other driving and driving safety systems may also be malfunctioning. ⚠ **WARNING** The brake system continues to function normally, but without the functions listed above. The braking distance may thus increase in an emergency braking situation. If ESP® is not operational, ESP® is unable to stabilise the vehicle. There is an increased risk of skidding and/or accident. ▶ Observe the additional display messages on the multifunction display. ▶ Drive on carefully. ▶ Consult a qualified specialist workshop immediately.

Warning/ indicator lamp	▷ Signal type Possible causes/consequences and ▶ Solutions
	▷ The yellow ESP® OFF warning lamp is lit while the engine is running or the ECO start/stop function is switched on. ESP® is deactivated. **⚠ WARNING** If ESP® is deactivated, ESP® is unable to stabilise the vehicle. Further driving systems or driving safety systems are thus restricted, e.g. Active Blind Spot Assist. The system does not perform braking actions. There is an increased risk of skidding and/or accident. ▶ Reactivate ESP®. In rare cases, it may be better to deactivate ESP® in the following situations: • when snow chains are used • in deep snow • on sand or gravel Observe the important safety notes on ESP® (▷ page 76). ▶ Adapt your driving style to suit the road and weather conditions. If ESP® cannot be activated: ▶ Drive on carefully. ▶ Consult a qualified specialist workshop immediately and have the ESP® system checked.
	▷ Mercedes-AMG vehicles: The yellow SPORT handling mode warning lamp is lit while the engine is running. SPORT handling mode is activated. **⚠ WARNING** When SPORT handling mode is activated, ESP® is unable to stabilise the vehicle. There is an increased risk of skidding and/or accident. ▶ Activate SPORT handling mode only in accordance with the conditions described in the "Activating/deactivating ESP®" section (▷ page 77).

Warning/ indicator lamp	▷ Signal type Possible causes/consequences and ▶ Solutions
	▷ The red indicator lamp for the electric parking brake flashes or is lit and/or the yellow warning lamp for the electric parking brake is lit. ▶ Observe the additional display messages on the multifunction display.
	▷ The red restraint system warning lamp is lit while the engine is running. The restraint system is malfunctioning. ⚠ **WARNING** The airbags or belt tensioners may either be triggered unintentionally or, in the event of an accident, may not be triggered. This poses an increased risk of injury. ▶ Observe the additional display messages on the multifunction display. ▶ Drive on carefully. ▶ Consult a qualified specialist workshop immediately and have the restraint system checked. Further information on the restraint system (▷ page 45).

Engine

Warning/ indicator lamp	▷ Signal type Possible causes/consequences and ▶ Solutions
	▷ The yellow engine diagnostics warning lamp lights up while the engine is running. There may be a fault with the following, for example: • engine management • fuel injection system • exhaust system • • ignition system (for vehicles with petrol engines) • fuel system The emission limit values may be exceeded and the engine may be running in emergency mode. ▶ Consult a qualified specialist workshop immediately. Vehicles with a diesel engine: the fuel tank is completely empty (▷ page 177). ▶ Start the engine three to four times after refuelling. If the yellow engine diagnostics warning lamp goes out, emergency mode is cancelled. The vehicle does not have to be checked.
	▷ The yellow reserve fuel warning lamp lights up while the engine is running. The fuel level has dropped into the reserve range. Operation of the auxiliary heating is deactivated if the fuel level drops into the reserve range. ▶ Refuel at the nearest filling station.
	▷ The red coolant warning lamp lights up while the engine is running and the coolant temperature display is at the start of the scale. The temperature sensor for the coolant temperature display is malfunctioning. The coolant temperature is no longer being monitored. The engine could be damaged if the coolant temperature is too high. ▶ Stop the vehicle immediately, paying attention to road and traffic conditions, and switch off the engine. Do not drive on. ▶ Secure the vehicle against rolling away (▷ page 180). ▶ Consult a qualified specialist workshop.

Warning/ indicator lamp	▷ Signal type Possible causes/consequences and ▶ Solutions
	▷ The red coolant warning lamp lights up while the engine is running. The coolant level is too low. If the coolant level is correct, the airflow to the engine radiator may be blocked or the electric engine radiator fan may be malfunctioning. The coolant is too hot and the engine is not being cooled sufficiently. ▶ Observe the additional display messages on the multifunction display. ▶ Stop the vehicle immediately, paying attention to road and traffic conditions, and switch off the engine. ▶ Secure the vehicle against rolling away (▷ page 180). ▶ Leave the vehicle and keep a safe distance from the vehicle until the engine has cooled down. ▶ Check the coolant level and top up the coolant, making sure to observe the warning notes (▷ page 345). ▶ If you have to top up the coolant frequently, have the engine cooling system checked. ▶ Make sure that the air supply to the engine radiator is not blocked, e.g. by frozen slush. ▶ Do not start the engine again until the coolant temperature is below 120 °C. The engine may otherwise be damaged. ▶ Consult the nearest qualified specialist workshop. ▶ Avoid heavy loads on the engine as you do so, e.g. driving in mountainous terrain and stop-start traffic.
	▷ The red coolant warning lamp lights up while the engine is running. A warning tone also sounds. The coolant temperature has exceeded 120 °C. The airflow to the engine radiator may be blocked or the coolant level may be too low. ⚠ **WARNING** The engine is not being cooled sufficiently and may be damaged. Never drive with an overheated engine. Driving when your engine has overheated can cause any fluids that may have leaked into the engine compartment to catch fire. In addition, steam from an overheated engine can cause serious burns, which can occur just by opening the bonnet. There is a risk of injury. ▶ Observe the additional display messages on the multifunction display. ▶ Stop the vehicle immediately, paying attention to road and traffic conditions, and switch off the engine. ▶ Secure the vehicle against rolling away (▷ page 180). ▶ Leave the vehicle and keep a safe distance from the vehicle until the engine has cooled down. ▶ Check the coolant level and top up the coolant, making sure to observe the warning notes (▷ page 345). ▶ If you have to top up the coolant frequently, have the engine cooling system checked.

Warning/ indicator lamp	▷ Signal type Possible causes/consequences and ▶ Solutions
	▶ Make sure that the air supply to the engine radiator is not blocked, e.g. by frozen slush. ▶ If the coolant temperature is below 120 °C, drive on to the nearest qualified specialist workshop. ▶ Avoid heavy loads on the engine as you do so, e.g. driving in mountainous terrain and stop-start traffic.

Driving systems

Warning/ indicator lamp	▷ Signal type Possible causes/consequences and ▶ Solutions
	▷ The red distance warning lamp lights up while the vehicle is in motion. The distance to the vehicle in front is too small for the speed selected. ▶ Increase the distance.
	▷ The red distance warning lamp lights up while the vehicle is in motion. A warning tone also sounds. You are approaching a vehicle, a pedestrian or a stationary obstacle in your line of travel at too high a speed. ▶ Be prepared to brake immediately. ▶ Pay careful attention to the traffic situation. You may have to brake or take evasive action. Further information on Active Brake Assist with cross-traffic function (▷ page 79). Further information on the distance warning function of Active Brake Assist (▷ page 73).

Tyres

Warning/ indicator lamp	▷ Signal type Possible causes/consequences and ▶ Solutions
	▷ The yellow tyre pressure monitor warning lamp (pressure loss/malfunction) is lit. The tyre pressure monitor has detected a loss of pressure in at least one of the tyres. ⚠ **WARNING** Underinflated tyres pose the following risks: • the tyres may burst, especially as the load and vehicle speed increase • the tyres may wear excessively and/or unevenly, which may greatly impair tyre traction • the driving characteristics, as well as steering and braking, may be greatly impaired There is a risk of an accident. ▶ Stop the vehicle without making any sudden steering or braking manoeuvres. Pay attention to the traffic conditions as you do so. ▶ Secure the vehicle against rolling away (▷ page 180). ▶ Observe the additional display messages on the multifunction display. ▶ Check the tyres and, if necessary, follow the instructions for a flat tyre (▷ page 358). ▶ Check the tyre pressure (▷ page 382). ▶ If necessary, correct the tyre pressure.
	▷ The yellow tyre pressure monitor warning lamp (pressure loss/malfunction) flashes for approximately one minute and then remains lit. The tyre pressure monitor is faulty. ⚠ **WARNING** The system is possibly unable to detect or register low tyre pressure. There is a risk of an accident. ▶ Observe the additional display messages on the multifunction display. ▶ Consult a qualified specialist workshop immediately.

Vehicle	
Warning/ indicator lamp	**▷ Signal type** **Possible causes/consequences and ▶ Solutions**
	▷ The red power steering warning lamp is lit while the engine is running. The power steering assistance is faulty. A warning tone also sounds. ⚠ **WARNING** You will need to use more force to steer. There is a risk of an accident. ▶ Check whether you are able to apply the extra force required. **If you are able to steer safely:** ▶ Drive on carefully. ▶ Consult a qualified specialist workshop immediately. **If you are unable to steer safely:** ▶ Do not drive on. ▶ Consult a qualified specialist workshop.

General notes

The section on the multimedia system in this manual describes the basic principles for operation. More information can be found in the Digital Owner's Manual.

Important safety notes

⚠ WARNING

If you operate information and communication equipment integrated in the vehicle when driving, you could be distracted from the traffic situation. This could also cause you to lose control of the vehicle. There is a risk of an accident.

Only operate this equipment when the traffic situation permits. If you cannot be sure of this, stop the vehicle paying attention to road and traffic conditions and operate the equipment with the vehicle stationary.

You must observe the legal requirements for the country in which you are currently driving when operating the multimedia system.

The multimedia system calculates the route to the destination without taking the following into account, for example:

- traffic lights
- stop and give way signs
- parking or stopping restrictions
- road narrowing
- other road and traffic rules and regulations

The multimedia system may give incorrect driving recommendations if the actual road/traffic situation does not correspond with the digital map data.

For example:

- a diverted route
- the road layout or the direction of a one-way street has been changed

For this reason, you must always observe road and traffic rules and regulations during your journey. Road and traffic rules and regulations always have priority over multimedia system driving recommendations.

⚠ WARNING

Modifications to electronic components, their software as well as wiring could affect their function and/or the operation of other networked components. This could in particular also be the case for systems relevant to safety. They might not function properly anymore and/or jeopardise the operational safety of the vehicle. There is an increased risk of an accident and injury.

Do not attempt to modify the wiring as well as electronic components or their software. Always have work on electrical and electronic components carried out at a qualified specialist workshop.

If you make any changes to the vehicle electronics, the general operating permit is rendered invalid.

Function restrictions

For safety reasons, some functions are restricted or unavailable while the vehicle is in motion. You will notice this, for example, because either you will not be able to select certain menu items or a message will appear to this effect.

Operating system

Overview

General notes

Wearing polarised sunglasses may impair your ability to read the display.

The display has an automatic temperature-controlled switch-off feature. The brightness is automatically reduced if the temperature is too high. If necessary, the display may temporarily switch off completely.

Cleaning instructions

! Do not touch the display. The display has a very sensitive high-gloss surface; there is a risk of scratching. If you have to clean the screen, however, use a mild cleaning agent and a soft, lint-free cloth.

The display must be switched off and have cooled down before you start cleaning. Do not apply pressure to the display surface when cleaning it, as this could cause irreversible damage to the display.

Switching the multimedia system on/off

- ▶ Press the ⏻ button on the centre console to the right of the controller.
- ▶ **For Mercedes-AMG vehicles with a selectable AMG Performance exhaust system:** press the thumbwheel to the right of the controller.

Adjusting the volume

- ▶ Turn the thumbwheel on the right of the controller.

The volume changes:

- for the currently set media source
- during a traffic announcement or navigation message
- in hands-free mode during an active call

Switching the sound on/off

For Mercedes-AMG vehicles with a selectable AMG Performance exhaust system, this function is only available on the multifunction steering wheel.

- ▶ Press the thumbwheel to the right of the controller.

or

- ▶ Press the 🔇 button on the multifunction steering wheel.
  If the audio output is switched off, the status line will show the 🔇 symbol. If you switch the media source or change the volume, the sound is automatically switched on.

ⓘ You will hear navigation messages even when the sound is muted.

Functions

The multimedia system has the following functions:

- Radio mode
- Media mode with media search
- Sound system
- Navigation system
  COMAND Online: navigation using hard drive
  Audio 20: navigation using SD memory card
- Communication functions
- Vehicle functions with system settings
- Favourites functions

Controller

The controller in the centre console lets you:

- select menu items on the display
- enter characters
- select a destination on the map
- save entries

The controller can be:

- turned ⟲◎⟳
- slid left or right ←◎→
- slid forwards or back ↑◎↓
- slid diagonally ↖◎↗
- pressed briefly or pressed and held ◎

Back button

You can use the ↩ button to exit a menu or to call up the display of the current operating mode.

- ▶ **To exit the menu:** briefly press the ↩ button.
  The multimedia system changes to the next higher menu level in the current operating mode.
- ▶ **To call up the highest level menu:** press the ↩ button for longer than two seconds.

Touchpad

Switching the touchpad on/off

Multimedia system:

- ▶ Select `Vehicle` → `System settings` → `Touchpad` → `Activate touchpad`.
  Touchpad is activated ☑ or deactivated ☐.

Operating the touchpad

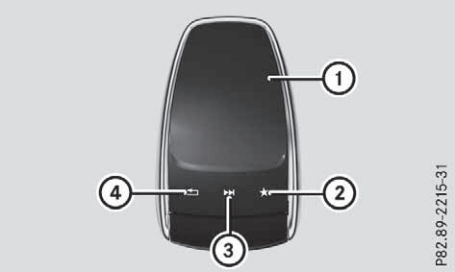

① Touch-sensitive surface
② Favourites button
③ Calls up quick access for audio
④ Back button

You can navigate in menus and lists via touch-sensitive surface ① by using **a single finger swiping gesture**.

- ▶ **To select the menu item:** swipe up, down, to the left or right.
- ▶ Press the touchpad.
- ▶ **To move the digital map:** swipe in all directions.

Use a two-finger swiping gesture, e.g. to use these functions:

- ▶ **To show or hide the audio menu:** swipe up or down with two fingers.
- ▶ **To increase or reduce the vehicle settings and sound settings:** turn two fingers clockwise or anti-clockwise.
- ▶ **To zoom in and out of the map:** move two fingers together or apart.

Character input with handwriting recognition

Entering characters

- ▶ Use one finger to write characters on the surface.
  The character is entered in the input line. If the character that you have entered can be interpreted in different ways, the suggested characters are displayed.
- ▶ If character suggestions are shown, turn and press the controller.
- ▶ Resume character input on the touchpad.

Handwriting recognition

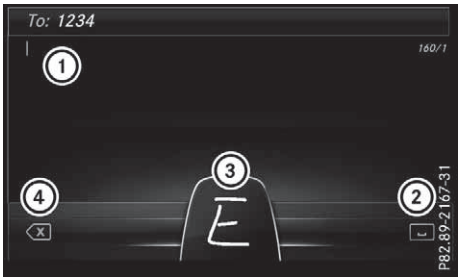

Example: COMAND Online
① Active input line
② To enter a space
③ Character input on the touchpad
④ To delete characters

- ▶ **To display the menu:** press the touchpad.



Example: COMAND Online
① To exit the menu
② To return to handwriting recognition
③ To use the phone book or text templates
④ To select the input line or to change the position of the cursor
⑤ To switch the language
⑥ To finish character entry

- ▶ **To select the input line:** select T/.
- ▶ Swipe up or down.
- ▶ **To move the cursor within the input line:** select T/.
- ▶ Swipe to the left or right.
- ▶ **To delete characters:** swipe to the left if an input line is selected.
- ▶ **To confirm the entry:** press the touchpad.

Switching the handwriting recognition read-aloud function on and off

Multimedia system:

- Select Vehicle → System settings → Touchpad → Read out handwriting recognition.
  The read-aloud function is switched on ☑ or off ☐.

Quick access for audio

Changing the station/music track



Depending on the audio source that is currently activated, you can use this function to select the next station or music track.

- Swipe upwards with two fingers on the touchpad.
  The current audio source is displayed.
- **To select the previous or next station/music track:** swipe to the left or right.
  The selected station/music track is played.

Switching the character entry between touchpad and controller

Requirement: an input line for text, numbers or characters has been selected.

- **To switch to the controller:** press the controller.
  Character entry using the controller is active.
- **To switch to the touchpad:** press the touchpad with your finger.
  Handwriting recognition on the touchpad is active.

Favourites

Calling up and exiting favourites

- **To call up:** press the * button on the controller or on the touchpad.
- Select a favourite, e.g. Vehicle.
  The favourites are displayed.
- **To exit:** press the * button again.

Adding favourites

Adding predefined favourites

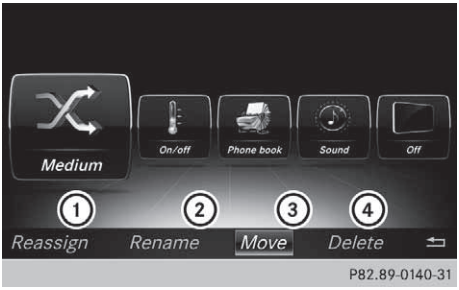

Example: favourites arranged in one row

① To add a new favourite
② To rename a selected favourite
③ To move a selected favourite
④ To delete a selected favourite

- Press the * button.
  The favourites are displayed.
  These are arranged in either one or two rows, each with five tiles.
- **Favourites are arranged in one row:** slide ◎↓ the controller.
  The menu bar is shown.
- Select Reassign.
  The categories are displayed.
- Select a category.
  The favourites are displayed.
- Select a favourite.
- Add a favourite at the desired position.
  If a favourite has already been added at this position, it will be overwritten.
- **Favourites are arranged in two rows:** slide ◎↓ or ↑◎ the controller.
- To select + Add: turn and press the controller.
  The categories and predefined favourites are displayed.

- ▶ Select a category.
  The favourites are displayed.
- ▶ Select a favourite.
- ▶ Add a favourite at the desired position.
  If a favourite has already been added at this position, it will be overwritten.

Adding your own favourites

- ▶ Select Vehicle → Climate control.
- ▶ Press and hold the * button until the favourites are displayed.
- ▶ Add a favourite at the desired position.
  If a favourite has already been added at this position, it will be overwritten.

Climate control settings

General notes

You can adjust the climate control settings using the climate control bar or the climate control menu.

Important climate control functions can be set in the climate control bar:

- Temperature
- Airflow
- Air distribution

The climate control bar is visible in most displays.

You can find all available climate control functions in the climate control menu. You can use the climate control bar to switch to the climate control menu.

Overview

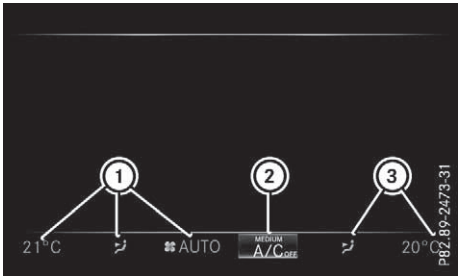

Climate control bar (COMAND Online)

① Adjusts temperature, air distribution on the left and airflow, displays the current settings

② Calls up the climate control menu, displays the current cooling and climate mode settings

③ Adjusts temperature and air distribution on the right, displays the current settings

There may be fewer settings or none, depending on your vehicle's equipment.

Calling up the climate control bar

Multimedia system:

- ▶ Select Vehicle.
  The vehicle menu appears.
- ▶ Slide the controller ◎⬇ repeatedly until the climate control bar is activated.

Calling up the climate control menu

Multimedia system:

- ▶ Select Vehicle.
  The vehicle menu appears.
- ▶ Slide the controller ◎⬇ repeatedly until the climate control bar is activated.
- ▶ To select ② from the climate control bar: turn and press the controller.
  The menu for selecting climate control functions is activated.
- ▶ To select the climate control function: turn and press the controller.
  The selected climate control function appears.

Settings in the climate menu

Setting the climate mode

The climate mode determines the type of airflow. The setting is active when the air-conditioning system is set to AUTO (▷ page 140).

- ▶ Call up the climate control menu (▷ page 311).
- ▶ To select Climate mode: turn and press the controller.
- ▶ To change the setting: turn the controller.
- ▶ **To exit the menu:** press the ⮌ button.

The climate mode bar displays the current airflow setting: DIFFUSE, MEDIUM or FOCUS.

Starting/stopping the perfume atomiser

The perfume atomiser enables the air in the vehicle interior to be scented to individual requirements. For further information, see (▷ page 145).

- ▶ Call up the climate control menu (▷ page 311).
- ▶ To select Air freshener: turn and press the controller.
  The setting element is active.
- ▶ To start/stop the perfume atomiser: press the controller.
- ▶ To set the intensity: turn the controller when the atomiser is switched on.
- ▶ **To exit the menu:** press the ⮌ button.

Switching the ionisation on/off

The ionisation has a cleansing effect on the air in the vehicle interior. For further information, see (▷ page 146).

- ▶ Call up the climate control menu (▷ page 311).
- ▶ To select Ionisation: turn and press the controller.
  The setting element is active.
- ▶ To switch the ionisation on or off: turn the controller.
- ▶ **To exit the menu:** press the ⮌ button.

Activating or deactivating pre-entry climate control via the key

This function is available for hybrid and plug-in hybrid vehicles.

HYBRID: before getting in, the driver's seat area is briefly warmed or ventilated. The air from the vents is pre-cooled.

Plug-in hybrid: before getting in, the driver's seat area or the whole vehicle interior is briefly warmed or ventilated. The air from the vents is pre-cooled.

- ▶ Call up the climate control menu (▷ page 311).
- ▶ **To select** Pre-entry climate control via key**:** turn and press the controller.
- ▶ **To activate or deactivate:** turn the controller.
- ▶ **To exit the menu:** press the ⮌ button.

Activating or deactivating pre-entry climate control at departure time

This function is available for plug-in hybrid vehicles.

The driver's seat and the vehicle interior are heated or cooled prior to the set departure time.

- ▶ Call up the climate control menu (▷ page 311).
- ▶ **To select** Pre-entry climate control at depart. time**:** turn and press the controller.
  A rotary menu appears.
- ▶ **To select the setting:** turn the controller.
- ▶ **To exit the menu:** press the ⮌ button.

Settings in the bottom bar of the climate control menu

Activating/deactivating cooling with air dehumidification

- ▶ Call up the climate control menu (▷ page 311).
- ▶ Slide ◎ the controller repeatedly until the bottom bar is activated.
- ▶ To select ☑ A/C: turn and press the controller.
- ▶ Switch cooling with air dehumidification on ☑ or off ☐.

ⓘ The current status of the cooling function is displayed in the climate control bar: A/C ON – activated, A/C OFF – deactivated.

ⓘ Deactivating the cooling with air dehumidification function reduces fuel consumption.

Synchronising the climate control settings

Use ☑ Sync. (synchronisation) to select the climate control setting for all zones together ☑ or separately ☐.

- ▶ Call up the climate control menu (▷ page 311).
- ▶ Slide ◎⬇ the controller repeatedly until the bottom bar is activated.
- ▶ To select ☑ Sync.: turn and press the controller.
- ▶ Switch the synchronisation function on ☑ or off ☐.

For further information on synchronising climate control settings, see (▷ page 142).

Navigation mode

Important safety notes

⚠ **WARNING**

If you operate information and communication equipment integrated in the vehicle when driving, you could be distracted from the traffic situation. This could also cause you to lose control of the vehicle. There is a risk of an accident.

Only operate this equipment when the traffic situation permits. If you cannot be sure of this, stop the vehicle paying attention to road and traffic conditions and operate the equipment with the vehicle stationary.

You must observe the legal requirements for the country in which you are currently driving when operating the navigation system.

General notes

Correct functioning of the navigation system depends, amongst other things, on GPS reception. In certain situations, GPS reception may be impaired, there may be interference or there may be no reception at all, e.g. in tunnels or multi-storey car parks.

Audio 20 is equipped with Garmin® MAP PILOT (see the manufacturer's operating instructions). The Garmin® MAP PILOT operating instructions are stored on the SD card as a PDF file. The SD card box contains a quick guide.

The following information applies to navigation with COMAND Online. Further information can be found in the Digital Owner's Manual.

Selecting a route type and route options

Multimedia system:

- ▶ Select Navi → Navigation.
- ▶ Select Options → Route settings.

ⓘ If route guidance is active, first slide ◎⬇ the controller and show the menu.

- ▶ Select a route type.

Notes for route types:

- Eco route
  Calculates an economical route.
- Dynamic route (not available in all countries)
  Traffic reports on the route for the route guidance are taken into account.
- Calculate alternative routes
  Different routes are being calculated. Instead of Start, select the Continue menu item.

- ▶ **To avoid/use route options:** select Avoid options.
- ▶ Select a route option.

Notes for route options:

- Use toll roads
  The route calculation includes roads which require you to pay a usage fee (toll).
- Use vignette roads (not available in all countries)
  The route calculation includes roads which require you to pay a time-based fee (vignette). A vignette allows temporary use of the route network, e.g. 10 days or 1 year.

Entering an address

Multimedia system:

- ▶ Select Navi → Navigation.
- ▶ Select Destination → Address entry.

ⓘ If route guidance is active, first slide ◎⬇ the controller and show the menu.

Enter an address, e.g. as follows:

- town or postcode, street, house number
- country, town or postcode

- town or postcode, centre
- street, town or postcode, junction

▶ Select Town.
The town in which the vehicle is currently located (current vehicle position) is at the top. Below this, you will see locations for which route guidance has already been carried out.

▶ Enter the town.
The ◢ symbol: the location is contained on the digital map multiple times.

▶ **To switch to the list:** slide ↑◎ the controller.

▶ Select the location.
If available, the postcode is shown. If there are different postcodes available for the location, the corresponding digits are displayed with an X.

▶ Enter the street and house number.
The address is in the menu.

Further options for destination entry:

- Keyword search
  The keyword search finds destinations using fragments of words.
- select the last destination
- select a contact
- select a POI
  You can search for a POI by location, name or telephone number.
- select destination on the map
- enter intermediate destination
  You can map the route to the destination yourself with up to four intermediate destinations.
- select travel guide destination (only available for selected European countries)
- select destinations from Mercedes-Benz Apps
- select geo-coordinates

Calculating the route

Requirement: the address has been entered and is in the menu.

▶ Select Start or Continue.
The route is calculated with the selected route type and the selected route options.
If route guidance has already been activated, a prompt will appear asking whether you wish to end the current route guidance.

▶ Select Yes or Set as intermediate destination.
Yes cancels the current route guidance and starts route calculation to the new destination.
Set as intermediate destination adds the new destination in addition to the existing destination and opens the intermediate destinations list.

Connecting the mobile phone

Requirements

Note: This segment describes connecting a mobile phone with COMAND Online. To connect a mobile phone with Audio 20 (see the Digital Owner's Manual).

For telephony via the Bluetooth® interface, a Bluetooth®-capable mobile phone is required. The mobile phone must support Hands-Free Profile 1.0 or above.

Multimedia system:

▶ Select Vehicle → System settings → Activate Bluetooth.

▶ Activate Bluetooth® ☑.

Mobile phone:

▶ Activate Bluetooth® and, if necessary, Bluetooth® visibility for other devices (see the manufacturer's operating instructions).

The Bluetooth® device names for all of one manufacturer's products might be identical. To make it possible to clearly identify your mobile phone, change the device name (see the manufacturer's operating instructions).

If the mobile phone supports the PBAP (**P**hone **B**ook **A**ccess **P**rofile) and MAP (**M**essage **A**ccess **P**rofile) Bluetooth® profiles, the following information will be transmitted after you connect:

- Phone book
- Call lists
- Messages

ⓘ Further information on suitable mobile phones can be obtained on the Internet at:

http://www.mercedes-benz.com/connect

Searching for and authorising a mobile phone

Before using your mobile phone with the multimedia system for the first time, you will need to search for the phone and then authorise (connect) it. Depending on the mobile phone, authorisation takes place by means of Secure Simple Pairing or by entering a passkey. The multimedia system automatically makes the procedure that is relevant for your mobile phone available. The mobile phone is always connected automatically after authorisation. Further information on using a mobile phone with the multimedia system (see the Digital Owner's Manual).

If the multimedia system does not detect your mobile phone, this may be due to particular security settings on your mobile phone (see the manufacturer's operating instructions).

Only one mobile phone can be connected to the multimedia system at any one time.

Searching for a mobile phone

Multimedia system:

- Select Telephone → Connect device → Search for phones → Start search.
  The available mobile phones are displayed.

Symbols in the device list

Symbol	Explanation
	New mobile phone found, not yet authorised.
	Mobile phone is authorised, but is not connected.
•	Mobile phone is authorised and connected.

Connecting the mobile phone

Authorisation using Secure Simple Pairing:

- Select the mobile phone.
  A code is displayed in the multimedia system and on the mobile phone.
- **If codes match:** select Yes on the multimedia system.
- Confirm the code on the mobile phone.
  Depending on the mobile phone used, confirm the connection to the multimedia system and for the PBAP and MAP Bluetooth® profiles. The prompt to confirm may take up to two minutes to be displayed (see the manufacturer's operating instructions).
- **If the codes are different:** select No on the multimedia system.
  The process is cancelled.

  Repeat authorisation.

Authorisation by entering a passkey (passcode):

- Select the Bluetooth® name of the mobile phone.
  The input menu for the passkey is displayed.
- Choose a one to sixteen-digit number combination as a passkey.
- Enter the passkey on the multimedia system.
- Press ok to confirm.
- Enter and confirm the passkey on the mobile phone. Depending on the mobile phone used, confirm the connection to the multimedia system and for the PBAP and MAP Bluetooth® profiles. The prompt to confirm may take up to two minutes to be displayed (see the manufacturer's operating instructions).

Mobile phones that are connected to the optionally available telephone module with Bluetooth® (SAP profile) are displayed separately in the device list. These are found below the entry MB SAP module phones.

Switching between mobile phones

If you have authorised more than one mobile phone, you can switch between the individual phones.

Multimedia system:

- Select Telephone → Connect device.
- Select a mobile phone from the device list.

Telephone module with Bluetooth® (SAP profile)

Introduction

Note: this segment describes using the telephone module with COMAND Online. To connect a mobile phone with Audio 20 (see the Digital Owner's Manual).

The module can be used as a permanently installed telephone with its own SIM card (▷ page 317) or in conjunction with a mobile phone (▷ page 317).

If you wish to use the module in conjunction with your mobile telephone, the mobile phone must support the Bluetooth® SAP profile (**S**IM **A**ccess **P**rofile).

The following functions are available using the module:

- data modem mode (▷ page 317)
- sending and receiving text messages (▷ page 318)
- accessing the phone book of the mobile phone (▷ page 318)
- charging a mobile phone via the USB port (▷ page 318)

A list of compatible mobile phones can be found at:

http://www.mercedes-benz.com/connect

ⓘ The module is not available in all vehicles, depending on the equipment.

Installing the module



Mounting the module in the stowage compartment of the centre console

▶ Slide module ② into bracket ① until it audibly engages.

Connecting the module using a USB cable

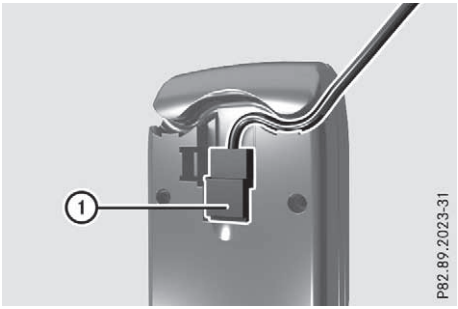

Mounting the module in the stowage compartment of the centre console

▶ Insert USB cable ① into the module.
▶ Slide the module into the bracket until it audibly engages.
▶ Connect the USB cable to the USB port.

Activating and connecting the module

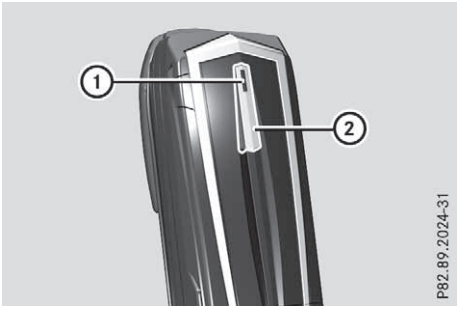

Multimedia system:

▶ Select Telephone.
▶ **Module:** install (▷ page 316).
▶ Press and hold button ②.
▶ As soon as indicator lamp ① starts flashing yellow, release the button.
The indicator lamp continues to flash yellow.

Multimedia system:

▶ Select Connect device → Connect MB SAP module → Start search.
The module is searched for and connected.
▶ **To authorise a mobile phone:** select Start search and follow the instructions of the multimedia system. Further information on

authorising and connecting mobile phones (▷ page 315).

SIM card mode

Inserting a SIM card

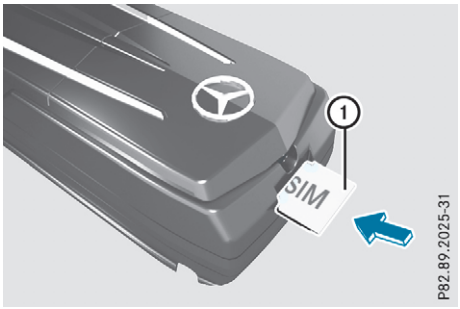

▶ With the contact surface facing down, insert SIM card ① into the SIM card slot until it engages.
After a SIM card is inserted in the module, a Bluetooth® connection with another mobile phone is no longer possible. Any existing Bluetooth® connection is ended upon SIM card insertion.

Connecting the mobile phone to the telephone module

General notes

Before using your mobile phone with the module and the multimedia system for the first time, you will need to search for the phone and then authorise it.

Requirements

The mobile phone can be authorised and connected to the module if the following conditions are met:

- The module is installed (▷ page 316) and activated in the multimedia system (▷ page 316).
- No SIM card is inserted in the module.
- The mobile phone has no active Bluetooth® connection to another device.

Depending on the type of mobile phone, different settings must be changed on the mobile phone (see the manufacturer's operating instructions).

- Bluetooth® must be activated on the mobile phone and must be made visible to other devices
- The Bluetooth® SIM Access Profile of the mobile phone must be activated

Authorising and connecting a mobile phone

Multimedia system:

▶ Select Connect device → Search for phones → SAP phone → Start search → MB SAP module phones.
▶ Select the mobile phone.
▶ Enter and confirm any 16-digit PIN.
▶ Enter and confirm the same PIN on the mobile phone.
▶ Where necessary, enter the SIM card PIN into the multimedia system and confirm.

ⓘ Please observe the messages in the mobile phone. If necessary, you will be asked to confirm further profile requests.

Switching between mobile phones

If you have authorised more than one mobile phone on the module, you can switch between the individual phones.

▶ Select the mobile phone under MB SAP module phones.
▶ Confirm the connection request; see the manufacturer's operating instructions.
▶ Where necessary, enter the SIM card PIN into the multimedia system and confirm.

Data modem mode

▶ Connect the mobile phone to the module (▷ page 317).

or

▶ Insert the SIM card into the SIM card slot on the module (▷ page 317).
▶ Before connecting for the first time, enable the module for Internet access and select the mobile phone network provider in the multimedia system (see the Digital Owner's Manual).
Use as a data modem is automatically activated.
▶ Activate/deactivate data roaming (see the Digital Owner's Manual).

For further information on data modem mode without telephony with COMAND Online (see the Digital Owner's Manual).

Settings

Storing/deleting the SIM card PIN

Multimedia system:

- ▶ Select Connect device → MB SAP module phones.
- ▶ Highlight the mobile phone.
- ▶ To select : navigate to the right.
- ▶ Activate ☑ or deactivate ☐ Store PIN.

For more information on further settings; see the Digital Owner's Manual.

Transferring the phone book

In order to use the phone book of the mobile phone via the multimedia system, the phone book must be transferred using the module.

The transfer of data may take up to ten minutes.

Transmission occurs automatically after a Bluetooth® connection is automatically established.

Text messages

Requirements

The module is connected with the mobile phone (▷ page 317) or is being used in the SIM card mode (▷ page 317).

Activating/deactivating text message downloading from the mobile phone

Dial number	Function
00080	Text message downloading is deactivated.
00081	Text message downloading is activated.

For further information on receiving text messages when using the telephone module (see the Digital Owner's Manual).

Charging a mobile phone

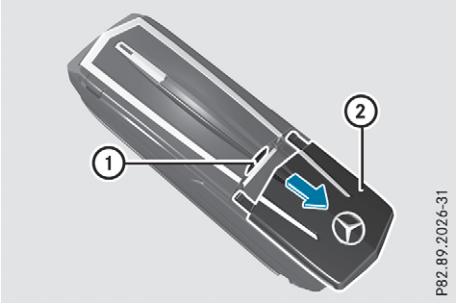

- ▶ Slide cover ② on the module in the direction of the arrow and remove it.
- ▶ Connect the mobile phone via a USB data cable with USB port ①.

Media mode

General notes

If you wish to play external media sources, the appropriate media mode must already be turned on. Further information on media mode; see the Digital Owner's Manual.

The following external media sources can be used:

- Apple® devices (e.g. iPhone®)
- USB devices (e.g. USB stick, MP3 player)
- CD
- DVD (COMAND Online)
- SD cards
- via devices connected by Bluetooth®

ⓘ Information on the single DVD drive (see the Digital Owner's Manual).

Activating media mode

Multimedia system:

- ▶ Select Media → Devices.
  The available media sources will be shown.
- ▶ Select the media source.
  Playable files are played back.

Inserting and removing an SD card

Important safety notes

⚠ WARNING

SD cards are small parts. They can be swallowed and cause choking. This poses an increased risk of injury or even fatal injury.

Keep the SD card out of the reach of children. If a SD card is swallowed, seek medical attention immediately.

! If you are no longer using the SD card, you should remove it and store it outside the vehicle. High temperatures can damage the card.

Inserting an SD card

The SD card slot is located in the stowage compartment under the armrest.

- ▶ Insert the SD card into the SD card slot until the SD card engages. The side with the contacts must face downwards.
- ▶ Select the media source (▷ page 318).

Removing an SD card

- ▶ Press the SD card.
  The SD card is ejected.
- ▶ Remove the memory card.

Connecting USB devices

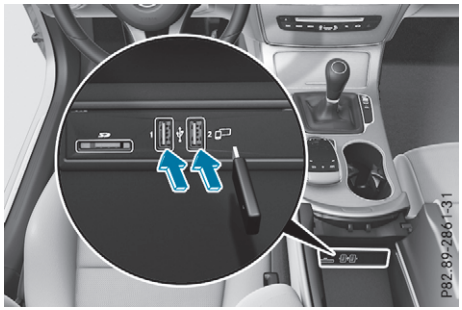

USB ports e.g. when equipped with a navigation system.

There are two USB ports in the stowage space under the armrest.

- ▶ Connect the USB device to the USB port.
- ▶ Select the media source (▷ page 318).

Stowage areas

Loading guidelines

⚠ WARNING

Combustion engines emit poisonous exhaust gases such as carbon monoxide. If the tailgate is open when the engine is running, particularly if the vehicle is moving, exhaust fumes could enter the passenger compartment. There is a risk of poisoning.

Turn off the engine before opening the tailgate. Never drive with the tailgate open.

⚠ WARNING

If objects, luggage or loads are not secured or not secured sufficiently, they could slip, tip over or be flung around and thereby hit vehicle occupants. There is a risk of injury, especially when braking or abruptly changing directions.

Always store objects so that they cannot be flung around. Secure objects, luggage or loads against slipping or tipping before the journey.

⚠ WARNING

The exhaust tail pipe and tail pipe trim can become very hot. If you come into contact with these parts of the vehicle, you could burn yourself. There is a risk of injury.

Always be particularly careful around the exhaust tail pipe and the tail pipe trim. Allow these components to cool down before touching them.

The handling characteristics of a laden vehicle are dependent on the distribution of the load within the vehicle. For this reason, you should note the following when transporting a load:

- never exceed the maximum gross vehicle weight or the permissible axle loads for the vehicle (including occupants).
- the luggage compartment is the preferred place to store objects.
- position heavy loads as far forward as possible and as low down in the load compartment as possible.
- the load must not protrude above the upper edge of the seat backrests.
- always place the load behind unoccupied seats if possible.
- when objects are transported in the luggage compartment, the combined luggage cover and net must always be installed (luggage compartment cover and safety net).
- secure the load with sufficiently strong and wear-resistant lashing material. pad sharp edges for protection.

ⓘ Lashing material is available at any qualified specialist workshop.

Stowage compartments

Important safety notes

⚠ WARNING

If you transport objects in the vehicle interior and these are not adequately secured, they could slip or be flung around and thereby strike vehicle occupants. In addition, cup holders, open stowage spaces and mobile phone brackets may not always be able to hold the objects placed in them in the event of an accident. There is a risk of injury, particularly in the event of sharp braking or sudden changes of direction.

- Always stow objects in such a way that they cannot be tossed about in these or similar situations.
- Always make sure that objects do not project from stowage spaces, luggage nets or stowage nets.
- Ensure that closable stowage spaces are shut before beginning your journey.
- Always stow and secure heavy, hard, pointed, sharp-edged, fragile or outsize objects in the load compartment.

Read the loading guidelines (▷ page 320).

Front stowage compartments

Glove compartment

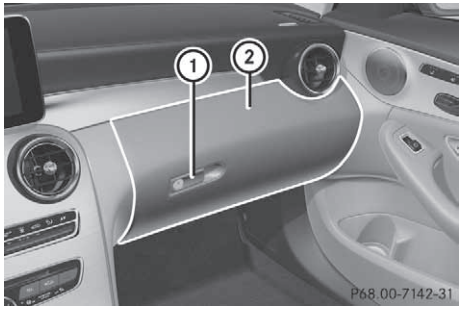

- ▶ **To open:** pull handle ① and open glove compartment flap ②.
- ▶ **To close:** fold glove compartment flap ② upwards until it engages.

Objects in A4 format or an iPad®, for example, can be stored in the glove compartment. In vehicles with a perfume atomiser (▷ page 145), the storage space available in the glove compartment is restricted.

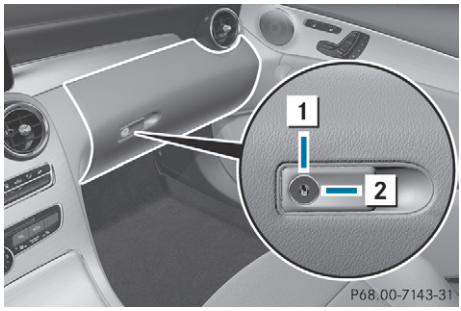

The glove compartment can be locked and unlocked only using the emergency key element (▷ page 87).

- ▶ **To lock:** insert the emergency key element into the lock and turn it 90° clockwise to position 2.
- ▶ **To unlock:** insert the emergency key element into the lock and turn it 90° anti-clockwise to position 1.

Spectacles compartment



- ▶ **To open:** press marking ①.
  The spectacles compartment opens downwards.

Make sure that the spectacles compartment is always closed while the vehicle is in motion.

Stowage compartment in the front centre console

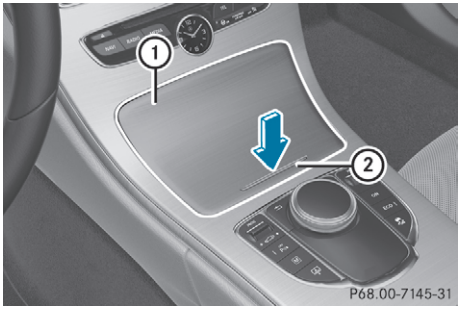

Stowage compartment (example)

- ▶ Briefly press trim element ② in the direction of the arrow.
  Cover ① swings upwards.

Stowage compartment/telephone compartment under the armrest

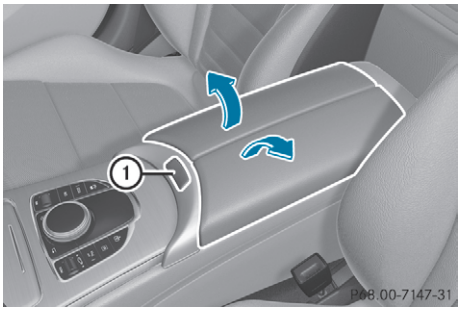

Stowage compartment (example)

▶ **To open:** press button ① at the front. The stowage space opens.

Depending on the vehicle's equipment, the following may be in the stowage space:

- SD card slot
- multimedia connector unit with two USB ports, e.g. for iPod®, iPhone® or MP3 player (see Digital Owner's Manual)
- mobile phone bracket
- small stowage space in the upper front section

Stowage space in the doors

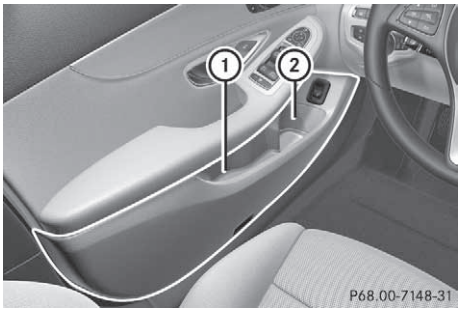

In stowage compartment ① in the doors, you can store items such as a rolled-up fluorescent jacket (driver's door) and the vehicle document wallet (front-passenger door).

In the doors ②, you can store bottles with a capacity of up to 1.0 l.

Rear stowage compartments

Stowage compartment in the rear seat armrest

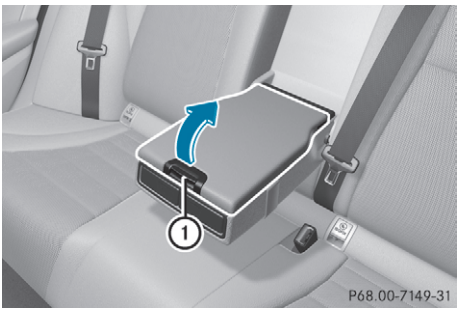

▶ **To open:** fold down the seat armrest.

▶ Press on the front of release catch ① and fold the cover of the armrest upwards.

Additional stowage areas

Depending on the equipment, the following additional stowage areas are available in the vehicle:

- card and coin holder in the dashboard above the light switch (not suitable for holding thin objects such as shopping tokens)
- open stowage compartment on the centre console
- stowage net in the front-passenger footwell
- map pockets on the back of the driver's and front-passenger seat
- luggage nets on the left and right in the luggage compartment

Observe the loading guidelines (▷ page 320) and the safety notes regarding stowage spaces (▷ page 320).

Ski/snowboard bag

Important safety notes

⚠ WARNING

The skibag in conjunction with the lashing straps cannot restrain any objects other than skis.

Vehicle occupants could be struck in the event of sudden braking or an accident, for instance, if you:

- transport other heavy or sharp-edged objects in the skibag
- do not secure the skibag with the lashing straps

There is a risk of accident and injury.

Store only skis in the skibag. Always secure the skibag with the lashing straps so that it cannot move around.

A maximum of four pairs of skis or two snowboards can be transported in the ski/snowboard bag.

Securing the ski/snowboard bag in the luggage compartment

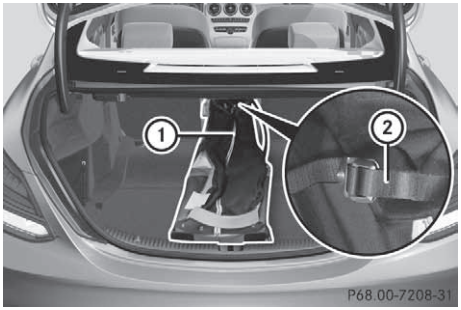

- ▶ Fold the centre rear seat backrest forwards (▷ page 323).
- ▶ Slide the ski/snowboard bag between the two outer rear seat backrests. Ensure that the wheels of the ski/snowboard bag are in the luggage compartment.
- ▶ Open the ski/snowboard bag with zip ① and place the skis or snowboards inside it.
- ▶ Close the ski/snowboard bag.
- ▶ Pull tensioning strap ② tight by the loose end until the skis or snowboards are held firmly inside the ski/snowboard bag.

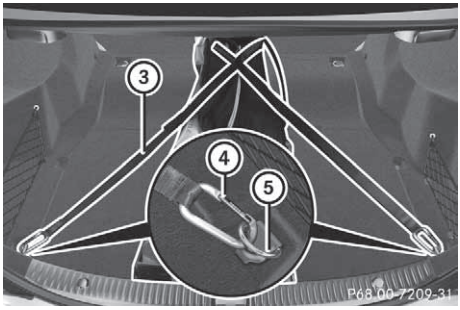

- ▶ Attach tensioning strap ③ in a diagonal pattern to hooks ④ in lashing eyelets ⑤ as shown.

EASY-PACK quickfold rear bench seat

Important safety notes

⚠ WARNING

If the rear bench seat/rear seat and seat backrest are not engaged they could fold forwards, e.g. when braking suddenly or in the event of an accident.

- The vehicle occupant would thereby be pushed into the seat belt by the rear bench seat/rear seat or by the seat backrest. The seat belt cannot protect as intended and could result in additional injury.
- Objects or loads in the boot/luggage compartment cannot be restrained by the seat backrest.

This poses an increased risk of injury.

Before every trip, make sure that the seat backrests and the rear bench seat/rear seat are engaged before every trip.

! When folding the rear seat backrest forwards, ensure that there are no items lying on the seat cushions. These items could otherwise be damaged or could themselves damage the rear seats.

Follow the loading guidelines (▷ page 320).

The outer and the centre rear seat backrests can be folded down separately to increase the luggage compartment capacity. The division ratio is 40/20/40.

Both outer seat backrests in the rear compartment are electrically unlocked with the release handles either in the luggage compartment or beside the seat backrests in the rear compartment (vehicles with EASY-PACK tailgate only). The corresponding rear seat backrests then fold forwards automatically.

Folding the rear seat backrest forwards

Preparation

- ▶ Vehicles without memory function: if necessary, move the driver's or front-passenger seat forwards.
- ▶ Vehicles with memory function: when one or more parts of the rear seat backrest are folded forwards, the respective front seat moves forwards slightly when necessary in order to avoid contact.

  When the engine is running, the driver's seat does not move forwards.
- ▶ Fully insert the rear seat backrest head restraints.

Release handle in the luggage compartment

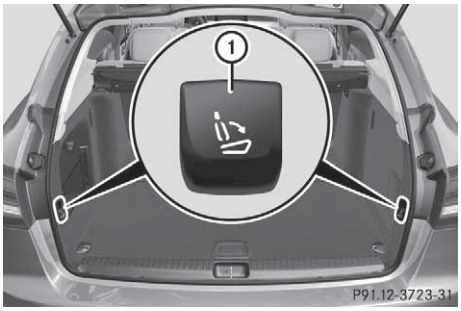

- ▶ Pull the left-hand or right-hand release handle ①.
  The corresponding backrest folds forwards.
- ▶ Move the driver's or front-passenger seat back if necessary.

Release the handle next to the seat backrest

The release handle beside the backrest is present only in vehicles with an EASY-PACK tailgate.

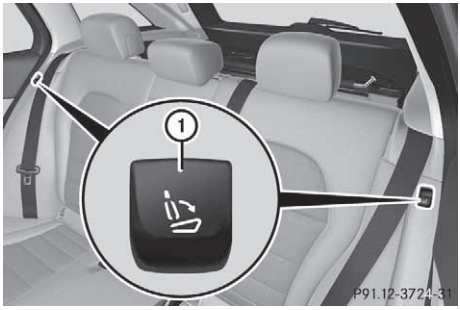

- ▶ Pull the left-hand or right-hand release handle ① beside the backrests.
  The corresponding backrest folds forwards.
- ▶ Move the driver's or front-passenger seat back if necessary.

Centre rear seat backrest

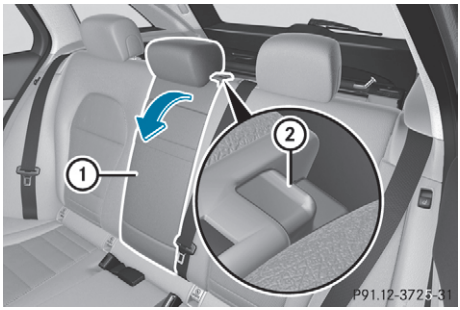

- ▶ Pull release lever ② forwards.
  Rear seat backrest ① is released.
- ▶ Fold rear seat backrest ① forwards.
- ▶ Move the driver's or front-passenger seat back if necessary.

Folding back the rear seat backrest

! Make sure that the seat belt does not become trapped when folding the rear seat backrest back. Otherwise, it could be damaged.

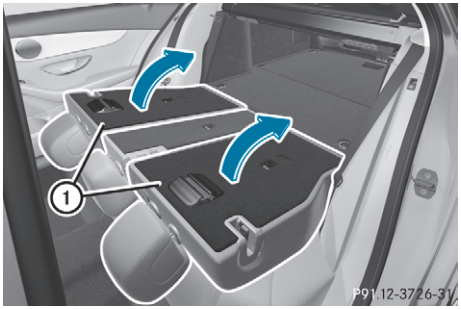

Left- and right-hand seat backrest:

- ▶ Move the driver's or front-passenger seat forward if necessary.
- ▶ Fold rear seat backrest ① back until it engages.
  If the rear seat backrest is not engaged and locked, this will be shown on the multifunction display on the instrument cluster. A warning tone also sounds.
- ▶ Adjust the head restraints if necessary (▷ page 111).
- ▶ Move the driver's or front-passenger seat back if necessary.

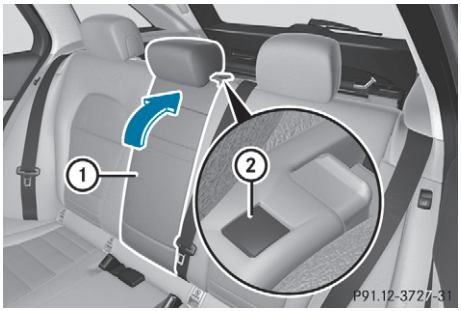

Centre rear seat backrest:

- ▶ Move the driver's or front-passenger seat forward if necessary.
- ▶ Fold seat backrest ① back until it engages. Red lock status indicator ② is no longer visible.
- ▶ Adjust the head restraints if necessary (▷ page 111).
- ▶ Move the driver's or front-passenger seat back if necessary.

Locking the centre rear seat backrest

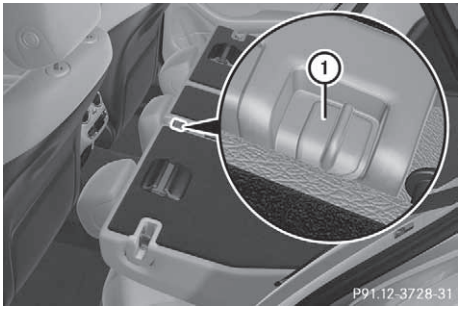

In order to prevent the luggage compartment from being accessed by unauthorised persons, the separate release mechanism for the centre seat backrest can be locked using a catch. The centre seat backrest can then only be folded forwards together with the left seat backrest.

- ▶ **To lock:** fold the left and centre seat backrests forwards. Make sure that the centre and left seat backrests are engaged and joined together.
- ▶ Slide catch ① upwards.
  The release mechanism of the centre seat backrest is locked.
- ▶ **To unlock:** fold the left and centre seat backrests forwards.
- ▶ Slide catch ① downwards.

Securing a load

Lashing eyelets

Observe the following notes on securing loads:

- Observe the loading guidelines (▷ page 320).
- Secure the load using the lashing eyelets.
- Distribute the load on the lashing eyelets evenly.
- Do not use elastic straps or nets to secure a load. These are intended only as anti-slip protection for light loads.
- Do not route lashing materials across sharp edges or corners.
- Pad sharp edges for protection.

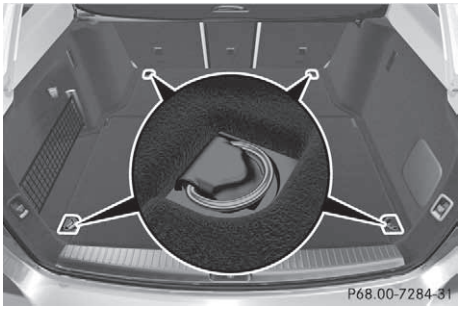

Bag hooks

⚠ WARNING

The bag hooks cannot restrain heavy objects or items of luggage. Objects or items of luggage could be flung around and thereby hit vehicle occupants when braking or abruptly changing directions. There is a risk of injury.

Only hang light objects on the bag hooks. Never hang hard, sharp-edged or fragile objects on the bag hooks.

! The bag hook can bear a maximum load of 3 kg. Do not use it to secure a load.

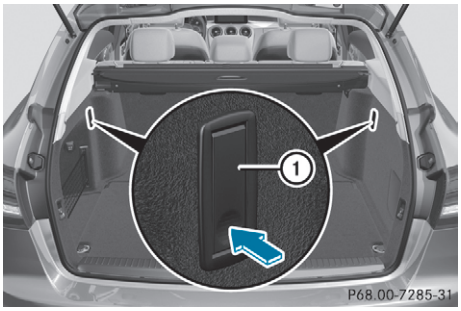

- **To open:** press bag hook ① (arrow). Bag hook ① slides out.
- **To close:** press bag hook ① until it engages.

EASY-PACK luggage compartment cover

Important safety notes

⚠ WARNING

On its own, the luggage compartment cover cannot secure or restrain heavy objects, items of luggage and heavy loads. You could be hit by an unsecured load during sudden changes in direction, braking or in the event of an accident. There is an increased risk of injury or even fatal injury.

Always store objects so that they cannot be flung around. Secure objects, luggage or loads against slipping or tipping over, e.g. by using lashing material, even if you are using the luggage compartment cover.

! When loading the vehicle, make sure that you do not stack the load in the luggage compartment higher than the lower edge of the side windows. Do not place heavy objects on top of the luggage compartment cover.

The luggage compartment cover and the safety net are attached to anchorages on the right and left in the luggage compartment as a combined luggage cover and net.

When the luggage compartment cover is clipped in, no objects should obstruct the downwards movement of the cover in the luggage compartment when the tailgate is closed. In the case of vehicles with an automatic tailgate, the luggage compartment cover will otherwise open automatically.

Extending and retracting the luggage compartment cover

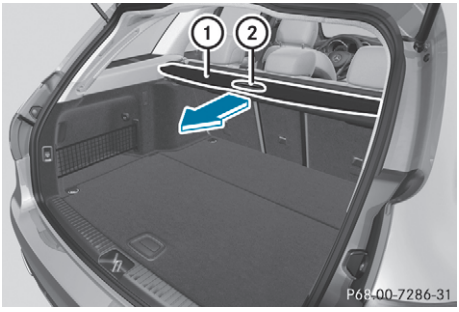

- **To extend:** pull luggage compartment cover ① back by grab handle ② and clip it into the retainers on the left and right.

When the tailgate is open, the extended luggage compartment cover can be raised to make loading easier.

On vehicles with an automatic tailgate, the luggage compartment cover is automatically raised and lowers again when the tailgate is closed.

- Vehicles without an automatic tailgate: press down grab handle ② and manually guide luggage compartment cover ① upwards.
- Before you close the tailgate, pull down luggage compartment cover ① back into its original position until it engages.

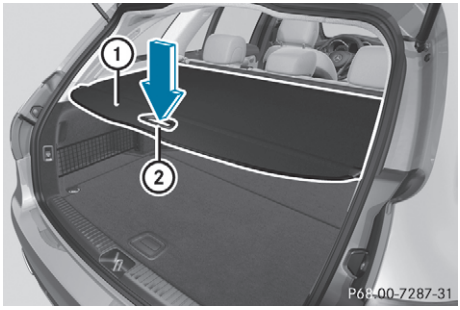

- **To retract:** unhook luggage compartment cover ① from the retainers on the left and right and guide it forwards by grab handle ② until it is fully retracted.

Fitting/removing combined luggage cover and net

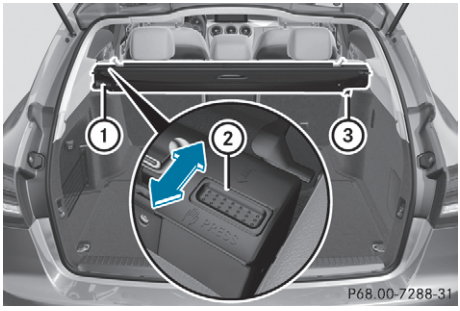

You can reach the combined luggage cover and net to install and remove it from the luggage compartment and, with the seat backrests folded forwards, from the left-hand rear door.

- Make sure that the safety net and the luggage compartment cover are rolled up.
- **To remove:** press button ②.
- Fold the combined luggage cover and net forwards on the left-hand side with the seat backrest folded forwards, and fold it backwards with the seat backrest folded up.
- First, detach the combined luggage cover and net from left-hand catch ① and then remove it from right-hand fixture ③.
- **To install:** push the combined luggage cover and net up to the stop into right-hand fixture ③.
- Place the combined luggage cover and net into the left-hand fixture and push it into catch ① until the combined luggage cover and net engages audibly.



- Make sure that red lock status indicator ④ is no longer visible. The combined luggage cover and net will otherwise not be locked in place.

Attaching the combined luggage cover and net to the rear seat backrest

! If you have attached the combined luggage cover and net to a rear seat backrest that is folded forwards, do not fold the backrest back.

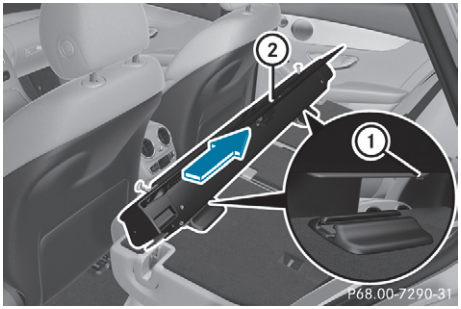

- ▶ Fold the left- and right-hand seat backrest forwards (▷ page 323).
- ▶ Insert combined luggage cover and net ② into two guides ① and push it up to the stop in the direction of the arrow.

To disassemble the combined luggage cover and net, follow the instructions in reverse order.

Safety net

Important safety notes

⚠ WARNING

On its own, the safety net cannot secure or restrain heavy objects, items of luggage and heavy loads. You could be hit by an unsecured load during sudden changes in direction, braking or in the event of an accident. There is an increased risk of injury or even fatal injury.

Always store objects so that they cannot be flung around. Secure objects, luggage or loads against slipping or tipping over, e.g. by using lashing material, even if you are using the safety net.

It is important to use a safety net if you load the vehicle with small objects above the seat backrests. For safety reasons, always use a safety net when transporting a load.

Damaged safety nets can no longer fulfil their protective function and must be replaced. Visit a qualified specialist workshop.

Attaching the safety net

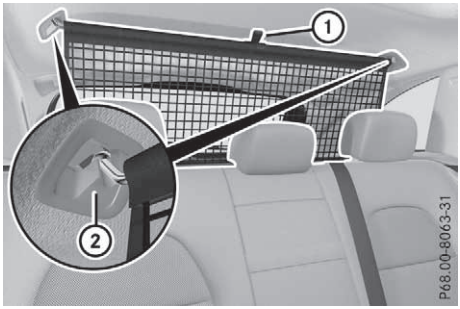

Safety net without luggage compartment enlargement:

- ▶ Pull the safety net out far back from the rear bench seat by tab ①.
- ▶ Pull the safety net back using your arm or hand and secure it against rolling up.
- ▶ First hook the safety net on the left, then on the right into eyelets ②.

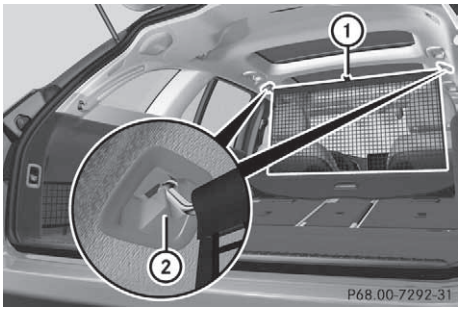

Safety net with luggage compartment enlargement:

- ▶ Make sure that the safety net is fitted to the rear seat backrest (▷ page 327).
- ▶ Quickly guide the safety net up by tab ① and hook it into eyelets ②.

Luggage net

Important safety notes

⚠ WARNING

If you transport objects in the vehicle interior and these are not adequately secured, they could slip or be flung around and thereby strike vehicle occupants. In addition, cup

holders, open stowage spaces and mobile phone brackets may not always be able to hold the objects placed in them in the event of an accident. There is a risk of injury, particularly in the event of sharp braking or sudden changes of direction.

- Always stow objects in such a way that they cannot be tossed about in these or similar situations.
- Always make sure that objects do not project from stowage spaces, luggage nets or stowage nets.
- Ensure that closable stowage spaces are shut before beginning your journey.
- Always stow and secure heavy, hard, pointed, sharp-edged, fragile or outsize objects in the load compartment.

Observe the following notes:

- follow the loading guidelines (▷ page 320).

Attaching the luggage net



▶ Fold up the lashing eyelets next to the rear seat backrest and put them through the slots in the carpet.

▶ Attach the luggage net ① to the front and rear lashing eyelets.

Coat hooks on the tailgate

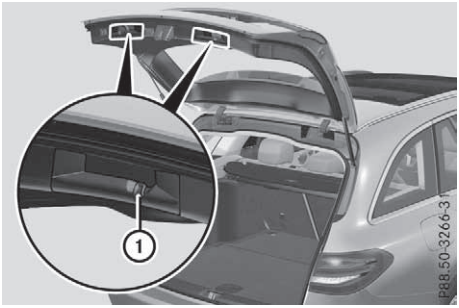

① Coat hook

Snap-in module for luggage compartment (telescopic)

General notes

The luggage compartment plug-in module allows you to use your luggage compartment for a variety of purposes.

The following accessories are located under the luggage compartment floor:

- a telescopic rod
- two mounting elements
- two holders

Important safety notes

⚠ WARNING

If you drive when the luggage compartment floor is open, objects could be flung around, thus striking vehicle occupants. There is a risk of injury, especially when braking or abruptly changing directions.

Always close the luggage compartment floor before a journey.

Fitting

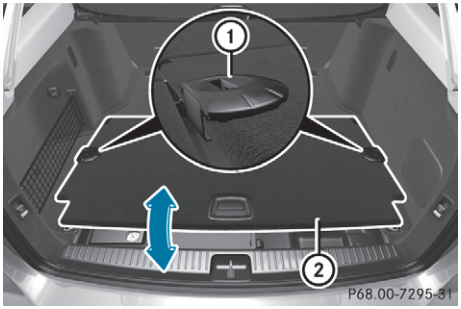

- ▶ Open luggage compartment floor ② (▷ page 330).
- ▶ Attach holder ① in the desired position to the side of luggage compartment floor ②.
- ▶ Close luggage compartment floor ②.

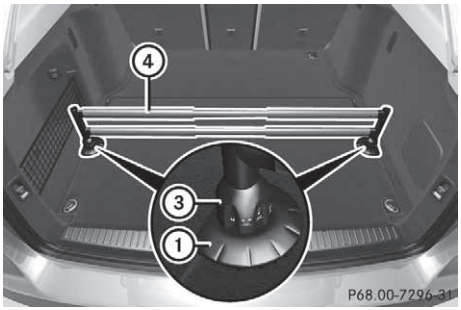

- ▶ Turn mounting elements ③ to [ ].
- ▶ Insert mounting elements ③ into holders ①.
- ▶ Extend the telescopic rod ④ .
- ▶ Insert telescopic rod ④ into mounting elements ③.
- ▶ Turn both mounting elements ③ to [ ] until you feel them engage.

Stowage space under the luggage compartment floor

Important safety notes

⚠ WARNING

If you drive when the luggage compartment floor is open, objects could be flung around, thus striking vehicle occupants. There is a risk of injury, especially when braking or abruptly changing directions.

Always close the luggage compartment floor before a journey.

The following items are located beneath the luggage compartment floor:

- folding box
- tyre-change tool kit
- TIREFIT kit
- EASY-PACK load-securing kit

Opening and closing the luggage compartment floor

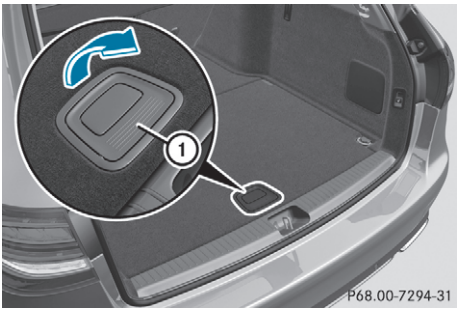

- ▶ **To open:** open the tailgate.
- ▶ Press handle ① on the ribbing downward. Handle ① folds upwards.
- ▶ Swing the luggage compartment floor up using handle ① until it stands vertically.
- ▶ **To close:** fold the luggage compartment floor down.
- ▶ Using handle ①, press the luggage compartment floor down until it engages.

Roof carrier

Important safety notes

⚠ WARNING

When a load is transported on the roof, the vehicle's centre of gravity rises and the handling changes. If you exceed the maximum roof load, the handling as well as steering and braking characteristics are severely affected. There is a risk of an accident.

Always observe the maximum roof load and adapt your driving style.

You will find information on the maximum roof load in the "Technical Data" section (▷ page 402).

! Mercedes-Benz recommends that you only use roof carriers that have been tested and approved for Mercedes-Benz vehicles. This helps to prevent damage to the vehicle.

Position the load on the roof carrier in such a way that the vehicle will not sustain damage even when it is in motion.

Depending on the vehicle equipment, ensure that when the roof carrier is fitted you can:

- raise the sliding sunroof/panorama sliding sunroof fully
- open the tailgate fully

An incorrectly secured roof carrier or roof load may become detached from the vehicle. You must therefore ensure that you observe the roof carrier manufacturer's installation instructions.

Vehicles with panorama sliding sunroof: if a roof carrier is fitted, the panorama sliding sunroof cannot be opened. In order to allow ventilation of the vehicle interior, you can still raise the panorama sliding sunroof. If a roof carrier approved by Mercedes-Benz makes contact with the panorama sliding sunroof, the sunroof will lower slightly but remain raised at the rear.

Attaching the roof carrier

▶ Secure the roof carrier to the roof rails.
▶ Observe the manufacturer's installation instructions.

Features

Cup holders

Important safety notes

⚠ **WARNING**

The cup holder cannot secure a drinks container in place during a journey. If you use a cup holder during a journey, the drinks container could be flung around and liquid could be spilt. Vehicle occupants could come into contact with the liquid and, in particular, be scalded by hot liquid. You could be distracted from the traffic situation and lose control of the vehicle. There is a risk of an accident and injury.

Only use the cup holder when the vehicle is stationary. Only place containers of a suitable size in the cup holder. Seal the container, in particular when it contains hot liquid.

⚠ **WARNING**

If you transport objects in the vehicle interior and these are not adequately secured, they could slip or be flung around and thereby strike vehicle occupants. In addition, cup holders, open stowage spaces and mobile phone brackets may not always be able to hold the objects placed in them in the event of an accident. There is a risk of injury, particularly in the event of sharp braking or sudden changes of direction.

- Always stow objects in such a way that they cannot be tossed about in these or similar situations.
- Always make sure that objects do not project from stowage spaces, luggage nets or stowage nets.
- Ensure that closable stowage spaces are shut before beginning your journey.
- Always stow and secure heavy, hard, pointed, sharp-edged, fragile or outsize objects in the load compartment.

! Only use the cup holders for containers of the right size and which have lids. The drinks could otherwise spill.

! Do not expose drinks bottles in the cup holder in the centre console to continuous, strong and direct sunlight. The passenger compartment in the area of the centre console can otherwise be damaged by the concentrated and reflected sunlight.

Observe the loading guidelines (▷ page 320).

Cup holder on the front centre console

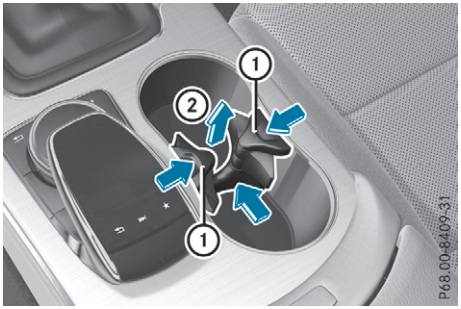

Cup holder (vehicles with manual transmission)

If you remove the cup holder insert, you can use the resultant compartment for stowage.

- **To remove:** carefully pull the upper sections of cup holder ① on the driver's and front-passenger sides until they release.
- Push the cup holder forwards slightly and then push up to remove ②.

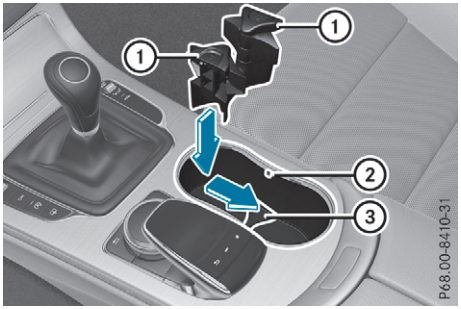

Cup holder (vehicles with manual transmission)

- **To refit:** insert the front of the cup holder and push it back up to the edge ③ on the underside of the stowage space. Insert the cup holder such that the wedge of the upper section of cup holder faces forwards.
- Push the upper sections of the cup holder ① on the driver's and front-passenger sides outward until they engage on the right and left ②.

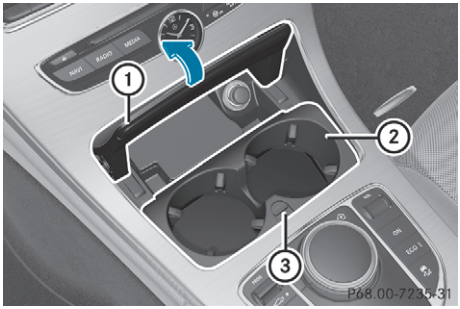

Cup holder (vehicles with automatic transmission)

If you remove the cup holder insert, you can use the resultant compartment for stowage.

- **To open:** open the stowage space (▷ page 321).
- **To remove:** slide catch ③ forwards and pull out cup holder ②.
- **To insert:** insert cup holder ② and slide back catch ③.
- **To close:** push cover ① of the stowage space closed.

You can remove the rubber mat of the cup holder to clean it. Wash it with clean, lukewarm water only.

Cup holder in the rear seat armrest

! Do not sit on or support your body weight on the rear seat armrest when it is folded down, as you could otherwise damage it.

! Close the cup holder before folding the rear seat armrest up. Otherwise, the cup holder could be damaged.

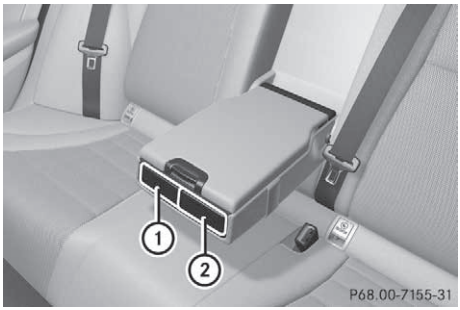

- ▶ Fold down the rear seat armrest.
- ▶ **To open:** press the front of cup holder ① or ②.
  Cup holder ① or ② extends automatically.
- ▶ **To fold out:** place a container in the cup holder.
  Cup holder ① or ② folds down automatically.
- ▶ **To fold in:** remove the container.
  Cup holder ① or ② folds in automatically.
- ▶ **To close:** slide cup holder ① or ② back until it engages.

Sun visors

Overview

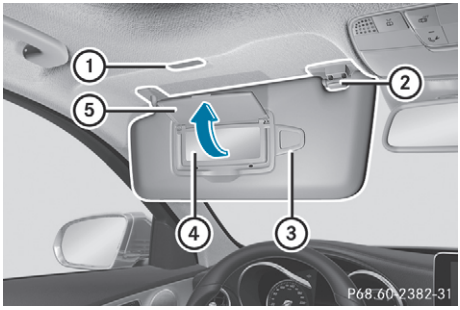

① Mirror light
② Retainer
③ Retaining clip, e.g. for a car park ticket
④ Vanity mirror
⑤ Mirror cover

Vanity mirror in the sun visor

Mirror light ① functions only if the sun visor is clipped into retainer ② and mirror cover ⑤ has been folded up.

Glare from the side

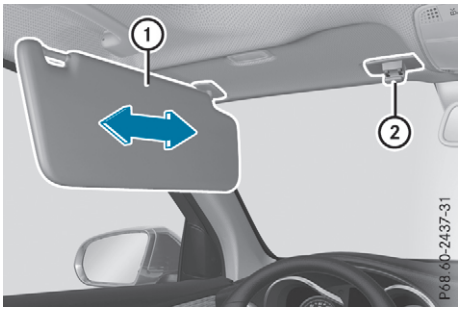

- ▶ Fold down the sun visor.
- ▶ Pull sun visor ① out of retainer ②.
- ▶ Swing sun visor ① to the side.
- ▶ Slide sun visor ① horizontally as required.

Roller sunblinds in the rear side windows

! Always guide the roller sunblind by hand. Do not let it snap back suddenly as this would damage the automatic roller mechanism.

! Do not drive the vehicle with the roller sunblind hooked in and the side windows opened simultaneously. The roller sunblind can jump out of the retainers and spring back suddenly when driving at high speeds, e.g. when driving on the motorway. This could damage the inertia reel. Therefore, either close the side window or retract the roller sunblind before driving at high speeds.

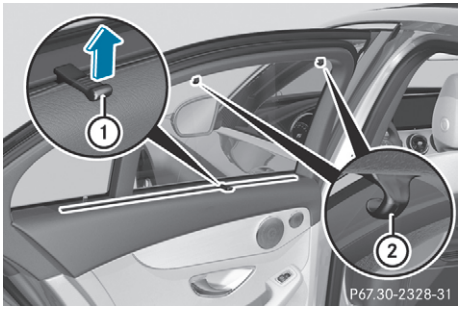

- ▶ **To extend:** pull the roller sunblind out by tab ① and hook it onto retainers ② at the top of the window.

Ashtray

Front ashtray

! The stowage space under the ashtray is not heat resistant. Before placing lit cigarettes in the ashtray, make sure that the ashtray is properly engaged. Otherwise, the stowage space could be damaged.

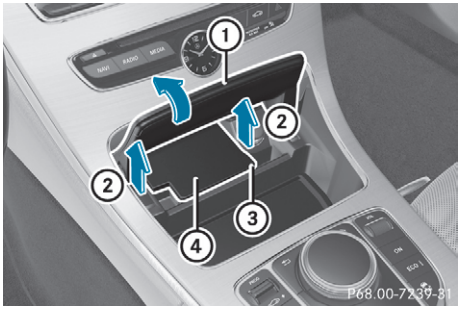

- ▶ **To open:** open the stowage compartment (▷ page 321).
- ▶ Push the cover of the ashtray upwards on its right side ③.
- ▶ **To remove the insert:** hold the sides of insert ④, push it forwards slightly and lift it up ② and out.
- ▶ **To refit the insert:** press insert ④ into the holder until it engages.
- ▶ **To close:** close the cover of the ashtray.
- ▶ Push cover ① of the stowage compartment closed.

ⓘ You can remove the ashtray insert and use the resultant compartment for stowage.

Rear-compartment ashtray

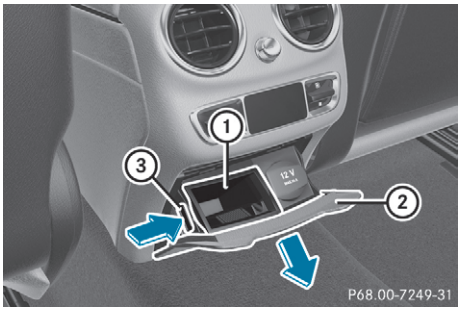

- ▶ **To open:** pull cover ② out by its top handle edge.
- ▶ **To remove the insert:** push ribbing ③ from the left side and pull insert ① up and out.
- ▶ **To fit the insert:** fit insert ① into the holder from above and press down into the holder until it engages.

Cigarette lighter

⚠ **WARNING**

You can burn yourself if you touch the hot heating element or the socket of the cigarette lighter.

In addition, flammable materials can ignite if:

- the hot cigarette lighter falls
- a child holds the hot cigarette lighter to objects, for example

There is a risk of fire and injury.

Always hold the cigarette lighter by the knob. Always make sure that the cigarette lighter is out of reach of children. Never leave children unattended in the vehicle.

Your attention must always be focused on the traffic conditions. Use the cigarette lighter only when road and traffic conditions permit.

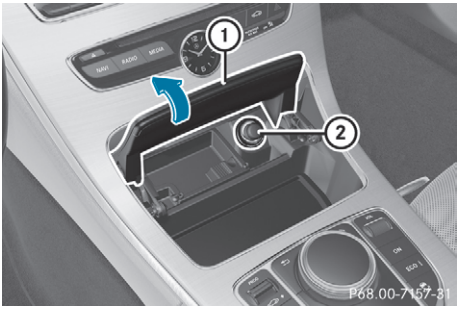

Cigarette lighter (example)

- ▶ Turn the key to position 2 in the ignition lock (▷ page 153).
- ▶ **To open:** open the stowage compartment (▷ page 321).

- ▶ Press in cigarette lighter ②.
  Cigarette lighter ② will pop out automatically when the heating element is red-hot.
- ▶ **To close:** push cover ① of the stowage compartment closed.

12 V sockets

General notes

- ▶ Turn the key to position 1 in the ignition lock (▷ page 153).

The sockets can be used for accessories with a maximum draw of 180 W (15 A). Accessories include such items as mobile phone chargers.

If you use the sockets for long periods when the engine is switched off, the battery may discharge.

An emergency cut-off ensures that the on-board voltage does not drop too low. If the on-board voltage is too low, the power to the sockets is automatically cut. This ensures that there is sufficient power to start the engine.

If you have connected a device to the 12 V power socket, leave the cover of the stowage compartment open. This prevents the cover from being blocked.

Socket on the front centre console

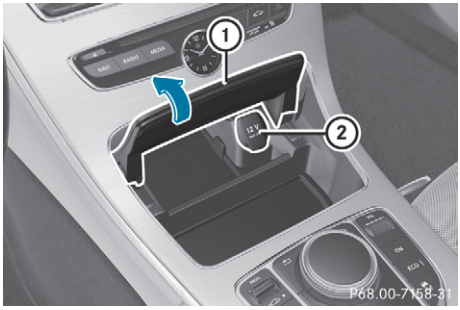

12 V socket (example)

- ▶ **To open:** open the stowage compartment (▷ page 321).
- ▶ Lift up the cover of socket ②.
- ▶ **To close:** push cover ① of the stowage compartment closed.

Socket on the rear-compartment centre console

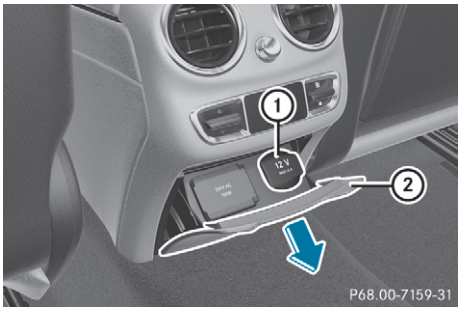

- ▶ Pull cover ② out by its top handle edge.
- ▶ Lift up the cover of socket ①.

Socket in the luggage compartment

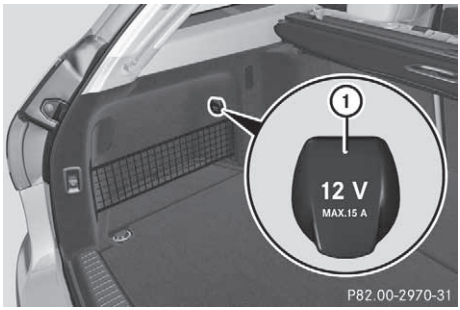

- ▶ Lift up the cover of socket ①.

230 V socket

Important safety notes

⚠ DANGER

When a suitable device is connected, the 230 V power socket will be carrying a high voltage. You could receive an electric shock if the connector cable or the 230 V power socket is pulled out of the trim or is damaged or wet. There is a risk of fatal injury.

- Use only connector cables that are dry and free of damage.
- When the ignition is off, make sure that the 230 V power socket is dry.

▷▷

- Immediately have the 230 V power socket checked or replaced at a qualified specialised workshop if it is damaged or has been pulled out of the trim.
- Never plug the connector cable into a 230 V power socket that is damaged or has been pulled out of the trim.

⚠ DANGER

If you reach into the power socket or plug inappropriate devices into the power socket, you could receive an electric shock. There is a risk of fatal injury.

Only attach appropriate objects to the power socket.

! Note that work and repairs on the 230 V power socket should only be carried out by qualified specialist personnel.

General notes

The 230 V power socket provides an alternating voltage of 230 V so that small electronic devices can be connected. These devices, such as games consoles, chargers and laptops, must not consume more than a maximum of 150 watts altogether.

Do not connect any multiple-socket outlets to the 230 V power socket.

Requirements for operating these devices:

- the electronic device that you connect has a suitable connector and conforms to standards specific to the country you are in
- the electronic device connector is plugged into the 230 V power socket
- the maximum wattage of the device to be connected must not exceed 150 watts
- the on-board voltage is within a permissible voltage range
- the 12 V socket in the front centre console is working properly (▷ page 335)

Using the 230 V power socket

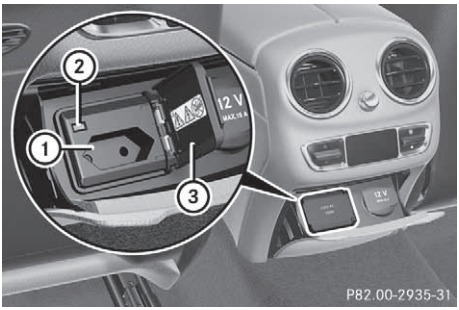

▶ **To switch on:** switch the ignition on.

▶ Open flap ③.

▶ Insert the electronic device connector into 230 V power socket ①.
Indicator lamp ② lights up.

▶ **To switch off:** remove the connector from 230 V power socket ①.

Make sure that you do not pull on the cable.

Problems with the 230 V power socket

Problem	Possible causes/consequences and ▶ Solutions
The warning lamp on the 230 V power socket is not lit.	The on-board voltage is too low because the battery is too weak. ▶ Start the engine. or ▶ Charge the battery (▷ page 364). If the indicator lamp still does not light up: ▶ Consult a qualified specialist workshop.
	The temperature of the DC/AC converter is temporarily too high. ▶ Remove the electronic device connector from the 230 V socket. ▶ Let the DC/AC converter cool down. If the indicator lamp still does not light up after the converter cools down: ▶ Consult a qualified specialist workshop.
	You have connected an electronic device that has a constant nominal power of less than 150 watts, but has a very high switch-on current. This device will not work. If you connect such a device, the 230 V power socket will not supply it with power. ▶ Connect a suitable electronic device.

Mercedes-Benz emergency call system

Information on these requirements can be found in the Digital Owner's Manual.

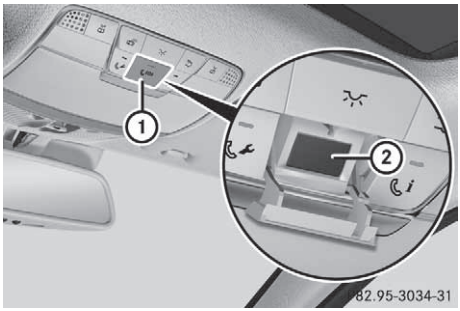

- ▶ **To open:** press cover ①.
- ▶ **To make an emergency call:** press SOS button ② briefly.
  The indicator lamp on SOS button ② flashes until the emergency call is concluded.
- ▶ Wait for a voice connection to the Mercedes-Benz emergency call centre.
- ▶ After the emergency call, close cover ①.

You will see a message if:

- a connection to the Mercedes-Benz emergency call centre cannot be established
- a call has not been automatically forwarded to the public emergency call centre

In this case, dial the **112** emergency number on your mobile phone.

You can find more information on the Mercedes-Benz emergency call system in the Digital Owner's Manual.

Mercedes-Benz Contact/Mercedes me connect

General notes

Vehicles with the Audio 20 multimedia system: Mercedes-Benz Contact/Mercedes me connect offers fast assistance at the touch of a button – around the clock. For any queries about the vehicle, Mercedes-Benz Contact/Mercedes me connect offers a quick and convenient way of connecting a call to the Mercedes-Benz Customer Centre. You can, for example, request an

appointment or call for help in the event of a breakdown.

Vehicles with the COMAND Online multimedia system: Mercedes me connect offers fast assistance at the touch of a button – around the clock. For any queries about the vehicle, Mercedes me connect offers a quick and convenient way of connecting a call to the Mercedes-Benz Customer Centre. You can, for example, request an appointment or call for help in the event of a breakdown.

The multimedia system display indicates that a call is active. During the call, you can change to the navigation menu by pressing the NAVI button on the multimedia system, for example. Voice output is not available in this case.

The Digital Owner's Manual contains further information on:

- **vehicles with the Audio 20 multimedia system:** Mercedes-Benz Contact/Mercedes me connect
- **vehicles with the COMAND Online multimedia system:** Mercedes me connect

Breakdown assistance call button

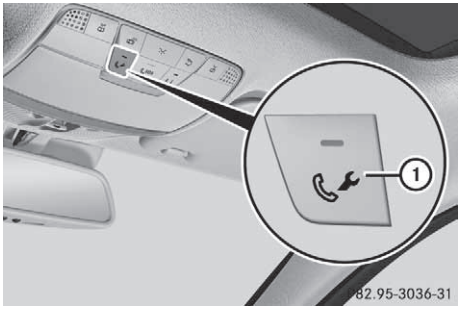

▶ **To call:** press button ① for breakdown assistance.
The call is initiated.
The Connecting call message appears on the multifunction display. The audio system is muted.
For certain countries only: a voice message prompts you to confirm the data transfer. After confirmation, the required vehicle data are transferred. During data transfer, you will see a corresponding symbol on the display. This may take a moment. You are then connected to a person.

▶ **To end a call:** press the button on the multifunction steering wheel.

or

▶ Press the corresponding multimedia system button for ending a telephone call.

Info call button

This function is not available in all countries.



▶ **To call:** press Info call button ①.
The call is initiated.
The Connecting call message appears on the multifunction display. The audio system is muted.
For certain countries only: a voice message prompts you to confirm the data transfer. After confirmation, the required vehicle data are transferred. During data transfer, you will see a corresponding symbol on the display. This may take a moment. You are then connected to a person.

▶ **To end a call:** press the button on the multifunction steering wheel.

or

▶ Press the corresponding multimedia system button for ending a telephone call.

Mobile phone

Important safety notes

⚠ WARNING

If you operate mobile communication equipment while driving, you can be distracted from the traffic situation. This could also cause you

to lose control of the vehicle. There is a risk of an accident.

Only operate this equipment when the vehicle is stationary.

You must observe the legal requirements for the country in which you are currently driving when operating mobile communications equipment in the vehicle.

If it is permitted by law to operate communications equipment while the vehicle is in motion, you may do so only if the traffic situation permits. You may otherwise be distracted from the traffic conditions, cause an accident and injure yourself and others.

Excessive levels of electromagnetic radiation may cause damage to your health and to the health of others. The use of an exterior aerial takes into consideration the scientific discussion surrounding the possible health risk posed by electromagnetic fields.

Mercedes-Benz recommends the use of an approved exterior aerial. This ensures:

- optimal mobile phone reception quality in the vehicle
- that mutual interference between the vehicle electronics and mobile phones is minimised

An exterior aerial has the following advantages:

- it conducts the electromagnetic fields generated by a wireless device to the exterior
- the field strength in the vehicle interior is lower than in a vehicle that does not have an exterior aerial

Information on retrofitting two-way radios and mobile phones (RF transmitters) (▷ page 393).

General notes

Depending on the vehicle equipment, there are various mobile phone brackets that may be fitted in your vehicle; in some cases, these are country-specific.

More information on suitable mobile phones, mobile phone brackets and on connecting Bluetooth®-capable mobile phones with the multimedia system can be obtained:

- at a qualified specialist workshop
- on the internet at http://www.mercedes-benz.com/connect

The functions and services available when you use the phone depend on your mobile phone model and service provider.

Using a mobile phone

To connect a mobile phone to the exterior aerial and charge it, insert it into the mobile phone bracket.

▶ Open the telephone compartment (▷ page 322).
▶ Place the mobile phone bracket into the pre-installed fitting; see the separate installation instructions for the mobile phone fitting.
▶ Insert the mobile phone into the mobile phone bracket; see the separate installation instructions for the mobile phone fitting.

ⓘ The mobile phone can also be operated without being in the bracket. However, the charging function and aerial function are not available.

In order to use Bluetooth® (SAP profile) on your telephone module, you must first insert the telephone module into the pre-installed fitting. This connects it to the exterior aerial. If you wish to charge the mobile phone, you must connect it to a USB port.

Further information on the telephone module with Bluetooth® (SAP profile) can be found in the Digital Owner's Manual.

Operating the mobile phone

You can operate the phone using the [📞] and [📵] buttons on the multifunction steering wheel. You can operate other mobile phone functions via the on-board computer (▷ page 251).

When you remove the key from the ignition lock, the mobile phone is disconnected from the vehicle. You can then no longer make calls using the hands-free system.

If a call is active and you remove the key from the ignition lock, the conversation is transferred over to the mobile phone. It is then possible to continue the conversation on the mobile phone.

Floormats

⚠ WARNING

Objects in the driver's footwell may restrict the clearance around the pedals or block a depressed pedal. This jeopardises the operating and road safety of the vehicle. There is a risk of an accident.

Stow all objects securely in the vehicle so that they do not get into the driver's footwell. Always fit the floormats securely and as prescribed in order to ensure that there is always sufficient room for the pedals. Do not use loose floormats and do not place several floormats on top of one another.

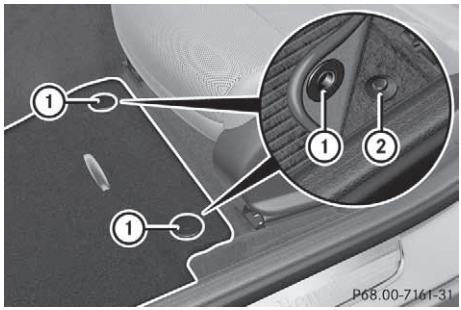

- ▶ Slide the relevant seat back.
- ▶ **To fit:** lay the floormat in the footwell.
- ▶ Press studs ① onto retainers ②.
- ▶ **To remove:** pull the floormat away from retainers ②.
- ▶ Remove the floormat.

Retrofitted anti-glare film

Retrofitted anti-glare film on the inside of the windows can interfere with radio/mobile telephone reception. This is particularly the case for conductive or metallic-coated films. You can obtain information about anti-glare film from a qualified specialist workshop.

Engine compartment

Bonnet

Important safety notes

⚠ WARNING

An unlocked bonnet may open up when the vehicle is in motion and block your view. There is a risk of an accident.

Never unlock the bonnet when driving. Before every trip, ensure that the bonnet is locked.

⚠ WARNING

When being opened and closed, the bonnet may suddenly fall into the closed position. There is a risk of injury to persons in the range of movement of the bonnet.

Open and close the bonnet only when nobody is in the range of movement.

⚠ WARNING

If you open the bonnet while the engine is overheating or while there is a fire in the engine compartment, you could come into contact with hot gases or other leaking service products. There is a danger of injury.

Allow an overheating engine to cool down before opening the bonnet. If there is a fire in the engine compartment, leave the bonnet closed and notify the fire brigade.

⚠ WARNING

There are moving components in the engine compartment. Certain components may continue to move or suddenly move again even after the ignition has been switched off, e.g. the radiator fan. There is a risk of injury.

If you have to carry out work in the engine compartment:

- switch off the ignition
- never touch the dangerous areas surrounding moving components, e.g. the rotation area of the fan
- remove jewellery and watches
- keep items of clothing and hair, for example, away from moving parts.

Hybrid vehicles: be sure to observe the notes in the supplementary instructions. Otherwise, you may fail to recognise dangers.

Active bonnet (pedestrian protection)

Operating principle

! A triggered active bonnet must be repaired at a qualified specialist workshop. The active bonnet function will then be available again. The additional pedestrian protection provided by the active bonnet will then be restored.

The active bonnet is available only for certain countries.

The active bonnet is not available for the Mercedes-AMG C 63 and Mercedes-AMG C 63 S models.

The active bonnet can reduce the risk of injury to pedestrians in certain accident situations. Raising the active bonnet increases the clearance to hard components, such as the engine.

If the active bonnet has been triggered, it is raised at the rear in the area around the hinges by approximately 80 mm. The active bonnet is triggered by pyrotechnics.

For the drive to the workshop, reset the triggered active bonnet yourself. If the active bonnet has been triggered, pedestrian protection may be limited.

Resetting

⚠ WARNING

Certain components in the engine compartment could be very hot, e.g. the engine, the radiator and parts of the exhaust system. There is a risk of injury when accessing the engine compartment.

As far as possible, allow the engine to cool down and only touch the components described in the following.

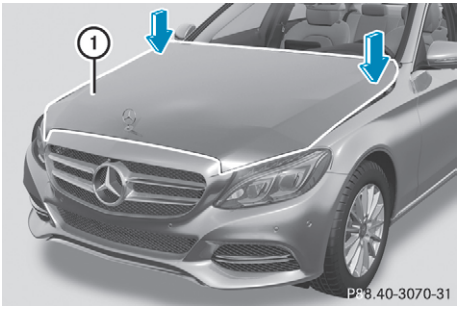

▶ With your hand flat, push down the active bonnet ① in the area around the hinges on both sides (arrows).
Do so until you feel the active bonnet ① engage.

If you can raise the active bonnet slightly at the rear in the area around the hinges, it is not engaged correctly. Repeat the step.

Opening the bonnet

⚠ WARNING

Certain components in the engine compartment could be very hot, e.g. the engine, the radiator and parts of the exhaust system. There is a risk of injury when accessing the engine compartment.

As far as possible, allow the engine to cool down and only touch the components described in the following.

⚠ WARNING

When the bonnet is open, and the windscreen wipers are set in motion, you can be injured by the wiper linkage. There is a risk of injury.

Always switch off the windscreen wipers and the ignition before opening the bonnet.

! Make sure that the windscreen wipers are not folded away from the windscreen. Otherwise, you could damage the windscreen wipers or the bonnet.

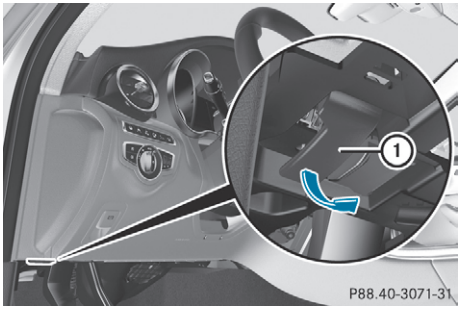

▶ Make sure that the windscreen wipers are switched off.
▶ Pull release lever ① on the bonnet.
The bonnet is released.

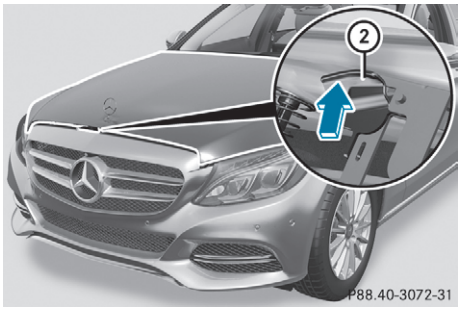

▶ Reach into the gap, pull bonnet catch handle ② up and lift the bonnet.
If you lift the bonnet by approximately 40 cm, the bonnet is opened and held open automatically by the gas-filled struts.

Closing the bonnet

▶ Lower the bonnet and let it fall from a height of approximately 20 cm.
▶ Check that the bonnet has engaged properly. If the bonnet can be raised slightly, it is not properly engaged. Open it again and close it with a little more force.

Radiator

Do not cover up the radiator. Do not use thermal mats, insect protection covers or anything similar. Otherwise, the values of the European on-board diagnostics may be affected. Some of these values are required by law and must always be correct.

Engine oil

Important safety notes

⚠ WARNING

Certain components in the engine compartment could be very hot, e.g. the engine, the radiator and parts of the exhaust system. There is a risk of injury when accessing the engine compartment.

As far as possible, allow the engine to cool down and only touch the components described in the following.

⚠ WARNING

There are moving components in the engine compartment. Certain components may continue to move or suddenly move again even after the ignition has been switched off, e.g. the radiator fan. There is a risk of injury.

If you have to carry out work in the engine compartment:

- switch off the ignition
- never touch the dangerous areas surrounding moving components, e.g. the rotation area of the fan
- remove jewellery and watches
- keep items of clothing and hair, for example, away from moving parts.

⚠ WARNING

If engine oil comes into contact with hot components in the engine compartment, it may ignite. There is a risk of fire and injury.

Make sure that engine oil does not spill out over the filler neck. Allow the engine to cool down and thoroughly clean the components that have come into contact with engine oil before you start the engine.

⚠ WARNING

If you open the bonnet while the engine is overheating or while there is a fire in the engine compartment, you could come into contact with hot gases or other leaking service products. There is a danger of injury.

Allow an overheating engine to cool down before opening the bonnet. If there is a fire in the engine compartment, leave the bonnet closed and notify the fire brigade.

Hybrid vehicles: be sure to observe the notes in the supplementary instructions. Otherwise, you may fail to recognise dangers.

General notes

Depending on your driving style, the vehicle consumes up to 0.8 l of oil per 1000 km. The oil consumption may be higher than this when the vehicle is new or if you frequently drive at high engine speeds.

Depending on the engine, the oil dipstick may be installed at different locations.

To check the oil level:

- park the vehicle on a level surface
- the engine should be switched off for approximately five minutes if the engine is at normal operating temperature
- **All vehicles (except Mercedes-AMG C 63 and Mercedes-AMG C 63 S):** if the engine is not at normal operating temperature, e.g. if the engine was started only briefly, wait approximately 30 minutes before carrying out the measurement

Mercedes-AMG C 63 and Mercedes-AMG C 63 S: The oil level must only be checked when the engine is at normal operating temperature.

Checking the oil level using the oil dipstick

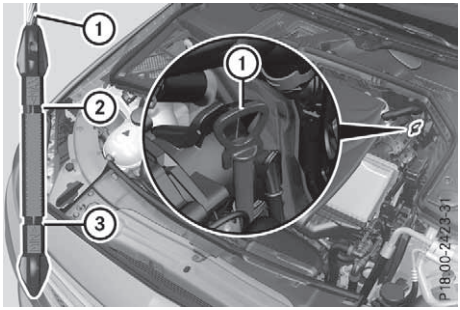

Check the oil level with the oil dipstick (example)

- ▶ Pull oil dipstick ① out of the dipstick tube.
- ▶ Wipe off oil dipstick ①.
- ▶ Slowly slide oil dipstick ① into the guide tube to the stop and take it out again after approximately three seconds.
  If the level is between MIN mark ③ and MAX mark ②, the oil level is correct.
- ▶ If the oil level has dropped to MIN mark ③ or below, top up with 1.0 l of engine oil.

Topping up engine oil

Environmental note

When topping up the oil, take care not to spill any. If oil enters the soil or waterways, it is harmful to the environment.

! Use only engine oils and oil filters that are approved for vehicles with a service system. A list of the engine oils and oil filters that have been tested and approved in accordance with Mercedes-Benz Specifications for Service Products is available at any Mercedes-Benz Service Centre.

The following cause engine failure or damage to the exhaust system:

- Use of engine oils and oil filters that have not been expressly approved for the service system
- Replacement of engine oil and oil filter after the replacement interval specified by the service system has expired
- Use of engine oil additives

! Do not add too much oil. Topping up with too much engine oil can result in damage to the engine or to the catalytic converter. Have excess engine oil siphoned off.

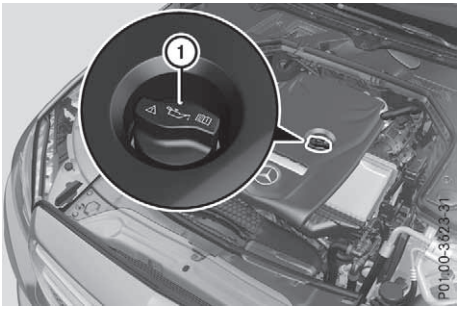

Top up the engine oil (example)

- ▶ Turn cap ① anti-clockwise and remove it.
- ▶ Top up the engine oil.
  If the oil level is at or below the MIN mark on the oil dipstick, top up with 1.0 l of engine oil.
- ▶ Replace cap ① on the filler neck and turn clockwise.
  Make sure that the cap locks securely into place.
- ▶ Check the oil level again with the oil dipstick (▷ page 343).

Further information on engine oil (▷ page 399).

Other service products

Important safety notes

⚠ WARNING

Certain components in the engine compartment could be very hot, e.g. the engine, the radiator and parts of the exhaust system. There is a risk of injury when accessing the engine compartment.

As far as possible, allow the engine to cool down and only touch the components described in the following.

⚠ WARNING

There are moving components in the engine compartment. Certain components may continue to move or suddenly move again even after the ignition has been switched off, e.g. the radiator fan. There is a risk of injury.

If you have to carry out work in the engine compartment:

- switch off the ignition
- never touch the dangerous areas surrounding moving components, e.g. the rotation area of the fan
- remove jewellery and watches
- keep items of clothing and hair, for example, away from moving parts.

⚠ WARNING

The cooling system is pressurised, particularly when the engine is warm. If you open the

cap, you could be scalded if hot coolant sprays out. There is a risk of injury.

Let the engine cool down before you open the cap. Wear gloves and eye protection. Open the cap slowly to release the pressure.

⚠ WARNING

If you open the bonnet while the engine is overheating or while there is a fire in the engine compartment, you could come into contact with hot gases or other leaking service products. There is a danger of injury.

Allow an overheating engine to cool down before opening the bonnet. If there is a fire in the engine compartment, leave the bonnet closed and notify the fire brigade.

Checking the coolant level

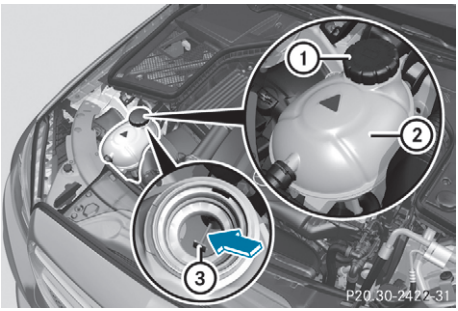

Example: checking the coolant level

- ▶ Park the vehicle on a level surface.
  Check the coolant level only if the vehicle is on a level surface and the engine has cooled down.
- ▶ Turn the key to position 2 in the ignition lock (▷ page 153).

or

- ▶ Press the Start/Stop button twice on vehicles with KEYLESS-GO or the KEYLESS-GO start function (▷ page 154).
- ▶ Check the coolant temperature display on the instrument cluster (▷ page 38).
  The coolant temperature must be below 70 °C.
- ▶ Turn the key to position 0 in the ignition lock (▷ page 153).

or

- ▶ Press the Start/Stop button once on vehicles with KEYLESS-GO or the KEYLESS-GO start function (▷ page 154).
- ▶ Slowly turn cap ① half a turn anti-clockwise and allow excess pressure to escape.
- ▶ Turn cap ① further anti-clockwise and remove it.
  If the coolant is at the level of marker bar ③ in the filler neck when cold, there is enough coolant in the coolant expansion tank ②.
  If the coolant level is approximately 1.5 cm above marker bar ③ in the filler neck when warm, there is enough coolant in the coolant expansion tank ②.
- ▶ If necessary, top up with coolant that has been tested and approved by Mercedes-Benz.
- ▶ Replace cap ① and turn it clockwise as far as it will go.

Further information on coolant (▷ page 401).

Topping up the windscreen washer system

⚠ WARNING

If windscreen washer concentrate comes into contact with hot components of the engine or the exhaust system, it can ignite. There is a risk of fire and injury.

Make sure the windscreen washer concentrate does not come into contact with the filler neck.

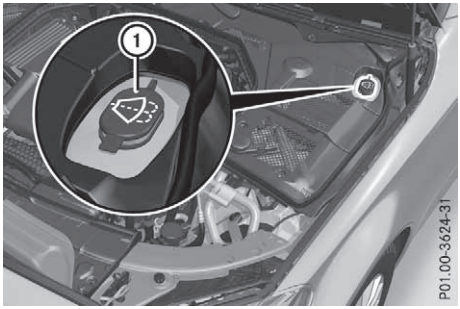

Example: topping up the windscreen washer system

- **To open:** pull cap ① upwards by the tab and open.
- Top up with the premixed washer fluid.
- **To close:** press cap ① onto the filler neck until it engages.

If the washer fluid level drops below the recommended minimum of 1.0 l, a message appears on the multifunction display prompting you to top up the washer fluid (▷ page 294).

Further information on washer fluid (▷ page 401).

ASSYST PLUS

Service message

The ASSYST PLUS service interval display informs you of the next service due date.

Information on the type of service and service intervals (see the separate Service Booklet).

Further information can be obtained at a qualified specialist workshop, e.g. a Mercedes-Benz Service Centre.

ⓘ The ASSYST PLUS service interval display does not show any information on the engine oil level. Observe the notes on the engine oil level (▷ page 343).

The multifunction display shows a service message for a few seconds, e.g.:

- Service A in XX days
- Service A due
- Service A overdue by XX days

Depending on the operating conditions of the vehicle, the remaining time or distance until the next service due date is displayed.

The letter indicates which service is due. A stands for a minor service and B for a major service. A number or another letter may be displayed after the letter.

For certain countries only: the position after the letter A or B indicates any necessary additional maintenance work. If you notify a qualified specialist workshop of this display, you will receive a statement on the associated costs.

The ASSYST PLUS service interval display does not take into account any periods of time during which the battery is disconnected.

Maintaining the time-dependent service schedule:

- Note down the service due date displayed in the multifunction display before disconnecting the battery.

or

- After reconnecting the battery, subtract the battery disconnection periods from the service date shown on the display.

Hiding service messages

- Press the OK or ⮌ button on the steering wheel.

Displaying service messages

- Switch the ignition on.
- Use ⌂ on the steering wheel to call up the list of menus.
- Press ▲ or ▼ on the steering wheel to select the Service menu and confirm with OK.
- Press ▲ or ▼ on the steering wheel to select the ASSYST PLUS submenu and confirm with OK.
  The service due date appears in the multifunction display.

Information about service

Resetting the ASSYST PLUS service interval display

! If the ASSYST PLUS service interval display has been inadvertently reset, this setting can be corrected at a qualified specialist workshop.

Have service work carried out as described in the Service Booklet. This may otherwise lead to increased wear and damage to the major assemblies or the vehicle.

A qualified specialist workshop, e.g. a Mercedes-Benz Service Centre, will reset the ASSYST PLUS service interval display after the service work has been carried out. You can also obtain further information on maintenance work, for example.

Special service requirements

The prescribed service interval is based on normal operation of the vehicle. Service work will need to be performed more often if the vehicle is operated under arduous conditions or increased loads, for example:

- Regular city driving with frequent intermediate stops
- If the vehicle is primarily used to travel short distances
- For frequent use in mountainous terrain or on poor road surfaces
- If the engine is often left idling for long periods

In these or similar operating conditions, have the air filter, engine oil and oil filter, for example, changed more frequently. The tyres must be checked more frequently if the vehicle is operated under increased loads. Further information can be obtained at a qualified specialist workshop, e.g. a Mercedes-Benz Service Centre.

Driving abroad

An extensive Mercedes-Benz Service network is also available in other countries. You can obtain further information from any Mercedes-Benz Service Centre.

Care

General notes

! For cleaning your vehicle, do not use any of the following:

- dry, rough or hard cloths
- abrasive cleaning agents
- solvents
- cleaning agents containing solvents

Do not scrub.

Do not touch the surfaces or protective films with hard objects, e.g. a ring or ice scraper. You could otherwise scratch or damage the surfaces and protective film.

! Do not park up your vehicle for a long period of time immediately after cleaning, particularly after cleaning the wheel rim with wheel cleaner. Wheel cleaner may lead to increased corrosion of the brake discs and pads. You should therefore drive for a few minutes after cleaning. By heating up the brakes, the brake discs and pads dry. The vehicle can then be parked up for a long period of time.

Environmental note

Dispose of empty packaging and cleaning cloths in an environmentally responsible manner.

Regular care of your vehicle is a condition for retaining quality in the long term.

Use care products and cleaning agents recommended and approved by Mercedes-Benz.

Washing the vehicle and cleaning the paintwork

Automatic car wash

⚠ **WARNING**

Braking efficiency is reduced after the vehicle has been washed. There is a risk of an accident.

After washing the vehicle, brake carefully while paying attention to the traffic conditions in order to restore full braking efficiency.

! When Active Brake Assist, Distance Pilot DISTRONIC or the HOLD function is activated, the vehicle brakes automatically in certain situations.

To avoid damage to the vehicle, deactivate these systems in the following or similar situations:

- when towing away
- in a car wash

! Make sure that:

- the side windows and sliding sunroof are closed completely
- the blower is switched off
- the windscreen wiper switch is at position **0**
- the 360° camera or the reversing camera is deactivated

The vehicle could otherwise be damaged.

! If the key is within the rear detection range of KEYLESS-GO, the following situations, for example, could lead to the unintentional opening of the tailgate:

- using a car wash
- using a high-pressure cleaner

Make sure that the key is at least 3 m away from the vehicle.

! Make sure that the automatic transmission is in neutral position N when washing your vehicle in a tow-through car wash. The vehicle may otherwise be damaged.

- Operating with the key:

  Do not remove the key from the ignition lock. Do not open the driver's door when the engine is switched off or at very low speeds. Otherwise, when in transmission position D or R, the automatic transmission will automatically switch to park position P and block the wheels.
- Operating with the Start/Stop button:

  Do not open the driver's door when the engine is switched off or at very low speeds. Otherwise, when in transmission position D or R, the automatic transmission will automatically switch to park position P and block the wheels.

Observe the following to make sure that the automatic transmission stays in neutral position N:

Operating with the key and Start/Stop button:

▶ Make sure that the ignition is switched on.
▶ Make sure that the vehicle is stationary.
▶ Depress the brake pedal and keep it depressed.

Operating with the Start/Stop button only:

▶ Engage park position P.
▶ Release the brake pedal.
▶ Remove the Start/Stop button from the ignition lock (▷ page 154).
▶ Insert the key into the ignition lock.
▶ Switch on the ignition.
▶ Depress the brake pedal and keep it depressed.

Operating with the key and Start/Stop button:

▶ Engage neutral N.
▶ Release the brake pedal.
▶ Release the electric parking brake, if necessary.
▶ Switch off the ignition and leave the key in the ignition lock.

You can wash the vehicle in an automatic car wash from the very start.

If the vehicle is very dirty, wash off excess dirt before cleaning the vehicle in an automatic car wash.

After using an automatic car wash, wipe off the wax from the windscreen and the windscreen wiper blades. This will prevent smears and reduce wiping noises caused by residue on the windscreen.

Washing by hand

In some countries, washing by hand is only allowed at specially equipped washing bays. Observe the legal requirements for each individual country.

▶ Do not use hot water and do not wash the vehicle in direct sunlight.
▶ Use a soft sponge to clean.
▶ Use a mild cleaning agent, such as a car shampoo approved by Mercedes-Benz.
▶ Thoroughly hose down the vehicle with a gentle jet of water.
▶ Do not point the water jet directly towards the air inlet.
▶ Use plenty of water and rinse out the sponge frequently.
▶ Rinse the vehicle with clean water and dry thoroughly with a chamois.
▶ Do not let the cleaning agent dry on the paintwork.

When using the vehicle in winter, remove all traces of road salt deposits carefully and as soon as possible.

High-pressure cleaner

⚠ WARNING

The water jet of circular-jet nozzles (dirt grinders) can cause damage not visible from the outside to tyres or chassis components. Components damaged in this way can unexpectedly fail. There is a risk of an accident.

Do not use high-pressure cleaners with circular-jet nozzles to clean the vehicle. Have dam-

aged tyres or chassis components replaced immediately.

! Always maintain a distance of at least 30 cm between the vehicle and the high-pressure cleaner nozzle. Information about the correct distance is available from the equipment manufacturer.

Move the high-pressure cleaner nozzle around when cleaning your vehicle.

Do not aim directly at any of the following:

- tyres
- door gaps, roof gaps, joints etc.
- electrical components
- battery
- plug connectors
- lamps
- seals
- trim elements
- ventilation slots

Damage to seals or electrical components can lead to leaks or failures.

! Vehicles with decorative film: parts of your vehicle are covered with a decorative film. Maintain a distance of at least 70 cm between the parts of the vehicle covered with the film and the nozzle of the high pressure cleaner.

Information about the correct distance is available from the equipment manufacturer.

Move the high-pressure cleaner nozzle around whilst cleaning.

! If the key is within the rear detection range of KEYLESS-GO, the following situations, for example, could lead to the unintentional opening of the tailgate:

- using a car wash
- using a high-pressure cleaner

Make sure that the key is at least 3 m away from the vehicle.

Cleaning the paintwork

! Do not affix:

- stickers
- films
- magnetic plates or similar items

to painted surfaces. You could otherwise damage the paintwork.

Scratches, corrosive deposits, areas affected by corrosion and damage caused by inadequate care cannot always be completely repaired. In such cases, visit a qualified specialist workshop.

- ▶ Remove impurities immediately, where possible, whilst avoiding rubbing too hard.
- ▶ Soak insect remains with insect remover and rinse off the treated areas afterwards.
- ▶ Soak bird droppings with water and rinse off the treated areas afterwards.
- ▶ Remove coolant, brake fluid, tree resins, oils, fuels and greases by rubbing gently with a cloth soaked in petroleum ether or lighter fluid.
- ▶ Use tar remover to remove tar stains.
- ▶ Use silicone remover to remove wax.

Care and treatment of matt paintwork

! Never polish the vehicle or the light alloy wheels. Polishing makes the paintwork shiny.

! The following may cause the paint to become shiny and thus reduce the matt effect:

- vigorous rubbing with unsuitable materials
- frequent use of car washes
- washing the vehicle in direct sunlight

! Never use paint cleaner, buffing or polishing products, or gloss preserver, e.g. wax, for the purpose of paintwork care. These products are only suitable for high-gloss surfaces. Their use on vehicles with matt paintwork leads to considerable surface damage or, more specifically, to shiny, spotted areas.

Always have paintwork repairs carried out at a qualified specialist workshop.

! Do not use wash programs with a hot wax treatment under any circumstances.

Observe these notes if your vehicle has a clear, matt finish. This will help you to avoid damage to the paintwork due to incorrect treatment.

These notes also apply to light-alloy wheels with a clear matt finish.

The vehicle should preferably be washed by hand using a soft sponge, car shampoo and plenty of water.

Use only insect remover and car shampoo from the range of approved Mercedes-Benz care products.

Cleaning vehicle parts

Cleaning the wheels

⚠ WARNING

The water jet of circular-jet nozzles (dirt grinders) can cause damage not visible from the outside to tyres or chassis components. Components damaged in this way can unexpectedly fail. There is a risk of an accident.

Do not use high-pressure cleaners with circular-jet nozzles to clean the vehicle. Have damaged tyres or chassis components replaced immediately.

! Do not use acidic wheel cleaning products to remove brake dust. This could damage wheel bolts and brake components.

! Do not park up your vehicle for a long period of time immediately after cleaning, particularly after cleaning the wheel rim with wheel cleaner. Wheel cleaner may lead to increased corrosion of the brake discs and pads. You should therefore drive for a few minutes after cleaning. By heating up the brakes, the brake discs and pads dry. The vehicle can then be parked up for a long period of time.

Cleaning the windows

⚠ WARNING

If the windscreen wipers are set in motion when cleaning the windscreen or wiper blades, you could become trapped. There is a danger of injury.

Always switch off the windscreen wipers and the ignition before cleaning the windscreen or wiper blades.

! Do not use dry cloths, abrasive cleaning agents, solvents or solvent-based cleaning agents to clean the inside of the windows/windscreen. Do not touch the inside of the windows/windscreen with hard items such as an ice scraper or a ring. Otherwise, the windows/windscreen could be damaged.

! Clean the water drainage channels of the windscreen and the rear window at regular intervals. Deposits such as leaves, petals and pollen may under certain circumstances prevent water from draining away. This can lead to corrosion damage and damage to electronic components.

▶ Clean the inside and outside of the windows with a damp cloth and a cleaning agent that is recommended and approved by Mercedes-Benz.

Cleaning the wiper blades

⚠ WARNING

If the windscreen wipers are set in motion when cleaning the windscreen or wiper blades, you could become trapped. There is a danger of injury.

Always switch off the windscreen wipers and the ignition before cleaning the windscreen or wiper blades.

! Do not pull on the wiper blade. Otherwise, the wiper blade could be damaged.

! Do not clean wiper blades too often and do not rub them too hard. Otherwise, the graphite coating could be damaged. This could cause wiper noise.

! Hold the wiper arm securely when folding back. The windscreen could be damaged if the wiper arm hits against it suddenly.

▶ Fold the wiper arms away from the windscreen (▷ page 133).

▶ Clean the wiper blades carefully using a damp cloth.

▶ Fold the windscreen wipers back again before switching on the ignition.

Cleaning the exterior lighting

! Only use cleaning agents or cleaning cloths that are suitable for plastic lenses. Unsuitable cleaning agents or cleaning cloths could scratch or damage the plastic lenses of the exterior lighting.

▶ Clean the plastic lenses of the exterior lighting using a wet sponge and a mild cleaning agent, e.g. Mercedes-Benz car shampoo or cleaning cloths.

Cleaning the mirror turn signal

! Only use cleaning agents or cleaning cloths that are suitable for plastic lenses. Unsuitable cleaning agents or cleaning cloths could scratch or damage the plastic lenses of the mirror turn signals.

▶ Clean the plastic lenses of the mirror turn signals in the exterior mirror housing using a wet sponge and mild cleaning agent, e.g. Mercedes-Benz car shampoo or cleaning cloths.

Cleaning AIRPANEL

! If you clean the sensors with a high-pressure cleaner, make sure that you keep a distance of at least 30 cm between the vehicle and the high-pressure cleaner nozzle. Information about the correct distance is available from the equipment manufacturer.

Vehicles with AIRPANEL have shutters in the radiator trim. If the vehicle is very dusty, the adjustment range of the shutters may be restricted. The actuation mechanics of the radiator trim must then be cleaned with a high-pressure cleaner.

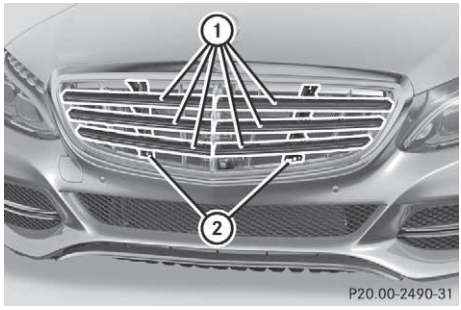

▶ Turn the key to position 2 in the ignition lock (▷ page 153).

or

▶ Press the Start/Stop button twice on vehicles with KEYLESS-GO or the KEYLESS-GO start function (▷ page 154).
Shutters ① open automatically after approximately 120 seconds.

▶ Clean the bearing points of shutters ② in the radiator trim with a high-pressure cleaner.

Cleaning the sensors

! If you clean the sensors with a high-pressure cleaner, make sure that you keep a distance of at least 30 cm between the vehicle and the high-pressure cleaner nozzle. Information about the correct distance is available from the equipment manufacturer.

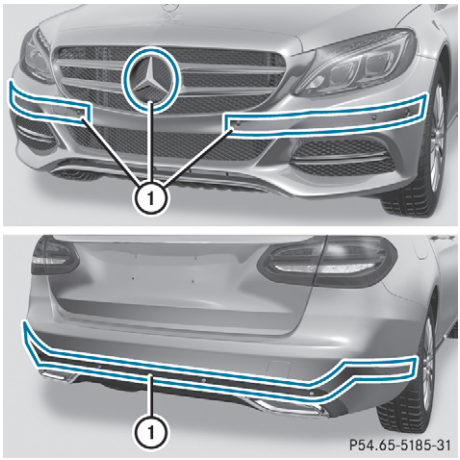

▶ Clean sensors ① of the driving systems with water, car shampoo and a soft cloth.

Cleaning the reversing camera and 360° camera

! Do not clean the camera lens and the area around the reversing camera or 360° camera with a high-pressure cleaner.

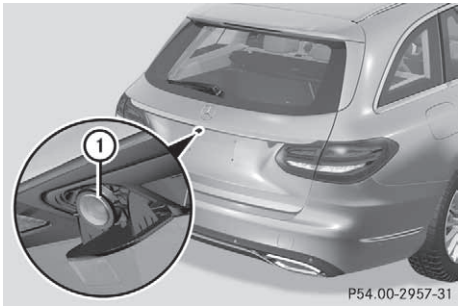

- ▶ Make sure that the vehicle is stationary.
- ▶ Turn the key to position 1 or 2 in the ignition lock (▷ page 153).

or

- ▶ Press the Start/Stop button once or twice on vehicles with KEYLESS-GO or the KEYLESS-GO start function (▷ page 154).
- ▶ Open the camera cover for cleaning, via the multimedia system; see Digital Owner's Manual.
- ▶ **To clean the camera:** use clean water and a soft cloth to clean the camera lens ①.

When you switch off the ignition, the camera cover closes automatically.

Cleaning the reversing camera

! Do not clean the camera lens and the area around the reversing camera or 360° camera with a high-pressure cleaner.

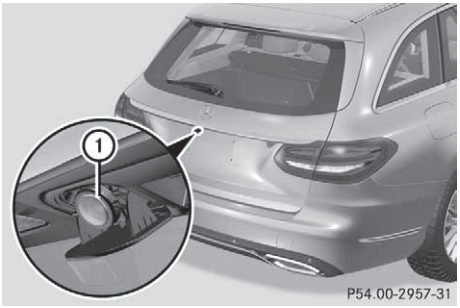

- ▶ Make sure that the vehicle is stationary.
- ▶ Turn the key to position 1 or 2 in the ignition lock (▷ page 153).

or

- ▶ Press the Start/Stop button once or twice on vehicles with KEYLESS-GO or the KEYLESS-GO start function (▷ page 154).
- ▶ Open the camera cover for cleaning, via the multimedia system; see Digital Owner's Manual.
- ▶ **To clean the camera:** use clean water and a soft cloth to clean the camera lens ①.

When you switch off the ignition, the camera cover closes automatically.

Cleaning the exhaust tail pipes

⚠ WARNING

The exhaust tail pipe and tail pipe trim can become very hot. If you come into contact with these parts of the vehicle, you could burn yourself. There is a risk of injury.

Always be particularly careful around the exhaust tail pipe and the tail pipe trim. Allow these components to cool down before touching them.

! Do not clean the exhaust pipe with acid-based cleaning agents, such as sanitary cleanser or wheel cleaner.

! Mercedes-AMG C 63 and Mercedes-AMG C 63 S with black exhaust pipes: Black chrome trims must not be polished with a chrome polish as this will cause them to lose their black shine. To ensure optimum care, the trims should be rubbed down with a lightly oiled cloth after each time the car is washed. Commercially available engine and maintenance oils are suitable for use as oil.

In the event of heavier soiling, you may apply a fine lacquer polish with a microfibre cloth. Remove any excess polish paste after polishing.

Impurities combined with the effects of road grit and corrosive environmental factors may cause flash rust to form on the surface. You can restore the original shine of the exhaust pipe by cleaning it regularly, especially in winter and after washing the vehicle.

- ▶ Clean the exhaust pipe with a care product tested and approved by Mercedes-Benz.

Cleaning the trailer tow hitch

Environmental note

Dispose of oily and greasy cloths in an environmentally-responsible manner.

! Do not clean the ball coupling with a high-pressure cleaner. Do not use solvents.

The ball coupling must be cleaned if it becomes dirty or corroded.

- ▶ Remove rust on the ball, e.g. with a wire brush.
- ▶ Remove dirt with a clean, lint-free cloth or a brush.
- ▶ After cleaning, lightly oil or grease the ball coupling.
- ▶ Check that the vehicle's trailer tow hitch is working properly.

You can also have the maintenance work on the ball coupling and the trailer tow hitch carried out by a qualified specialist workshop.

Interior care

Cleaning the display

! For cleaning, do not use any of the following:

- alcohol-based thinner or petrol
- abrasive cleaning agents
- commercially-available household cleaning agents

These may damage the display surface. Do not put pressure on the display surface when cleaning. This could lead to irreparable damage to the display.

- ▶ Before cleaning the display, make sure that it is switched off and has cooled down.
- ▶ Clean the display surface using a commercially available microfibre cloth and TFT/LCD display cleaner.
- ▶ Dry the display surface using a dry microfibre cloth.

Cleaning the plastic trim

⚠ **WARNING**

Care products and cleaning agents containing solvents can cause surfaces in the cockpit to become porous. This could result in plastic parts breaking away when the airbags are deployed. There is a danger of injury.

Do not use care products and cleaning agents containing solvents to clean the cockpit.

! Never attach the following to plastic surfaces:

- stickers
- films
- perfume oil container or similar

You could otherwise damage the plastic.

! Do not allow cosmetics, insect repellent or sunscreen to come in contact with the plastic trim. This maintains the high-quality look of the surfaces.

- ▶ Wipe the plastic trim with a damp, lint-free cloth, e.g. a microfibre cloth.
- ▶ **Heavy soiling:** use care and cleaning products recommended and approved by Mercedes-Benz.
  The surface may change colour temporarily. Wait until the surface is dry again.

Cleaning the steering wheel and gear lever or selector lever

- ▶ Thoroughly wipe with a damp cloth or use leather care agents that have been recommended and approved by Mercedes-Benz.

Cleaning wood trim and trim elements

! Do not use solvent-based cleaning agents such as tar remover, wheel cleaners, polishes or waxes. There is otherwise a risk of damaging the surface.

- ▶ Wipe the wood trim and trim elements with a damp, lint-free cloth, e.g. a microfibre cloth.
- ▶ **Trim elements with piano black finish:** wipe with a soft, damp cotton cloth. Use clean water.
- ▶ **Heavy soiling:** use care and cleaning products recommended and approved by Mercedes-Benz.

Cleaning the seat covers

General notes

! Do not use a microfibre cloth to clean covers made out of real leather, artificial leather or DINAMICA. If used frequently, this can damage the cover.

Note that regular care is essential to make sure that the appearance and comfort of the covers are retained over time.

Genuine leather seat covers

! To retain the natural appearance of the leather, observe the following cleaning instructions:

- Clean genuine leather covers carefully with a damp cloth and then wipe the covers down with a dry cloth.
- Make sure that the leather does not become soaked. It may otherwise become rough and cracked.
- Only use leather care agents that have been tested and approved by Mercedes-Benz. You can obtain these from a qualified specialist workshop.

Leather is a natural product.

It has natural surface properties, e.g.:

- unevenness in structure
- marks caused by growth and injury
- subtle colour differences

These are characteristics of leather and not material faults.

Seat covers from other materials

! Observe the following when cleaning:

- clean artificial leather covers with a cloth moistened with a solution containing 1% detergent (e.g. washing-up liquid).
- clean cloth covers with a microfibre cloth moistened with a solution containing 1% detergent (e.g. washing-up liquid). Rub carefully, and always wipe entire seat sections to avoid leaving visible lines. Leave the seat to dry afterwards. Cleaning results depend on the type of dirt and how long it has been there.
- Clean DINAMICA covers with a damp cloth. Make sure that you wipe entire seat sections to avoid leaving visible lines.

Cleaning the seat belts

⚠ **WARNING**

Seat belts may be severely weakened if bleached or coloured. This may lead to the seat belts, for example, tearing or failing in an accident. There is an increased risk of injury, possibly even fatal.

Never bleach or colour seat belts.

! Do not clean the seat belts using chemical cleaning agents. Do not dry the seat belts at temperatures above 80 °C or in direct sunlight.

▶ Use clean, lukewarm water and soap solution.

Cleaning the roof lining and carpets

▶ **Roof lining:** if it is very dirty, use a soft brush or dry shampoo.

▶ **Carpets:** use the carpet and textile cleaning agents recommended and approved by Mercedes-Benz.

Where will I find...?

Reflective safety jacket

Removing and stowing the reflective safety jacket

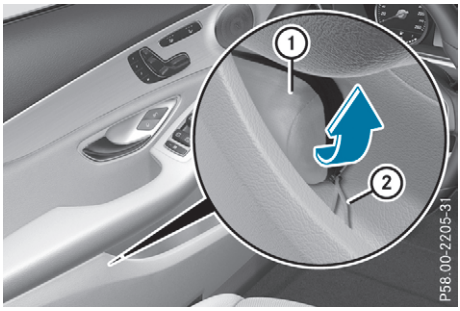

The reflective safety jackets are located in the safety jacket compartments in the stowage compartments of the front doors. There are also safety jacket compartments in the stowage compartments of the rear doors, in which reflective safety jackets can be stowed.

- ▶ **To remove:** pull out safety jacket bag ① with the reflective safety jacket by loop ②.
- ▶ Open safety jacket bag ① and pull out the reflective safety jacket.
- ▶ **To stow:** fold the reflective safety jacket, roll it up and stow it in safety jacket bag ①.
- ▶ Slide safety jacket bag ① along the lower edge of the armrest into the safety jacket compartment. Meanwhile, ensure that loop ② hangs out well within reach.
- ▶ Observe the legal requirements on using reflective safety jackets in each individual country.

ⓘ Remove a new reflective safety jacket from its packaging material before sliding it into the safety jacket compartment. The packaging material may otherwise cause it to slip out or make removing it difficult.

Notes on reflective safety jackets

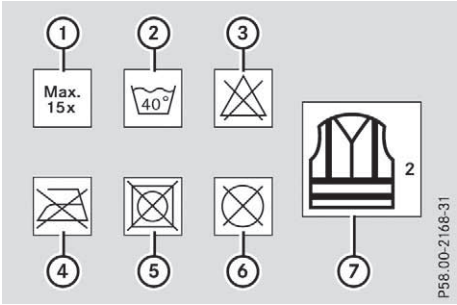

① Maximum number of washes
② Maximum wash temperature
③ Do not bleach
④ Do not iron
⑤ Do not use a tumble dryer
⑥ Do not dry-clean
⑦ This is a class 2 jacket

- The reflective safety jackets meet the requirements defined by the legal standard only:
  - if the correct size is used
  - if the reflective safety jackets are correctly fastened
- Before use, ensure that the reflective safety jackets are clean and intact. The special properties may otherwise be compromised.
- The reflective safety jackets should be stored in their original packaging in a dry place away from sources of heat and light.
- The maximum number of washes specified is not the only factor influencing the life span of the reflective safety jackets. Their life span also depends on use, care, storage etc.
- The reflective safety jackets should be disposed of and replaced with new ones:
  - after 15 washes, and/or
  - if the reflective strips have become scratched, and/or
  - if the backing material and/or reflective strips have become soiled with dirt that cannot be cleaned off, and/or
  - the fluorescence has faded e.g. due to the effects of sunlight
- Dispose of reflective safety jackets in an environmentally responsible manner. To do so, contact your local waste disposal company.

Warning triangle

Removing the warning triangle

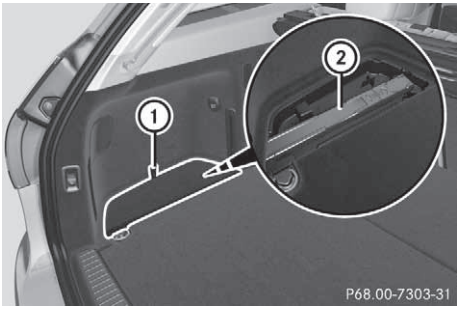

- ▶ Open the tailgate.
- ▶ Unhook and fold up the stowage net below.
- ▶ Open cover ① of the stowage compartment.
- ▶ Remove warning triangle ②.

Setting up the warning triangle

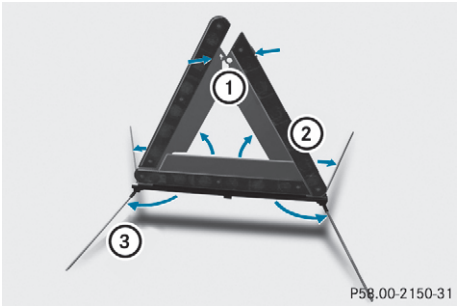

- ▶ Fold legs ③ out to the side.
- ▶ Fold side reflectors ② upwards to form a triangle and lock them at the top using press stud ①.

First-aid kit

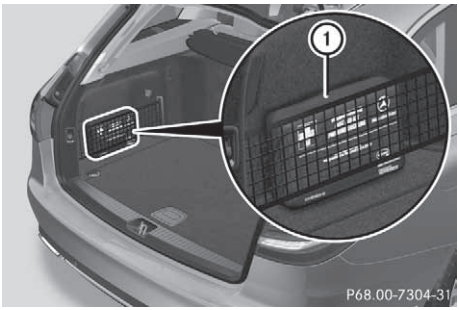

The first-aid kit ① is in the luggage compartment in the left-hand stowage net.

- ▶ Open the tailgate.
- ▶ Remove the first-aid kit ①.

Check the expiry date on the first-aid kit at least once a year. Replace the contents if necessary, and replace any missing items.

Fire extinguisher

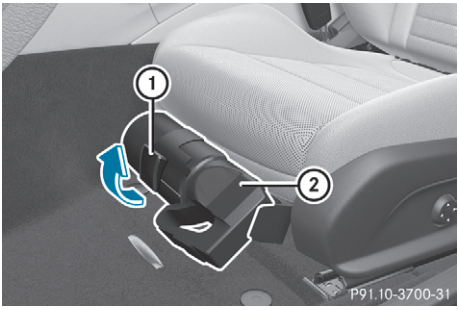

The fire extinguisher is located underneath the front of the driver's seat.

- ▶ Pull tab ① upwards.
- ▶ Remove fire extinguisher ②.

Have the fire extinguisher refilled after each use and checked every one or two years. It may otherwise fail in an emergency.

Observe the legal requirements for each individual country.

Towing eye

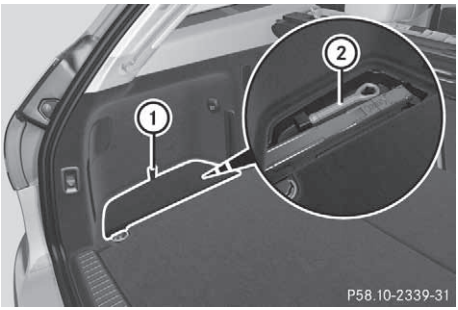

The towing eye is in the left stowage compartment.

▶ **To remove:** open the tailgate.

▶ Open cover ① of the left-hand stowage compartment.

▶ Remove towing eye ②.

Vehicles with a TIREFIT kit

General notes

ⓘ Depending on the power category (LK), the tyre inflation compressor weighs as follows:

- LK1 – 12 V/10 A, 120 W: 0.8 kg
- LK2 – 12 V/15 A, 180 W: 0.9 kg

You can find information on the power category and/or electrical details on the back of the tyre inflation compressor.

The tyre inflation compressor is maintenance-free. If it develops a fault, please contact a qualified specialist workshop.

Removing the TIREFIT kit

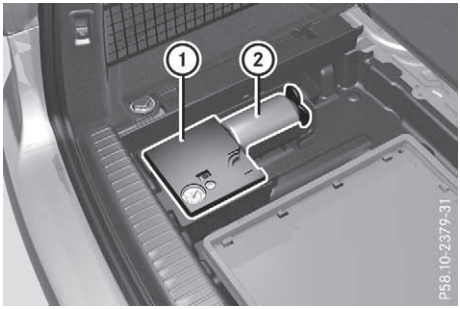

① Tyre inflation compressor
② Tyre sealant bottle

The TIREFIT kit is located in the stowage space under the luggage compartment floor.

▶ **To remove:** open the tailgate.

▶ Swing the luggage compartment floor upwards (▷ page 330).

▶ Use the TIREFIT kit (▷ page 359).

Vehicles with a tyre-change tool kit

General notes

Apart from some country-specific variants, vehicles are not equipped with a tyre-change tool kit.

Some tools for changing a wheel are specific to the vehicle. For more information on which tyre-changing tools are required and approved for performing a tyre change on your vehicle, consult a qualified specialist workshop.

Necessary tyre-changing tools may include, for example:

- jack
- wheel chock
- wheel wrench
- centring pin

ⓘ The jack weighs approximately 2.1 kg.

The maximum load-bearing capacity of the jack can be found on the adhesive label on the jack.

The jack is maintenance-free. If it develops a fault, please contact a qualified specialist workshop.

Removing the tyre-change tool kit

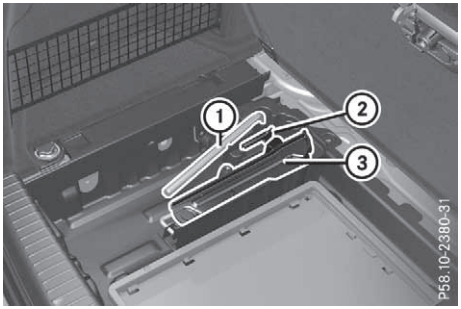

Example

① Wheel wrench
② Folding wheel chock
③ Jack

The tyre-change tool kit is in a tray in the stowage well under the luggage compartment floor.

On vehicles with aluminium hub caps, the tyre-change tool kit also contains a socket. Depending on the vehicle equipment, this is located in the left stowage net or under the luggage compartment floor.

▶ **To remove:** open the tailgate.

▶ Swing the luggage compartment floor upwards (▷ page 330).

Flat tyre

Preparing the vehicle

Your vehicle may be equipped with:

- MOExtended tyres (tyres with run-flat characteristics) (▷ page 358)

  Vehicle preparation is not necessary on vehicles with MOExtended tyres.
- a TIREFIT kit (▷ page 357)
- an emergency spare wheel (certain countries only) (▷ page 390)

Vehicles with MOExtended tyres are not equipped with a TIREFIT kit at the factory. It is therefore recommended that you additionally equip your vehicle with a TIREFIT kit if you fit tyres that do not feature run-flat characteristics, e.g. winter tyres. A TIREFIT kit can be obtained from a qualified specialist workshop.

Vehicles with a Mercedes-Benz emergency call system that are not equipped with a TIREFIT kit: in the event of a flat tyre, contact the Customer Assistance Centre for the Mercedes-Benz emergency call system (▷ page 337).

Information on changing and fitting a wheel (▷ page 385).

▶ Stop the vehicle as far away as possible from traffic on solid, non-slippery and level ground.

▶ Switch on the hazard warning lamps.

▶ Secure the vehicle against rolling away (▷ page 180).

▶ If possible, bring the front wheels into the straight-ahead position.

▶ Switch off the engine.

▶ Remove the key from the ignition lock.

or, on vehicles with KEYLESS-GO start function or KEYLESS-GO:

▶ Open the driver's door.
The vehicle electronics are now in position 0. This is the same as the key having been removed.

▶ Remove the Start/Stop button from the ignition lock (▷ page 154).

▶ Make sure that the passengers are not endangered as they get out of the vehicle. Make sure that no one is near the danger area while a wheel is being changed. Anyone who is not directly assisting in the wheel change should, for example, stand behind the barrier.

▶ Get out of the vehicle. Pay attention to traffic conditions when doing so.

▶ Close the driver's door.

▶ Place the warning triangle a suitable distance away (▷ page 356). Observe legal requirements.

Vehicles with MOExtended tyres (tyres with run-flat characteristics)

General notes

With MOExtended tyres (tyres with run-flat characteristics), you can continue to drive your vehicle even if there is a total loss of pressure in one or more tyres. The affected tyre must not show any clearly visible damage.

You can recognise MOExtended tyres by the "MOExtended" mark that appears on the tyre sidewall. You will find this mark next to the tyre size designation, the load-bearing capacity and the speed index.

MOExtended tyres may be used only in conjunction with an activated tyre pressure loss warning system or tyre pressure monitor.

If a pressure loss warning message appears on the multifunction display:

- observe the instructions in the display messages (▷ page 287)
- check the tyre for damage
- if driving on, observe the following notes

The driving distance possible in run-flat mode is approximately 80 km when the vehicle is partially laden and approximately 30 km when the vehicle is fully laden.

In addition to the vehicle load, the driving distance possible in run-flat mode depends on the:

- vehicle speed
- road condition
- outside temperature

The driving distance possible in run-flat mode may be reduced by extreme driving conditions/manoeuvres, or it can be increased through a moderate style of driving.

The driving distance possible in run-flat mode is counted from the moment the tyre pressure loss warning appears on the multifunction display.

You must not exceed a maximum permissible speed of 80 km/h.

When replacing one or all tyres, observe the following specifications for your vehicle's tyres:

- size
- type
- the "MOExtended" mark

If a tyre has gone flat and cannot be replaced with an MOExtended tyre, a standard tyre may be used as a temporary measure. Make sure that you use the proper size and type (summer or winter tyre).

Vehicles with MOExtended tyres are not equipped with a TIREFIT kit at the factory. It is therefore recommended that you additionally equip your vehicle with a TIREFIT kit if you fit tyres that do not feature run-flat characteristics, e.g. winter tyres. A TIREFIT kit can be obtained from a qualified specialist workshop.

Important safety notes

⚠ WARNING

When driving in emergency mode, the driving characteristics deteriorate, e.g. when cornering, accelerating quickly and when braking. There is a risk of accident.

Do not exceed the stated maximum speed. Avoid abrupt steering and driving manoeuvres, and driving over obstacles (kerbs, potholes, off-road). This applies in particular to a laden vehicle.

Stop driving in emergency mode if:

- you hear banging noises.
- the vehicle starts to shake.
- you see smoke and smell rubber.
- ESP® is intervening constantly.
- there are tears in the sidewalls of the tyre.

After driving in emergency mode, have the wheel rims checked at a qualified specialist workshop with regard to their further use. The faulty tyre must be replaced.

TIREFIT kit

Important safety notes

TIREFIT is a tyre sealant.

You can use TIREFIT to seal punctures of up to 4 mm, particularly those in the tyre tread. You can use TIREFIT at outside temperatures down to -20 °C.

⚠ WARNING

In the following situations, the tyre sealant is unable to provide sufficient breakdown assistance, as it is unable to seal the tyre properly:

- there are cuts or punctures in the tyre larger than those mentioned above.
- the wheel rim is damaged.
- you have driven at very low tyre pressures or on a flat tyre.

There is a risk of an accident.

Do not drive any further. Contact a qualified specialist workshop.

⚠ WARNING

The tyre sealant is harmful and causes irritation. It must not come into contact with your skin, eyes or clothing or be swallowed. Do not

inhale TIREFIT fumes. Keep tyre sealant away from children. There is a risk of injury.

If you come into contact with the tyre sealant, observe the following:

- Rinse off the tyre sealant from your skin immediately with water.
- If the tyre sealant comes into contact with your eyes, immediately rinse them thoroughly with clean water.
- If tyre sealant is swallowed, immediately rinse your mouth out thoroughly and drink plenty of water. Do not induce vomiting, and seek medical attention immediately.
- Immediately change out of clothing which has come into contact with tyre sealant.
- If an allergic reaction occurs, seek medical attention immediately.

! After use, excess tyre sealant may run out of the filler hose. This could cause stains.

Therefore, place the filler hose in the plastic bag which contained the TIREFIT kit.

Environmental note

Have the used tyre sealant bottle disposed of professionally, e.g. at a qualified specialist workshop.

! Do not operate the tyre inflation compressor for longer than ten minutes at a time without a break. It may otherwise overheat.

The tyre inflation compressor can be operated again once it has cooled down.

Comply with the manufacturer's safety instructions on the sticker on the tyre inflation compressor.

Using the TIREFIT kit

- ▶ Do not remove any foreign objects that have penetrated the tyre, e.g. screws or nails.
- ▶ Remove the tyre sealant bottle, the accompanying TIREFIT sticker and the tyre inflation compressor from the stowage space underneath the luggage compartment floor (▷ page 357).

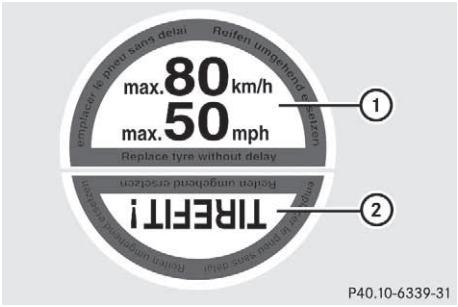

- ▶ Affix part ① of the TIREFIT sticker to the instrument cluster within the driver's field of vision.
- ▶ Affix part ② of the TIREFIT sticker near the valve on the wheel with the defective tyre.

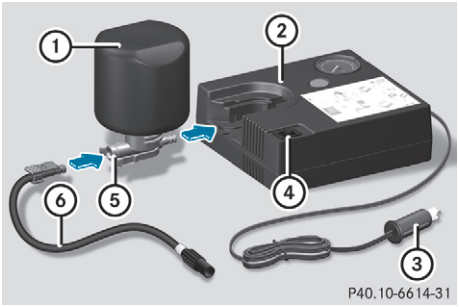

- ▶ Remove filler hose ⑥ and connector ③ from bottom section of tyre inflation compressor housing ②.
- ▶ Slide yellow filler hose connector into mounting on yellow cap ⑤ of tyre sealant bottle ① until connector engages.
- ▶ With the sealing rings in front, slide yellow cap ⑤ of tyre sealant bottle ① into the holder of tyre inflation compressor ②. The cap must engage in both hooks.

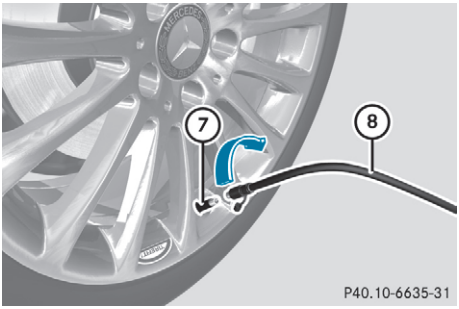

- ▶ Remove cap from valve ⑦ on faulty tyre.
- ▶ Screw filler hose ⑧ onto valve ⑦.
- ▶ Insert connector ③ into cigarette lighter socket (▷ page 334) or into another 12 V socket in your vehicle (▷ page 335).
- ▶ Turn the key to position 1 in the ignition lock (▷ page 153).
- ▶ Press on/off switch ④ on tyre inflation compressor to **ON** position.
  The tyre inflation compressor is switched on. The tyre is inflated.
  First, tyre sealant is pumped into the tyre. The pressure may briefly rise to approximately 500 kPa (5 bar/73 psi).
  Do not switch off the tyre inflation compressor during this phase.
- ▶ Let the tyre inflation compressor run for a maximum of ten minutes. The tyre should then have reached a pressure of at least 200 kPa (2.0 bar/29 psi).

If a pressure of 200 kPa (2.0 bar/29 psi) has been attained after ten minutes, see "Tyre pressure reached" (▷ page 361).

If a tyre pressure of 200 kPa (2.0 bar/29 psi) has not been attained after ten minutes, see "Tyre pressure not reached" (▷ page 361).

If tyre sealant leaks out, make sure you clean the affected area as quickly as possible. It is preferable to use clear water.

If you get tyre sealant on your clothing, have it cleaned as soon as possible with perchloroethylene.

Tyre pressure not reached

If a tyre pressure of 200 kPa (2.0 bar/29 psi) has not been reached after ten minutes:

- ▶ Switch off the tyre inflation compressor.
- ▶ Unscrew the filler hose from the valve of the faulty tyre.
  Tyre sealant may leak out when the filler hose is unscrewed.
- ▶ Very slowly drive forwards or reverse approximately 10 m.
- ▶ Pump up the tyre again.
  After a maximum of ten minutes, the tyre pressure must be at least 200 kPa (2.0 bar/29 psi).

⚠ WARNING

If the required tyre pressure is not reached after the specified time, the tyre is too badly damaged. The tyre sealant cannot repair the tyre in this instance. Damaged tyres and a tyre pressure that is too low can significantly impair the vehicle's braking and driving characteristics. There is a risk of accident.

Do not continue driving. Contact a qualified specialist workshop.

Countries with Mercedes-Benz Service24h: you will find a sticker with the telephone number on the B-pillar on the driver's side, for example.

Tyre pressure reached

⚠ WARNING

A tyre temporarily sealed with tyre sealant impairs the driving characteristics and is not suitable for higher speeds. There is a risk of accident.

You should therefore adapt your driving style accordingly and drive carefully. Do not exceed the specified maximum speed with a tyre that has been repaired using tyre sealant.

The maximum permissible speed for a tyre sealed with tyre sealant is 80 km/h. The upper part of the TIREFIT sticker must be affixed to the instrument cluster where it will be easily seen by the driver.

If a tyre pressure of 200 kPa (2.0 bar/29 psi) has been reached after ten minutes:

- ▶ Switch off the tyre inflation compressor.
- ▶ Unscrew the filler hose from the valve of the faulty tyre.
  Tyre sealant may leak out when the filler hose is unscrewed.
- ▶ Stow the tyre sealant bottle, the tyre inflation compressor and the warning triangle.
- ▶ **Pull away immediately**.
- ▶ Stop after driving for approximately ten minutes and check the tyre pressure with the tyre inflation compressor.
  The tyre pressure must now be at least 130 kPa (1.3 bar/19 psi).

⚠ **WARNING**

If the required tyre pressure is not reached after driving for a short period, the tyre is too badly damaged. The tyre sealant cannot repair the tyre in this instance. Damaged tyres and a tyre pressure that is too low can significantly impair the vehicle's braking and driving characteristics. There is a risk of accident.

Do not continue driving. Contact a qualified specialist workshop.

Countries with Mercedes-Benz Service24h: you will find a sticker with the telephone number on the B-pillar on the driver's side, for example.

- Correct the tyre pressure if it is still at least 130 kPa (1.3 bar/19 psi). See the tyre pressure table on the fuel filler flap for values.
- **To increase the tyre pressure:** switch on the tyre inflation compressor.

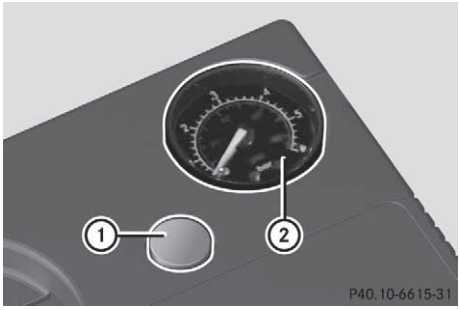

- **To reduce the tyre pressure:** depress pressure release button ① next to pressure gauge ②.
- When the tyre pressure is correct, unscrew the filler hose from the valve of the sealed tyre.
  Tyre sealant may leak out when the filler hose is unscrewed.
- Screw the valve cap onto the tyre valve of the sealed tyre.

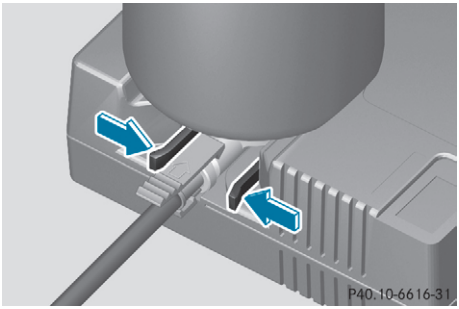

- To remove the tyre sealant bottle from the tyre inflation compressor, press together the locking tabs on the yellow cap.
- Pull the tyre sealant bottle out of the tyre inflation compressor.
  The filler hose stays on the tyre sealant bottle.
- Drive to the nearest qualified specialist workshop and have the tyre changed there.
- Have the tyre sealant bottle and the filler hose replaced as soon as possible at a qualified specialist workshop.
- Have the tyre sealant bottle replaced every four years at a qualified specialist workshop.

Battery (vehicle)

12 V battery – important safety notes

Hybrid vehicles: be sure to observe the separate operating instructions. You could otherwise fail to recognise dangers, e.g. due to high voltage.

Work on the battery, e.g. removing or fitting, requires specialist knowledge and the use of special tools. Therefore, always have work on the battery carried out at a qualified specialist workshop.

⚠ **WARNING**

Work carried out incorrectly on the battery can lead, for example, to a short circuit and thus damage the vehicle electronics. This can lead to function restrictions applying to safety-relevant systems, e.g the lighting system, the ABS (anti-lock braking system) or the ESP® (Electronic Stability Program). The operating safety of your vehicle may be restricted.

You could lose control of the vehicle, for example:

- when braking
- in the event of abrupt steering manoeuvres and/or when the vehicle's speed is not adapted to the road conditions

There is a risk of an accident.

In the event of a short circuit or a similar incident, contact a qualified specialist workshop immediately. Do not drive any further. Always have work on the battery carried out at a qualified specialist workshop.

Further information on ABS (▷ page 72) and ESP® (▷ page 75).

All vehicles except vehicles with a lithium-ion battery:

⚠ WARNING

Electrostatic build-up can lead to the creation of sparks, which could ignite the highly explosive gases of a battery. There is a risk of an explosion.

Before handling the battery, touch the vehicle body to remove any existing electrostatic build-up.

The highly flammable gas mixture is created while the battery is charging and when jump-starting.

Always make sure that neither you nor the battery is electrostatically charged. Electrostatic charge is created, for example:

- by wearing synthetic-fibre clothing
- by friction between clothing and the seat
- if you pull or push the battery across carpet or other synthetic materials
- if you rub the battery with a cloth

⚠ WARNING

During the charging process, a battery produces hydrogen gas. If a short circuit occurs or sparks are created, the hydrogen gas can ignite. There is a risk of an explosion.

- Make sure that the positive terminal of a connected battery does not come into contact with vehicle parts.
- Never place metal objects or tools on a battery.
- It is important that you observe the described order of the battery terminals when connecting and disconnecting a battery.
- When jump-starting, make sure that the battery poles with identical polarity are connected.
- It is particularly important to observe the described order when connecting and disconnecting the jump leads.
- Never connect or disconnect the battery terminals while the engine is running.

⚠ WARNING

Battery acid is caustic. There is a risk of injury.

Avoid contact with the skin, eyes or clothing. Do not breathe in any battery gases. Do not lean over the battery. Keep the batteries out of the reach of children. Immediately rinse off battery acid thoroughly with plenty of clean water and seek medical attention at once.

All vehicles:

Environmental note



Batteries contain pollutants. It is illegal to dispose of them with the household rubbish. They must be collected separately and disposed of in an environmentally responsible recycling system.



Dispose of batteries in an environmentally responsible manner. Take discharged batteries to a qualified specialist workshop or to a collection point for used batteries.

! Have the battery checked regularly at a qualified specialist workshop.

Observe the service intervals in the Service Booklet or contact a qualified specialist workshop for more information.

! Always have work on the batteries carried out at a qualified specialist workshop.

If it is necessary to disconnect the 12-volt battery yourself, please observe the following:

- secure the vehicle to prevent it from rolling away
- switch off the ignition
- disconnect the negative terminal first and then the positive terminal

Vehicles with automatic transmission: the transmission is locked in position P after disconnecting the battery.

After the work is completed, securely refit the battery and the positive terminal cover.

Comply with safety notes and take protective measures when handling batteries.



Risk of explosion.



Fire, naked flames and smoking are prohibited when handling the battery. Avoid creating sparks.



Electrolyte or battery acid is corrosive. Avoid contact with the skin, eyes and clothing.

Wear suitable protective clothing; in particular, gloves, an apron and a face mask.

Immediately rinse electrolyte or acid splashes off with clean water. Consult a doctor if necessary.



Wear eye protection.



Keep children at a safe distance.



Observe this Owner's Manual.

For safety reasons, Mercedes-Benz recommends that you use only batteries that have been tested and approved for your vehicle by Mercedes-Benz. These batteries provide increased impact protection to prevent vehicle occupants from suffering acid burns should the battery be damaged in the event of an accident.

In order for the battery to achieve the maximum possible service life, it should always be sufficiently charged.

Like other batteries, the vehicle battery may discharge over time if you do not use the vehicle. In such cases, have the battery disconnected at a qualified specialist workshop. However, you can also charge the battery with a charger recommended by Mercedes-Benz. For more information, please contact a qualified specialist workshop.

Have the battery charge checked more frequently if you use the vehicle mainly for short trips or if you leave it standing idle for an extended period. Consult a qualified specialist workshop if you wish to leave your vehicle parked up for a long period of time.

When you park the vehicle, remove the key if you do not require any electrical consumers. The vehicle will then use very little energy, thus conserving battery power.

Charging the 12 V battery

Vehicles with a lithium-ion battery:

! Only use battery chargers with a maximum charging voltage of 14.4 V.

All vehicles except vehicles with a lithium-ion battery:

! Only use battery chargers with a maximum charging voltage of 14.8 V.

⚠ WARNING

During charging and jump-starting, explosive gases can escape from the battery. There is a risk of an explosion.

Particularly avoid fire, naked flames, creating sparks and smoking. Ensure there is sufficient ventilation while charging and jump-starting. Do not lean over a battery.

⚠ WARNING

Battery acid is caustic. There is a risk of injury.

Avoid contact with the skin, eyes or clothing. Do not breathe in any battery gases. Do not lean over the battery. Keep the batteries out of the reach of children. Immediately rinse off battery acid thoroughly with plenty of clean water and seek medical attention at once.

⚠ WARNING

A discharged battery can freeze at temperatures below freezing point. When jump-starting the vehicle or charging the battery, gases can escape from the battery. There is a risk of an explosion.

Allow the frozen battery to thaw out before charging it or jump-starting.

All vehicles:

! Only charge the battery using the jump-start connection point.

The jump-starting connection point is in the engine compartment (▷ page 365).

- ▶ Open the bonnet.
- ▶ Connect the battery charger in the same order as when connecting the donor battery during jump-starting: to the positive terminal and earth point (▷ page 365).

Keep away from fire and naked flames. Do not lean over the battery. Never charge the battery if it is still fitted to the vehicle, unless you are using a battery charger that has been tested and approved by Mercedes-Benz. A battery charger unit specially adapted for Mercedes-Benz vehicles and tested and approved by Mercedes-Benz is available as an accessory. This device permits charging of the battery while it is fitted. Contact a Mercedes-Benz Service Centre for information and availability. Read the battery charger's operating instructions before charging the battery.

All vehicles except vehicles with a lithium-ion battery: if the warning and indicator lamps on the instrument cluster do not light up at low temperatures, it is very likely that the discharged battery has frozen. In this case, you may neither jump-start the vehicle nor charge the battery. The service life of a battery that has been thawed may be reduced. The starting characteristics may be impaired, especially at low temperatures. Have the thawed battery checked at a qualified specialist workshop.

Vehicles with a lithium-ion battery: at low temperatures, do not use a battery charger to charge a battery that has been removed. Allow the battery to warm up gently first, if necessary. Otherwise, the service life may be reduced and the starting characteristics impaired, especially at low temperatures.

Jump-starting

Hybrid vehicles: be sure to observe the separate operating instructions. You could otherwise fail to recognise dangers, e.g. due to high voltage.

For the jump-starting procedure, use only the jump-starting connection point, consisting of a positive terminal and an earth point, in the engine compartment.

All vehicles except vehicles with a lithium-ion battery:

⚠ WARNING

Battery acid is caustic. There is a risk of injury.

Avoid contact with the skin, eyes or clothing. Do not breathe in any battery gases. Do not lean over the battery. Keep the batteries out of the reach of children. Immediately rinse off battery acid thoroughly with plenty of clean water and seek medical attention at once.

⚠ WARNING

During charging and jump-starting, explosive gases can escape from the battery. There is a risk of an explosion.

Particularly avoid fire, naked flames, creating sparks and smoking. Ensure there is sufficient ventilation while charging and jump-starting. Do not lean over a battery.

⚠ WARNING

During the charging process, a battery produces hydrogen gas. If a short circuit occurs or sparks are created, the hydrogen gas can ignite. There is a risk of an explosion.

- Make sure that the positive terminal of a connected battery does not come into contact with vehicle parts.
- Never place metal objects or tools on a battery.
- It is important that you observe the described order of the battery terminals when connecting and disconnecting a battery.
- When jump-starting, make sure that the battery poles with identical polarity are connected.
- It is particularly important to observe the described order when connecting and disconnecting the jump leads.
- Never connect or disconnect the battery terminals while the engine is running.

⚠ WARNING

A discharged battery can freeze at temperatures below freezing point. When jump-starting the vehicle or charging the battery, gases can escape from the battery. There is a risk of an explosion.

Allow the frozen battery to thaw out before charging it or jump-starting.

If the warning and indicator lamps do not light up on the instrument cluster when temperatures are low, it is probably because the discharged battery has frozen. In this case, you may neither jump-start the vehicle nor charge the battery. The service life of a battery that has been thawed may be reduced. The starting characteristics may be impaired, especially at low temperatures. Have the thawed battery checked at a qualified specialist workshop.

All vehicles:

! **Vehicles with a petrol engine:** avoid repeated and lengthy starting attempts. Otherwise, the non-combusted fuel may damage the catalytic converter.

Do not use a rapid charging device to start the vehicle. If your vehicle's battery is discharged, the engine can be jump-started from another vehicle or from a donor battery using jump leads. Observe the following points:

- the battery is not accessible in all vehicles. If the other vehicle's battery is not accessible, jump-start the vehicle using a donor battery or a jump-starting device.
- **Vehicles with a petrol engine:** jump-start the vehicle only when the engine and exhaust system are cold.
- **All vehicles except vehicles with a lithium-ion battery:** do not start the engine if the battery is frozen. Let the battery thaw first.
- Jump-starting may be performed using only batteries with a nominal voltage of 12 V.
- Use only jump leads that have a sufficient cross-section and insulated terminal clamps.
- If the battery is fully discharged, leave the battery that is being used to jump-start connected for a few minutes before attempting to start. This charges the empty battery a little.
- Make sure that the two vehicles do not touch.

Make sure that:

- the jump leads are not damaged
- non-insulated parts of the terminal clamps do not come into contact with other metal parts while the jump leads are connected to the battery
- the jump leads cannot come into contact with parts that can move when the engine is running, such as the V-belt pulley or the fan

▶ Secure the vehicle by applying the electric parking brake.

▶ **Automatic transmission:** shift the transmission to position P.

▶ **Manual transmission:** depress the clutch pedal fully and shift to neutral.

▶ Make sure that the ignition is switched off. All indicator lamps on the instrument cluster must be off. When using the key in the ignition lock, turn the key to position 0 and remove it (▷ page 153).

▶ Switch off all electrical consumers, e.g. rear window heating, lighting etc.

▶ Open the bonnet.

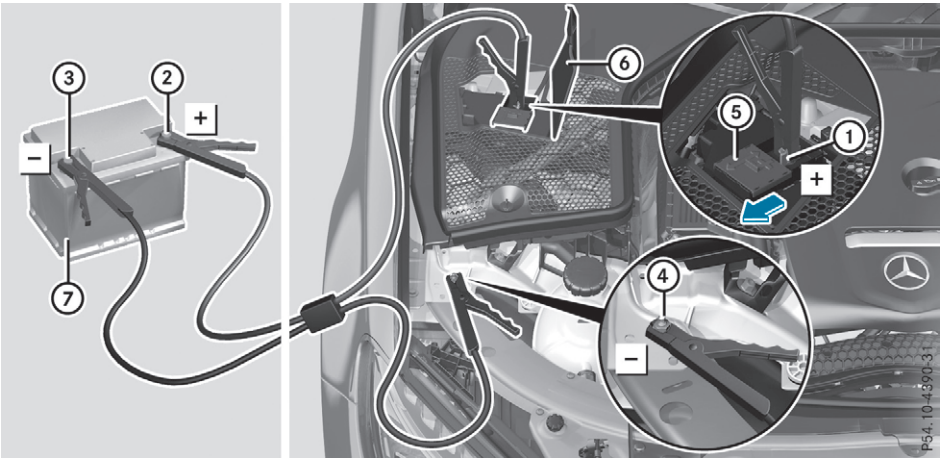

Position number ⑦ identifies the charged battery of the other vehicle or an equivalent jump-starting device.

▶ Lift up panel ⑥.

▶ Slide cover ⑤ of positive terminal ① in the direction of the arrow.

▶ Connect positive terminal ① on your vehicle to positive terminal ② of donor battery ⑦ using the jump lead. Always begin with positive terminal ① on your own vehicle.

▶ Start the engine of the donor vehicle and run it at idling speed.

▶ Connect negative terminal ③ of donor battery ⑦ to earth point ④ of your vehicle using the jump lead, Connect the jump lead to donor battery ⑦ first.

▶ Start the engine.

▶ Before disconnecting the jump leads, let the engines run for several minutes.

▶ First, remove the jump leads from earth point ④ and negative terminal ③, then from positive terminal ① and positive terminal ②. Each time, begin at the contacts on your own vehicle.

▶ Close cover ⑤ of positive terminal ① after removing the jump leads.

▶ Fold panel ⑥ shut.

▶ Have the battery checked at a qualified specialist workshop.

Jump-starting is not considered to be a normal operating condition.

ⓘ Jump-starting cables and further information regarding jump-starting can be obtained at any qualified specialist workshop.

Towing away and tow-starting

Important safety notes

Hybrid vehicles: be sure to observe the separate operating instructions. You could otherwise fail to recognise dangers, e.g. due to high voltage.

⚠ **WARNING**

Safety relevant functions are restricted or no longer available if:

- the engine is not running
- the brake system or power steering is malfunctioning
- there is a malfunction in the voltage supply or the vehicle's electrical system

When your vehicle is towed away or towed started, you may require considerably more effort to steer and brake. There is a risk of an accident.

In such cases use a rigid towing bar. Before being towed away or tow started, make sure the steering moves freely.

⚠ **WARNING**

If the steering wheel lock is engaged, the vehicle can no longer be steered. There is a risk of an accident.

Always switch on the ignition when towing with a tow rope or a towing bar.

⚠ **WARNING**

When towing or tow-starting another vehicle and its weight is greater than the permissible gross weight of your vehicle, the:

- towing eye may be torn off
- car/trailer combination may swerve or even overturn

There is a risk of an accident.

When towing or tow-starting another vehicle, its weight should not be greater than the permissible gross weight of your vehicle.

Details on the permissible gross vehicle weight of your vehicle can be found on the vehicle identification plate (▷ page 394).

! When Active Brake Assist, Distance Pilot DISTRONIC or the HOLD function is activated, the vehicle brakes automatically in certain situations.

To avoid damage to the vehicle, deactivate these systems in the following or similar situations:

- when towing away
- in a car wash

! Make sure that the electric parking brake is released. If the electric parking brake is faulty, visit a qualified specialist workshop.

! Only secure the tow cable or tow bar to the towing eyes or, if available, to the trailer tow hitch. You could otherwise damage the vehicle.

! Observe the following points when towing with a tow rope:

- Secure the tow rope on the same side on both vehicles.
- Make sure that the tow rope is not longer than legally permitted. Mark the tow rope in the middle, e.g. with a white cloth (30 x 30 cm). This will make other road users aware that a vehicle is being towed.
- Only secure the tow cable to the towing eyes or, if available, to the trailer tow hitch.
- Observe the brake lamps of the towing vehicle while driving. Always maintain a distance so that the tow rope does not sag.
- Do not use steel cables or chains to tow your vehicle. You could otherwise damage the vehicle.

! Do not use the trailer tow hitch for recovery or towing. Do not use the towing eye for recovery. This could damage the vehicle. If in doubt, have the vehicle recovered using a crane.

! Pull away smoothly when towing away or tow-starting a vehicle. If the tractive power is too high, the vehicles could be damaged.

! Shift the automatic transmission to position N and do not open the driver's or front-passenger door when towing the vehicle away. Otherwise, the automatic transmission may shift to position P and this can cause damage to the transmission.

! You may tow the vehicle for a maximum of 50km. A towing speed of 50 km/h must not be exceeded.

For towing distances over 50 km, the entire vehicle must be lifted up and transported.

Observe the legal requirements in each individual country when towing.

It is better to have the vehicle transported than to have it towed.

If the vehicle has suffered transmission damage, have it transported on a transporter or trailer.

Vehicles with automatic transmission: the automatic transmission must be in position N when the vehicle is being towed. If the automatic transmission cannot be shifted to position N, have the vehicle transported on a transporter or trailer.

The battery must be connected and charged. Otherwise, you:

- cannot turn the key to position 2 in the ignition lock
- cannot release the electric parking brake
- cannot shift the transmission to position N on vehicles with automatic transmission

Deactivate the automatic locking feature before towing the vehicle (▷ page 92). You could otherwise be locked out when pushing or towing the vehicle.

Deactivate tow-away protection before the vehicle is towed (▷ page 83).

Fitting/removing the towing eye

Fitting the towing eye

⚠ **WARNING**

The exhaust tail pipe may be extremely hot. There is a risk of burning when removing the rear cover.

Do not touch the exhaust tail pipe. Use extreme caution when removing the rear cover.

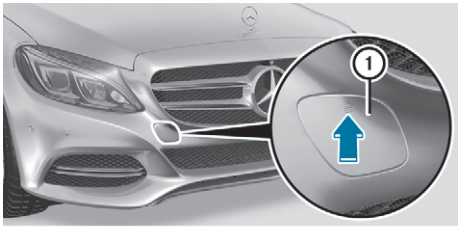

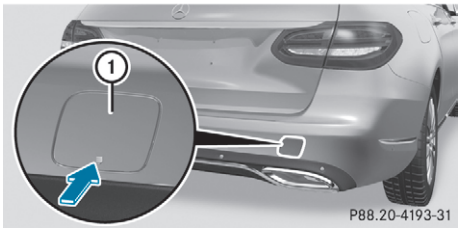

The brackets for the screw-in towing eye are located in the bumpers. They are located at the rear and at the front, under covers ①.

- ▶ Remove the towing eye from the bracket (▷ page 357).
- ▶ Press the mark on cover ① inwards and remove.
- ▶ Screw in the towing eye clockwise as far as it will go and tighten it.

Vehicles with a trailer tow hitch do not have a bracket at the rear for the screw-in towing eye. Connect the towbar to the trailer tow hitch (▷ page 235).

Removing the towing eye

- ▶ Loosen the towing eye and unscrew it.
- ▶ Attach cover ① to the bumper and press until it engages.

Towing the vehicle away with the rear axle raised

When towing your vehicle away with the rear axle raised, it is important that you observe the safety instructions (▷ page 368).

Only vehicles without 4MATIC can be towed away with the rear axle raised.

! Vehicles with 4MATIC must not be towed with the front or rear axle raised; otherwise, the transmission may be damaged.

Vehicles with 4MATIC may either be towed with both axles on the ground or be loaded and transported.

! Vehicles with automatic transmission must not be towed with the rear axle raised. The car/trailer combination may otherwise swerve or even overturn.

! The ignition must be switched off if you are towing the vehicle with the rear axle raised. Intervention by ESP® could otherwise damage the brake system.

- ▶ Switch on the hazard warning lamps (▷ page 123).
- ▶ Move the front wheels to the straight-ahead position.
- ▶ If necessary, turn the key in the ignition lock to position 0 and remove the key from the ignition lock.
- ▶ When leaving the vehicle, take the key with you.

Towing the vehicle away with all wheels on the ground

Vehicles with automatic transmission: The automatic transmission automatically shifts to position P when you open the driver's or front-passenger door or when you remove the key from the ignition lock. In order to ensure that the automatic transmission stays in position N when towing away the vehicle, you must observe the following points:

- ▶ Make sure that the vehicle is stationary.
- ▶ Turn the key to position 2 in the ignition lock.
- ▶ Depress the brake pedal and keep it depressed.
- ▶ Shift the automatic transmission to position N.

Vehicles with manual transmission:

- ▶ Turn the key to position 2 in the ignition lock.
- ▶ Depress the brake pedal and keep it depressed.
- ▶ Depress the clutch pedal fully and shift to neutral.

All vehicles:

- ▶ Leave the key in position 2 in the ignition lock.
- ▶ Release the brake pedal.
- ▶ Release the electric parking brake.
- ▶ Switch on the hazard warning lamps (▷ page 123).

In order to signal a change of direction when towing the vehicle with the hazard warning lamps switched on, use the combination switch as usual. In this case, only the turn signals for the desired direction flash. When you reset the combination switch, the hazard warning lamps start flashing again.

Transporting the vehicle

4MATIC vehicles/vehicles with automatic transmission

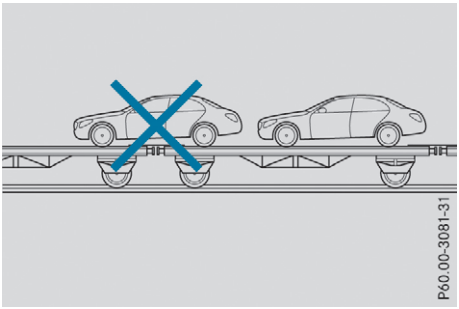

! When the vehicle is loaded for transport, the front and rear axles must be stationary and on the same transportation vehicle. Positioning over the connection point of the transport vehicle is not permitted. The drive train may otherwise be damaged.

Vehicles with ADS PLUS (Adaptive Damping System PLUS)

⚠ **WARNING**

The lower damping forces of the vehicle to be transported can cause the vehicle/trailer combination to swing.

As a result, when transporting vehicles with the Adaptive Damping System PLUS, the vehicle/trailer combination may start to skid. Consequently, you could lose control of your vehicle.

There is a risk of accident and injury.

When transporting, make sure that:

- the vehicle has been loaded onto the transporter correctly
- the vehicle is secured at all four wheels with suitable tensioning straps
- the maximum permissible speed of 60 km/h is not exceeded

! After loading, the vehicle must be secured at all four wheels. Otherwise, the vehicle could be damaged.

A minimum distance of 20 cm upwards and 10 cm downwards must be maintained to the transport platform.

▶ Secure all four wheels after loading the vehicle.

All vehicles

! You may only secure the vehicle by the wheels, not by parts of the vehicle such as axle or steering components. Otherwise, the vehicle could be damaged.

The towing eye or trailer tow hitch can be used to pull the vehicle onto a trailer or transporter if you wish to transport it.

▶ **Vehicles with manual transmission:** depress the clutch pedal fully and shift to neutral.

▶ **Vehicles with automatic transmission:** turn the key to position 2 in the ignition lock.

▶ Shift the automatic transmission to position N.

As soon as the vehicle is loaded:

▶ Secure the vehicle against rolling away by applying the electric parking brake.

▶ **Vehicles with manual transmission:** fully depress the clutch pedal and engage first or reverse gear.

▶ **Vehicles with automatic transmission:** shift the automatic transmission to position P.

▶ Turn the key to position 0 in the ignition lock and remove it.

▶ Secure the vehicle.

Notes for 4MATIC vehicles

! Vehicles with 4MATIC must not be towed with the front or rear axle raised; otherwise, the transmission may be damaged.

Vehicles with 4MATIC may either be towed away with both axles on the ground or be loaded up and transported.

If the vehicle has transmission damage or damage to the front or rear axle, have it transported on a transporter or trailer.

In the event of damage to the electrical system: if the battery is defective, the automatic transmission will be locked in position **P**. To shift the automatic transmission to position **N**, you must provide power to the vehicle's electrical system in the same way as when jump-starting (▷ page 365).

Have the vehicle transported on a transporter or trailer.

Tow-starting (emergency engine starting)

! Do not tow-start vehicles with automatic transmission. You could otherwise damage the automatic transmission.

i You can find information on "Jump-starting" under (▷ page 365).

Before tow-starting, the following conditions must be fulfilled:

- the battery is connected
- the engine has cooled down
- the exhaust system has cooled down

When tow-starting, it is important that you observe the safety notes (▷ page 368) and the legal requirements in each respective country.

▶ Switch on the hazard warning lamps (▷ page 123).

▶ Fit the towing eye (▷ page 369).

▶ Secure the rigid towing bar or the towing rope.

▶ Depress the brake pedal and keep it depressed.

▶ Turn the key to position 2 in the ignition lock .

▶ Depress the clutch pedal fully, engage second gear and continue to keep the clutch pedal fully depressed.

- ▶ Release the brake pedal.
- ▶ Tow-start the vehicle.
- ▶ Release the clutch pedal slowly; do not depress the accelerator pedal while doing so.
- ▶ When the engine has been started, immediately depress the clutch pedal fully and shift to neutral.
- ▶ Pull over at a suitable place and stop the vehicle safely, paying attention to road and traffic conditions.
- ▶ Use the electric parking brake to secure the vehicle and prevent it from rolling away.
- ▶ Remove the rigid towing bar or towing rope.
- ▶ Remove the towing eye (▷ page 369).
- ▶ Switch off the hazard warning lamps.

Fuses

Important safety notes

⚠ WARNING

If you manipulate, bridge or replace a faulty fuse with a fuse of a higher amperage, the electric cables could be overloaded. This may result in a fire. There is a risk of an accident and injury.

Always replace faulty fuses with specified new fuses of the correct amperage.

Blown fuses must be replaced with fuses of the same rating, which you can recognise by the colour and fuse rating. The fuse ratings are listed in the fuse allocation chart.

The fuse allocation chart is on the fuse box in the luggage compartment (▷ page 373).

If the newly inserted fuse also blows, have the cause traced and rectified at a qualified specialist workshop, e.g. a Mercedes-Benz Service Centre.

! Only use fuses that have been approved for Mercedes-Benz vehicles and which have the correct fuse rating for the system concerned. Otherwise, components or systems could be damaged.

! Make sure that no moisture can enter the fuse box when the cover is open.

! When closing the cover, make sure that it is lying correctly on the fuse box. Moisture seeping in or dirt could otherwise impair the operation of the fuses.

The fuses in your vehicle disconnect faulty circuits. If a fuse blows, all the components on the circuit and their functions will fail.

Before replacing a fuse

Observe the important safety notes (▷ page 372)

- ▶ Switch off the engine.
- ▶ Switch off all electrical consumers.
- ▶ Make sure that the ignition is switched off (▷ page 154).

or

- ▶ When using the key, turn the key to position 0 in the ignition lock and remove the key (▷ page 153).
- ▶ Secure the vehicle against rolling away (▷ page 180).

All indicator lamps on the instrument cluster must be off.

The fuses are located in various fuse boxes:

- fuse box on the driver's side of the dashboard
- fuse box in the front-passenger footwell
- fuse box in the engine compartment on the driver's side
- fuse box under the luggage compartment floor on the right-hand side of the vehicle, when viewed in the direction of travel

Dashboard fuse box

The fuse box is under a cover on the side of the dashboard. You can obtain further information from a Mercedes-Benz Service Centre.

Fuse box in the front-passenger footwell

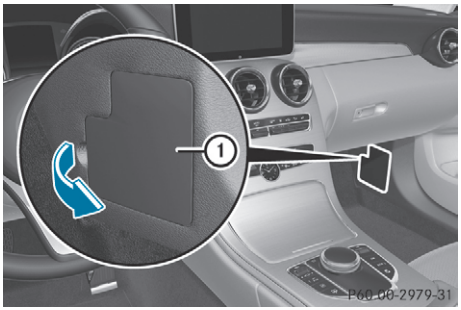

- Open the front-passenger door.
- **To open:** fold cover ① out towards the rear and remove it.
- **To close:** clip in cover ① at the rear.
- Fold cover ① forwards until it engages.

Fuse box in the engine compartment

⚠ WARNING

When the bonnet is open, and the windscreen wipers are set in motion, you can be injured by the wiper linkage. There is a risk of injury.

Always switch off the windscreen wipers and the ignition before opening the bonnet.

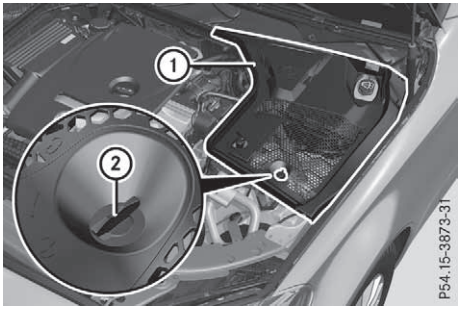

- Open the bonnet (▷ page 342).
- **To open:** turn the fastener ② on the cover ① anti-clockwise as far as it will go.
- Remove fuse box cover ① upwards.

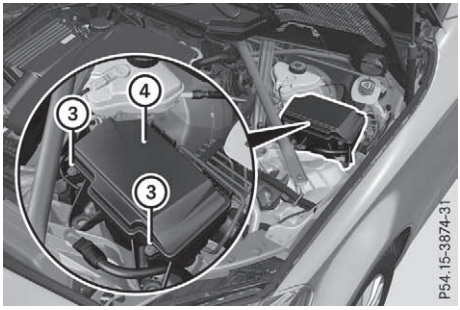

- Remove any existing moisture from the fuse box using a dry cloth.
- Loosen screws ③, fold up fuse box lid ④ and remove it.
- **To close:** check whether the seal is positioned correctly in lid ④.
- Insert lid ④ into the bracket at the rear of the fuse box.
- Fold down lid ④ of the fuse box and tighten screws ③.
- Insert cover ① and turn the fastener ② clockwise as far as it will go.
- Close the bonnet.

Fuse box in the luggage compartment

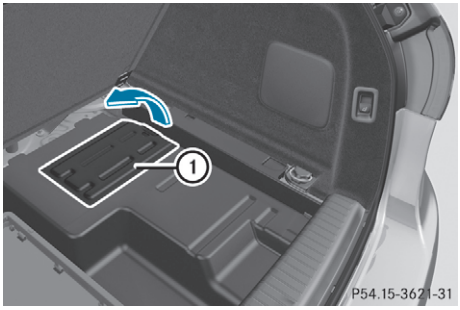

To open

- Open the tailgate.
- Swing the luggage compartment floor upwards (▷ page 330).
- Lift up cover ① in the recess trim panel of the luggage compartment in the direction of the arrow.

To close

▶ Fold back cover ① in the opposite direction to the arrow.

Make sure that cover ① lies in the opening provided for it in the recess trim panel.

ⓘ The fuse allocation chart is in a recess on the side of the fuse box. You can find the corresponding fuse rating and fuse type on the fuse allocation chart.

Important safety notes

⚠ WARNING

If wheels and tyres of the wrong size are used, the wheel brakes or suspension components may be damaged. There is a risk of an accident.

Always replace wheels and tyres with those that fulfil the specifications of the original part.

When replacing wheels, make sure to fit the correct:

- designation
- type

When replacing tyres, make sure to fit the correct:

- designation
- manufacturer
- type

⚠ WARNING

A flat tyre severely impairs the driving, steering and braking characteristics of the vehicle. There is a risk of accident.

Tyres without run-flat characteristics:

- do not drive with a flat tyre.
- immediately replace the flat tyre with your emergency spare wheel or spare wheel, or consult a qualified specialist workshop.

Tyres with run-flat characteristics:

- pay attention to the information and warning notices on MOExtended tyres (tyres with run-flat characteristics).

Accessories that are not approved for your vehicle by Mercedes-Benz or are not being used correctly can impair operating safety.

Before purchasing and using non-approved accessories, visit a qualified specialist workshop and enquire about:

- suitability
- legal stipulations
- factory recommendations

Further information regarding wheels and tyres can be found under "Wheel/tyre combinations" (▷ page 389).

You can ask for information regarding permitted wheel/tyre combinations at a Mercedes-Benz Service Centre.

Information on tyre pressure can be found:

- in the tyre pressure table in the fuel filler flap (▷ page 176)
- under "Tyre pressure" (▷ page 378)

Modifications to the brake system and wheels are not permitted. The use of spacers or brake dust shields is not permitted. This invalidates the general operating permit for the vehicle.

ⓘ Further information on wheels and tyres can be obtained at any qualified specialist workshop.

Operation

Information on driving

When the vehicle is heavily laden, check the tyre pressures and adjust them prior to a trip.

While driving, pay attention to vibrations, noises and unusual handling characteristics, e.g. pulling to one side. This may indicate that the wheels or tyres are damaged. If you suspect that a tyre is defective, reduce your speed immediately. Stop the vehicle as soon as possible to check the wheels and tyres for damage. Hidden tyre damage could also be causing the unusual handling characteristics. If you find no signs of damage, have the tyres and wheels checked at a qualified specialist workshop.

When parking your vehicle, make sure not to squash the tyre. If you cannot avoid driving over obstacles, e.g. kerbs, do so slowly and at an obtuse angle only. You could otherwise damage the wheel rims and tyres.

Notes on sport tyres

⚠ WARNING

Due to the special tyre tread in combination with the optimised rubber compound, there is an increased risk of aquaplaning and skidding on a damp or wet road surface. Tyre grip is also noticeably reduced at low outside tem-

peratures and low tyre operating temperatures. There is a risk of an accident.

Turn on ESP® and adapt your driving style accordingly. When the outside temperature falls below 10 °C, use M+S tyres.

ⓘ Different driving styles may lead to higher levels of tyre wear, meaning the tyres may wear down to the minimum tyre tread depth after less mileage.

Regular checking of wheels and tyres

⚠ **WARNING**

Damaged tyres can cause tyre inflation pressure loss. As a result, you could lose control of your vehicle. There is a risk of accident.

Check the tyres regularly for signs of damage and replace any damaged tyres immediately.

Check wheels and tyres for damage at least once a month. Check wheels and tyres after driving off-road or on rough roads. Damaged wheels can cause a loss of tyre pressure.

Pay particular attention to damage such as:

- cuts in the tyres
- punctures
- tears in the tyres
- bulges on the tyres
- deformation or severe corrosion on the wheels

Regularly check the tyre tread depth and the condition of the tread across the whole width of the tyre (▷ page 376). If necessary, turn the front wheels to full lock to make it easier to inspect the inner side of the tyre surface.

All wheels must have a valve cap to protect the valve against dirt and moisture. Do not fit anything onto the valve other than the standard valve cap or other valve caps specially approved for your vehicle by Mercedes-Benz. Do not fit any other valve caps or systems, e.g. tyre pressure monitors.

Check the pressure of all tyres regularly as well as prior to long trips. Adjust the tyre pressures as necessary (▷ page 378).

Observe the notes on the emergency spare wheel (▷ page 390).

The service life of a tyre depends on various factors, including the following:

- driving style
- tyre pressure
- mileage

Notes on the tyre tread

⚠ **WARNING**

Insufficient tyre tread will reduce tyre traction. The tyre is no longer able to dissipate water. This means that on wet road surfaces, the risk of aquaplaning increases, in particular where speed is not adapted to suit the driving conditions. There is a risk of accident.

If the tyre pressure is too high or too low, tyres may exhibit different levels of wear at different locations on the tyre tread. Thus, you should regularly check the tread depth and the condition of the tread across the entire width of all tyres.

Minimum tyre tread depth for:

- summer tyres: 3 mm
- M+S tyres: 4 mm

For safety reasons, replace the tyres before the legally prescribed limit for the minimum tyre tread depth is reached.

Selecting, fitting and replacing tyres

⚠ **WARNING**

Exceeding the stated tyre load-bearing capacity and the approved maximum speed could lead to tyre damage or the tyre bursting. There is a risk of accident.

Therefore, only use tyre types and sizes approved for your vehicle model. Observe the tyre load rating and speed rating required for your vehicle.

Pay special attention to country-specific requirements for tyre approval. These requirements may stipulate a specific tyre type for your vehicle. Furthermore, the use of a specific tyre type in certain regions and areas of operation can be highly beneficial. You can find further

information regarding tyres at specialist tyre retailers, at qualified specialist workshops or at any Mercedes-Benz Service Centre.

- use only tyres and wheels of the same type and make

  exception: it is permissible to fit a different type or make in the event of a flat tyre, observe the "MOExtended tyres (tyres with run-flat characteristics)" section (▷ page 358)
- fit only tyres of the correct size onto the wheels
- run in new tyres at moderate speeds for the first 100 km, they reach their full performance only after this distance
- do not drive with tyres that have too little tread depth, this significantly reduces traction on wet roads (aquaplaning)
- replace the tyres after six years at the latest, regardless of wear

Observe the notes on the emergency spare wheel (▷ page 390).

MOExtended tyres (tyres with run-flat characteristics)

With MOExtended tyres (tyres with run-flat characteristics), you can continue to drive your vehicle even if there is a total loss of pressure in one or more tyres.

MOExtended tyres may be used only in conjunction with an activated tyre pressure loss warning system or with an activated tyre pressure monitor and only on wheels specifically tested by Mercedes-Benz.

Notes on driving with MOExtended tyres with a flat tyre (▷ page 358).

Vehicles with MOExtended tyres are not equipped with a TIREFIT kit at the factory. It is therefore recommended that you additionally equip your vehicle with a TIREFIT kit if you fit tyres that do not feature run-flat characteristics, e.g. winter tyres. A TIREFIT kit can be obtained from a qualified specialist workshop.

Winter operation

General notes

Have your vehicle winterproofed at a qualified specialist workshop at the onset of winter.

Observe the notes in the "Changing a wheel" section (▷ page 384).

Driving with summer tyres

At temperatures below +7 °C, summer tyres lose elasticity and therefore traction and braking power. Change the tyres on your vehicle to M+S tyres. Using summer tyres at very cold temperatures could cause tears to form, thereby damaging the tyres permanently. Mercedes-Benz cannot accept responsibility for this type of damage.

⚠ WARNING

Damaged tyres can cause tyre inflation pressure loss. As a result, you could lose control of your vehicle. There is a risk of accident.

Check the tyres regularly for signs of damage and replace any damaged tyres immediately.

M+S tyres

⚠ WARNING

M+S tyres with a tyre tread depth of less than 4 mm are not suitable for use in winter as they do not provide sufficient traction. There is a risk of accident.

M+S tyres with a tread depth of less than 4 mm must be replaced.

At temperatures below +7 °C, use winter tyres or all-season tyres. Both types of tyre are identified by the M+S marking.

Only winter tyres bearing the snowflake symbol in addition to the M+S marking provide the best possible grip in wintry road conditions. Only these tyres will allow driving safety systems such as ABS and ESP® to function optimally in winter. These tyres have been developed specifically for driving in snow.

Use M+S tyres of the same make and tread on all wheels to maintain safe handling characteristics.

Always observe the maximum permissible speed specified for the M+S tyres you have fitted.

If you fit M+S tyres that have a lower maximum permissible speed than that of the vehicle, affix

an appropriate warning label in the driver's field of vision. This can be obtained at a qualified specialist workshop.

Under these circumstances, you should also restrict the maximum design speed of the vehicle using the permanent limiter so that it does not exceed the maximum permissible speed for the M+S tyres (▷ page 191).

When you have fitted the M+S tyres:

- ▶ Check the tyre pressures (▷ page 378).
- ▶ Restart the tyre pressure loss warning system (▷ page 380).
- ▶ Restart the tyre pressure monitor (▷ page 382).

Information about driving with an emergency spare wheel (▷ page 390).

Snow chains

⚠ **WARNING**

If you have fitted snow chains to the front wheels, they may scrape against the vehicle body or chassis components. This could cause damage to the vehicle or the tyres. There is a risk of an accident.

To avoid hazardous situations:

- never fit snow chains on the front wheels
- fit snow chains to the rear wheels in pairs.

❗ **Vehicles with steel wheels:** if you fit snow chains on steel wheels, you may damage the hub caps. Remove the hub caps from the relevant wheels before fitting the snow chains.

For safety reasons, Mercedes-Benz recommends that you use only snow chains that have been approved for Mercedes-Benz or that are of an equivalent standard of quality. For more information, please contact a qualified specialist workshop.

If you wish to fit snow chains, please observe the following:

- snow chains cannot be fitted to all wheel/tyre combinations, observe the information regarding permitted wheel/tyre combinations (▷ page 389)
- use snow chains only if the road surface is completely snow-covered and remove the snow chains as soon as possible when you come to a road that is not snow-covered
- local regulations may restrict the use of snow chains, observe the appropriate regulations if you wish to fit snow chains
- do not exceed the maximum permissible speed of 50 km/h
- on vehicles with AIRMATIC, you must drive only at a raised vehicle level if snow chains have been fitted (▷ page 203)
- you must never use Parking Pilot (▷ page 205) when snow chains are fitted

You may wish to deactivate ESP® when pulling away with snow chains fitted:

- all vehicles (except Mercedes-AMG vehicles) (▷ page 76)
- Mercedes-AMG vehicles (▷ page 77)

This allows the wheels to spin in a controlled manner, achieving increased propulsive force (cut).

Information about driving with an emergency spare wheel (▷ page 390).

Tyre pressure

Tyre pressure specifications

⚠ **WARNING**

Underinflated or overinflated tyres pose the following risks:

- the tyres may burst, especially as the load and vehicle speed increase.
- the tyres may wear excessively and/or unevenly, which may greatly impair tyre traction.
- the driving characteristics, as well as steering and braking, may be greatly impaired.

There is a risk of an accident.

Observe the recommended tyre pressure and check the tyre pressure of all the tyres including the spare wheel:

- at least every two weeks
- when the load changes
- before embarking on a longer journey
- for changed operating conditions, e.g. off-road driving

If necessary, correct the tyre pressure.

⚠ WARNING

If you fit unsuitable accessories onto tyre valves, the tyre valves may be overloaded and malfunction, which can cause tyre pressure loss. Due to their design, retrofitted tyre pressure monitors keep the tyre valve open. This can also result in tyre pressure loss. There is a risk of accident.

Only screw standard valve caps or valve caps specifically provided by Mercedes-Benz for your vehicle onto the tyre valve.

⚠ WARNING

If the tyre pressure drops repeatedly, the wheel, valve or tyre may be damaged. Tyre pressure that is too low may result in a tyre blow-out. There is a risk of accident.

- Check the tyre for foreign objects.
- Check whether the wheel is losing air or the valve is leaking.

If you are unable to rectify the damage, contact a qualified specialist workshop.

Environmental note

Check the tyre pressure regularly, at least every 14 days.

The recommended tyre pressures for various operating conditions can be found on the tyre pressure table inside the fuel filler flap (▷ page 176).

Operation with emergency spare wheel: information on operation with the emergency spare wheel can be found under "Emergency spare wheel" (▷ page 391).

Operation with a trailer: the applicable value for the rear axle is the maximum value stated on the tyre pressure table inside the fuel filler flap.

The tyre pressure table may also state tyre pressures for different load conditions. These are defined on the table as different numbers of passengers and amounts of luggage. The actual number of seats may differ from this.

If tyre sizes are not specified, the tyre pressures stated on the tyre pressure table apply for all tyres approved at the factory for this vehicle.

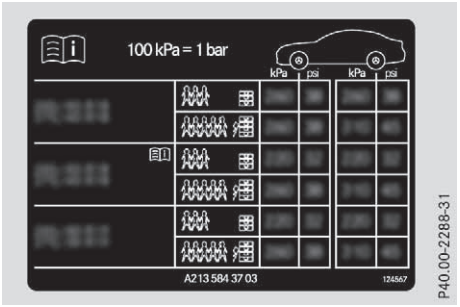

If one or more tyre sizes precedes a tyre pressure, the following tyre pressure information is valid only for that tyre size.

If the tyre sizes are followed by the 📖 symbol, the following tyre pressure information shows alternative tyre pressures. These tyre pressures can improve the driving comfort of your vehicle. Fuel consumption may then increase slightly.

Use a suitable pressure gauge to check the tyre pressure. The outer appearance of a tyre does not give any reliable indication of the tyre pressure. On vehicles fitted with the electronic tyre pressure monitor, you can also check the tyre pressure using the on-board computer.

If possible, correct tyre pressures only when the tyres are cold.

The tyres are cold:

- if the vehicle has been parked with the tyres out of direct sunlight for at least three hours and
- if the vehicle has not been driven further than 1.6 km

Depending on the outside temperature, the vehicle speed and the load on the tyres, the tyre temperature and thus the tyre pressure changes by approximately 10 kPa (0.1 bar/1.5 psi) per 10 °C. Take this into account when checking the pressure of warm tyres. Correct the tyre pressure only if it is too low for the current operating condition.

Driving with a tyre pressure that is too high or too low can:

- shorten the service life of the tyres
- cause increased tyre damage
- have a negative effect on handling characteristics and thus driving safety (e.g. aquaplaning)

The tyre pressure values given for low loads are minimum values that offer you good driving comfort characteristics.

However, you can also use the values given for higher loads. These are permissible and will not adversely affect the running of the vehicle.

Tyre pressure loss warning system

General notes

While the vehicle is in motion, the tyre pressure loss warning system monitors the set tyre pressure using the rotational speed of the wheels. This enables the system to detect significant pressure loss in a tyre. If the rotational speed of a wheel changes as a result of a loss of tyre pressure, a corresponding warning message will appear on the multifunction display.

You can recognise the tyre pressure loss warning by the Run Flat Indicator active Restart with OK message, which appears on the Service menu of the multifunction display. Information on the message display can be found in the "Restarting the tyre pressure loss warning system" section (▷ page 380).

Important safety notes

The tyre pressure warning system does not warn you of an incorrectly set tyre pressure. Observe the notes on the recommended tyre pressure (▷ page 378).

The tyre pressure loss warning system does not replace the need to regularly check the tyre pressure. An even loss of pressure on several tyres at the same time cannot be detected by the tyre pressure loss warning system.

The tyre pressure loss warning system is not able to warn you of a sudden loss of air, e.g. if the tyre is penetrated by a foreign object. In this event, bring the vehicle to a halt by braking carefully. Avoid abrupt steering manoeuvres.

The function of the tyre pressure loss warning system is limited or delayed if:

- snow chains are fitted on your vehicle
- road conditions are wintry
- you are driving on a loose surface (e.g. sand or gravel)
- you adopt a very sporty driving style (cornering at high speeds or driving with high rates of acceleration)
- you are towing a very heavy or large trailer
- you are driving with a heavy load (in the vehicle or on the roof)

Restarting the tyre pressure loss warning system

Restart the tyre pressure loss warning system if you have:

- changed the tyre pressure
- changed the wheels or tyres
- fitted new wheels or tyres

▶ Before restarting, make sure that the tyre pressures are set properly on all four tyres for the respective operating conditions. The recommended tyre pressures can be found in the tyre pressure table on the fuel filler flap.

The tyre pressure loss warning system can only give reliable warnings if you have set the correct tyre pressure. If an incorrect tyre pressure is set, this incorrect value will be monitored.

▶ Observe the notes in the section on tyre pressures (▷ page 378).

▶ Make sure that the key is in position 2 in the ignition lock (▷ page 153).

▶ Press ⌂ on the steering wheel to call up the menu list.

▶ Press ▲ or ▼ on the steering wheel to select the Service menu.

▶ Confirm by pressing OK on the steering wheel.

▶ Select Tyre pressure by pressing ▲ or ▼.

▶ Press OK to confirm.
The Run Flat Indicator active message is shown on the multifunction display Restart with OK.

If you wish to confirm the restart:

▶ Press button OK.
The Tyre pressure now OK? message is shown on the multifunction display.

▶ Select Yes by pressing ▲ or ▼.

▶ Press OK to confirm.
The Run Flat Indicator restarted message is shown on the multifunction display.

After a teach-in period, the tyre pressure loss warning system will monitor the set tyre pressures of all four tyres.

If you wish to cancel the restart:

- ▶ Press button [↩].

or

- ▶ If the Tyre pressure now OK? message appears, press [▲] or [▼] to select Cancel.
- ▶ Press [OK] to confirm.
  The tyre pressure values stored at the last restart will continue to be monitored.

Tyre pressure monitor

General notes

If a tyre pressure monitor is fitted, the vehicle's wheels have sensors fitted that monitor the tyre pressures in all four tyres. The tyre pressure monitor warns you if the pressure drops in one or more of the tyres. The tyre pressure monitor functions only if the corresponding sensors are fitted to all wheels.

Information on tyre pressures is shown on the multifunction display. After a few minutes of driving, the current tyre pressure of each tyre is shown on the Service menu of the multifunction display; see illustration (example).



For further information on displaying this message, refer to the "Checking the tyre pressure electronically" section (▷ page 382).

Important safety notes

It is the driver's responsibility to set the tyre pressure to the recommended cold tyre pressure suitable for the operating situation (▷ page 378). Note that the correct tyre pressure for the current operating situation must first be learnt by the tyre pressure monitor. If a substantial loss of pressure occurs, the warning threshold for the warning message is aligned to the learnt reference values. Restart the tyre pressure monitor after adjusting to the cold tyre pressure (▷ page 382). The current pressures are saved as new reference values. This ensures that a warning message appears only if the tyre pressure drops significantly.

The tyre pressure monitor does not warn you of an incorrectly set tyre pressure. Observe the notes on the recommended tyre pressure (▷ page 378).

The tyre pressure monitor is not able to warn you of a sudden loss of pressure, e.g. if the tyre is penetrated by a foreign object. In this event, bring the vehicle to a halt by braking carefully. Avoid abrupt steering manoeuvres.

The tyre pressure monitor has a yellow warning lamp on the instrument cluster for indicating a pressure loss or malfunction. Depending on how the warning lamp flashes or lights up, a tyre pressure that is too low or a malfunction in the tyre pressure monitor is indicated:

- if the warning lamp is lit continuously, the tyre pressure on one or more tyres is significantly too low, the tyre pressure monitor is not malfunctioning
- if the warning lamp flashes for approximately one minute and then remains lit constantly, the tyre pressure monitor is malfunctioning

In addition to the warning lamp, a message appears on the multifunction display. Observe the information on display messages (▷ page 287).

It may take up to ten minutes for a malfunction of the tyre pressure monitor to be indicated. A malfunction will be indicated by the tyre pressure warning lamp flashing for approximately one minute and then remaining lit. When the fault has been rectified, the tyre pressure warning lamp goes out after you have driven for a few minutes.

The tyre pressure values indicated by the on-board computer may differ from those measured at a filling station using a pressure gauge. The tyre pressures shown by the on-board computer refer to those measured at sea level. At high altitudes, the tyre pressure values indicated by a pressure gauge are higher than those shown by the on-board computer. In this case, do not reduce the tyre pressures.

The operation of the tyre pressure monitor can be affected by interference from radio transmitting equipment (e.g. cordless headphones, two-

way radios) that may be being operated in or near the vehicle.

Checking the tyre pressure electronically

- ▶ Make sure that the key is in position 2 (▷ page 153) in the ignition lock .
- ▶ Press ⌂ on the steering wheel to call up the menu list.
- ▶ Press ▲ or ▼ on the steering wheel to select the Service menu.
- ▶ Confirm by pressing OK on the steering wheel.
- ▶ Select Tyre pressure by pressing ▲ or ▼.
- ▶ Press OK to confirm.
  The multifunction display shows the current tyre pressure of each wheel.

If the vehicle was parked for longer than 20 minutes, the following message appears: Tyre pressures will be displayed after a few minutes of driving.

After a teach-in period, the tyre pressure monitor automatically detects new wheels or new sensors. As long as a clear allocation of the tyre pressure values to the individual wheels is not possible, the Tyre pressure monitor active message is shown instead of the tyre pressure display. The tyre pressures are already being monitored.

After an emergency spare wheel has been fitted, the system may still display the tyre pressure of the removed wheel for a few minutes. If this occurs, note that the value displayed for the position where the spare wheel is fitted is not the same as the current tyre pressure of the emergency spare wheel.

Warning messages of the tyre pressure monitor

If the tyre pressure monitor detects a pressure loss in one or more tyres, a warning message is shown on the multifunction display. The yellow tyre pressure warning lamp then lights up:

- If the Please correct tyre pressure message appears on the multifunction display, the tyre pressure in at least one tyre is too low. The tyre pressure must be corrected when the opportunity arises.
- If the Check tyre(s) message appears on the multifunction display, the tyre pressure in at least one tyre has dropped significantly. The tyres must be checked.
- If the Warning tyre defect message appears on the multifunction display, the tyre pressure in at least one tyre has dropped suddenly. The tyres must be checked.

Observe the instructions and safety notes in the display messages in the "Tyres" section (▷ page 287).

If the position of the wheels on the vehicle is changed, the tyre pressures may be displayed in the wrong positions for a short time. After a few minutes of driving, this is rectified and the tyre pressures are displayed in the correct positions.

Restarting the tyre pressure monitor

When you restart the tyre pressure monitor, all existing warning messages are deleted and the warning lamps go out. The monitor uses the currently set tyre pressures as the reference values for monitoring. In most cases, the tyre pressure monitor will automatically detect the new reference values after you have changed the tyre pressure. However, you can also set reference values manually as described here. The tyre pressure monitor then monitors the new tyre pressure values.

- ▶ Use the table on the inside of the fuel filler flap to ensure that the tyre pressure is set correctly in all four tyres for the current operating conditions.
  Also observe the notes in the section on tyre pressures (▷ page 378).
- ▶ Make sure that the key is in position 2 in the ignition lock (▷ page 153).
- ▶ Press ⌂ on the steering wheel to call up the menu list.
- ▶ Press ▲ or ▼ on the steering wheel to select the Service menu.
- ▶ Confirm by pressing OK on the steering wheel.
- ▶ Select Tyre pressure by pressing ▲ or ▼.
- ▶ Press OK to confirm.
  The multifunction display shows the current tyre pressure of each wheel or the Tyre

pressures will be displayed after a few minutes of driving message.

▶ Press button ▼.
The Use current pressures as new reference values message is shown on the multifunction display.

If you wish to confirm the restart:

▶ Press button OK.
The Tyre press. monitor restarted message is shown on the multifunction display.
After you have been driving for a few minutes, the system checks whether the current tyre pressures are within the specified range. The new tyre pressures are then accepted as reference values and monitored.

If you wish to cancel the restart:

▶ Press button ⮌.
The tyre pressure values stored at the last restart will continue to be monitored.

Radio type approval for the tyre pressure monitor

Country	Radio type approval number
Abu Dhabi, Dubai, United Arab Emirates	TRA REGISTERED NO: ER0099792/12. DEALER NO: DA0047074/10
Argentina	Schrader GG4 Numero de Registro CNC: H-12338
Brazil	see below
European Union	Hereby, Schrader Electronics Ltd., declares that this TPMS is in compliance with the essential requirements and other provisions of directive 1999/5/EC. The declaration of conformity may be consulted at emcteam@ schrader.co.uk
Jordan	Kingdom of Jordan Type approval for Tyre Pressure sensor. Manufacturer: Schrader Electronics Ltd. Model: GG4 Type Approval Number: TRC/LPD/2012/190 Model: MC34MA4 Type Approval Number: TRC/LPD/2011/158
Malaysia	RAQP/26A/0313S/S(13-0323)
Morocco	AGREE PAR L'ANRT MAROC Numero d'agrement: MR 10216 ANRT 2012 Date d'agrement: 23/11/2012
Mexico	IFT: RLVSCMR14-0815 IFT: RCPSCMR14-0621
Moldova	
Philippines	 NTC Type Approved. No: ESD-1306871C
Serbia	
Singapore	Complies with IDA Standards DA 103365

Country	Radio type approval number
South Africa	TA-2012/1540 Approved TA-2011/1370 Approved
Ukraine	028 Schrader Electronics цім стверджує, що обладнання Радіопередавач моделі GG4 системи контролю тиску в шині автомобіля відповідає вимогам Технічного регламенту радіообладнання і телекомунікаційного кінцевого (термінального) обладнання (Постанова КМУ № 679 від 24 червня 2009 р.) Декларація відповідності знаходиться на сайті Schrader Electronics та надається за запитом на електрону адресу emcteam@schrader.co.uk Schrader Electronics цім стверджує, що обладнання Радіопередавач моделі MC34MA4 системи контролю тиску в шині автомобіля відповідає вимогам Технічного регламенту радіообладнання і телекомунікаційного кінцевого (термінального) обладнання (Постанова КМУ № 679 від 24 червня 2009 р.) Декларація відповідності знаходиться на сайті Schrader Electronics та надається за запитом на електрону адресу emcteam@schrader.co.uk

Brazil



Este equipamento opera em caráter secundário, isto é, não tem direito à proteção contra interferência prejudicial, mesmo de estações do mesmo tipo, e não pode causar interferência a sistemas operando em caráter primário.

Changing a wheel

Flat tyre

You can find information on what to do in the event of a flat tyre in the "Breakdown assistance" section (▷ page 358). Information on driving with MOExtended tyres in the event of a flat tyre can be found under "Breakdown assistance" (▷ page 358).

Vehicles with an emergency spare wheel: in the event of a flat tyre, the emergency spare wheel is fitted according to the description under "Fitting a wheel" (▷ page 385).

Interchanging the wheels

⚠ WARNING

Interchanging the front and rear wheels may severely impair the driving characteristics if the wheels or tyres have different dimensions. The wheel brakes or suspension components may also be damaged. There is a risk of accident.

Interchange front and rear wheels only if the wheels and tyres are of the same dimensions.

! On vehicles fitted with a tyre pressure monitor, electronic components are located in the wheel.

Tyre-fitting tools should not be applied in the area of the valve, as this could damage the electronic components.

Only have tyres changed at a qualified specialist workshop.

Interchanging the front and rear wheels or tyres of differing dimensions can render the general operating permit invalid.

Observe the instructions and safety notes in the "Fitting a wheel" section (▷ page 385).

The wear patterns on the front and rear tyres differ depending on the operating conditions. Interchange the wheels before a clear wear pattern has formed on the tyres. Front tyres typically wear more on the shoulders, while rear tyres wear more in the centre.

On vehicles that have front and rear wheels of the same size, you can interchange the wheels every 5,000 to 10,000 km depending on the degree of tyre wear. Ensure the direction of rotation is maintained.

Clean the contact surfaces of the wheel and the brake disc thoroughly every time a wheel is interchanged. Check the tyre pressure and, if necessary, restart the tyre pressure loss warning system (▷ page 380) or the tyre pressure monitor (▷ page 382).

Direction of rotation

Tyres with a specified direction of rotation have additional benefits, e.g. if there is a risk of aquaplaning. These advantages can only be gained if the tyres are fitted corresponding to the direction of rotation.

An arrow on the sidewall of the tyre indicates its correct direction of rotation.

Storing wheels

Store wheels in a cool, dry and preferably dark place if they are not being used. Protect the tyres against oil, grease, petrol and diesel.

Fitting a wheel

Preparing the vehicle

- ▶ Stop the vehicle on solid, non-slippery and level ground.
- ▶ Apply the electric parking brake manually.
- ▶ Move the front wheels to the straight-ahead position.
- ▶ **Vehicles with manual transmission:** engage first gear or reverse gear R.
- ▶ **Vehicles with automatic transmission:** shift the transmission to position P.
- ▶ Make sure that the vehicle level is set to "Normal" on vehicles with AIRMATIC (▷ page 203).
- ▶ Switch off the engine.
- ▶ **Vehicles without KEYLESS-GO:** remove the key from the ignition lock.
- ▶ **Vehicles with KEYLESS-GO start-function or KEYLESS-GO:** open the driver's door. The vehicle electronics are now in position 0. This is the same as the key having been removed.
- ▶ **Vehicles with KEYLESS-GO start function or KEYLESS-GO:** remove the Start/Stop button from the ignition lock (▷ page 154).
- ▶ If included in the vehicle equipment, remove the tyre-change tool kit from the vehicle.
- ▶ Secure the vehicle against rolling away.

Apart from some country-specific variants, vehicles are not equipped with a tyre-change tool kit. Some tools for changing a wheel are specific to the vehicle. For more information on which tools are required to perform a wheel change on your vehicle, consult a qualified specialist workshop.

Necessary tyre-changing tools may include, for example:

- Jack
- Wheel chock
- Wheel wrench
- Centring pin

Securing the vehicle against rolling away

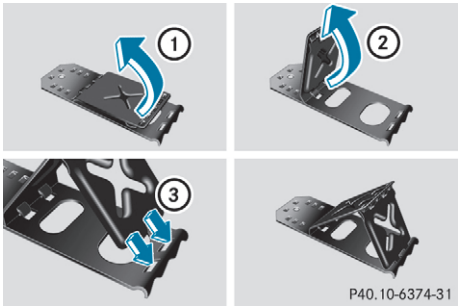

If your vehicle is equipped with a wheel chock, it can be found in the tyre-change tool kit (▷ page 357).

The folding wheel chock is an additional securing measure to secure the vehicle against rolling away, e.g. when changing a wheel.

▶ Fold both plates upwards ①.
▶ Fold out lower plate ②.
▶ Insert the lugs on the lower plate fully into the openings in base plate ③.


P40.10-6516-31

▶ Place chocks or other suitable items under the front and rear of the wheel that is diagonally opposite the wheel you wish to change.

Raising the vehicle

⚠ WARNING

If you do not position the jack correctly at the appropriate jacking point of the vehicle, the jack could tip over with the vehicle raised. There is a risk of injury.

Only position the jack at the appropriate jacking point of the vehicle. The base of the jack must be positioned vertically, directly under the jacking point of the vehicle.

Observe the following when raising the vehicle:

- only use the vehicle-specific jack that has been tested and approved by Mercedes-Benz to raise the vehicle. If the jack is used incorrectly, it could tip over while the vehicle is raised.
- the jack is designed only to raise the vehicle for a short time while a wheel is being changed. It is not permissible to use it to perform maintenance work under the vehicle.
- avoid changing the wheel on uphill and downhill slopes.
- before raising the vehicle, safeguard it from rolling away by applying the parking brake and positioning wheel chocks. Do not release the parking brake while the vehicle is raised.
- the jack must be placed on a firm, flat and non-slip surface. On a loose surface, a large, flat load-bearing underlay must be used. On a slippery surface, a non-slip underlay must be used, e.g. use a rubber mat on tiles.
- do not use wooden blocks or similar objects as a jack underlay. Otherwise, the jack will not be able to achieve its load-bearing capacity due to the restricted height.
- make sure that the distance between the underside of the tyre and the ground does not exceed 3 cm.
- do not place your hands or feet under the raised vehicle.
- do not lie under the raised vehicle.
- do not start the engine when the vehicle is raised.
- do not open or close a door or the tailgate when the vehicle is raised.
- make sure that no persons are present in the vehicle when raising the vehicle.

Vehicles with steel wheels and wheel trim: the wheel trim covers the wheel bolts. Before you can unscrew the wheel bolts, you must remove the wheel trim.

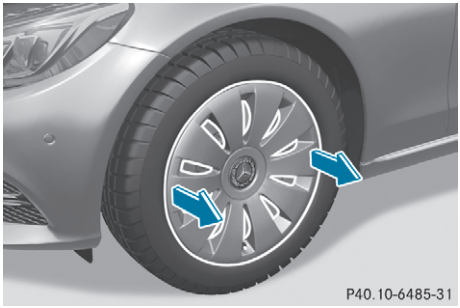
P40.10-6485-31

▶ Using both hands, carefully reach into two wheel trim openings and remove the wheel trim.

Vehicles with light-alloy wheels and hub cap: the wheel bolts are covered by a hub cap. Before you can unscrew the wheel bolts, you must remove the hub cap. Two different variants can be fitted.

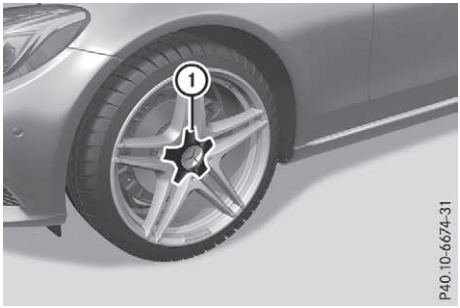

Vehicles with plastic hub cap:

- ▶ **To remove:** turn the centre cover of hub cap ① anti-clockwise and remove.
- ▶ **To fit:** before fitting, ensure that hub cap ① is in the open position. To do this, turn the centre cover anti-clockwise.
- ▶ Position hub cap ① and turn the centre cover clockwise until you feel and hear the hub cap ① engage.
- ▶ Make sure that hub cap ① is fitted securely.

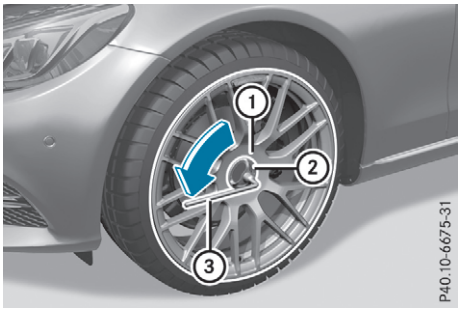

Vehicles with aluminium hub cap:

- ▶ **To remove:** take socket ② and wheel wrench ③ from the tyre-change tool kit (▷ page 357).
- ▶ Position socket ② on hub cap ①.
- ▶ Position wheel wrench ③ on socket ②.
- ▶ Using wheel wrench ③, turn hub cap ① anti-clockwise and remove.
- ▶ **To fit:** before fitting, check hub cap ① and wheel area for dirt, and clean if necessary.
- ▶ Position hub cap ① and turn until it is in the right position.
- ▶ Position socket ② on hub cap ①.
- ▶ Position wheel wrench ③ on socket ② and tighten hub cap ①.

  The tightening torque must be **25 Nm**.

ⓘ **Note** that the hub cap must be tightened to the specified torque of **25 Nm**. Mercedes-Benz recommends that you have the hub cap fitted at a qualified specialist workshop.

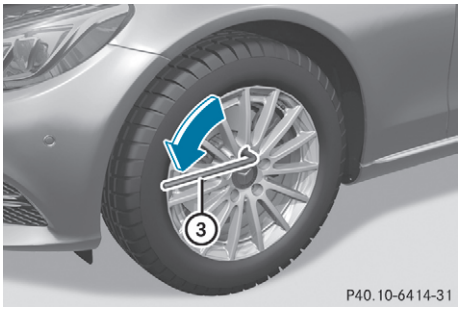

- ▶ Using wheel wrench ③, loosen the bolts on the wheel you wish to change by about one full turn. Do not unscrew the bolts completely.

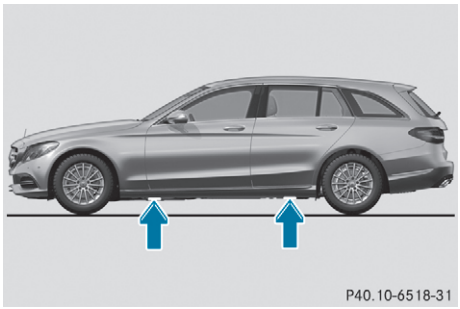

The jacking points are located just behind the front wheel arches and just in front of the rear wheel arches (arrows).

Mercedes-AMG vehicles and vehicles with AMG equipment: to protect the vehicle body, the vehicle has covers fitted next to the jacking points on the outer sills.

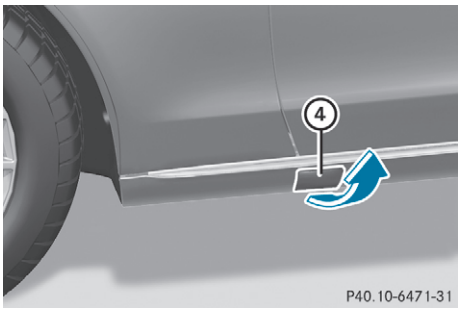

▶ **Mercedes-AMG vehicles and vehicles with AMG equipment:** fold cover ④ upwards.

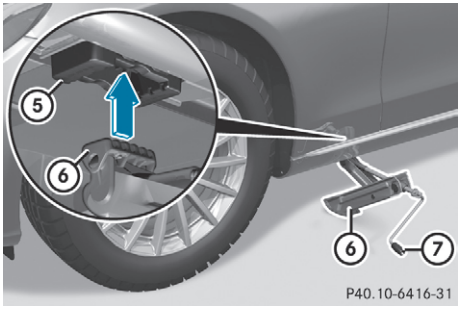

▶ Position jack ⑥ at jacking point ⑤.

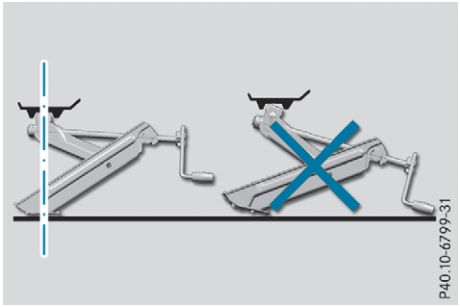

▶ Make sure that the base of the jack is positioned vertically under the jacking point.

▶ Turn crank ⑦ clockwise until jack ⑥ sits completely on jacking point ⑤. The base of the jack must lie evenly on the ground.

▶ Turn crank ⑦ until the tyre is raised a maximum of 3 cm off the ground.

Removing a wheel

! Mercedes AMG vehicles with ceramic-brake disc: during removal and repositioning of the wheel, the wheel rim can strike the ceramic-brake disc and damage it. Therefore, take precautions and have a second person assist you. Alternatively, you can use a second centring pin.

! Do not place wheel bolts in sand or dirt. The threads of the wheel bolts and wheel hubs could otherwise be damaged when the bolts are tightened.

When fitting/removing wheels, and for as long as the wheels are removed, avoid applying any external force on the brake discs. This could impair the level of comfort when braking.

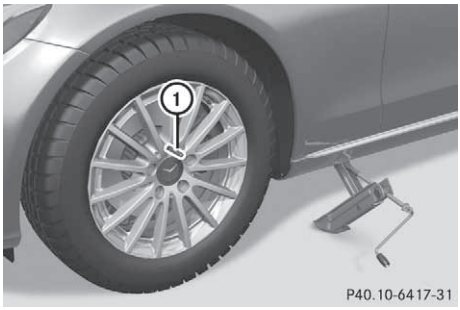

▶ Unscrew the uppermost wheel bolt completely.

▶ Screw centring pin ① into the thread instead of the wheel bolt.

▶ Unscrew the remaining wheel bolts fully.

▶ Remove the wheel.

Fitting a new wheel

⚠ WARNING

Oiled or greased wheel bolts or damaged wheel bolts/hub threads can cause the wheel bolts to come loose. As a result, you could lose a wheel while driving. There is a risk of accident.

Never oil or grease wheel bolts. In the event of damage to the threads, contact a qualified specialist workshop immediately. Have the damaged wheel bolts or hub threads replaced/renewed. Do not continue driving.

⚠ WARNING

If you tighten the wheel bolts or wheel nuts when the vehicle is raised, the jack could tip over. There is a risk of injury.

Only tighten the wheel bolts or wheel nuts when the vehicle is on the ground.

It is imperative to observe the instructions and safety notes on "Changing a wheel" (▷ page 384).

Only use wheel bolts that have been designed for the wheel and the vehicle. For safety reasons, Mercedes-Benz recommends that you use only wheel bolts which have been approved for

Mercedes-Benz vehicles and the respective wheel.

! **Mercedes AMG vehicles with ceramic-brake disc:** during removal and repositioning of the wheel, the wheel rim can strike the ceramic-brake disc and damage it. Therefore, take precautions and have a second person assist you. Alternatively, you can use a second centring pin.

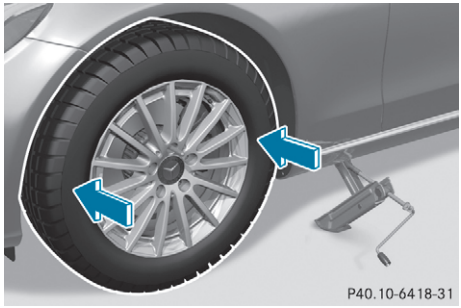
P40.10-6418-31

- ▶ Clean the wheel and wheel hub contact surfaces.
- ▶ Slide the wheel to be mounted onto the centring pin and push it on.
- ▶ Tighten the wheel bolts until they are finger-tight.
- ▶ Unscrew the centring pin.
- ▶ Tighten the last wheel bolt until it is finger-tight.
- ▶ **Vehicles with a collapsible emergency spare wheel:** inflate the collapsible emergency spare wheel (▷ page 391).

  Only then lower the vehicle.

Lowering the vehicle

⚠ **WARNING**

The wheels could work loose if the wheel nuts and bolts are not tightened to the specified tightening torque. There is a risk of accident.

Have the tightening torque immediately checked at a qualified specialist workshop after a wheel is changed.

! **Vehicles with a collapsible emergency spare wheel:** Inflate the collapsible emergency spare wheel using the tyre inflation compressor before lowering the vehicle. The rim could otherwise be damaged.

- ▶ Turn the crank of the jack anti-clockwise until the vehicle is once again standing firmly on the ground.
- ▶ Place the jack to one side.

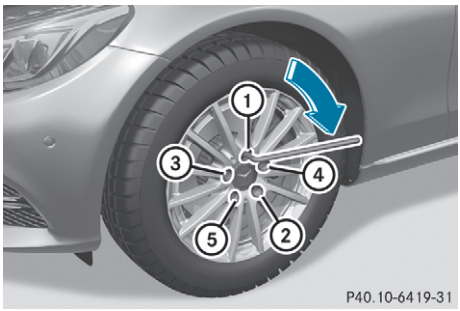

P40.10-6419-31

- ▶ Tighten the wheel bolts evenly in a crosswise pattern in the sequence indicated (① to ⑤). The tightening torque must be **150 Nm**.
- ▶ Turn the jack back to its initial position.
- ▶ Stow the jack and the rest of the tyre-change tool kit in the luggage compartment again.
- ▶ **Mercedes-AMG vehicles and vehicles with AMG equipment:** use the cover of the outer sill.
- ▶ Check the tyre pressure of the newly fitted wheel and adjust if necessary.

  Observe the recommended tyre pressures (▷ page 378).

If you are driving with the emergency spare wheel fitted, the tyre pressure loss warning system or the tyre pressure monitor cannot function reliably. Restart the tyre pressure loss warning system or tyre pressure monitor only once the defective wheel has been replaced with a new wheel.

Vehicles with tyre pressure monitor: all fitted wheels must be equipped with functioning sensors.

Wheel/tyre combination

You can ask for information regarding permitted wheel/tyre combinations at a Mercedes-Benz Service Centre.

! For safety reasons, Mercedes-Benz recommends that you only use tyres and wheels which have been approved by Mercedes-Benz specifically for your vehicle.

These are specially adapted to the control systems, such as ABS or ESP® and are marked as follows:

- MO = Mercedes-Benz Original
- MOE = Mercedes-Benz Original Extended (tyres featuring run-flat characteristics)
- MO1 = Mercedes-Benz Original (only certain AMG tyres)

Mercedes-Benz Original Extended tyres may only be used on wheels that have been specifically approved by Mercedes-Benz.

Only use tyres, wheels or accessories tested and approved by Mercedes-Benz. Certain characteristics, e.g. handling, vehicle noise emissions or fuel consumption, may otherwise be adversely affected. In addition, when driving with a load, tyre dimension variations could cause the tyres to come into contact with the bodywork and axle components. This could result in damage to the tyres or the vehicle.

Mercedes-Benz accepts no liability for damage resulting from the use of tyres, wheels or accessories other than those tested and approved.

Further information about wheels, tyres and approved combinations can be obtained from any qualified specialist workshop.

! Retreaded tyres are neither tested nor recommended by Mercedes-Benz, since previous damage cannot always be detected on retreaded tyres. As a result, Mercedes-Benz cannot guarantee vehicle safety if retreaded tyres are fitted. Do not fit used tyres if you have no information about their previous usage.

! Large wheels: the lower the section width for a certain wheel size, the lower the ride comfort is on poor road surfaces. Roll comfort and suspension comfort are reduced and the risk of damage to the wheels and tyres as a result of driving over obstacles increases.

The recommended tyre pressures for various operating conditions can be found on the tyre pressure table on the fuel filler flap. For further information on tyre pressure, see (▷ page 378). Check tyre pressures regularly and only when the tyres are cold.

Notes on the vehicle equipment – always fit the vehicle:

- with tyres of the same size across an axle (left/right)
- with the same type of tyres at a given time (summer tyres, winter tyres, MOExtended tyres)

  Exception: it is permissible to fit a different type or make in the event of a flat tyre. Observe the "MOExtended tyres (tyres with run-flat characteristics)" section (▷ page 358).

Vehicles with MOExtended tyres are not equipped with a TIREFIT kit at the factory. It is therefore recommended that you additionally equip your vehicle with a TIREFIT kit if you fit tyres that do not feature run-flat characteristics, e.g. winter tyres. A TIREFIT kit can be obtained from a qualified specialist workshop.

Emergency spare wheel

Important safety notes

⚠ WARNING

The wheel/tyre dimensions and the tyre type of the spare wheel/emergency spare wheel and the wheel to be replaced may differ. Fitting a spare wheel/emergency spare wheel may severely impair the driving characteristics. There is a risk of accident.

To prevent hazardous situations:

- Adapt your driving style accordingly and drive carefully.
- Never fit more than one spare wheel/emergency spare wheel if the dimensions are different to those of the wheel being replaced.
- Only use a spare wheel/emergency spare wheel briefly if the dimensions are different to those of the wheel being replaced.
- Do not switch off ESP®.
- Have the spare wheel/emergency spare wheel in question replaced at the nearest qualified specialist workshop. Make sure that the wheel/tyre dimensions and tyre type are correct.

When using an emergency spare wheel or spare wheel of a different size, you must not exceed the maximum speed of 80 km/h.

Snow chains must not be fitted to emergency spare wheels.

General notes

You can ask for information regarding permitted emergency spare wheels at a Mercedes-Benz Service Centre.

You should regularly check the pressure of all your tyres, including the emergency spare wheel, particularly prior to long trips, and correct the pressure as necessary (▷ page 378). The value on the wheel is valid.

An emergency spare wheel may also be fitted against the direction of rotation. Observe the time restriction on use as well as the speed limitation specified on the emergency spare wheel.

Replace the tyres after six years at the latest, regardless of wear. This also applies to the emergency spare wheel.

If you are driving with the emergency spare wheel fitted, the tyre pressure loss warning system or the tyre pressure monitor cannot function reliably. Restart the tyre pressure loss warning system or tyre pressure monitor only once the defective wheel has been replaced with a new wheel.

Vehicles with tyre pressure monitor: after an emergency spare wheel has been fitted, the system may still display the tyre pressure of the removed wheel for a few minutes. The value displayed for the position where the emergency spare wheel is fitted is not the same as the current tyre pressure of the emergency spare wheel.

Removing the emergency spare wheel

The emergency spare wheel is secured in the emergency spare wheel bag in the luggage compartment.

- ▶ Open the luggage compartment.
- ▶ Detach the securing straps.
- ▶ Unhook the spring hooks of the securing straps from the retainers.
- ▶ Remove the emergency spare wheel bag with the emergency spare wheel.
- ▶ Open the emergency spare wheel bag and remove the emergency spare wheel.

Always pay attention to the instructions and safety notes under "Changing a wheel" (▷ page 385).

Inflating the collapsible emergency spare wheel

! Inflate the collapsible emergency spare wheel using the tyre inflation compressor before lowering the vehicle. The wheel rim could otherwise be damaged.

! Do not operate the tyre inflation compressor for longer than eight minutes at a time without a break. It may otherwise overheat.

The tyre inflation compressor can be operated again once it has cooled down.

Comply with the manufacturer's safety instructions on the tyre inflation compressor label and on the tyre sealant bottle.

- ▶ Mount the collapsible emergency spare wheel as described (▷ page 384).

  The collapsible emergency spare wheel must be mounted before it is inflated.
- ▶ Remove the tyre inflation compressor from the stowage space under the luggage compartment floor (▷ page 357).

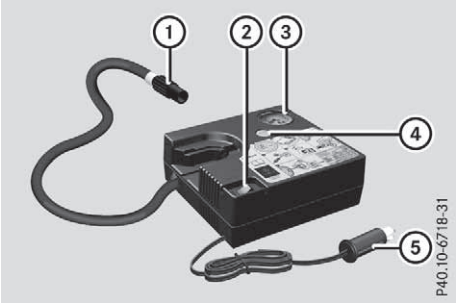

- ▶ Pull plug ⑤ and the filler hose out of the housing.
- ▶ Remove the cap from the valve on the collapsible emergency spare wheel.
- ▶ Screw union nut ① on the filler hose onto the valve.

If necessary, unscrew the plug-type connection from the union nut beforehand.

- ▶ Make sure that the tyre inflation compressor switch ② is set to **0**.
- ▶ Insert connector ⑤ into a socket in your vehicle.

  Cigarette lighter socket: (▷ page 334)

  12 V socket: (▷ page 335)

  Observe the notes on the cigarette lighter (▷ page 334). Observe the notes on sockets (▷ page 335).
- ▶ Turn the key to position 1 in the ignition lock.
- ▶ Press the tyre inflation compressor switch ② to **I**.

  The tyre inflation compressor is switched on. The tyre is inflated. The tyre pressure is shown on pressure gauge ③.
- ▶ Pump the tyre to the specified tyre pressure.

  The specified tyre pressure is printed on the yellow label of the emergency spare wheel.
- ▶ When the specified tyre pressure has been reached, press the switch ② on the electric air pump to **0**.

  The tyre inflation compressor is switched off.
- ▶ Turn the key to position 0 in the ignition lock.
- ▶ If the tyre pressure is higher than the specified pressure, press pressure release valve button ④ until the correct tyre pressure has been reached.
- ▶ Unscrew union nut ① on the filler hose from the valve.

  If necessary, screw the plug-type connection back onto the union nut.
- ▶ Screw the valve cap onto the collapsible emergency spare wheel valve again.
- ▶ Stow plug ⑤ and the filler hose in the lower section of the compressor housing.
- ▶ Stow the tyre inflation compressor in the vehicle.

Information on technical data

Hybrid vehicles: be sure to observe the notes in the supplement. Otherwise, you may fail to recognise dangers.

ⓘ The technical data were determined in accordance with EU Directives. All data apply to the vehicle's standard equipment. The data may therefore differ for vehicles with optional equipment. You can obtain further information from a Mercedes-Benz Service Centre.

Vehicle electronics

Tampering with the engine electronics

! Only have work carried out on the engine electronics and its associated parts, such as control units, sensors, actuating components and connector leads, at a qualified specialist workshop. Vehicle components may otherwise wear more quickly and the vehicle's operating permit may be invalidated.

Fitting two-way radios and mobile phones

⚠ **WARNING**

The electromagnetic radiation from two-way radios can interfere with the vehicle electronics if they are manipulated or retrofitted incorrectly. This could jeopardise the operating safety of the vehicle. There is a risk of an accident.

You should have all work on electrical and electronic components carried out at a qualified specialist workshop.

⚠ **WARNING**

If you operate two-way radios incorrectly in the vehicle, their electromagnetic radiation can interfere with the vehicle electronics, for example if:

- the two-way radio is not connected to an exterior aerial
- the exterior aerial is not correctly mounted or is not low-reflection

This could jeopardise the operating safety of the vehicle. There is a risk of an accident.

Have the low-reflection exterior aerial fitted at a qualified specialist workshop. When operating two-way radios in the vehicle, always connect them to the low-reflection exterior aerial.

! The operating permit may be invalidated if the instructions for installation and use of two-way radios are not observed.

In particular, the following conditions must be complied with:

- only approved wavebands may be used
- observe the maximum permissible output in these wavebands
- only approved aerial positions may be used

Excessive levels of electromagnetic radiation may cause damage to your health and to the health of others. The use of an exterior aerial takes into consideration the scientific discussion surrounding the possible health risk posed by electromagnetic fields.

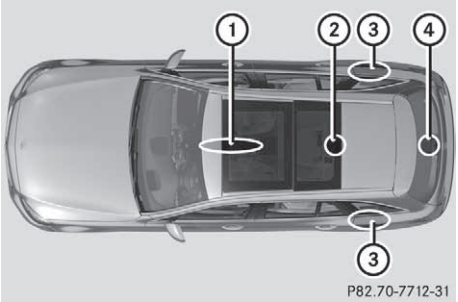

Approved aerial positions

① Front roof area
② Rear roof area

③ Rear wings
④ Tailgate

Vehicles with a panorama sliding sunroof: fitting an aerial to the front or rear roof area is not permitted.

On the rear wings, it is recommended that you position the aerial on the side of the vehicle closest to the centre of the road.

Use Technical Specification ISO/TS 21609 (Road Vehicles – "EMC guidelines for installation of aftermarket radio frequency transmitting equipment") when retrofitting two-way radios. Comply with the legal requirements for add-on parts.

If your vehicle has fittings for two-way radio equipment, use the power supply or aerial connections intended for use with the basic fittings. Be sure to observe the manufacturer's additional instructions when installing.

Deviations in respect of wavebands, maximum transmission outputs or aerial positions must be approved by Mercedes-Benz.

The maximum transmission output (PEAK) at the base of the aerial must not exceed the following values:

Waveband	Maximum transmission output
Short wave 3–54 MHz	100 W
4 m waveband 74 - 88 MHz	30 W
2 m waveband 144–174 MHz	50 W
Trunked radio/Tetra 380–460 MHz	10 W
70 cm waveband 400–460 MHz	35 W
Mobile communications (2G/3G/4G)	10 W

The following can be used in the vehicle without restrictions:

- two-way radios with a maximum transmission output of up to 100 mW
- two-way radios with transmitter frequencies in the 380 - 410 MHz waveband and a maximum transmission output of up to 2 W (trunked radio/Tetra)
- mobile phones (2G/3G/4G)

There are no restrictions when positioning the aerial on the outside of the vehicle for the following wavebands:

- trunked radio/Tetra
- 70 cm waveband
- 2G/3G/4G

Identification plates

Vehicle identification plate with vehicle identification number (VIN)

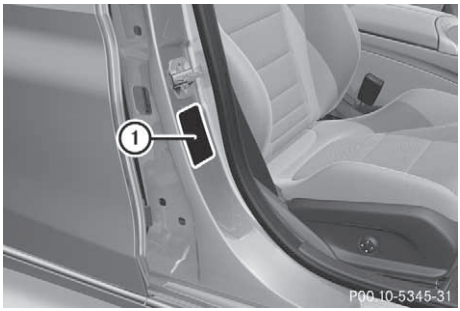

▶ Open the front right-hand door.
You will see the vehicle identification plate ①.

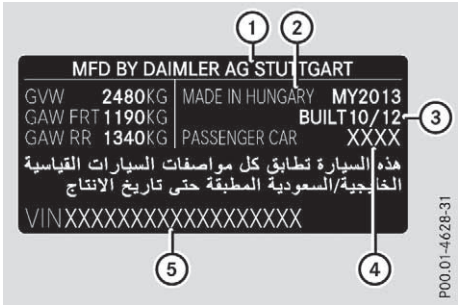

Example: vehicle identification plate (Kuwait)

① Vehicle manufacturer

② Place of manufacture
③ Date of manufacture
④ Vehicle model
⑤ VIN

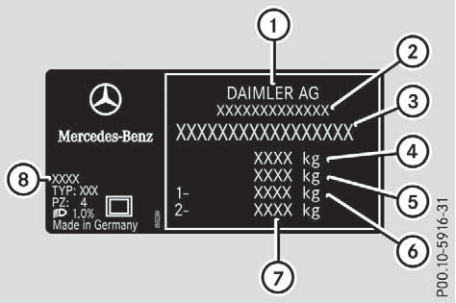

Example: vehicle identification plate (vehicles with a trailer tow hitch – all other countries)

① Vehicle manufacturer
② EU type approval number (for certain countries only)
③ VIN
④ Maximum gross vehicle weight (kg)
⑤ Maximum gross weight of vehicle combination (kg) (for certain countries only)
⑥ Permissible front axle load (kg)
⑦ Permissible rear axle load (kg)
⑧ Paint code

ⓘ The data shown on the vehicle identification plate are sample data. This data are different for every vehicle and may differ from the data shown here. You can find the data applicable to your vehicle on the vehicle's identification plate.

Vehicle identification number (VIN)

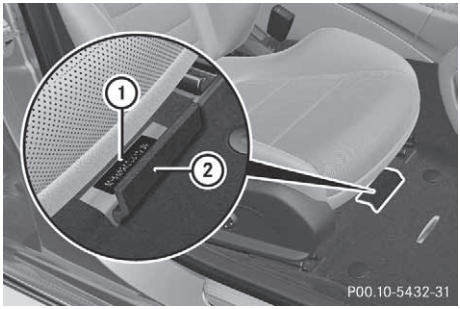

▶ Slide the right-hand front seat to its rearmost position.
▶ Fold floor covering ② upwards. VIN ① is visible.

The VIN can also be found on the vehicle identification plate (▷ page 394).

For certain countries only: the VIN can also be found at the lower edge of the windscreen.

Engine number

The engine number is stamped into the crankcase. You can obtain further information from any qualified specialist workshop.

Service products and capacities

Important safety notes

⚠ WARNING

Service product can be poisonous and hazardous to health. There is a risk of injury.

Observe the instructions on the respective original container when using, storing and disposing off service products. Always store service products in the sealed original container. Always keep service products out of the reach of children.

Environmental note

Dispose of service products in an environmentally-responsible manner.

Service products include the following:

- fuels
- exhaust gas aftertreatment additives, e.g. AdBlue®
- lubricants (e.g. engine oil, transmission oil)
- coolant
- brake fluid
- windscreen washer fluid
- climate control system refrigerant

Components and service products must be matched. Use only products recommended by Mercedes-Benz. Damage caused by the use of products that have not been recommended is not covered by the Mercedes-Benz warranty or goodwill gestures. They are listed in this

Mercedes-Benz Owner's Manual in the appropriate section.

You can identify service products approved by Mercedes-Benz by the following inscriptions on the container:

- MB-Freigabe (e.g. MB-Freigabe 229.51)
- MB-Approval (e.g. MB-Approval 229.51)

Other designations or recommendations indicate a level of quality or a specification in accordance with an MB Sheet Number (e.g. MB 229.5). They have not necessarily been approved by Mercedes-Benz.

Other designations, for example:

- 0W-30
- 5W-30
- 5W-40

You can obtain further information at any qualified specialist workshop or on the internet at http://bevo.mercedes-benz.com.

Fuel

Important safety notes

⚠ WARNING

Fuel is highly flammable. If you handle fuel incorrectly, there is a risk of fire and explosion.

You must avoid fire, naked flames, creating sparks and smoking. Switch off the engine and, if applicable, the auxiliary heating before refuelling.

⚠ WARNING

Fuels are poisonous and hazardous to health. There is a danger of injury.

Do not swallow fuel or let it come into contact with skin, eyes or clothing. Do not inhale fuel vapours. Keep fuels out of the reach of children.

If you or others come into contact with fuel, observe the following:

- Wash the fuel off any affected areas of skin with water and soap immediately.
- If you get fuel in your eyes, rinse them thoroughly with clean water immediately. Seek immediate medical attention.
- If fuel is swallowed, seek immediate medical attention. Do not induce vomiting.
- Change any clothing that has come into contact with fuel immediately.

Tank capacity

The total capacity of the fuel tank may vary, depending on the vehicle equipment.

Model	Total capacity
C 180 **C 180 d** **C 200** **C 200 4MATIC** **C 200 d** **C 220 d** **C 220 d 4MATIC**	41.0 l or 66.0 l
C 250 **C 250 d** **C 250 d 4MATIC**	50.0 l or 66.0 l
All other models	66.0 l

Model	Of which reserve fuel
Mercedes-AMG C 63 **Mercedes-AMG C 63 S**	Approx. 10.0 l
All other models	Approx. 7.0 l

Petrol

Fuel grade

! Do not use diesel to refuel vehicles with a petrol engine. Do not switch on the ignition if you accidentally refuel with the wrong fuel. Otherwise, the fuel will enter the fuel system. Even small amounts of the wrong fuel can result in damage to the fuel system and the

engine. Notify a qualified specialist workshop and have the fuel tank and fuel lines drained completely.

! Only refuel using unleaded petrol with at least 95 RON, which conforms to the European standard EN 228 or E DIN or an equivalent specification.

Fuel of this specification may contain up to 10% ethanol. Your vehicle is suitable for use with E10 fuel. You may refuel your vehicle using E10 fuel.

Fuel that does not conform to EN 228 can lead to increased wear as well as damage to the fuel system, engine and exhaust system.

! Only use the fuel recommended. Operating the vehicle with other fuels can lead to damage to the fuel system, engine and exhaust system.

! Do not use the following:

- petrol with more than 10% ethanol
- E100 (100% ethanol)
- petrol with methanol
- M100 (100% methanol)
- petrol with additives containing metal
- diesel

Do not mix such fuels with the fuel recommended for your vehicle.

You will usually find information about the fuel grade on the fuel pump. If you cannot find the label on the fuel pump, ask the filling station staff.

C 180, C 250: as a temporary measure, if the recommended fuel is not available, you may also use regular unleaded petrol with an octane rating of 93 RON.

All other models: as a temporary measure, if the recommended fuel is not available, you may also use regular unleaded petrol with an octane rating of 91 RON. This may reduce engine performance and increase fuel consumption. Avoid driving at full throttle and accelerating vigorously. Never refuel using petrol with a lower RON.

i In some countries, the petrol available may not be sufficiently low in sulphur. This fuel can temporarily produce unpleasant odours, especially on short journeys. As soon as sulphur-free fuel (sulphur content < 10 ppm) is used for refuelling, the odours subside.

The fuels you can use in your vehicle may differ from the information in the Owner's Manual depending on the country. The fuels that have been approved for your vehicle can be found on the instruction label on the inside of the fuel filler flap.

Information on refuelling (▷ page 175).

Mercedes-AMG vehicles

! Only refuel using super unleaded petrol with at least 98 ROZ, that conforms to European standard EN 228 or an equivalent specification.

You can otherwise impair engine output or damage the engine.

Fuel of this specification may contain up to 10% ethanol. Your vehicle is suitable for use with E10 fuel. You may refuel your vehicle using E10 fuel.

! As a temporary measure, if the recommended fuel is not available, you may also use unleaded petrol with an octane rating of 95 RON. This may reduce engine performance and increase fuel consumption. As much as possible, avoid driving at full throttle.

! As a temporary measure, if the recommended fuel is not available, you may also use unleaded petrol in emergencies with an octane rating of 91 RON.

Doing so results in noticeably higher fuel consumption, and the engine power output is noticeably reduced. Avoid driving at full throttle.

If no fuel other than petrol with 91 RON or a lower grade is available, you should have the vehicle adapted to run on this fuel at a qualified specialist workshop.

C 200, C 250

! Only refuel using sulphur-free unleaded petrol with at least 95 ROZ, that conforms to the European standard EN 228 or E DIN or an equivalent specification.

You could otherwise impair engine output or damage the emission control system.

i The petrol available in some countries may not be sufficiently low in sulphur. This fuel can temporarily produce unpleasant odours, especially on short journeys. As soon as sulphur-free fuel (sulphur content < 10 ppm) is used for refuelling, the odours are reduced.

C 300, Mercedes-AMG C 43 4MATIC

! Only refuel using super unleaded petrol with at least 98 ROZ, if you want maximum performance from the engine. Alternatively, you can also use unleaded petrol of at least 95 ROZ.

As a temporary measure, if the recommended fuel is not available, you may also use regular unleaded petrol with an octane rating of 91 ROZ. Doing so results in higher fuel consumption and significantly reduced performance. Never refuel using fuel with a lower RON.

Fuel of this specification may contain up to 10% ethanol.

Fuel that does not conform to EN 228 or E DIN 51626-1 can lead to increased wear as well as damage to the engine and exhaust system.

Additives

! Operating the engine with fuel additives added later can lead to engine failure. Do not mix fuel additives with fuel. This does not include additives for the removal and prevention of residue build-up. Petrol must only be mixed with additives recommended by Mercedes-Benz. Observe the instructions for use in the product description. More information about recommended additives can be obtained from any Mercedes-Benz Service Centre.

Mercedes-Benz recommends that you use fuel brands that have additives.

The quality of the fuel available in some countries may not be sufficient. Residue could build up in the fuel injection system as a result. In this case, in consultation with a Mercedes-Benz Service Centre, the fuel should be mixed with the cleaning additive recommended by Mercedes-Benz. Always observe the notes and mixing ratios specified on the container.

Diesel

Fuel grade

⚠ **WARNING**

If you mix diesel fuel with petrol, the flash point of this fuel mixture is lower than that of pure diesel fuel. When the engine is running, components in the exhaust system may overheat unnoticed. There is a risk of fire.

Never refuel with petrol. Never add petrol to diesel fuel.

! When refuelling, only use diesel fuel that conforms to the European standard EN 590 or is of equivalent quality. Fuel that does not conform to EN 590 can lead to increased wear as well as damage to the engine and exhaust system.

! Do not use the following:

- marine diesel
- heating oil
- bio-diesel
- vegetable oil
- petrol
- paraffin
- kerosene

Do not mix such fuels with diesel fuel and do not use any special additives. Otherwise, engine damage may occur.

! In countries outside the EU, only use low-sulphur Euro diesel with a sulphur content of under 50 ppm. Otherwise, the emission control system could be damaged.

You will usually find information about the fuel quality on the pump. If you cannot find the label on the fuel pump, ask the filling station staff.

Information on refuelling (▷ page 175).

Low outside temperatures

In winter months, diesel fuel with an improved cold flow quality is available. In Europe, the EN 590 standard defines various climate-dependent temperature categories. Malfunctions can be avoided by refuelling with diesel fuel that corresponds to the climatic specifications outlined in EN 590. At unusually low outside temperatures, it is possible that the flow characteristics of the diesel fuel could be insufficient. Accordingly, diesel fuel from warmer areas may not be suitable for operation in colder climatic conditions.

ⓘ Further information on country-specific fuel properties and fuel types with low-temperature resistance can be obtained from oil companies, e.g. at filling stations.

AdBlue®

Important safety notes

Comply with the important safety notes for service products when handling AdBlue® (▷ page 395).

AdBlue® is a water-soluble fluid for the exhaust gas aftertreatment of diesel engines. It is:

- non-toxic
- colourless and odourless
- non-flammable

If you open the AdBlue® tank, small amounts of ammonia vapour may be released.

Ammonia vapours have a pungent odour and are particularly irritating to the skin, mucous membranes and eyes. You may experience a burning sensation in your eyes, nose and throat. You may also experience coughing and watery eyes.

Do not inhale any ammonia vapours that may be released. Fill the AdBlue® tank only in well-ventilated areas.

Low outside temperatures

AdBlue® freezes at a temperature of approximately -11 °C. The vehicle is delivered from the factory equipped with an AdBlue® preheating system. Winter operation can thus be guaranteed even at temperatures below -11 °C.

Additives

! Only use AdBlue® in accordance with ISO 22241. Do not use additives with AdBlue® and do not dilute AdBlue® with water. This may destroy the BlueTEC exhaust gas aftertreatment system.

Purity

! Impurities in AdBlue® (e.g. due to other service products, cleaning agents or dust) lead to:

- increased emission values
- damage to the catalytic converter
- engine damage
- malfunctions in the BlueTEC® exhaust gas aftertreatment system

Assuring the purity of AdBlue® is particularly important with regard to avoiding malfunctions in the BlueTEC exhaust gas aftertreatment system.

If AdBlue® is pumped out of the AdBlue® tank, e.g. during repair work, do not use this fluid to refill the tank. The purity of the fluid can no longer be guaranteed.

Filling capacities

The total capacity of the AdBlue® tank may vary, depending on the vehicle equipment.

Model	Total capacity
All models	8.5 l or 25.0 l

Engine oil

General notes



When handling engine oil, observe the important safety notes on service products (▷ page 395).

The quality of the engine oil is decisive for the function and service life of an engine. After extensive tests, Mercedes-Benz approves engine oils that correspond to the current technical standard.

Therefore, only Mercedes-Benz-approved engine oils may be used in Mercedes-Benz engines.

Further information on tested and approved engine oils can be obtained from any Mercedes-Benz Service Centre. Mercedes-Benz recommends that you have the oil change carried out at a qualified specialist workshop. Mercedes-Benz approval is indicated on the oil container by the inscription "MB-Freigabe" or "MB-

Approval" and the corresponding designation, e.g. MB-Freigabe or MB-Approval 229.51.

You can find an overview of approved engine oils on the internet at http://bevo.mercedes-benz.com by entering the designation, e.g. 229.5.

The table shows which engine oils have been approved for your vehicle.

Petrol engines: for certain countries, different engine oils can be used, provided that the maintenance intervals are reduced. For more information, please contact a qualified specialist workshop.

Petrol engines	MB-Freigabe or MB-Approval
All models	229.5, 229.6

Diesel engines	MB-Freigabe or MB-Approval
C 180 d C 200 d (205.237)	226.51, 229.31, 229.51, 229.52
All other models	228.51, 229.31, 229.51, 229.52

Use only SAE 0W-40 or SAE 5W-40 engine oils for Mercedes-AMG vehicles.

ⓘ If the engine oils listed on the table are not available, you may top up with the following engine oils until the next oil change:

- Petrol engines: MB-Freigabe or MB-Approval 229.3 or ACEA A3/B3
- Diesel engines: MB-Freigabe or MB-Approval 229.3, 229.5 or ACEA C3

It may be used only once and the topping-up quantity must not exceed 1.0 l.

Filling capacities

The following values refer to an oil change, including the oil filter.

You can find the correct values for your model with the help of the VIN on the vehicle identification plate (▷ page 394).

Model	Replacement amount
C 200 d (205.207) C 220 d C 220 d 4MATIC C 250 d C 250 d 4MATIC	6.0 l
C 180 d C 200 d (205.237) C 200 4MATIC C 400 4MATIC Mercedes-AMG C 43 4MATIC	6.5 l
Mercedes-AMG C 63 Mercedes-AMG C 63 S	9.0 l
All other models	7.0 l

Additives

❗ Do not use any additives with the engine oil. This could damage the engine.

Brake fluid

⚠ **WARNING**

The brake fluid continuously absorbs moisture from the air. This results in the boiling point of the brake fluid lowering. If the boiling point of the brake fluid is too low, vapour pockets may form when the brakes are subjected to a heavy load. This would impair braking efficiency. There is a risk of an accident.

Have the brake fluid renewed at the prescribed intervals.

When handling brake fluid, observe the important safety notes on service products (▷ page 395).

The brake fluid change intervals can be found in the Service Booklet.

Only use brake fluid approved by Mercedes-Benz in accordance with MB-Freigabe or MB-Approval 331.0.

Information about approved brake fluid can be obtained at any qualified specialist workshop or on the Internet at http://bevo.mercedes-benz.com.

ⓘ Have the brake fluid regularly replaced at a qualified specialist workshop in accordance with the replacement intervals and the replacement confirmed in the Service Booklet.

Coolant

Important safety notes

⚠ **WARNING**

If antifreeze comes into contact with hot components in the engine compartment, it may ignite. There is a risk of fire and injury.

Let the engine cool down before you top up the antifreeze. Make sure that antifreeze is not spilled next to the filler neck. Thoroughly clean the antifreeze from components before starting the engine.

! Only add coolant that has been premixed with the desired antifreeze protection. You could otherwise damage the engine.

Further information on coolants can be found in the Mercedes-Benz Specifications for Service Products, MB Specifications for Service Products 310.1, e.g. on the Internet at http://bevo.mercedes-benz.com. Or contact a qualified specialist workshop.

! Always use a suitable coolant mixture, even in countries where high temperatures prevail.

Otherwise, the engine cooling system is not sufficiently protected from corrosion and overheating.

ⓘ Have the coolant regularly replaced at a qualified specialist workshop and the replacement confirmed in the Service Booklet.

Comply with the important safety precautions for service products when handling coolant (▷ page 395).

The coolant is a mixture of water and antifreeze/anti-corrosion additive. It is responsible for the following:

- anti-corrosion protection
- antifreeze protection
- raising the boiling point

If antifreeze/anti-corrosion additive is present at the correct concentration, the boiling point of the coolant during operation will be approximately 130 °C.

The antifreeze concentrate/anti-corrosion additive concentration in the engine cooling system should:

- Be at least 50%. This will protect the engine cooling system against freezing down to approximately -37 °C.
- Not exceed 55% (antifreeze protection down to -45 °C). Heat will otherwise not be dissipated as effectively.

Mercedes-Benz recommends an antifreeze/anti-corrosion additive concentration in accordance with MB Specifications for Service Products 310.1.

ⓘ When the vehicle is first delivered, it is filled with a coolant mixture that ensures adequate antifreeze and corrosion protection.

ⓘ The coolant is checked at every maintenance interval at a qualified specialist workshop.

Windscreen washer system

Important safety notes

⚠ **WARNING**

If windscreen washer concentrate comes into contact with hot components of the engine or the exhaust system, it can ignite. There is a risk of fire and injury.

Make sure the windscreen washer concentrate does not come into contact with the filler neck.

! Only use washer fluid that is suitable for plastic lamp lenses, e.g. MB SummerFit or MB WinterFit. Unsuitable washer fluid could damage the plastic lenses of the headlamps.

! Only the washer fluids SummerFit and WinterFit can be mixed. Otherwise, the spraying nozzles could become blocked.

Do not use distilled or de-ionised water, otherwise the level sensor may give a false reading.

When handling washer fluid, observe the important safety notes on service products (▷ page 395).

At temperatures above freezing:

▶ Fill the washer fluid reservoir with a mixture of water and washer fluid, e.g. MB SummerFit.

Mix 1 part MB SummerFit to 100 parts water.

At temperatures below freezing:

▶ Fill the washer fluid reservoir with a mixture of water and washer fluid, e.g. MB WinterFit.

For the correct mixing ratio, refer to the information on the antifreeze reservoir.

i Add washer fluid concentrate, e.g. MB SummerFit or MB WinterFit, to the washer fluid all year round.

Vehicle data

General notes

Please note that for the specified vehicle data:

- the heights specified may vary as a result of:
  - tyres
  - load
  - condition of the suspension
  - optional equipment
- optional equipment reduces the payload
- vehicle-specific weight information can be found on the vehicle identification plate (▷ page 394)
- for certain countries only: you can find vehicle-specific data in the COC documents (CERTIFICATE OF CONFORMITY), these documents are delivered with your vehicle.

Dimensions and weights

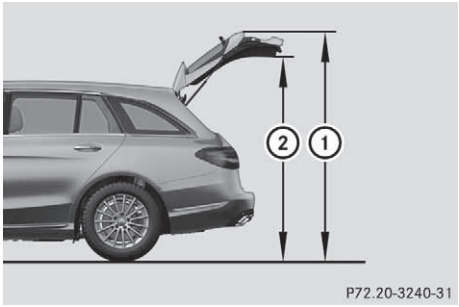

Missing values were not available at the time of going to print.

Model	① Height when opened	② Maximum headroom
C 200 4MATIC C 220 d 4MATIC C 250 d 4MATIC C 400 4MATIC	2001 mm	1883 mm
C 300	1994 mm	1876 mm
Mercedes-AMG C 43 4MATIC	1976 mm	1858 mm
Mercedes AMG C 63 Mercedes AMG C 63 S	1975 mm	
All other models	1989 mm	1871 mm

You can find the correct values for your model with the help of the VIN on the vehicle identification plate (▷ page 394).

Mercedes-AMG C 43 4MATIC	
Vehicle length	4717 mm
Vehicle width including exterior mirrors	2020 mm

Mercedes-AMG C 43 4MATIC	
Vehicle width excluding exterior mirrors	1810 mm
Vehicle height	1440 mm
Wheelbase	2840 mm
Maximum roof load	75 kg

Mercedes AMG C 63 Mercedes AMG C 63 S	
Vehicle length	4771 mm
Vehicle width including exterior mirrors	2020 mm
Vehicle width excluding exterior mirrors	1839 mm
Vehicle height	1441 mm
Wheelbase	2840 mm
Maximum roof load	75 kg

All other models	
Vehicle length	4702 mm
Vehicle width including exterior mirrors	2020 mm
Vehicle width excluding exterior mirrors	1810 mm
Wheelbase	2840 mm
Maximum roof load	75 kg

Model	Vehicle height
C 200 4MATIC C 220 d 4MATIC C 250 d 4MATIC C 400 4MATIC	1467 mm
C 300	1462 mm
All other models	1457 mm

Trailer tow hitch

Trailer loads

Permissible trailer load, braked (at a minimum gradient-climbing capability of 12% from a standstill)

Not all models can tow a trailer. Further information (▷ page 235).

You can find the correct values for your model with the help of the VIN on the vehicle identification plate (▷ page 394).

Model	Manual transmission	Automatic transmission
C 160	1400 kg	1800 kg
C 180 C 200	1600 kg	1800 kg
C 180 d C 200 d (205.237)	1600 kg	1600 kg
C 220 d	1800 kg	1800 kg
All other models	1800 kg	1800 kg

Permissible trailer load, unbraked

Not all models can tow a trailer. Further information (▷ page 235).

You can find the correct values for your model with the help of the VIN on the vehicle identification plate (▷ page 394).

Missing values were not available at the time of going to print.

Model	Manual transmission	Automatic transmission
C 160 C 180	735 kg	750 kg
C 200	745 kg	750 kg
All other models	750 kg	750 kg

Maximum drawbar load

! Use a drawbar noseweight as close as possible to the maximum permissible noseweight. Do not use a noseweight of less than 50kg, otherwise the trailer may come loose.

Note that the payload and the rear axle load are reduced by the actual payload.

Not all models can tow a trailer. Further information (▷ page 235).

The drawbar load reduces the permissible overall load and rear axle load.

The drawbar load acts from above onto the ball head on the trailer tow hitch.

You can find the correct values for your model with the help of the VIN on the vehicle identification plate (▷ page 394).

The drawbar load is not included in the trailer load.

Model	
All models	75 kg

You can attach carrier systems, e.g. bicycle racks or load-bearing devices, to the ball coupling. The maximum payload of 75 kg applies when carrier systems are attached to the ball coupling.

Permissible rear axle load when towing a trailer

Not all models can tow a trailer. Further information (▷ page 235).

You can find the correct values for your model with the help of the VIN on the vehicle identification plate (▷ page 394).

Model	Manual transmission	Automatic transmission
C 160 C 180	1230 kg	1245 kg
C 180 d	1245 kg	1245 kg
C 200	1235 kg	1240 kg
C 200 4MATIC	–	1260 kg
C 200 d (205.207)	–	1265 kg
C 200 d (205.237)	1240 kg	1245 kg
C 220 d	1260 kg	1265 kg
C 220 d 4MATIC	–	1270 kg
C 250	–	1260 kg
C 250 d	–	1295 kg
C 250 d 4MATIC	–	1285 kg
C 300	–	1300 kg
C 400 4MATIC	–	1300 kg
Mercedes-AMG C 43 4MATIC	–	1325 kg

Publication details

Internet

Further information about Mercedes-Benz vehicles and about Daimler AG can be found on the following websites:

http://www.mercedes-benz.com

http://www.daimler.com

Editorial office

You are welcome to forward any queries or suggestions you may have regarding this Owner's Manual to the technical documentation team at the following address:

Daimler AG, HPC: CAC, Customer Service, 70546 Stuttgart, Germany

©Daimler AG: not to be reprinted, translated or otherwise reproduced, in whole or in part, without written permission from Daimler AG.

Vehicle manufacturer

Daimler AG
Mercedesstraße 137
70327 Stuttgart
Germany

As at 03.11.2016

Your Owner's Manuals

Digital - in the vehicle
Familiarise yourself with the contents of the Owner's Manual directly via the vehicle's multimedia system (Menu item "Vehicle").

Printed manual - in the vehicle
In addition to the vehicle's Owner's Manual, you can obtain the complete multimedia system Supplement from your Mercedes-Benz Service Centre.

Digital - on the Internet
You can find the Owner's Manual on the Mercedes-Benz homepage.

Digital - as an App
The Mercedes-Benz Guides App is available for free on the Apple® App store or Google Play.

Apple® iOS

Android™

2055846912Z102

Order no. P205 0943 02 Part no. 205 584 69 12 Z102 Edition AEJ2017-1a