Disclaimer
The following online version of the Owner's Manual describes all models as well as all the standard and optional equipment of your vehicle. Country-specific differences in the language variants are possible. Note that your vehicle may not be fitted with all features described. This is also the case for safety-relevant systems and functions. Please contact your authorised Mercedes-Benz dealer if you would like to have a printed Owner's Manual for other vehicle models and vehicle model years. The online version is the current valid Owner's Manual version. Possible variations to your vehicle may not be taken into account as Mercedes-Benz constantly updates their vehicles and equipment to the state of the art and introduces changes in design and equipment.
Please also read the printed Owner's Manual, any supplementary documents and the digital Owner's Manual in the vehicle.

Copyright
All Rights Reserved. All texts, images, graphics, are subject to Copyright and other laws for the protection of intellectual property. They may not be copied for commercial purposes or for transmission, nor changed and used on other websites.

Mercedes-Benz

EQV

Operating Instructions

Mercedes-Benz

Front passenger airbag warning

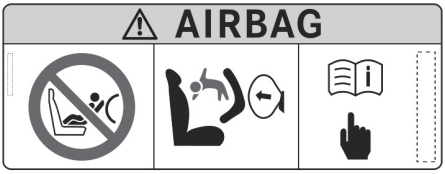

WARNING Risk of injury or death due to an enabled co-driver airbag

If the co-driver airbag is enabled, a child on the co-driver seat may be struck by the co-driver airbag during an accident.

- NEVER use a rearward-facing child restraint system on a seat with an ENABLED FRONT AIRBAG. DEATH or SERIOUS INJURY to the CHILD can occur.

Observe the chapter "Children in the vehicle".

Welcome to the world of Mercedes-Benz

Before you first drive off, read this Operating Manual carefully and familiarise yourself with your vehicle. For your own safety and a longer operating lifespan, follow the instructions and warning notices in this Operating Manual. Disregarding them may result in damage to the vehicle or environment or in injuries to people.

The standard equipment and product description of your vehicle may vary, depending on the following factors:

- Model
- Order
- National version
- Availability

The illustrations in this Operating Manual show a left-hand drive vehicle. On right-hand-drive vehicles, the layout of vehicle components and control elements differs accordingly.

Mercedes-Benz is constantly developing its vehicles further.

Mercedes-Benz therefore reserves the right to introduce changes in the following areas:

- Design
- Equipment
- Technical features

Your vehicle may therefore differ, in individual cases, from that shown in the descriptions and illustrations.

The following documents are integral parts of the vehicle:

- Digital Operating Manual
- Printed Operating Manual
- Service booklet
- Equipment-dependent supplements

Always keep these documents in the vehicle. If you sell the vehicle, always pass all documents on to the new owner.

4475842112Z102

Symbols 4

At a glance 6
Cockpit 6
Warning and indicator lamps 7
Steering wheel with buttons 8
Centre console 9
Overhead control panel 13
Door control panel 14

Digital Operating Instructions 15
Calling up the Digital Operating Instructions 15

General notes 16
Environmental protection 16
Take-back of end-of-life vehicles 16
Mercedes-Benz GenuineParts 16
Information about attachments, add-on equipment, installations and conversions 17
Owner's manual 17
Operating safety 18
Declarations of conformity and notes on driving in different countries 19
Diagnostics connection 22
Qualified specialist workshop 22
Vehicle registration 22
Correct use of the vehicle 23
Information on the REACH Regulation 23
Notes for persons with electronic medical aids 23
Implied warranty 24
QR codes for rescue card 24
Data storage 24
Copyright 27

Occupant safety 28
Restraint system 28
Seat belts 29
Airbags 32
PRE-SAFE® System 37
Automatic measures after an accident 37
Safely transporting children in the vehicle 37
Notes on pets in the vehicle 49

Opening and closing 50
Key 50
Doors 52
Sliding door 54
Electric sliding door 55
Tailgate 58
Side window 61
Panorama sliding sunroof 63
Anti-theft prevention 66

Seats and stowage 69
Notes on the correct driver's seat position 69
Notes on grab handles 69
Seats 69
Steering wheel 92
Stowage areas 93
Folding table 94
Information about the bottle holder 97
Cup holder 97
Ashtray and cigarette lighter 98
Sockets 99
Switching the refrigerator box in the centre console on and off 100

Light and vision 102
Exterior lighting 102
Interior lighting 107
Changing bulbs 108
Windscreen wipers 113
Mirrors 115
Operating sun visors 117

Climate control 118
Overview of climate control systems 118
Operating climate control systems 119
Operating air vents 123
Notes on pre-entry climate control 124
Using pre-entry climate control via the key 124
Using pre-entry climate control for departure time 125
Switching pre-entry climate control on or off via the button 126

Driving and parking 127
Driving 127
Transmission 133
AIRMATIC 135
Charging the high-voltage battery 136
Parking 145
Driving and driving safety systems 147

Instrument cluster and on-board computer **169**
Overview of the instrument cluster 169
Function of the power display 169
Overview and operation of the on-board computer 170
Overview of data shown on the instrument cluster display 171
Function of the charge level display 171
Display of the available power 172
Adjusting the instrument lighting 172
Overview of menus on the on-board computer 172
Menus and submenus 173

Mercedes me **179**
Mercedes me calls 179
Mercedes me connect 182
Mercedes me and apps 183

MBUX multimedia system **185**
Overview and operation 185
System settings 188
Navigation 191
Telephone 196
Overview of Smartphone Integration 199
Web browser overview 199
Radio and media 200
Sound settings 203

Transporting **204**
Notes on loading guidelines 204
Notes on distributing the load within the vehicle 205
Securing loads 206
Load securing aid 208
Carrier systems 211

Maintenance and care **213**
Notes on maintenance 213
Service interval display 213
Engine compartment 214
Cleaning and care 217

Breakdown assistance **222**
Emergency 222
Mercedes-Benz emergency call system 223
Flat tyre 225
Battery 225
Towing or tow-starting 227
Electrical fuses 231
Vehicle tool kit 231

Wheels and tyres **233**
Information on noise or unusual driving characteristics 233
Notes on regularly inspecting wheels and tyres 233
Information on driving with summer tyres 233
Information on M+S tyres 233
Notes on snow chains 234
Tyre pressure 234
Changing a wheel 237
Information on wheel and tyre combinations 242
Spare wheel 243

Technical data **245**
Information on the technical data 245
On-board electronics 245
Radio regulations 246
Vehicle identification plate, vehicle identification number (VIN) and engine number 248
Operating fluids and capacities 249
Vehicle data 251
Lashing points and carrier systems 252

Display messages and warning and indicator lamps **254**
Display messages 254
Warning and indicator lamps 275

Index **283**

In these Operating Instructions, you will find the following symbols:

WARNING Danger due to not observing the warning notices

Warning notices draw your attention to hazards that may endanger your health or life, or the health or life of others.

▶ Observe the warning notices.

ENVIRONMENTAL NOTE Environmental damage due to failure to observe environmental notes

Environmental notes include information on environmentally responsible behaviour or environmentally responsible disposal.

▶ Observe environmental notes.

NOTE Damage to property due to failure to observe notes on material damage

Notes on material damage inform you of risks which may lead to your vehicle being damaged.

▶ Observe notes on material damage.

ⓘ These symbols indicate useful instructions or further information that could be helpful to you.

▶	Instructions
(→ page)	Further information on a topic
Display	Messages on the display
⮱▶	Highest menu level to be selected in the multimedia/audio system
▶▶	Corresponding submenus to be selected in the multimedia/audio system
*	Indicates a cause

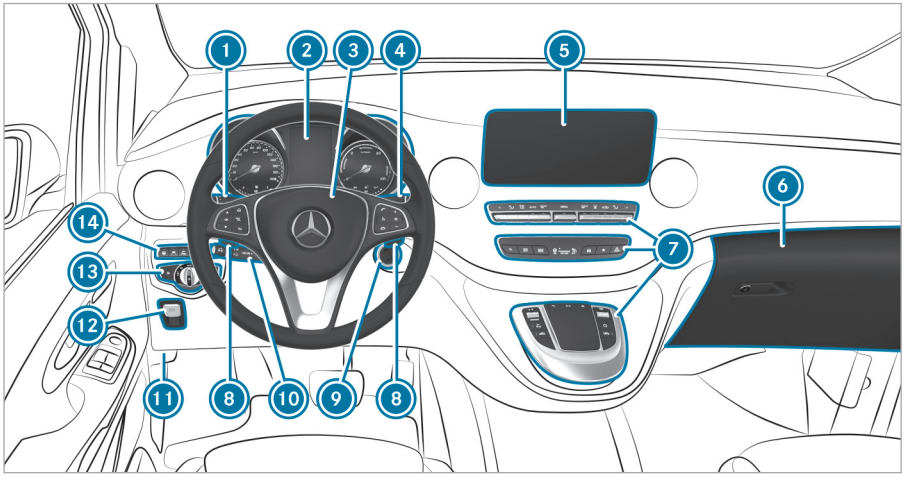

1 Combination switch	→	103
2 Instrument cluster	→	169
3 Adjusts the steering wheel	→	92
Horn		
4 DIRECT SELECT lever	→	133
5 Multimedia system display		
6 Glove compartment	→	93
7 Centre console operating units		
8 Steering wheel gearshift paddles	→	128
9 Ignition lock	→	129
10 Cruise control lever	→	151
11 Diagnostics connection	→	22
Opens the bonnet	→	214
12 Parking brake	→	145
13 Light switch	→	102
14 Driving systems control panel:		
Lane Keeping Assist	→	167
360° camera	→	159

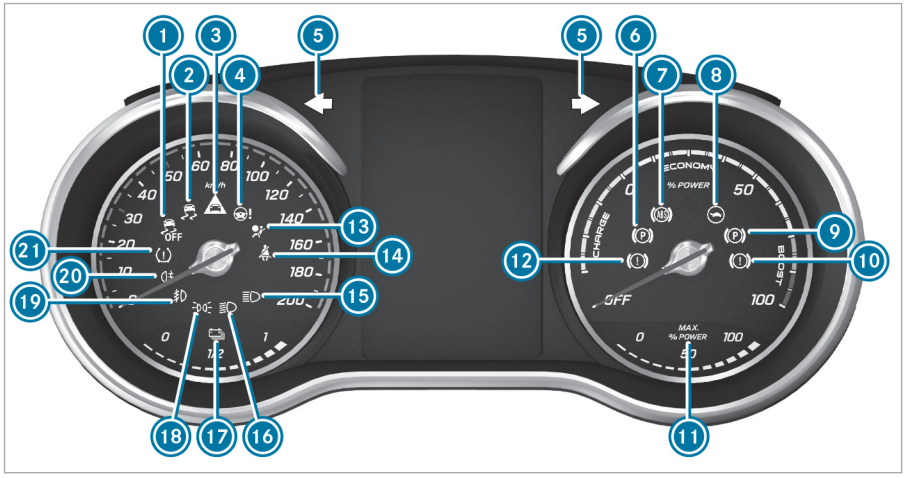

1	ESP® OFF	→	276
2	ESP®	→	276
3	Distance warning	→	280
4	Power steering	→	280
5	Turn signal indicators	→	103
6	Parking brake (yellow)	→	276
7	ABS	→	276
8	Output reduced	→	280
9	Parking brake (red)	→	276
10	(red) Brakes	→	276
11	Display of the available power	→	172
12	(yellow) Regenerative brake system malfunction	→	128
13	Restraint system	→	276
14	Seat belt	→	279
15	High beam	→	103
16	Low beam	→	102
17	High-voltage battery reserve	→	171
18	Standing lights and number plate and instrument lighting	→	102
19	Inoperative		
20	Rear fog light	→	102
21	Tyre pressure monitoring system	→	281
	Corresponding messages may also be shown on the instrument cluster display.	→	254

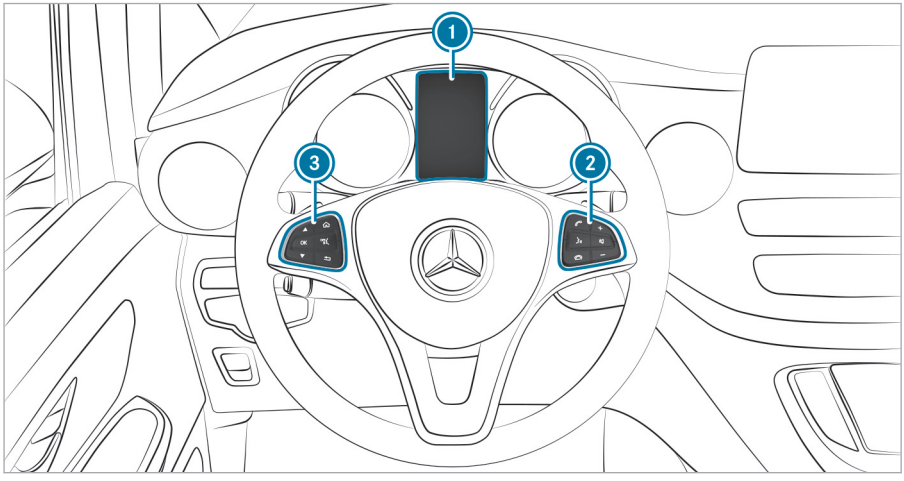

1 Display	→	171
2 Ends or declines calls/ exits the phone book or redial memory	→	177
Makes or accepts calls/ switches to the redial memory		
+ – Adjusts the volume		
Mutes		
Activates LINGUATRONIC	→	187
3 Calls up the main menu	→	170
▲ ▼ Selects a menu or submenu or scrolls through lists		
OK Confirms a selection/ hides display messages		
Back		
Deactivates LINGUA-TRONIC	→	187

Centre console, upper section

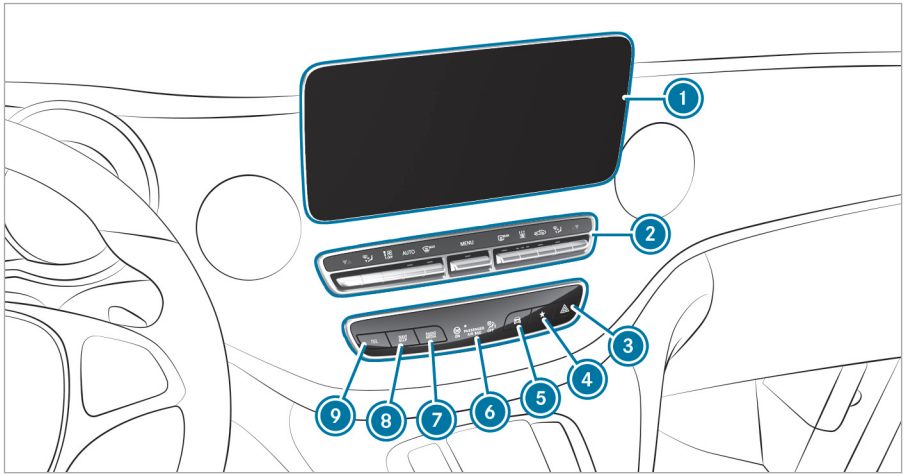

1. Multimedia system display
2. Climate control system operating unit → 118
3. Switches the hazard warning light system on/off → 103
4. Calls up favourites → 186
5. Calls up vehicle functions
6. PASSENGER AIR BAG indicator lamps → 35
7. RADIO MEDIA Calls up radio or media → 186
8. NAV/ MAP Calls up navigation → 191
9. TEL Calls up the telephone → 198

Centre console, middle section

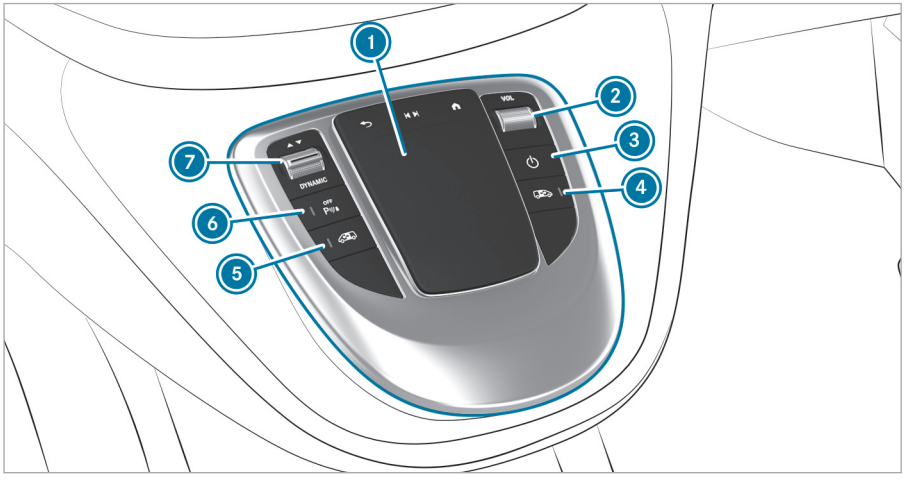

1 Touchpad	→	186
2 Adjusts and mutes the volume		
3 Switches the multimedia system on/off		
4 Opens and closes the electric sliding door on the right side of the vehicle	→	56
5 Opens and closes the electric sliding door on the left side of the vehicle	→	56
6 Activates/deactivates PARKTRONIC	→	158
7 DYNAMIC SELECT switch	→	134

Centre console, lower section

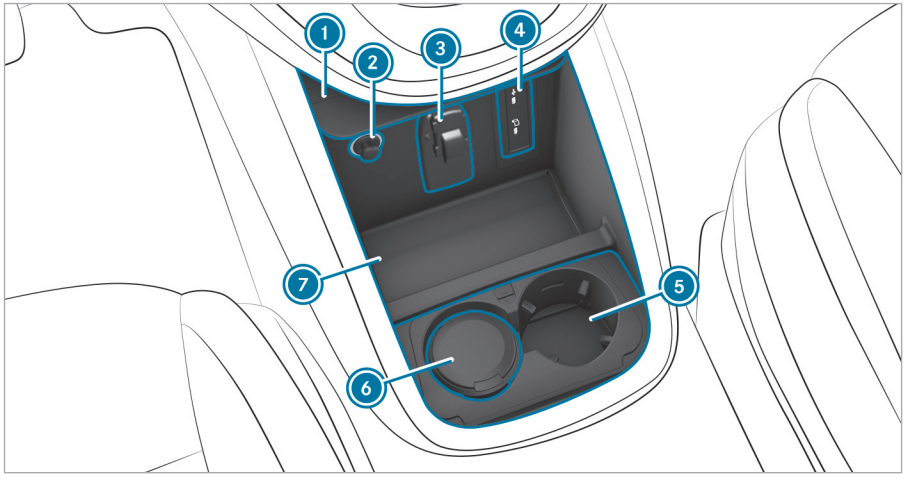

Storage compartment with cover

1 Cover	→	93
2 12 V socket	→	99
Cigarette lighter	→	98
3 Holder for the mobile phone bracket		
4 Media Interface with two USB ports or with two USB ports and one SD card slot		
5 Cup holder		
6 Ashtray	→	98
7 Storage compartment		
Device installation frame for auxiliary equipment, e.g. a tachograph		

Centre console between the driver's and front passenger seats

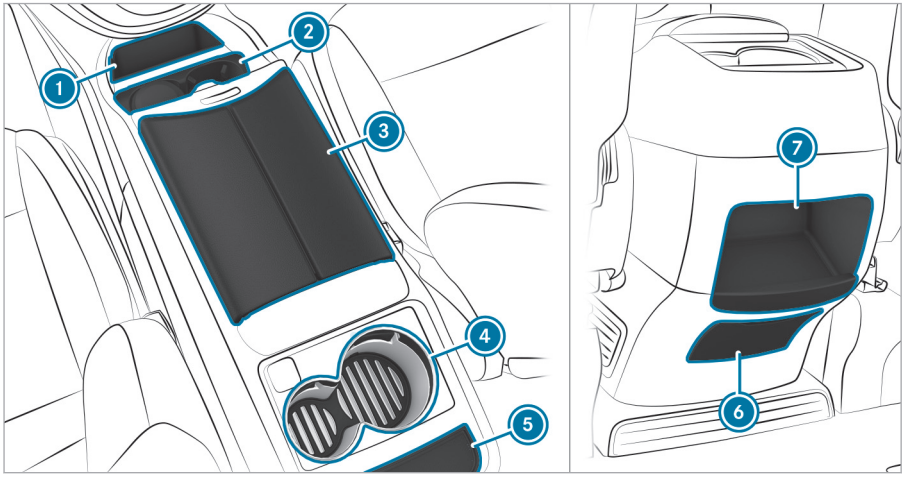

1 Stowage compartment		
2 Cup holders		
3 Stowage compartment		
Media Interface with two USB ports and an SD card slot		
Refrigerator box	→	100
4 Temperature-controlled cup holder	→	97
5 Stowage compartment		
6 Cigarette lighter	→	98
Ashtray	→	98
12 V socket	→	99
230 V socket	→	99
7 Stowage compartment		

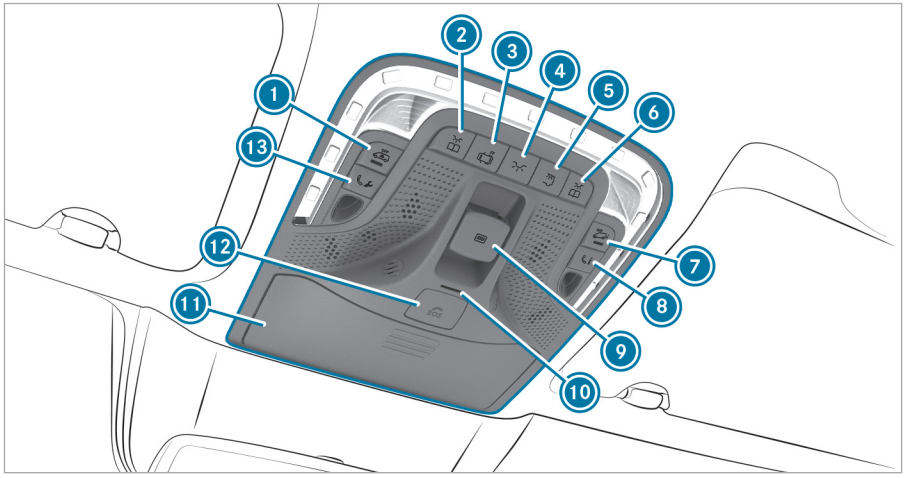

1	Deactivates interior protection	→	67
2	Switches the left-hand reading lamp on/off	→	107
3	Switches automatic interior lighting control on/off	→	107
4	Switches the front interior lighting on/off	→	107
5	Switches the rear/load compartment lighting on/off	→	107
6	Switches the right-hand reading lamp on/off	→	107
7	Deactivates tow-away protection	→	67
8	Button for Info call	→	179
9	Opens/closes the panorama sliding sunroof	→	64
	Opens/closes the roller sunblinds	→	64
10	ATA indicator lamp	→	66
11	Glasses compartment	→	94
12	SOS button	→	223
13	Breakdown assistance call button	→	179

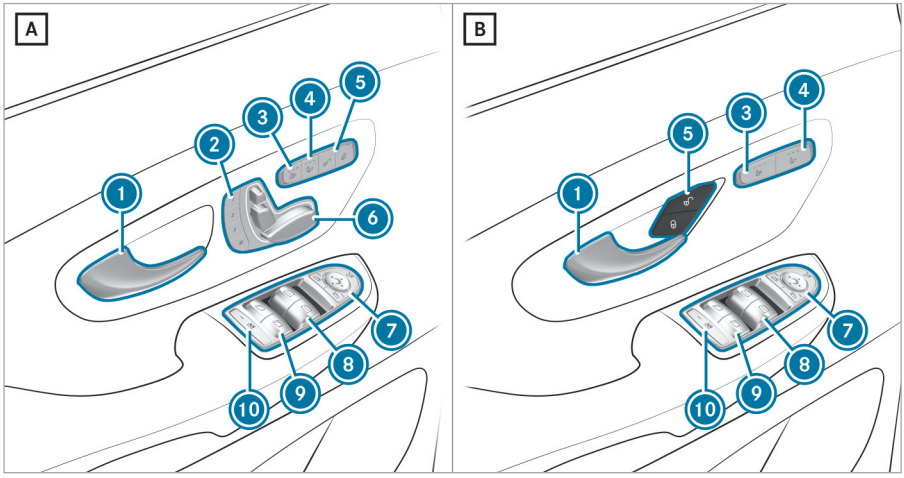

A Vehicle with electrically adjustable front seats		
B Vehicle with manually adjustable front seats		
1 Opens the door	→	52
2 M 1 2 3 Saves the seat and exterior mirror settings	→	73
3 Seat heating	→	90
4 Seat ventilation	→	92
5 Unlocks/locks the vehicle	→	53
6 Adjusts the seats electrically	→	71
7 Adjusts and folds the outside mirrors out/in electrically	→	115
8 Opens/closes the front side windows	→	61
9 Opens/closes the hinged window in the rear	→	62
10 Locks/unlocks the lock in the rear compartment for the hinged window (child safety lock)	→	49

Calling up the Digital Operating Instructions

Multimedia system:

→ Info ▸▸ Owner's Manual ▸▸ ⓘ

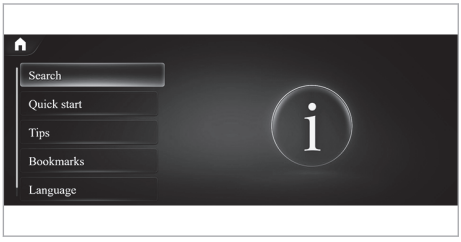

The Digital Operating Instructions describe the function and operation of the vehicle and the multimedia system.

▶ Select one of the following menu items in the Digital Operating Instructions:

- Search: here you can use keywords to quickly locate answers to questions concerning vehicle operation.
- Quick start: Here you will find the first steps for setting up the driver's seat.
- Tips: provides you with information on specific everyday situations for your vehicle.
- Bookmarks: you can access your saved personal bookmarks here.
- Language: you can set the language for the Digital Operating Instructions here.

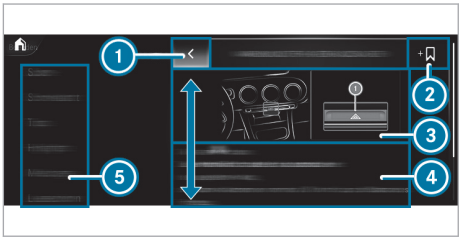

1. Back
2. Add bookmarks
3. Picture
4. Content area
5. Menu

Some sections in the Digital Operating Instructions, suchas warning notes, can be expanded and collapsed.

Additional options for calling up the Digital Operating Instructions

▶ **Direct access:** pressing and holding down an entry in the tab bar of the multimedia system opens the corresponding content in the Digital Operating Instructions.

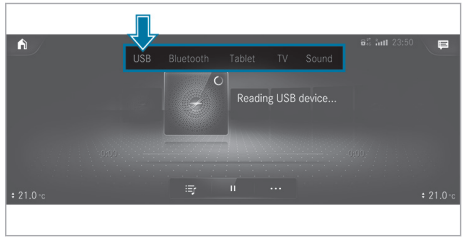

▶ **LINGUATRONIC:** Call up the Digital Operating Instructions via the voice control system.

The Digital Operating Instructions are deactivated for safety reasons while driving.

ⓘ The Operating Instructions can also be found in the Mercedes-Benz Guides App in all common app stores.

Environmental protection

ENVIRONMENTAL NOTE Environmental damage due to operating conditions and personal driving style

Operate your vehicle in an environmentally responsible manner to help protect the environment. Please observe the following recommendations on operating conditions and personal driving style.

Operating conditions:

- ▶ Make sure that the tyre pressure is correct.
- ▶ Do not carry any unnecessary weight (e.g. roof luggage racks once you no longer need them).
- ▶ Monitor energy consumption.
- ▶ Adhere to the service intervals.
  A regularly serviced vehicle will contribute to environmental protection.
- ▶ Always have maintenance work carried out at a qualified specialist workshop.

Personal driving style:

- ▶ Drive carefully and maintain a suitable distance from the vehicle in front.
- ▶ Avoid frequent, sudden acceleration and braking.
- ▶ Drive in a way that conserves energy. Observe the ECO display for an economical driving style.

ENVIRONMENTAL NOTE Environmental pollution caused by irresponsible disposal of the high-voltage battery

A high-voltage battery contains materials which are harmful to the environment.

- ▶ Dispose of faulty high-voltage batteries at a qualified specialist workshop.

Take-back of end-of-life vehicles

EU countries only:
Mercedes-Benz will take back your end-of-life vehicle for environment-friendly disposal in accordance with the European Union (EU) End-Of-Life Vehicles Directive.

A network of vehicle take-back points and dismantlers has been established for you to return your vehicle. You can leave it at any of these points free of charge. This makes an important contribution to closing the recycling circle and conserving resources.

For further information about the recycling and disposal of end-of-life vehicles, and the take-back conditions, please visit the national Mercedes-Benz website for your country.

Mercedes-Benz GenuineParts

ENVIRONMENTAL NOTE Environmental damage caused by not using recycled reconditioned components

Mercedes-Benz AG offers recycled reconditioned components and parts with the same quality as new parts. The same entitlement from the implied warranty is valid as for new parts.

- ▶ Recycled reconditioned components and parts from Mercedes-Benz AG.

NOTE Impairment of the operating efficiency of the restraint systems from installing accessory parts or from repairs or welding

Airbags and seat belt tensioners, as well as control units and sensors for the restraint systems, may be installed in the following areas of your vehicle:

- doors
- door pillars
- Sill
- Seats
- Cockpit
- Instrument display
- Centre console
- lateral roof frame

- ▶ Do not install accessory parts such as audio systems in these areas.
- ▶ Do not carry out repairs or welding.
- ▶ Have accessories retrofitted at a qualified specialist workshop.

If you use parts, tyres, wheels or safety-relevant accessories that have not been approved by Mercedes-Benz, the operating safety of the vehicle may be jeopardised. Safety-relevant systems such

as the brake system may malfunction. Use only Mercedes-Benz GenuineParts or parts of equal quality. Only use tyres, wheels and accessory parts that are approved for your vehicle model.

Mercedes-Benz tests original parts, conversion parts and accessory parts that have been approved for your vehicle model for reliability, safety and suitability. Despite ongoing market research, Mercedes-Benz is unable to assess other parts. Mercedes-Benz accepts no responsibility for the use of such parts in Mercedes-Benz vehicles, even if they have been approved officially or independently by a testing centre.

Certain parts are officially approved for installation or modification only if they comply with legal requirements. All Mercedes-Benz GenuineParts meet the registration requirements. The use of non-approved parts may invalidate the vehicle's general operating permit.

This is the case in the following situations:

- The vehicle type changes from that stated in the general operating permit.
- Other road users could be endangered.
- The noise level increases.

Always specify the vehicle identification number (VIN) when ordering Mercedes-Benz GenuineParts (→ page 248).

Information about attachments, add-on equipment, installations and conversions

Notes on body/equipment mounting directives

For safety reasons, have add-on equipment produced and fitted in accordance with the valid Mercedes-Benz body/equipment mounting directives. These body/equipment mounting directives ensure that the chassis and add-on equipment form one unit and that the greatest possible level of operational and driving safety is achieved.

Both vehicle manufacturers and body manufacturers must always ensure that the products they manufacture come into circulation only in a safe state and do not pose any risks to people. Otherwise, there may be consequences under civil, criminal or public law. All manufacturers are responsible for the products that they have manufactured. Manufacturers of attachments, add-on equipment, installations and conversions must guarantee compliance with Directive 2001/95/EC on general product safety.

The body manufacturer must also ensure compliance with standards concerning operational reliability (in accordance with ISO 26262) and cyber security (in accordance with ISO 21434 and UN R155).

Mercedes-Benz recommends the following procedure for safety reasons:

- Do not make any other changes to the vehicle.
- Obtain approval from Mercedes-Benz in the event of deviations from the approved body/equipment mounting directives.

Acceptance tests performed by public test bodies or official approvals do not rule out safety risks.

Observe the information about genuine Mercedes-Benz parts (→ page 16).

You will find the Mercedes-Benz body/equipment mounting directives online on the https://bb-portal.mercedes-benz-vans.com

You will also find information about the PIN assignment and changing the fuse there.

ⓘ You can obtain further information at a qualified specialist workshop.

ⓘ You can find further information on requesting a check for compatibility with the basic vehicle in the body/equipment mounting directives.

⚠ **WARNING** Risk of accident and injury in the event of improper conversions or changes to the vehicle

Conversions or changes to the vehicle can prevent systems or components from functioning properly and/or jeopardise the vehicle's operational safety.

▶ Always have conversions or changes to the vehicle carried out at a qualified workshop.

Owner's manual

These Operating Instructions describe all models, as well as standard and optional equipment of your vehicle that was available at the time of going to press. Country-specific differences are possible. Note that your vehicle may not be fitted with all functions described. This is also the case for systems and functions relevant to safety. Therefore, the equipment on your vehicle may differ from that in the descriptions and illustrations.

The original purchase agreement documentation for your vehicle contains a list of all the systems in your vehicle.

Should you have any questions concerning equipment and operation, consult a Mercedes-Benz Service Centre.

ⓘ Please bear in mind that all the speed values stated in this Owner's Manual are approximate and are subject to a certain tolerance.

The Operating Instructions and Service Booklet are important documents and should be kept in the vehicle.

Note on vehicles which are equipped by body manufacturers

Always observe the body manufacturer's operating instructions. You could otherwise fail to recognise dangers.

Operating safety

⚠ **WARNING** Risk of accident due to malfunctions or system failures

If you do not have the prescribed service/maintenance work or any required repairs carried out, this could result in malfunctions or system failures.

▶ Always have the prescribed service- and maintenance work or any required repairs carried out in a qualified workshop.

⚠ **WARNING** Risk of accident or injury due to improper modifications to electronic components

Modifications to electronic components, their software or wiring can impair their functionality and/or the functionality of other networked components or safety-relevant systems.

This can endanger the vehicle's operating safety.

▶ You must not tamper with wiring, electronic components, or their software.

▶ Always have work on electrical and electronic devices carried out at a qualified specialist workshop.

If you make any changes to the onboard electronics, the operating permit is rendered invalid.

Please observe the "Vehicle Electronics" section in the "Technical Data".

! **NOTE** Damage to the vehicle due to driving too fast and due to impacts to the vehicle underbody and suspension components

In the following situations, in particular, there is a risk of damage to the vehicle:

- the vehicle becomes grounded, e.g. on a high kerb or an unpaved road
- the vehicle is driven too fast over an obstacle, e.g. a kerb, speed bump or pothole
- a heavy object strikes the underbody or suspension components

In situations such as these, damage to the body, underbody, suspension components, wheels or tyres and high-voltage battery components may not be visible. Components damaged in this way can unexpectedly fail or, in the case of an accident, may no longer absorb the resulting force as intended.

▶ Have the vehicle checked and repaired immediately at a qualified specialist workshop.

or

▶ If driving safety is impaired while continuing your journey, pull over and stop the vehicle immediately, while paying attention to road and traffic conditions, and contact a qualified specialist workshop.

Electric vehicles have an electric motor. The electric motor's power supply is provided by the high-voltage on-board electrical system.

⚠ **DANGER** Risk of death and fire due to modified and/or damaged components of the high-voltage on-board electrical system

The vehicle's high-voltage on-board electrical system is under high voltage. If you modify component parts in the vehicle's high-voltage on-board electrical system or touch damaged component parts, you may be electrocuted. In addition, modified and/or damaged components may cause a fire.

In the event of an accident or impact to the vehicle underbody, components of the high-voltage electrical system may be damaged although the damage is not visible.

▶ Never make any modifications to the high-voltage on-board electrical system.

- Do not switch on or use the vehicle if its high-voltage on-board electrical system components have been modified or damaged.
- Never touch damaged components of the high-voltage on-board electrical system.
- After an accident, do not touch any components of the high-voltage on-board electrical system.
- After an accident, have the vehicle transported away.
- Have the components of the high-voltage on-board electrical system checked at a qualified specialist workshop and replaced if necessary.

The components of the high-voltage on-board electrical system are marked with yellow warning stickers. The cables of the high-voltage on-board electrical system are orange.

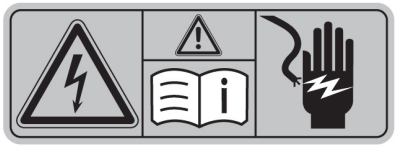

Vehicles with an electric motor generate significantly less noise than vehicles with combustion engines. As a result, your vehicle may not be heard by other road users in certain situations. This can occur, for example, when you are parking and your vehicle cannot be seen by other road users. In order to allow for the possibility that other road users may behave unpredictably, adopt a particularly anticipatory driving style.

The vehicle is additionally equipped with a sound generator, which serves as an acoustic vehicle alerting system (AVAS)(→ page 127) . This protective equipment is prescribed by law.

The external sound produced by the sound generator (AVAS) can be heard in the passenger compartment at low speeds and does not represent a malfunction.

Declarations of conformity and notes on driving in different countries

Electromagnetic compatibility

The electromagnetic compatibility of the vehicle components has been checked and certified according to the currently valid version of Regulation UN-R 10.

National information for regulatory radio components

Notes when crossing national borders
You must observe the regulatory provisions concerning radio for the country in which you are currently driving when operating the vehicle.

Only for EU and EFTA countries and countries that recognise the EU manufacturer's declaration of conformity:

The following information is valid for all wireless components in the vehicle as well as the information systems and communication devices integrated in the vehicle:

The manufacturers of the wireless components ensure that all wireless components installed in the vehicle conform to Directive 2014/53/EU. The full texts of the EU declarations of conformity are available at the following web address:

https://moba.i.mercedes-benz.com/markets/ece-row/baix/cars/certificates-of-conformity/en_GB/index.html

Further information is available from any Mercedes-Benz service centre.

Israel only:
It is prohibited to make any change to a vehicle-installed radio component that could affect the wireless specifications of the device, including software changes, replacement of the original antenna, or adding the option to connect the device to an external antenna, without first obtaining approval from the Communica-tions Ministry, because of concern about wireless interference.

United Kingdom only:

The following information is valid for all wireless components in the vehicle as well as the information systems and communication devices integrated in the vehicle:

The manufacturers of the radio components declare that all radio equipment installed in the vehicle is in compliance with the relevant statutory requirements. The full texts of the declarations of conformity are available at the following web address:

https://moba.i.mercedes-benz.com/markets/ece-row/baix/cars/certificates-of-conformity/en_GB/index.html

Brazil only:

Note on the two-way radio system in the vehicle:

This system is not subject to protection against harmful interference and must not cause interference in properly approved systems.

Jamaica only:
All wireless vehicle components have received type approval from the SMA.

Russia only:

The manufacturers of the wireless components installed in the vehicle hereby declare that all wireless components installed in the vehicle conform to the technical regulations for two-way radios. Further information is available from any Mercedes-Benz Service Centre.

Ukraine only:

The manufacturers of the wireless components installed in the vehicle hereby declare that all wireless components installed in the vehicle conform to the technical regulations for two-way radios. Further information is available from any Mercedes-Benz service centre.

Jack

EU and EFTA countries only:
Copy and translation of the original declaration of conformity:

EC declaration of conformity

1.

The undersigned, representing

Manufacturer:

BRANO a.s.

74741 Hradec nad Moravicí, Opavská 1000,

Czech Republic

ID No.: 64-387-5933

VAT No.: CZ64-387-5933

herewith declares under our sole responsibility that the product:

2. a)

Name:

Jack

Type, number:

A) A 164 580 02 18, A 166 580 01 18

B) A 240 580 00 18

C) A 639 580 02 18

Year of manufacture: 2015

Complies with all relevant provisions

Directive No. 2006/42/EC

b)

Description and purpose of use:

The jack is only intended for lifting the specified vehicle in accordance with the operating instructions affixed to the jack.

3.

Reference data of the harmonised standards or specifications

A) ISO 4063, EN ISO 14341-A, DBL 7382.20, MBN 10435, AS 2693

B) ISO 4063, ISO 14341-A, DBL 7392.10, MBN 10435

C) DBL 7392.10, DBL 8230.10

Technical documentation of the product is stored at the premises of the manufacturer. The person responsible for assembling the technical documentation of the product: Head of the technical department Brano a.s.

4.

Hradec nad Moravicí

City

5.

05.05.2015

Date

Signed by:

Director of Quality

United Kingdom only:
Copy and translation of the original declaration of conformity:

UK declaration of conformity

1.

The undersigned, representing

Manufacturer:

BRANO a.s.

74741 Hradec nad Moravicí, Opavská 1000, Czech Republic

ID No.: 64-387-5933

VAT No.: CZ64-387-5933

herewith declares under our sole responsibility that the product:

2. a)

Name:

Jack

Type, number:

A) A 164 580 02 18, A 166 580 01 18

B) A 240 580 00 18

C) A 639 580 02 18

D) A 639 580 03 18

E) A 910 580 00 00

F) A 247 580 00 00, A 293 580 00 00

G) A 247 580 02 00, A 293 580 02 00

Year of manufacture: 2022

Complies with all relevant provisions

Supply of Machinery (Safety) Regulations 2008

b)

Description and purpose of use:

The jack is only intended for raising the specified vehicle in accordance with the operating instructions affixed to the jack.

3.

Reference data of the harmonised standards or specifications

ISO 4063, EN ISO 14341-A, DBL 8230.10, DBL 7382.20, DBL 7392.10, DBL 8451.15, MBN 10435,

Technical documentation of the product is stored at the premises of the manufacturer. The person responsible for assembling the technical documentation of the product: Head of the technical department Brano a.s.

4. Hradec nad Moravicí	5. 04.07.2022	[Signature] Dipl. Engineer Michal Koberský
City	Date	Director SBU-CJ

Diagnostics connection

The diagnostics connection is a technical interface in the vehicle. It is used, for example, during repair and maintenance work or for reading out vehicle data in a specialist workshop. Diagnostic devices should therefore be connected only in a qualified specialist workshop.

WARNING Risk of accident due to connecting devices to the diagnostics connection

If you connect devices to the diagnostics connection of the vehicle, the function of vehicle systems and operating safety may be impaired.

- For safety reasons, we recommend that you only use and connect products approved by a Mercedes-Benz service centre.

WARNING Risk of accident due to objects in the driver's footwell

Objects in the driver's footwell may impede pedal travel or block a depressed pedal.

This jeopardises the operating and road safety of the vehicle.

- Stow all objects in the vehicle securely so that they cannot get into the driver's footwell.
- Always fit the floor mats securely and as prescribed in order to ensure that there is always sufficient room for the pedals.
- Do not use loose floor mats and do not place floor mats on top of one another.

NOTE Battery discharging from using devices connected to the diagnostics connection

Using devices at the diagnostics connection drains the battery.

- Check the charge level of the battery.
- If the charge level is low, charge the battery.

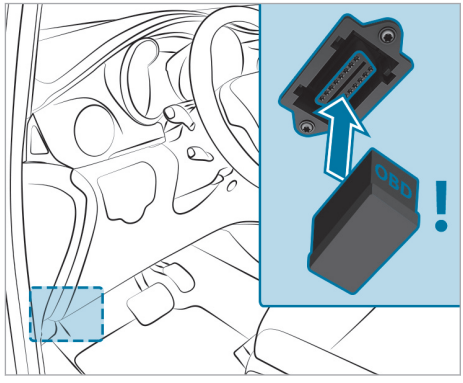

The connection and use of another device on the diagnostics connection can have the following effects:

- Malfunctions in the vehicle system
- Permanent damage to vehicle components

Please refer to the warranty terms and conditions regarding this.

Qualified specialist workshop

A qualified specialist workshop has the necessary special skills, tools and qualifications to correctly carry out any necessary work on your vehicle. This particularly applies to safety-relevant works.

Always have the following work on the vehicle carried out at a qualified specialist workshop:

- Safety-relevant works
- Service and maintenance work
- Repair work
- Modifications as well as installations and conversions
- Work on electronic components
- Work on high-voltage components

Mercedes-Benz recommends that you use a Mercedes-BenzService Centre for this purpose.

Vehicle registration

Mercedes-Benz may ask its service centres to carry out technical inspections on certain vehicles. The quality or safety of the vehicles is improved as a result of the inspection.

Mercedes-Benz can only inform you about vehicle checks if it has your registration data.

In the following cases, your vehicle may not be registered to you yet:

- you did not purchase your vehicle at an authorised specialist dealer.
- your vehicle has not yet been inspected at a Mercedes-Benz service centre.

It is advisable to register your vehicle with a Mercedes-Benz service centre.

Inform Mercedes-Benz as soon as possible about any change in address or vehicle ownership. You can do this at a Mercedes-Benz service centre, for example.

Correct use of the vehicle

If you remove warning stickers, you or others may fail to recognise the dangers. Leave warning stickers in position.

Observe the following information in particular when operating the vehicle:

- Safety notes in these operating instructions
- Technical data for the vehicle
- Traffic rules and -regulations of the country in which you are currently located
- Laws pertaining to motor vehicles and safety standards of the country in which you are currently located
- Radio regulations of the country in which you are currently located

WARNING Risk of fire and accident when transporting substances which are hazardous to health or react aggressively

Gases and fluids can even escape from containers which are fully closed.

This can adversely affect your concentration during the journey and your health. Electronic component parts may also experience malfunctions, short circuits or system failures.

▶ Do not stow or transport any substances which are hazardous to health and/or aggressively reactive in the vehicle interior.

Substances that constitute a health hazard or react aggressively include, for example:

- Solvents
- Fuel
- Oil and grease
- Cleaning agents
- Acid

Information on the REACH Regulation

EU and EFTA countries only:

The REACH Regulation (Regulation (EC) No. 1907/2006, Article 33) stipulates a duty to supply information about substances of very high concern (SVHCs).

Mercedes-Benz AG acts to the best of its knowledge to prevent these SVHCs from being used and to enable customers to safely handle these substances. According to supplier information and internal product information, there are SVHCs known to Mercedes-Benz AG that are found in individual components of this vehicle in quantities of over 0.1 percent by weight.

Further information can be obtained at the following addresses:

- https://reach.mercedes-benz.com/de/home/
- https://reach.mercedes-benz.com/en/home/

Notes for persons with electronic medical aids

-Mercedes-Benz AG cannot, despite carefully developing vehicle systems, completely rule out the interaction of vehicle systems with electronic medical aids suchas cardiac pacemakers.

In addition, there are components built into the vehicle that, regardless of the operating status of your vehicle, can generate magnetic fields on a par with permanent magnets. These fields can be found, forexample, in the area around the multimedia and sound system or also in the seating area, depending on the vehicle equipment.

For this reason, the following can occur in isolated cases, depending on the aids used:

- medical aids malfunctioning
- adverse health effects

Observe the notes and warnings of the manufacturer of the medical aids; if in doubt, contact the device manufacturer and/or your doctor. If there is continuing uncertainty concerning the possibility of medical aids malfunctioning,-Mercedes-Benz AG recommends using only few electrical vehicle systems and/or maintaining a distance from the components.

When charging the high-voltage battery, keep a distance of at least an arm's length between the medical aid and the following components:

- the power supply equipment

  This includes charging stations in the form of a wallbox or a public charging point, forexample.
- vehicle components carrying live voltage

  This includes the charging cable and the charging control box, forexample.

Only have repairs and maintenance work in the area of the following components carried out by a qualified specialist workshop:

- vehicle components carrying live voltage
- transmission aerials
- multimedia system and sound system

If you have any queries or suggestions, consult a qualified specialist workshop.

Implied warranty

! **NOTE** Damage to the vehicle arising from violation of these operating instructions.

Damage to the vehicle can arise from violation of these operating instructions.

Such damage is not covered by either the Limited Warranty or the new or used-vehicle warranty.

▶ Observe the instructions in these operating instructions on proper operation of your vehicle as well as regarding possible vehicle damage.

QR codes for rescue card

The QR code stickers are affixed to the B-pillar on the driver's and front passenger side. In the event of an accident, emergency services can use the QR code to quickly determine the corresponding rescue card for your vehicle. The current rescue card contains the most important information about your vehicle in a compact form, e.g. the routing of the electric lines.

Further information can be obtained at https://www.mercedes-benz.de/qr-code

Data storage

Data processing in the vehicle

Electronic control units

Electronic control units are fitted in your vehicle. Control units process data they receive from vehicle sensors, forexample, generate themselves or exchange between themselves. Some control units are required for the safe operation of your vehicle. For example, some assist you when driving, suchas driver assistance systems, while others enable convenience or infotainment functions.

The following provides you with general information regarding data processing in the vehicle. Additional information regarding which data in your vehicle are collected, saved and transmitted to third parties and for what purpose can be found in the information directly related to the functional characteristics in question in their respective Owner's Manual. This information is available online and digitally, depending on the vehicle's equipment.

Personal data

A unique vehicle identification number identifies every vehicle. Depending on the country, this vehicle identification number can be used by, forexample, governmental authorities to determine the owner's identity. There are other possibilities for using data collected from the vehicle to identify the owner or driver, suchas the licence plate number.

Therefore, data generated or processed by control units may be attributable to a person or, under certain conditions, become attributable to a person. Depending on which vehicle data are available, it may be possible to make inferences about, forexample, your driving behaviour, location, route or use patterns.

Legal requirements regarding the disclosure of data

If legally required to do so, manufacturers are, in individual cases, legally obliged to provide governmental entities, upon request and to the extent required, data stored by the manufacturer. Forexample, this may be the case during the investigation of a criminal offence.

Governmental entities are themselves authorised to read out data from the vehicle in individual cases and within the applicable legal framework. In the case of an accident, information that can help with an investigation can be taken from the airbag control unit, forexample.

Operational data in the vehicle

This is data regarding the vehicle's operation, which control units have processed.

This includes the following data, forexample:

- Vehicle status information suchas the speed, longitudinal acceleration, lateral acceleration, number of wheel revolutions or the fastened seat belts display
- Ambient conditions, suchas temperature, rain sensor or distance sensor

Generally, these are volatile data and will not be stored beyond the period of operation but will only be processed within the vehicle itself. Control units, forexample, vehicle keys, often contain data memories. Their use permits the temporary or permanent documentation of technical information about the vehicle's operating state, component loads, maintenance requirements and technical events or faults.

Depending on the technical equipment, the following data are stored:

- Operating status of system components, suchas fill levels, tyre pressure or battery status
- Malfunctions or faults in important system components, suchas lights or brakes
- System reactions in special driving situations, suchas an airbag deployment or the intervention of stability control systems
- information on events leading to vehicle damage
- Charge level of the high-voltage battery, estimated range

In certain cases, storing data that would have otherwise been temporary may be required. This may be the case if the vehicle has detected a malfunction, forexample.

If you use services suchas repair services and maintenance work, stored operational data and the vehicle identification number can be read out and used. They can be read out by service network employees, suchas workshops and manufacturers or third parties, suchas breakdown services. The same is true in the case of warranty claims and quality assurance measures.

In general, the readout is performed via the legally prescribed port for the diagnostics connection in the vehicle. The selected operating data document the vehicle's or individual components' technical conditions, help with fault diagnosis, compliance with warranty obligations and quality improvement. To that end, these data, particularly information about component loads, technical events, malfunctions and other faults, may be transmitted along with the vehicle identification number to the manufacturer. Furthermore, the manufacturer is subject to product liability. For this reason, the manufacturer also uses operational data from the vehicle, forexample, for recalls. These data can also be used to examine the customer's warranty and guarantee claims.

Fault memories in the vehicle can be reset by a service outlet or at your request as part of repair or maintenance work.

Convenience and infotainment functions

You can store the vehicle's convenience and individual settings and change or reset them at any time.

Depending on the vehicle equipment, this includes the following settings, forexample:

- Seat and steering wheel positions
- Suspension and climate control settings
- Individual settings, suchas interior lighting

Depending on the selected equipment, you can import data into vehicle infotainment functions yourself.

Depending on the vehicle equipment, this includes the following data, forexample:

- Multimedia data, suchas music, films or photos for playback in an integrated multimedia system
- address book data for use in connection with an integrated hands-free system or an integrated navigation system
- entered navigation destinations
- data about the use of Internet services

These data for convenience and infotainment functions may be saved locally in the vehicle or on a device connected to the vehicle, suchas a smartphone, USB flash drive or MP3 player. If you have entered these data yourself, you can delete them at any time.

These data are transmitted only from the vehicle to third parties at your request. This applies, particularly when you use online services per your selected settings.

Smartphone integration (e.g. Android Auto or Apple CarPlay®)

If your vehicle is accordingly equipped, you can connect your smartphone or another mobile end device to the vehicle. You can then control them by employing the control elements integrated into the vehicle. Images and audio from the smartphone can be output via the multimedia system. Certain information is simultaneously transferred to your smartphone. Depending on the type of integration, thisincludes position data, day/night mode and other general vehicle statuses. For more information, please consult the Owner's Manual for the vehicle or the infotainment system.

This integration allows the use of selected smartphone apps, suchas navigation or music player apps. There is no further interaction between the smartphone and the vehicle; in particular, vehicle data is not directly accessible. The type of additional data processing is determined by the provider of the app being used. The settings you can make, if any, depend on the specific app and your smartphone's operating system.

Online services

Wireless network connection

If your vehicle has a wireless network connection, data can be exchanged between your vehicle and other systems. The wireless network connection is made possible by the vehicle's own transmitter and receiver or by a mobile end device that you have brought into the vehicle, forexample, a smartphone. Online functions can be used via this wireless network connection. This includes online services and applications/apps provided to you by the manufacturer or by other providers.

Manufacturer's own services

Regarding the manufacturer's online services, the individual functions are described by the manufacturer in a suitable place, forexample, in the Operating Instructions or on the manufacturer's website, where the relevant data protection information is also given. Personal identification data may be used to provide online services. Data is exchanged via a secure connection, e.g. the manufacturer's designated IT systems. Any personal data which are collected, processed and used, other than for the provision of services, is done so exclusively on the basis of legal permission. This is the case, forexample, for a legally prescribed emergency call system, a contractual agreement or when consent has been given.

You can have services and functions, some of which are subject to a fee, activated or deactivated. This excludes legally prescribed functions and services, suchas an emergency call system.

Services of third parties

If you use online services from other providers (third parties), these services are the responsibility of the provider in question and subject to that provider's data protection conditions and terms of use. As a general rule, the manufacturer has no influence on the content exchanged.

For this reason, when services are provided by third parties, please ask the service provider in question for information about the type, extent and purpose of the collection and use of personal data.

Onboard Logic Unit (OLU)

The Onboard Logic Unit (OLU) is available to commercial customers.

It contains control units, including aerials for connection via wireless networks, that permit the exchange of data between your vehicle and other systems. The control units can be used in conjunction with service provided by a third party. Under certaincircumstances, these services may alter the basic configuration of the vehicle and could affect the performance of certain vehicle functions.

For further information about specific services, read the operating instructions of the third-party provider. For further information about the Onboard Logic Unit, consult a Mercedes-Benz Service Centre.

If you, yourself, do not own and are not responsible for the vehicle, you may notknow the current status of the Onboard Logic Unit. For further information concerning the services which are currently active, including any data which may be being processed as defined by the GDPR, please contact the person responsible for the vehicle.

Data protection rights

Depending on your country or the equipment and range of functions of your vehicle as well as the services you use and the services on offer, you are entitled to different data protection rights. Further information on data protection and your data protection rights can either be found on the manufacturer's website or you will receive this information as part of the various services and service offers. There, you will also find the contact information for the manufacturer and its data protection officer.

At a workshop, forexample, with the support of a specialist and possibly for a fee, you can have data read out which is stored only locally in the vehicle.

Copyright

Information on licences for free and open-source software used in your vehicle can be found on the data storage medium in your vehicle document wallet and with updates on the following website:

https://www.mercedes-benz.com/opensource

Restraint system

Protection provided by the restraint system

The restraint system includes the following components:

- Seat belt system
- Airbags
- Child restraint system
- Child seat securing systems

The restraint system can help prevent the vehicle occupants from coming into contact with parts of the vehicle interior in the event of an accident. In the event of an accident, the restraint system can also reduce the forces to which the vehicle occupants are subjected.

Only a seat belt which is worn correctly can provide the intended level of protection. Depending on the detected accident situation, seat belt tensioners and/or airbags supplement the protection offered by a correctly worn seat belt. Seat belt tensioners and/or airbags are not deployed in every accident.

In order for the restraint system to provide the intended level of protection, each vehicle occupant must observe the following information:

- Fasten seat belts correctly.
- Sit in an almost upright seat position with their back against the seat backrest.
- Sit with their feet resting on the floor, if possible.
- Always secure persons under 1.50 m tall in an additional restraint system suitable for Mercedes-Benz vehicles.

However, no system available today can completely eliminate injuries and fatalities in every accident situation. In particular, the seat belt and airbag generally do not protect against objects penetrating the vehicle from the outside. It is also not possible to completely rule out the risk of injury caused by the airbag deploying.

Limitations of the protection provided by the restraint system

WARNING Risk of injury or death due to modifications to the restraint system

Vehicle occupants may no longer be protected as intended if alterations are made to the restraint system.

- ▶ Never alter the parts of the restraint system.
- ▶ Never tamper with the wiring or any electronic component parts or their software.

If it is necessary to adjust the vehicle to accommodate a person with disabilities, contact a qualified specialist workshop.

Mercedes-Benz recommends that you only use driving aids which have been approved specifically for your vehicle by Mercedes-Benz.

Restraint system functionality

When the vehicle is switched on, a self-test is performed, during which the restraint system warning lamp lights up. It goes out no later than a few seconds after the vehicle is started. The components of the restraint system are then functional.

Restraint system malfunction

A malfunction has occurred in the restraint system in the following cases:

- The restraint system warning lamp does not light up when the vehicle is switched on.
- The restraint system warning lamp lights up continuously or repeatedly during a journey.

DANGER Risk of fatal injuries due to restraint system malfunctions

Components in the restraint system may be activated unintentionally or not deploy as planned in an accident. In the event of an accident, the high-voltage on-board electrical system may not be deactivated as intended.

You may suffer an electric shock if you touch the damaged components of the high-voltage on-board electrical system.

- ▶ Have the restraint system checked and repaired immediately at a qualified specialist workshop.
- ▶ After an accident, switch off the vehicle immediately.

Function of the restraint system in an accident

How the restraint system works is determined by the severity of the impact detected and the type of accident anticipated:

- frontal impact
- rear impact
- side impact
- overturning or rollover

The activation thresholds for the components of the restraint system are determined based on the evaluation of the sensor values measured at various points in the vehicle. This process is pre-emptive in nature. The triggering/deployment of the components of the restraint system should take place in good time at the start of the collision.

Factors which can only be seen and measured after a collision has occurred do not play a decisive role in the deployment of an airbag, nor do they provide an indication of airbag deployment.

The vehicle may be deformed significantly without an airbag being deployed. This is the case if only parts which are relatively easily deformed are affected and the rate of vehicle deceleration is not high. Conversely, an airbag may be deployed even though the vehicle suffers only minor deformation. If very rigid vehicle parts, such as longitudinal members, are hit, the vehicle deceleration may be high enough for this to happen.

Depending on the detected deployment situation, the components of the restraint system can be activated or deployed independently of each other:

- Seat belt tensioner: frontal impact, rear impact, side impact, overturning, rollover
- Driver's airbag, co-driver airbag: frontal impact
- Side airbag: side impact
- Window airbag: side impact, overturning, rollover, frontal impact

Only when the PASSENGER AIR BAG OFF indicator lamp is off can the co-driver airbag deploy in the event of an accident. If the co-driver seat is occupied, make sure, both before and during the journey, that the status of the co-driver airbag is correct (→ page 35).

⚠ **WARNING** Risk of burns from hot airbag components

The airbag parts are hot after an airbag has been deployed.

- ▶ Do not touch the airbag parts.
- ▶ Have a deployed airbag replaced at a qualified specialist workshop as soon as possible.

Mercedes-Benz recommends that you have the vehicle towed to a qualified specialist workshop after an accident. Take this into account, particularly if a seat belt tensioner is triggered or an airbag deployed.

If the seat belt tensioners are triggered or an airbag is deployed, you will hear a bang, and a small amount of powder may also be released:

- the bang will not generally affect your hearing.
- in general, the powder released is not hazardous to health but may cause short-term breathing difficulties to persons suffering from asthma or other pulmonary conditions.

  Provided it is safe to do so, leave the vehicle immediately or open the window in order to prevent breathing difficulties.

Seat belts

Protection provided by the seat belt

Always fasten your seat belt correctly before starting a journey. Only a seat belt which is worn correctly can provide the intended level of protection.

⚠ **WARNING** Risk of injury or death due to incorrectly fastened seat belt

If the seat belt is not worn correctly, it cannot perform its intended protective function.

In addition, an incorrectly fastened seat belt can also cause injuries, for example, in the event of an accident or when braking or changing direction suddenly.

- ▶ Always ensure that all vehicle occupants have their seat belts fastened correctly and are sitting properly.

Always observe the instructions about the correct driver's seat position and adjusting the seat (→ page 69).

In order for the correctly worn seat belt to provide the intended level of protection, each vehicle occupant must observe the following information:

- The seat belt must not be twisted and must fit tightly and snugly across the body.
- The seat belt must be routed across the centre of the shoulder and as low down across the hips as possible.
- The shoulder section of the seat belt should not touch your neck nor be routed under your arm or behind your back.
- Avoid wearing bulky clothing, e.g. a winter coat.
- Push the lap belt down as far as possible across your hips and pull tight with the shoulder section of the belt. Never route the lap belt across your abdomen.

  Pregnant women must also take particular care with this.
- Never route the seat belt across sharp, pointed, abrasive or fragile objects.
- Only one person should use each seat belt at any one time.
- Never secure objects with a seat belt if the seat belt is being used by one of the vehicle's occupants.

  Also ensure that no objects, e.g. a cushion, are ever placed between a person and the seat.

If children are travelling in the vehicle, always observe the instructions and safety notes on "Children in the vehicle" (⟶ page 38).

Always observe the instructions for loading the vehicle when securing objects, luggage or loads (⟶ page 204).

Limitations of the protection provided by the seat belt

WARNING Risk of injury or death due to incorrect seat position

The seat belt will not offer the intended level of protection if you have not moved the seat backrest to an almost vertical position.

In particular, you may slip under the seatbelt and injure yourself.

▶ Adjust the seat properly before beginning your journey.

▶ Always ensure that the seat backrest is in an almost vertical position and that the shoulder section of your seat belt is routed across the centre of your shoulder.

WARNING Risk of injury or death when additional restraint systems are not used for persons with a smaller stature

Persons under 1.50 m tall cannot wear the seat belt correctly without a suitable additional restraint system.

▶ Always secure persons under 1.50 m tall in a suitable restraint system.

WARNING Risk of injury or death due to damaged or modified seat belts

Seat belts cannot provide protection in the following situations:

- the seat belt is damaged, has been modified, is extremely dirty, bleached or dyed
- the seat belt buckle is damaged or extremely dirty
- modifications have been made to the seat belt tensioner, seat belt anchorage or seat belt retractor

Seat belts may sustain non-visible damage in an accident, e.g. due to glass splinters.

Modified or damaged seat belts could tear or fail in the event of an accident, for example.

Modified seat belt tensioners could accidentally trigger or fail to function as intended.

▶ Never modify the seat belt system, for example the seat belt, seat belt buckle, seat belt tensioner, seat belt anchorage and seat belt retractor.

▶ Make sure that the seat belts are undamaged, not worn and clean.

▶ Always have the seat belts checked immediately after an accident at a qualified specialist workshop.

Mercedes-Benz recommends that you use seat belts which have been approved for your vehicle by Mercedes-Benz.

WARNING Risk of injury or death from deployed pyrotechnic seat belt tensioners

Pyrotechnic seat belt tensioners that have been deployed are no longer operational and

are unable to perform their intended protective function.

▶ Therefore, have deployed pyrotechnic seat belt tensioners immediately replaced at a qualified specialist workshop.

Mercedes-Benz recommends that you have the vehicle towed to a qualified specialist workshop after an accident.

! **NOTE** Damage caused by trapping the seat belt

If an unused seat belt is not fully retracted, it may become trapped in the door or in the seat mechanism.

▶ Always ensure that an unused seat belt is fully retracted.

Fastening and adjusting seat belts

If the seat belt is pulled quickly or sharply, the seat belt retractor locks. The seat belt strap cannot be pulled out any further.

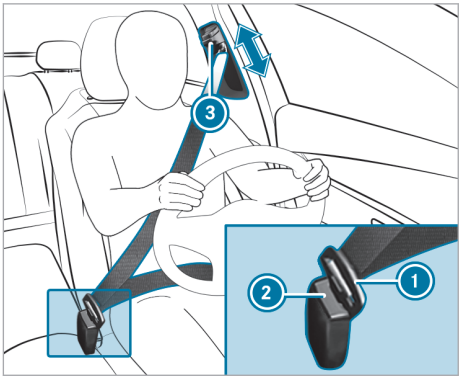

▶ Always engage seat belt tongue ① of the seat belt into seat belt buckle ② of the corresponding seat.

▶ **To adjust the seat belt height:** press button ③ on the seat belt outlet and slide the seat belt outlet to the desired position.

▶ **To engage the seat belt outlet:** release button ③ and ensure that the seat belt outlet engages.

ⓘ Only a seat belt which is worn correctly can provide the intended level of protection.

Observe the notes on fastening the seatbelt (→ page 29).

! **NOTE** Deployment of components of the restraint system when the front passenger seat is unoccupied and a seat belt is buckled

When the front passenger seat is unoccupied and the seat belt tongue of the seat belt is engaged in the seat belt buckle, components of the restraint system may deploy unnecessarily on the front passenger side, e.g. the seat belt tensioner.

▶ Only buckle the seat belts as intended.

ⓘ Observe the notes on stowage areas (→ page 204).
Information on fitting a child restraint system and on children travelling in the vehicle can be found in the "Children in the vehicle" section (→ page 41).

Seat belt adjustment function

Vehicles with PRE-SAFE®: after a front seat belt has been fastened, the automatic seat belt adjustment may apply a certain tightening force. Do not hold onto the seat belt while it is adjusting.

You can activate and deactivate the seat belt adjustment function using the multimedia system (→ page 31).

Activating or deactivating the seat belt adjustment using the multimedia system

Multimedia system:

→ ⌂ ▸▸ Settings ▸▸ Vehicle

▶ Activate or deactivate Belt adjustment.

Releasing the seat belts

▶ Press the release button in the seat belt buckle and guide the seat belt back with the seat belt tongue.

Function of the seat belt warning for driver and co-driver

The seat belt warning lamp in the instrument cluster display reminds you that all vehicle occupants must fasten their seat belts correctly.

A warning tone may also sound.

The seat belt warning goes out when the driver and co-driver fasten their seat belts.

Only for certain countries: regardless of whether the driver's and co-driver's seat belts are already fastened, the seat belt warning lamp lights up for six seconds every time the vehicle is switched on. After the vehicle is started, it goes out as soon as the driver's and the co-driver's seat belts have been fastened.

Airbags

Overview of airbags

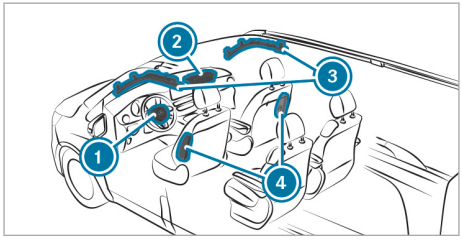

Example: vehicles with window airbag above front door

1. Driver's airbag
2. Co-driver airbag
3. Window airbag
4. Side airbag

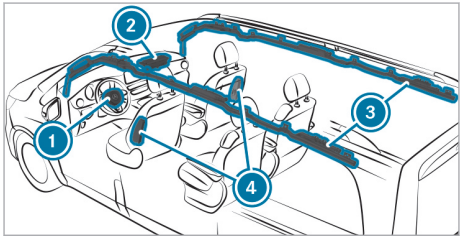

Example: vehicles with window airbag for all rows of seats

1. Driver's airbag
2. Co-driver airbag
3. Window airbag
4. Side airbag

The installation location of an airbag is identified by the AIRBAG symbol.

When enabled, an airbag can provide additional protection for the respective vehicle occupant.

Possible protection per airbag:

- Driver's airbag, co-driver airbag: head and ribcage
- Window airbag: head
- Side airbag: ribcage and pelvis

WARNING Risk of injury or death due to an enabled co-driver airbag

If the co-driver airbag is enabled, a child on the co-driver seat may be struck by the co-driver airbag during an accident.

▶ NEVER use a rearward-facing child restraint system on a seat with an ENABLED FRONT AIRBAG. DEATH or SERIOUS INJURY to the CHILD can occur.

When fitting a child restraint system to the co-driver seat, observe the vehicle-specific information (→ page 47). Also be sure to observe the notes on rearward-facing or forward-facing child restraint systems on the co-driver seat.

Information on automatic co-driver airbag shutoff
Only when the PASSENGER AIR BAG OFF indicator lamp is off can the co-driver airbag deploy in the event of an accident. If the co-driver seat is occupied, make sure, both before and during the journey, that the status of the co-driver airbag is correct (→ page 35).

NOTE Deployment of components of the restraint system when the front passenger seat is unoccupied

In an accident, the components of the restraint system may deploy unnecessarily on the front passenger side if:

- There are heavy objects on the front passenger seat.
- The seat belt tongue is engaged in the seat belt buckle of the front passenger seat and the front passenger seat is unoccupied.

▶ Stow objects in a suitable place.

▶ Only one person should use each seat belt at any one time.

Protection provided by the airbags

Depending on the accident situation, an airbag may supplement the protection offered by a correctly fastened seat belt.

WARNING Risk of injury or death due to an incorrect seat position

If you deviate from the correct seat position, the airbag cannot perform its intended protective function.

Each vehicle occupant must make sure of the following:

- Fasten seat belts correctly. Pregnant women must take particular care to ensure that the lap belt never lies across the abdomen.
- Adopt the correct seat position and keep as far away as possible from the airbags.
- Observe the following information.

▶ Always make sure that there are no objects between the airbag and vehicle occupant.

To avoid the risks resulting from the deployment of an airbag, each vehicle occupant must observe the following information in particular:

- Before starting your journey, adjust your seat correctly; both the driver's and co-driver seat should be moved as far back as possible.

  When doing so, always observe the information on the correct driver's seat position (→ page 69).
- Only hold the steering wheel by the steering wheel rim. This allows the airbag to be fully deployed.
- Always lean against the seat backrest when the vehicle is in motion. Do not lean forwards or against the door or side window. You may otherwise be in the deployment area of the airbags.
- Always keep your feet on the floor. Do not put your feet on the cockpit, for example. Your feet may otherwise be in the deployment area of the airbag.
- If children are travelling in the vehicle, observe the additional notes (→ page 38).
- Always stow and secure objects correctly.

Objects in the vehicle interior may prevent an airbag from functioning correctly. Each vehicle occupant must always make sure of the following in particular:

- There are no people, animals or objects between the vehicle occupants and an airbag.
- There are no objects between the seat, door and door pillar (B-pillar).
- There are no hard objects, e.g. coat hangers, hanging on the grab handles or coat hooks.
- There are no accessories, such as mobile navigation devices, mobile phones or cup holders, within the deployment area of an airbag, e.g. on the cockpit, on the door, on the side window or on the side trim.

  In addition, no connecting cables, tensioning straps or retaining straps must be routed or attached to the vehicle within the deployment area of an airbag. Always comply with the accessory manufacturer's installation instructions and, in particular, the notes on suitable places for installation.
- There are no heavy, sharp-edged or fragile objects in the pockets of your clothing. Store such objects in a suitable place.

Limitations of the protection provided by airbags

WARNING Risk of injury due to modifications to the cover of an airbag

If you modify the cover of an airbag or affix objects such as stickers to it, the airbag can no longer function as intended.

▶ Never modify the cover of an airbag.

▶ Do not attach any objects to the cover.

The installation location of an airbag is identified by the AIRBAG symbol (→ page 32).

Objects in the deployment area of an airbag may prevent the airbag from functioning correctly.

WARNING Risk of injury from objects in the deployment area of an airbag

Objects in the deployment area of an airbag can hinder or prevent the correct deployment of the airbag.

The airbag may then deploy in an uncontrolled manner and may even cause additional injuries to the vehicle occupants by deploying. This

may be the case in particular if the airbag is integrated into the seat.

- Always stow and secure objects correctly.
- Before commencing your journey, make sure that no objects are stowed in the deployment area of an airbag.

WARNING Risk of injury or death due to unsuitable protective covers

Due to unsuitable protective covers, the airbags cannot protect vehicle occupants as they are designed to do.

- You should only use protective covers that have been approved for the corresponding seat by Mercedes-Benz.

In addition, the function of the automatic co-driver airbag shutoff could be restricted due to an unsuitable protective cover. If the co-driver seat is occupied, ensure that the PASSENGER AIR BAG indicator lamp displays the correct status of the co-driver airbag (→ page 35).

Vehicles with window airbags in all rows of seats:

WARNING Risk of injury due to malfunctioning sensors in the door

The function of the airbags can be impaired due to modifications or incorrect work performed on the doors or door trim, or if the doors are damaged.

- Never modify the doors or parts of the doors.
- Always have work on the doors or door trim carried out at a qualified specialist workshop.

WARNING Risk of injury due to deployed airbag

A deployed airbag no longer offers any protection.

- Have the vehicle towed to a qualified specialist workshop in order to have the deployed airbag replaced.

Have deployed airbags replaced immediately.

Status of the co-driver airbag

Function of automatic co-driver airbag shutoff

The automatic co-driver airbag shutoff is able to detect whether the co-driver seat is occupied by a person or a child restraint system. The co-driver airbag is enabled or disabled accordingly.

WARNING Risk of potentially fatal injuries due to objects trapped under the front passenger seat

Objects trapped under the front passenger seat may interfere with the function of the automatic front passenger airbag shutoff or damage the system.

- Do not stow any objects under the front passenger seat.
- When the front passenger seat is occupied, ensure that no objects have become trapped beneath the front passenger seat.

When fitting a child restraint system to the co-driver seat, observe the vehicle-specific information (→ page 47). Also be sure to observe the notes on rearward-facing or forward-facing child restraint systems on the co-driver seat (→ page 47).

WARNING Risk of injury or death due to objects between the seat surface and the child restraint system

Objects between the seat surface and the child restraint system could affect the function of the automatic co-driver airbag shutoff.

- Do not place any objects between the seat surface and the child restraint system.
- Make sure that the entire base of the child restraint system is always resting on the seat surface of the co-driver seat.
- The backrest of the forward-facing child restraint system must, as far as possible, be resting on the seat backrest of the co-driver seat.
- It is essential to comply with the child restraint system manufacturer's installation instructions.

A person on the co-driver seat must observe the following information:

- Fasten seat belts correctly (→ page 29).
- Sit in an almost upright seat position with their back against the seat backrest.
- Sit with their feet resting on the floor, if possible.

The co-driver airbag may otherwise be disabled by mistake, for example, in the following situations:

- The co-driver transfers their weight by supporting themselves on a vehicle armrest.
- The co-driver sits in such a way that their weight is raised from the seat surface.

WARNING Risk of injury or death due to a disabled front passenger airbag

The front passenger airbag is disabled when the PASSENGER AIR BAG OFF indicator lamp is lit.

A person in the front passenger seat could then, for example, come into contact with the vehicle interior, especially if the person is sitting too close to the cockpit.

If the front passenger seat is occupied, always ensure that:

- the classification of the person in the front passenger seat is correct and the front passenger airbag is enabled or disabled in accordance with the person in the front passenger seat.
- the front passenger seat has been moved as far back as possible.
- the person is seated correctly.

▶ Both before and during the journey, ensure that the status of the front passenger airbag is correct.

If the co-driver seat is occupied, the classification of the person or child restraint system on the co-driver seat takes place after the co-driver airbag shutoff self-test. The PASSENGER AIR BAG OFF indicator lamp displays the status of the co-driver airbag.

Always observe the notes on the function of the indicator lamp PASSENGER AIR BAG OFF (→ page 35).

Function of the PASSENGER AIR BAG indicator lamp

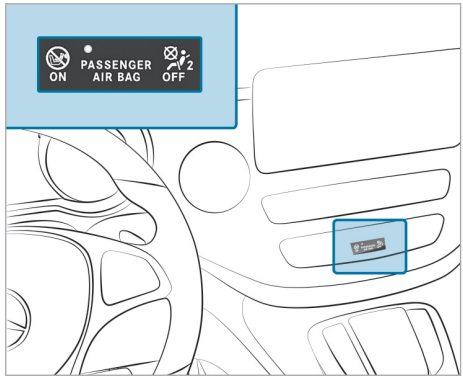

The PASSENGER AIR BAG ON indicator lamp is inoperative. When the vehicle is switched on, it lights up briefly and then goes out again. Only the PASSENGER AIR BAG OFF indicator lamp displays the status of the co-driver airbag. The PASSENGER AIR BAG OFF indicator lamp may be lit continuously or be off.

Vehicles without automatic co-driver airbag shutoff have a special sticker affixed to the side of the cockpit on the co-driver side (→ page 47).

Self-test of the automatic co-driver airbag shutoff

When the vehicle is switched on, a self-test is performed during which the PASSENGER AIR BAG OFF indicator lamp lights up for approximately six seconds.

The status of the co-driver airbag is displayed after the self-test:

- PASSENGER AIR BAG OFF is not lit: the co-driver airbag may deploy during an accident.
- PASSENGER AIR BAG OFF lights up continuously: the co-driver airbag is disabled. It will then not be deployed in the event of an accident.

If the PASSENGER AIR BAG OFF indicator lamp and the restraint system warning lamp light up simultaneously, the co-driver seat may not be used. Also in this case, do not fit a child restraint system to the co-driver seat. Have the automatic co-driver airbag shutoff checked and repaired immediately at a qualified specialist workshop.

Status display

If the co-driver seat is occupied, ensure, both before and during the journey, that the status of

the co-driver airbag is correct for the current situation.

After fitting a rearward-facing child restraint system to the co-driver seat: PASSENGER AIR BAG OFF must be lit continuously.

⚠ **WARNING** Risk of injury or death when using a rearward-facing child restraint system while the front passenger airbag is enabled

If you secure a child in a rearward-facing child restraint system on the front passenger seat and the PASSENGER AIR BAG OFF indicator lamp is off, the front passenger airbag can deploy in the event of an accident.

The child could be struck by the airbag.

▶ Always ensure that the front passenger airbag is disabled. The PASSENGER AIR BAG OFF indicator lamp must be lit.

▶ NEVER use a rearward-facing child restraint system on a seat with an ENABLED FRONT AIRBAG. This can result in the DEATH of or SERIOUS INJURY to the CHILD.

When fitting a child restraint system to the co-driver seat, observe the vehicle-specific information (→ page 47).

Depending on the child restraint system and the stature of the child, the PASSENGER AIR BAG OFF indicator lamp may be off. In this case, do not fit the rearward-facing child restraint system to the co-driver seat.

Instead, fit the rearward-facing child restraint system to a suitable rear seat.

After fitting a forward-facing child restraint system to the co-driver seat: depending on the child restraint system and the stature of the child, PASSENGER AIR BAG OFF may be lit continuously or be off. Always observe the following information.

⚠ **WARNING** Risk of injury or death due to incorrect positioning of the child restraint system

If you secure a child in a forward-facing child restraint system on the co-driver seat and you position the co-driver seat too close to the dashboard, in the event of an accident, the child could:

- come into contact with the vehicle's interior if the PASSENGER AIR BAG OFF indicator lamp is lit, for example
- be struck by the airbag if the PASSENGER AIR BAG OFF indicator lamp is off

▶ Always move the co-driver seat as far back as possible. In doing so, always make sure that the shoulder belt strap is correctly routed from the seat belt outlet of the vehicle to the shoulder belt guide on the child restraint system. The shoulder belt strap must be routed forwards and downwards from the seat belt outlet. If necessary, adjust the seat belt outlet and the co-driver seat accordingly.

▶ Always comply with the child restraint system manufacturer's installation instructions.

When fitting a child restraint system to the co-driver seat, observe the vehicle-specific information (→ page 47).

If a person is sitting on the co-driver seat: PASSENGER AIR BAG OFF may be lit continuously or be off, depending on the person's stature.

A person on the co-driver seat must always observe the following information:

- If the co-driver seat is occupied by an adult or a person with a stature corresponding to that of an adult, the PASSENGER AIR BAG OFF indicator lamp must be off. This indicates that the co-driver airbag is enabled.

  If the PASSENGER AIR BAG OFF indicator lamp is lit continuously, an adult or person with a build corresponding to that of an adult must not use the co-driver seat.

  Instead, they should use a rear seat.
- If the co-driver seat is occupied by a person of smaller stature (e.g. a teenager or small adult), the PASSENGER AIR BAG OFF indicator lamp is

either lit continuously or remains off, depending on the classification.

- If the PASSENGER AIR BAG OFF indicator lamp is off: move the co-driver seat as far back as possible, or the person of smaller stature should use a rear seat.
- If the PASSENGER AIR BAG OFF indicator lamp is lit continuously: the person of smaller stature should not use the co-driver seat.

WARNING Risk of injury or death when the PASSENGER AIR BAG OFF indicator lamp is lit

If the PASSENGER AIR BAG OFF indicator lamp remains lit after the self-test, the front passenger airbag is disabled.

If the front passenger seat is occupied, always ensure that:

- The classification of the person in the front passenger seat is correct and the front passenger airbag is enabled or disabled in accordance with the person in the front passenger seat.
- The person is seated properly with a correctly fastened seat belt.
- The front passenger seat has been moved as far back as possible.

Be sure to also observe the following further related subjects:

- Child restraint system on the co-driver seat (→ page 47)
- Suitable positioning of the child restraint system (→ page 41)

PRE-SAFE® System

Function of PRE-SAFE® (anticipatory occupant protection)

PRE-SAFE® can detect certain hazardous situations and take pre-emptive measures to protect the vehicle occupants.

PRE-SAFE® can implement the following measures independently of each other:

- Tightening the seat belts on the driver's seat and co-driver seat.
- Closing the side windows.
- **Vehicles with a sliding sunroof:** closing the sliding sunroof.
- **Vehicles with memory function:** adjusting the co-driver seat to a more favourable seat position.

NOTE Damage caused by objects in the footwell or behind the seat

The automatic adjustment of the seat position may result in damage to the seat and/or the object.

▶ Stow objects in a suitable place.

Reversing the PRE-SAFE® system measures

If an accident did not occur, the pre-emptive measures that were taken are reversed.

You will need to make certain adjustments yourself.

▶ If the seat belt pre-tensioning is not reduced, move the seat backrest back slightly.
The locking mechanism releases.

Automatic measures after an accident

Depending on the type and severity of the accident, and depending on the vehicle's equipment, the following measures can be implemented, for example:

- activating the hazard warning lights
- triggering an automatic emergency call (→ page 223)
- switching off the drive system and high-voltage on-board electrical system
- unlocking the vehicle doors
- lowering the front side windows
- switching on the interior lighting

Safely transporting children in the vehicle

Always observe when children are travelling in the vehicle

ⓘ Always observe the safety notes relevant to the situation. In doing so, you will be able to identify possible risks and avoid dangers when children are travelling in the vehicle (→ page 38).

Be diligent

Bear in mind that negligence when securing a child in the child restraint system may have serious consequences. Always be diligent and secure a child carefully before each journey.

Infants and children must never travel sitting on the lap of a vehicle occupant.

To improve protection for children younger than 12 years old or under 1.50 m in height, Mercedes-Benz recommends you observe the following information:

- Always secure the child in a child restraint system suitable for this Mercedes-Benz vehicle.
- The child restraint system must be appropriate to the age, weight and size of the child.
- The vehicle seat must be suitable for fitting a child restraint system (→ page 41).

Accident statistics show that children secured on the rear seats are generally safer than children secured on the front seats. For this reason, Mercedes-Benz strongly advises that you fit a child restraint system to a rear seat.

The generic term child restraint system

The generic term child restraint system is used in these Operating Instructions. A child restraint system is, for example:

- a baby car seat
- a rearward-facing child seat
- a forward-facing child seat
- a child booster seat with a backrest and seat belt guides

The child restraint system must be appropriate to the age, weight and size of the child.

Observe laws and regulations

Always observe the legal requirements when using a child restraint system in the vehicle.

Make sure that the child restraint system is approved in accordance with the valid test specifications and guidelines. You can obtain further information at a qualified specialist workshop. Mercedes-Benz recommends that you use a Mercedes-Benz Service Centre for this purpose.

Only use approved child restraint systems

Only child restraint systems with the UNECE standard UN-R44 are approved for use in the vehicle.

Information on child restraint system approval categories and details on the approval label on the child restraint system (→ page 41).

Detecting risks, avoiding danger

Securing systems for child restraint systems in the vehicle

Only use the following securing systems for child restraint systems:

- the ISOFIX securing rings
- the seat belt system of the vehicle
- the Top Tether anchorages

Fitting an ISOFIX child restraint system is preferred.

Simply attaching to the securing rings on the vehicle can reduce the risk of fitting the child restraint system incorrectly.

When securing a child with the integrated seat belt of the ISOFIX child restraint system, always comply with the permissible gross weight for the child and child restraint system (→ page 43).

Advantage of a rearward-facing child restraint system

It is preferable to transport a baby or a small child in a suitable rearward-facing child restraint system. In this case, the child sits in the opposite direction to the direction of travel and faces backwards.

Babies and small children have comparatively weak neck muscles in relation to the size and weight of their head. The risk of injury to the cervical spine during an accident can be reduced in a rearward-facing child restraint system.

Always secure a child restraint system correctly

⚠ **WARNING** Risk of injury or death due to incorrect installation of the child restraint system

The child can then not be protected or restrained as intended.

- ▶ Be sure to comply with the manufacturer's installation instructions for the child restraint system and its correct use.
- ▶ Make sure that the entire base of the child restraint system always rests on the sitting surface of the seat.
- ▶ Never place objects (e.g. cushions) under or behind the child restraint system.
- ▶ Use child restraint systems only with the original cover designed for them.

▶ Always replace damaged covers with genuine covers.

⚠ **WARNING** Risk of injury or death due to unsecured child restraint systems in the vehicle

If the child restraint system is incorrectly fitted or not secured, it can become detached.

The child cannot then be protected or restrained as intended.

The unused child restraint system can be become detached and strike vehicle occupants.

▶ Always comply with the manufacturer's installation instructions for the child restraint system and its correct use.

▶ Always fit child restraint systems correctly, even if they are transported unused in the vehicle.

- Always observe the child restraint system manufacturer's installation and operating instructions as well as the vehicle-specific information:
  - Fitting the ISOFIX child restraint system on the rear seat (→ page 43).
  - Securing the child restraint system with the seat belt on the rear seat (→ page 46).
  - Securing the child restraint system with the seat belt on the co-driver seat (→ page 47). Observe the specific instructions for the rearward-facing and forward-facing child restraint systems (→ page 47).

    If the co-driver seat is occupied, ensure, both before and during the journey, that the status of the co-driver airbag is correct for the current situation (→ page 35).
- Observe the warning labels in the vehicle interior and on the child restraint system.
- Also secure Top Tether if present.

Do not modify the child restraint system

⚠ **WARNING** Risk of injury due to modifications to the child restraint system

The child restraint system can no longer function properly. This poses an increased risk of injury.

▶ Never modify a child restraint system.

▶ Only affix accessories which have been specially approved for this child restraint system by the child restraint system's manufacturer.

Mercedes-Benz recommends Mercedes-Benz care products for cleaning child restraint systems recommended by Mercedes-Benz.

Only use child restraint systems which are in proper working condition

⚠ **WARNING** Risk of injury or death caused by the use of damaged child restraint systems

Child restraint systems or their retaining systems that have been subjected to stress in an accident may not be able to perform their intended protective function.

It may be the case that the child cannot be properly restrained.

▶ Always immediately replace child restraint systems that have been damaged or involved in an accident.

▶ Have the securing systems for the child restraint systems checked at a qualified specialist workshop before installing a child restraint system again.

Avoid direct sunlight

⚠ **WARNING** Risk of burns when the child seat is exposed to direct sunlight

If the child restraint system is exposed to direct sunlight or heat, parts could heat up.

Children could suffer burns from these parts, particularly on metallic parts of the child restraint system.

▶ Always make sure that the child restraint system is not exposed to direct sunlight.

▶ Protect the child restraint system with a blanket, for example.

▶ If the child restraint system has been exposed to direct sunlight, allow it to cool before securing a child into it.

▶ Never leave children unattended in the vehicle.

Observe when stopping or parking

WARNING Accident- and risk of injury with unsupervised children in the vehicle

If you leave children unattended in the vehicle, they can in particular

- Open doors and thereby endanger other persons or road users.
- get out of the car and are hit by traffic.
- Operate vehicle equipment and become trapped, forexample.

In addition, the children could also set the vehicle in motion, for exampleby:

- releasing the parking brake.
- change the gearbox setting.
- start the vehicle.

▶ Never leave children unattended in the vehicle.

▶ When leaving the vehicle, always take the SmartKey with you and lock the vehicle.

▶ Keep the key out of reach of children.

Overview of recommended child restraint systems

ⓘ Further information on the correct child restraint system can be obtained at a qualified specialist workshop. Mercedes-Benz recommends that you use a Mercedes-Benz Service Centre for this purpose.

Securing with ISOFIX

Weight category 0+ (up to 13 kg and up to approx. 15 months)

Type[1]	BABY SAFE plus (including base)
Size categories	E
Approval	E1 04 301 146
Order number[2]	B6 6 86 8224
1 Manufacturer: Britax Römer.	2 With colour code 9H95.

Weight category I (9 to 18 kg and from approximately 9 months to 4 years)

Type[1]	DUO plus
Size categories	B1
Approval	E1 04 301 133
Order number[2]	A 000 970 43 02
1 Manufacturer: Britax Römer.	2 With colour code 9H95.

Securing with the seat belt on the vehicle seat

Weight category 0 (up to 10 kg and approximately 6 months) and weight category 0+ (up to 13 kg and approximately 15 months)

Type[1]	BABY SAFE plus II
Approval	E1 04 301 146
Order number[2]	A 000 970 38 02
1 Manufacturer: Britax Römer.	2 With colour code 9H95.

R129 child restraint system (weight up to 13 kg, height from 40 to 83 cm, and aged up to about 15 months)

Type[1]	Baby Safe 3 i-Size
Size categories	R2
Approval	E1*129R03/04*0060*02
Order number	A000 970 68 02
1 Manufacturer: Britax Römer.	

Weight category I (9 to 18 kg and from approximately 9 months to 4 years)

Type[1]	DUO plus
Approval	E1 04 301 133
Order number[2]	A 000 970 43 02
1 Manufacturer: Britax Römer.	2 With colour code 9H95.

Weight category II/III (15 to 36 kg and from approximately 3 to 12 years)

Type[1]	KIDFIX XP
Approval	E1 04 301 304
Order number[2]	A 000 970 49 02
Type[1]	**AMG KIDFIX XP**
Approval	E1 04 301 304
Order number[2]	A 000 970 33 02
1 Manufacturer: Britax Römer.	2 With colour code 9H95.

R129 child restraint systems (weight from 15 to 36 kg, height from 100 to 150 cm, and aged 3.5 to 12 years)

Type[1]	KIDFIX M i-Size
Size categories	B2
Approval	E1*129R03/04*0061 *02
Order number	A 000 970 89 02
1 Manufacturer: Britax Römer.	
Type[1]	**AMG KIDFIX M i-Size**
Size categories	B2
Approval	E1*129R03/04*0061 *02
Order number	A 000 970 91 02
1 Manufacturer: Britax Römer.	

Overview of suitable seats in the vehicle for fitting a child restraint system

Left/right rear seat (second and third seat row)

Preferred securing system:

ISOFIX/LATCH child seat anchor (→ page 42)

Also secure Top Tether if present (→ page 44).

Alternative securing system:

Seat belt on vehicle seat (→ page 45)

Co-driver seat

Securing system:

Seat belt on vehicle seat (→ page 45)

Always observe the following:

- If the co-driver seat is occupied, ensure, both before and during the journey, that the status of the co-driver airbag is correct for the current situation (→ page 35).
- Observe the notes on automatic co-driver airbag shutoff (→ page 34).

Centre rear seat (second and third seat row)

Securing system:

Seat belt on vehicle seat (→ page 45)

Also secure Top Tether if present (→ page 44).

Approval categories for child restraint systems

Only use approved child restraint systems

Only child restraint systems with the UNECE standard UN-R44 are approved for use in the vehicle.

Identification on the child restraint system

Information about the approval category, weight category and approval number, forexample, is on the approval label on the child restraint system.

There may be further information suchas the ISO-FIX size categories, depending on the approval category of the child restraint system.

Approval categories under UN-R44

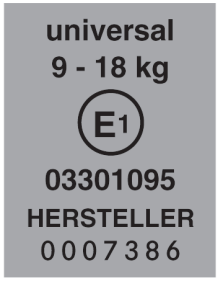

Example of an approval label

- **Universal:** child restraint systems in the "Universal" category are approved for installation in

vehicles. They can be used, following overviews of the suitability of seats for securing child restraint systems, on seats labelled U, UF or IUF.

The IUF label refers to an ISOFIX child restraint system in the "Universal" category. These child restraint systems must also be secured using Top Tether or support points.

- **Semi-Universal:** child restraint systems in the "Semi-Universal" category may only be used if the vehicle and vehicle seat are listed in the child restraint system manufacturer's vehicle model list.
- **Vehicle-specific:** child restraint systems in the "Vehicle-specific" category may only be used if the vehicle and vehicle seat are listed in the child restraint system manufacturer's vehicle model list.

Please note the suitability of the vehicle seats

Depending on the approval category, there are forward-facing and rearward-facing child restraint systems. Their use may be restricted for certain vehicle seats.

- Suitability of seats for attaching ISOFIX child restraint systems (→ page 42)
- Suitability of seats for attaching belt-secured child restraint systems (→ page 45)

Fitting an ISOFIX child restraint system on the rear seat

Overview of suitability of the seats for attaching ISOFIX child restraint systems

	ISOFIX designation
	ISOFIX is a standardised securing system for special restraint systems. • The symbol indicates seats suitable for attaching an ISOFIX child restraint system in accordance with UN R44 (→ page 41). • Attach only child restraint systems that are approved in accordance with UN R44 as per the following ISOFIX tables.

Size class:	Equipment:	Rear seat/rear bench seat	
Carry cot			
F	ISO/L1	X (rear seat)	IL[1] (rear bench seat)
G	ISO/L2	X (rear seat)	IL[2, 3] (rear bench seat)

Size class:	Equipment:	Rear seat/rear bench seat
Weight group 0 (up to 10 kg and up to approx. 6 months)		
E	ISO/R1	IL[2, 3]
Weight group 0+ (up to 13 kg and up to approx. 15 months)		
E	ISO/R1	IL[2, 3]
D	ISO/R2	IL[2, 3]
C	ISO/R3	IL[2, 3, 4]
Weight group 1 (9–18 kg and approx. 9 months to 4 years)		
D	ISO/R2	IL[2, 3]
C	ISO/R3	IL[2, 3, 4]
B	ISO/F2	IUF
B1	ISO/F2X	IUF
A	ISO/F3	IUF

X Not suitable for an ISOFIX child restraint system in this weight group and/or size class.

IL Suitable for ISOFIX child restraint systems according to the table in "Overview of the recommended child restraint systems", or if the vehicle and the seat are listed on the child restraint system manufacturer's vehicle model list.

IUF Suitable for forward-facing ISOFIX child restraint systems of the "Universal" category in this weight group.

1 Only on the first rear seat row on a rear bench seat

2 The seat must be installed in the direction of travel.

3 It is permissible to use a seat on the second rear seat row only if the maximum distance between the two rear seat rows is set. To this end, the seat on the second rear seat row must be fitted in the rearmost position allowed and the seat on the first rear seat row in front of it must be fitted in the foremost position allowed. If you use the centre seat on the second rear seat row, all seats on the first rear seat row must be fitted in the foremost position allowed.

4 If you are using a child restraint system in size class C (ISO/R3), make sure that the seat backrest of the front seat is not in contact with the child restraint system. If possible, move the front seat to the highest position and the seat backrest to the upright position.

Fitting an ISOFIX child restraint system on the rear seat

WARNING Risk of injury or death if the permissible gross mass of the child and child restraint system together is exceeded.

Too much load may be placed on the ISOFIX or iSize child restraint systems and the child may not be restrained correctly in the event of an accident, for example.

▶ If the child is secured in an ISOFIX child restraint system with integrated seat belt, the total mass of the child and child restraint system must not exceed 33 kg.

Always comply with the information about the mass of the child:

- In the manufacturer's installation and Owner's Manual for the child restraint system used
- On a label on the child restraint system, if available

Regularly check that the permissible gross weight of the child and child restraint system is still complied with.

When you install a child restraint system, observe the following:

- ☑ Always observe the correct use and suitability of the seats for attaching a child restraint system.

  ISOFIX child seat anchor (→ page 42)
- ☑ Always observe the manufacturer's installation and Owner's Manual for the child restraint system used.
- ☑ Make sure that the child's feet do not touch the front seat. If necessary, move the front seat slightly forwards.

When fitting an ISOFIX child restraint system, also observe the following:

- ☑ **When using a Group 0/0+ baby car seat and a Group 1 rearward-facing child restraint system on a rear seat:** adjust the front seat so that the seat does not touch the child restraint system.
- ☑ Move the rear seat backrest to an upright position before you fit the child seat. Do not adjust the seat backrest when an ISOFIX child restraint system is fitted.
- ☑ For certain child restraint systems in weight category II or III, there may be restrictions on the maximum size setting, e.g. due to possible contact with the roof.
- ☑ Do not put the child restraint system under strain between the roof and the sitting surface and/or fit it facing the wrong direction.
- ☑ Do not put the child restraint system under strain by the head restraint. Adjust the head restraints as appropriate.

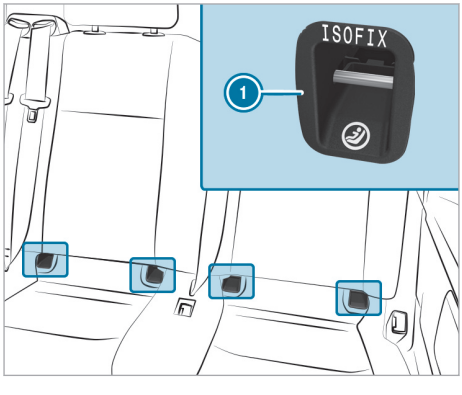

① ISOFIX mounting brackets

Before every journey, make sure that the ISOFIX child restraint system is engaged correctly in both mounting brackets in the vehicle.

> **!** **NOTE** Damage to the seat belt for the centre seat during installation of the child restraint system
>
> ▶ Make sure that the seat belt is not trapped.

▶ Attach the ISOFIX child restraint system to both mounting brackets ① in the vehicle.

Securing Top Tether

> **!** **NOTE** Damage to the single rear seat when you use the EASY ENTRY easy entry and exit feature and a child restraint system secured using Top Tether
>
> If a child restraint system is secured using Top Tether and the EASY ENTRY easy entry and exit feature is used, the single rear seat may be damaged.
>
> ▶ Before you use the EASY ENTRY easy entry and exit feature, unhook the Top Tether hook from the anchorage.

If the child restraint system is equipped with a Top Tether belt:

The risk of injury can be reduced by Top Tether. The Top Tether belt enables an additional connection between the child restraint system attached with ISOFIX and the vehicle.

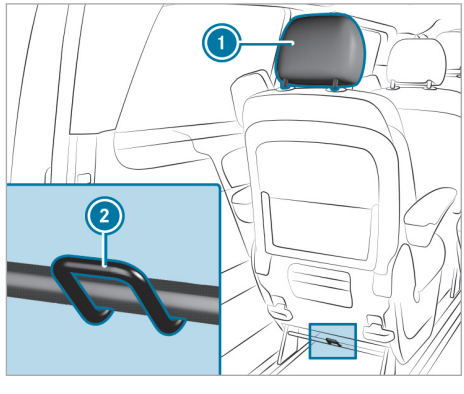

Example

Top Tether anchorage ② is on the lower part of the rear seat on the cross strut between the seats or bench seat legs.

▶ Fit the ISOFIX child restraint system with Top Tether. Comply with the child restraint system manufacturer's installation instructions.

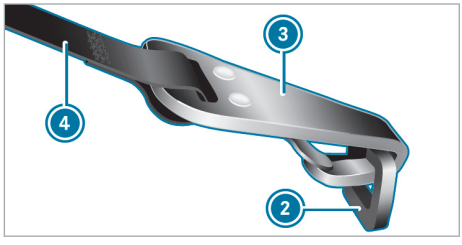

▶ Guide Top Tether belt ④ under head restraint ① between the two head restraint bars.

▶ Hook Top Tether hook ③ into Top Tether anchorage ② without twisting.

▶ Tension Top Tether belt ④. Comply with the child restraint system manufacturer's installation instructions.

Securing the child restraint system with the seat belt

Notes on the suitability of seats for attaching belt-secured child restraint systems

Suitability of seats for attaching belt-secured child restraint systems

Rear seats

Weight category 0: up to 10 kg	
Rear seat	U[1]
Rear bench seat	U[1], L[1]
Weight category 0+: up to 13 kg	
Rear seat	U[1]
Rear bench seat	U[1], L[1]
Weight category I: 9 to 18 kg	
Rear seat	U[1], L[1]
Rear bench seat	U[1], L[1]
Weight category II: 15 to 25 kg	
Rear seat	U, L
Rear bench seat	U, L
Weight category III: 22 to 36 kg	
Rear seat	U, L
Rear bench seat	U, L
U Suitable for child restraint systems of the "Universal" category in this weight category.	
L Suitable for semi-universal child restraint systems according to the table in "Recommended child restraint systems", or if the vehicle and the seat are listed in the child restraint system manufacturer's vehicle model list.	
1 The seat must be installed in the direction of travel.	

Co-driver seat – Notes

Notes on child restraint systems on the co-driver seat

- If it is absolutely necessary for you to fit a child restraint system to the co-driver seat, be sure to observe the information on child restraint systems on the co-driver seat (→ page 47).
- Observe the specific instructions for the rearward-facing and forward-facing child restraint systems. If the co-driver seat is occupied, ensure, both before and during the journey, that the status of the co-driver airbag is correct for the current situation (→ page 35).

Co-driver seat/co-driver bench seat

Weight category 0: up to 10 kg	
Co-driver airbag enabled	X
Co-driver airbag disabled[1]	U[2], L
Weight category 0+: up to 13 kg	
Co-driver airbag enabled	X
Co-driver airbag disabled[1]	U[2], L
Weight category I: 9 to 18 kg	

Co-driver airbag enabled	UF[2], L
Co-driver airbag disabled[1]	U[2], L
Weight category II: 15 to 25 kg	
Co-driver airbag enabled	UF[2], L
Co-driver airbag disabled[1]	U[2], L
Weight category III: 22 to 36 kg	
Co-driver airbag enabled	UF[2], L
Co-driver airbag disabled[1]	U[2], L

X Not suitable for children in this weight category.

U Suitable for child restraint systems of the "Universal" category in this weight category.

UF Suitable for forward-facing child restraint systems of the "Universal" category in this weight category.

L Suitable for semi-universal child restraint systems according to the table in "Recommended child restraint systems", or if the vehicle and the seat are listed in the child restraint system manufacturer's vehicle model list.

1 The vehicle is equipped with automatic co-driver airbag shutoff. The PASSENGER AIR BAG OFF indicator lamp must be lit.

2 In combination with a long seat belt buckle (police seat) not suitable for child restraint systems.

Securing the child restraint system with the seat belt on the rear seat

When fitting a belt-secured child restraint system, observe the following:

- ☑ Always observe the manufacturer's installation and operating instructions for the child restraint system used.
- ☑ For a child restraint system in the "Universal" or "Semi-Universal" category, make sure that the system has been approved for the vehicle seat.

  Observe the notes under "Suitability of seats for attaching belt-secured child restraint systems" (→ page 45).
- ☑ **When using a baby car seat in weight category 0/0+ and a rearward-facing child restraint system in weight category I on a rear seat:** adjust the front seat so that the seat does not touch the child restraint system.
- ☑ **When using a forward-facing child restraint system in weight category I:** remove the head restraint from the respective seat, if possible.

  After the child restraint system has been removed, replace the head restraint immediately and adjust all head restraints correctly.
- ☑ The backrest of the forward-facing child restraint system must, as far as possible, be resting on the seat backrest of the rear seat.
- ☑ For certain child restraint systems in weight category II or III, there may be restrictions on the maximum size setting, e.g. due to possible contact with the roof.
- ☑ The child restraint system must not be put under strain between the roof and the seat cushion and/or be fitted facing the wrong direction. Where possible, adjust the seat cushion inclination accordingly.
- ☑ The child restraint system must not be put under strain by the head restraint. Adjust the head restraints as appropriate.
- ☑ Make sure that the child's feet do not touch the front seat. If necessary, move the front seat slightly forwards.

▶ Install the child restraint system.
The entire base of the child restraint system must always rest on the sitting surface of the rear seat.

▶ Always make sure that the shoulder belt strap is correctly routed from the seat belt outlet of the vehicle to the shoulder belt guide on the child restraint system.
The shoulder belt strap must be routed forwards and downwards from the seat belt outlet.

Notes on vehicles without automatic co-driver airbag shutoff

The sticker is visible when the co-driver door is open:

Vehicles without automatic co-driver airbag shutoff have a special sticker affixed to the side of the cockpit on the co-driver side.

If you turn the key to position 2 in the ignition lock, the PASSENGER AIR BAG OFF and PASSENGER AIR BAG ON indicator lamps light up briefly. However, they have no function and are not an indication of the automatic co-driver airbag shutoff.

Be sure to observe the following notes:

- Never fit a rearward-facing child restraint system to the co-driver seat.
- Always fit a rearward-facing child restraint system to a suitable rear seat
  - Suitability of seats for attaching belt-secured child restraint systems (→ page 45)
  - Securing the child restraint system with the seat belt on the rear seat (→ page 46)
- Notes on rearward-facing and forward-facing child restraint systems on the co-driver seat (→ page 47)

Notes on rearward-facing and forward-facing child restraint systems on the co-driver seat

WARNING Risk of injury or death when using a child restraint system while the co-driver airbag is enabled

If you secure a child in a child restraint system on the co-driver seat and the PASSENGER AIR BAG OFF indicator lamp is off, the co-driver airbag can deploy in the event of an accident.

The child could be struck by the airbag.

▶ Always ensure that the co-driver airbag is disabled. The PASSENGER AIR BAG OFF indicator lamp must be lit.

NEVER use a rearward facing child restraint on a seat protected by an ENABLED AIRBAG in front of it, DEATH or SERIOUS INJURY to the CHILD may occur.

Observe the specific instructions for the rearward-facing and forward-facing child restraint systems (→ page 47).

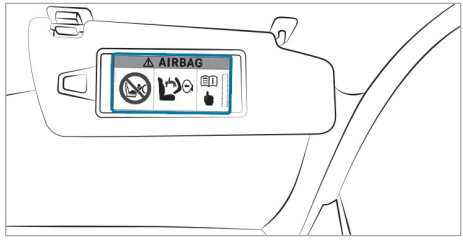

Warning notice on the co-driver sun visor

Always observe the status of the co-driver airbag on the PASSENGER AIR BAG OFF indicator

- If it is absolutely necessary to fit a child restraint system to the co-driver seat, always observe the information on automatic co-driver airbag shutoff (→ page 34).
- When using a rearward-facing child restraint system on the co-driver seat, the co-driver airbag must always be disabled. It is only disabled if the PASSENGER AIR BAG OFF indicator lamp is continuously lit (→ page 35).
- If the PASSENGER AIR BAG OFF indicator lamp is off, the co-driver airbag is enabled. The co-driver airbag may deploy during an accident.

Securing the child restraint system with the seat belt on the co-driver seat

When fitting a belt-secured child restraint system on the co-driver seat, always observe the following:

☑ Observe the notes on rearward-facing and forward-facing child restraint systems on the co-driver seat (→ page 47).

☑ Observe the child restraint system manufacturer's installation and operating instructions.

- ☑ For a child restraint system in the "Universal" or "Semi-Universal" category, make sure that the system has been approved for the vehicle seat.

  Observe the notes under "Suitability of seats for attaching belt-secured child restraint systems" (→ page 45).
- ☑ When using a forward-facing child restraint system in category I: remove the head restraint from the respective seat, if possible.

  After the child restraint system has been removed, replace the head restraint immediately and adjust all head restraints correctly.
- ☑ The backrest of the forward-facing child restraint system must, as far as possible, be resting on the seat backrest of the co-driver seat.
- ☑ For certain child restraint systems in weight category II or III, there may be restrictions on the maximum size setting, e.g. due to possible contact with the roof.
- ☑ The child restraint system must not be put under strain between the roof and the seat cushion and/or be fitted facing the wrong direction.
- ☑ The child restraint system must not be put under strain by the head restraint. Adjust the head restraints as appropriate.
- ☑ Never place objects (e.g. cushions) under or behind the child restraint system.

⚠ **WARNING** Risk of injury or death caused by objects between the seat surface and the child restraint system

Objects between the seat surface and the child restraint system could affect the function of the automatic co-driver airbag shutoff.

- ▶ Do not place any objects between the seat surface and the child restraint system.
- ▶ Always make sure that the child restraint system is installed correctly.

- ▶ Set the co-driver seat as far back as possible and move the seat into the highest position possible.
- ▶ Fully retract the seat cushion length adjustment.
- ▶ Set the seat backrest to the most vertical position possible.
- ▶ Install the child restraint system.
  The entire base of the child restraint system must always rest on the sitting surface of the co-driver seat.
- ▶ Always make sure that the shoulder belt strap is correctly routed from the seat belt outlet of the vehicle to the shoulder belt guide on the child restraint system.
  The shoulder belt strap must be routed forwards and downwards from the seat belt outlet.
- ▶ If necessary, adjust the seat belt outlet and the co-driver seat as appropriate.

Child safety locks

Activating or deactivating child safety locks for the sliding doors

⚠ **WARNING** Accident- and risk of injury with unsupervised children in the vehicle

If you leave children unattended in the vehicle, they can in particular

- Open doors and thereby endanger other persons or road users.
- get out of the car and are hit by traffic.
- Operate vehicle equipment and become trapped, forexample.

In addition, the children could also set the vehicle in motion, for exampleby:

- releasing the parking brake.
- change the gearbox setting.
- start the vehicle.

- ▶ Never leave children unattended in the vehicle.
- ▶ When leaving the vehicle, always take the SmartKey with you and lock the vehicle.
- ▶ Keep the key out of reach of children.

⚠ **WARNING** Risk of fatal injury due to exposure to extreme heat or cold in the vehicle

If persons, particularly children, are subjected to prolonged exposure to intense heat or cold, there is a risk of severe injury or even death.

- ▶ Never leave persons, particularly children, unattended in the vehicle.

WARNING Risk of accident and injury due to children left unattended in the vehicle

If children are travelling in the vehicle, they could, in particular:

- open doors, thereby endangering other persons or road users
- get out and be struck by oncoming traffic
- operate vehicle equipment and become trapped, for example

▶ Always activate the child safety locks installed if children are travelling in the vehicle.

▶ Never leave children unattended in the vehicle.

▶ When leaving the vehicle, always take the key with you and lock the vehicle.

The following doors have child safety locks:

- Sliding doors
- Hinged windows

The child safety locks on the doors secure each door separately. The doors can no longer be opened from the inside (except the electric sliding door). The door can be opened from the outside when the vehicle is unlocked.

Only the sliding door controls in the rear are deactivated if the electric sliding door is secured. The electric sliding door can be opened anytime using the switch in the centre console.

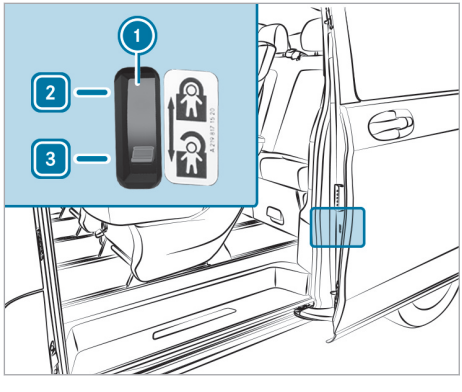

▶ Slide the child safety lock latch (1) into position [2] (secure) or [3] (unlock).

▶ Ensure that the child safety locks are working properly.

Activating or deactivating child safety locks for hinged windows

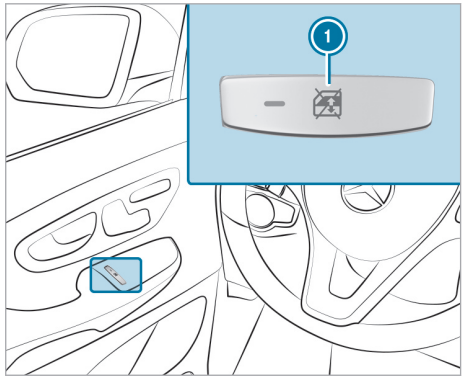

▶ **To activate and deactivate:** press button (1). If the indicator lamp on button (1) is lit, operation of the electrical pop-out windows is disabled. Operation is then only possible using the buttons in the driver's door.

Notes on pets in the vehicle

WARNING Risk of accident and injury due to animals left unsecured or unattended in the vehicle

If you leave animals in the vehicle unattended or unsecured, they could press buttons or switches, for instance.

An animal may:

- activate vehicle equipment and become trapped, for example
- switch systems on or off and endanger other road users

Unsecured animals may be thrown about the vehicle in the event of an accident, or sudden steering and braking manoeuvres, and injure vehicle occupants.

▶ Never leave animals unattended in the vehicle.

▶ Always correctly secure animals while driving, e.g. using a suitable animal carrier.

Key

Overview of key functions

WARNING Accident- and risk of injury with unsupervised children in the vehicle

If you leave children unattended in the vehicle, they can in particular

- Open doors and thereby endanger other persons or road users.
- get out of the car and are hit by traffic.
- Operate vehicle equipment and become trapped, forexample.

In addition, the children could also set the vehicle in motion, for exampleby:

- releasing the parking brake.
- change the gearbox setting.
- start the vehicle.

▶ Never leave children unattended in the vehicle.

▶ When leaving the vehicle, always take the SmartKey with you and lock the vehicle.

▶ Keep the key out of reach of children.

WARNING Risk of accident due to the key inadvertently turning in the ignition lock

If heavy or large objects are attached to the key, the key can inadvertently turn in the ignition lock.

▶ Do not attach large or heavy objects to the key.

▶ Remove the key from a bulky bunch of keys before inserting it into the ignition lock.

NOTE Damage to the key caused by magnetic fields

▶ Keep the key away from strong magnetic fields.

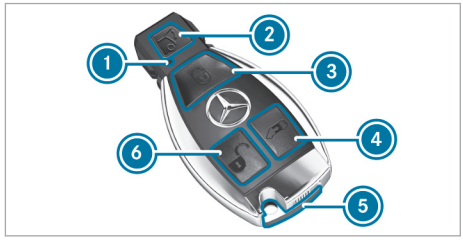

Key (example: vehicles with an EASY-PACK tailgate and/or rear window which can be opened separately)

1. Indicator lamp
2. To open or close the EASY-PACK tailgate, or to unlock the rear window which can be opened separately
3. To lock the vehicle centrally
4. To unlock the EASY-PACK tailgate and sliding doors, or to unlock and open/close the electric sliding door
5. Emergency key
6. To unlock the vehicle centrally or only the driver's door

ⓘ If you do not open the vehicle within approximately 40 seconds of unlocking, the vehicle will lock again and anti-theft protection will be primed again.

Do not keep the key together with electronic devices or metallic objects. This can affect the key's functionality.

ⓘ If the indicator lamp does not light up when you press the [🔓] or [🔒] button, the battery is discharged.

Replace the key battery (→ page 51).

Activating/deactivating the acoustic locking verification signal

Multimedia system:

→ [⌂] ▸▸ Settings ▸▸ Vehicle

▶ Activate or deactivate Acoustic lock.

ⓘ **Please note:** The selected setting of the audible closing feedback must comply with the relevant national road traffic regulations. In some countries, including Germany, using the acoustic locking verification signal is forbidden by traffic laws (in accordance with §16 Para. 1 and §30 Para. 1 of the German national road traffic regulations). The driver of the vehicle must ensure compliance with these regulations. In countries where the use of this function is not permitted, this function is not activated in the vehicle and must not be activated.

Changing the unlocking settings

The key has the following adjustable unlocking functions:

- unlock the vehicle centrally
- unlock the driver's door

▶ **To switch between settings:** press and hold the [🔓] and [🔒] buttons at the same time for approximately six seconds until the indicator lamp flashes twice.

▶ **To unlock the vehicle centrally when the unlocking function is selected for the driver's door:** press the [🔓] button a second time.

Removing and inserting the emergency key

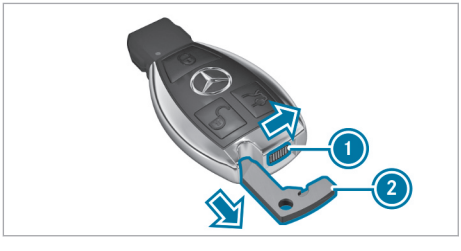

ⓘ The anti-theft alarm system (ATA) is triggered when you unlock and open the vehicle using the emergency key (→ page 66).

▶ **To remove:** push release catch ① in the direction of the arrow and simultaneously pull emergency key ② completely out of the key.

▶ **To insert:** push emergency key ② completely into the key until it engages and release catch ① is back in its initial position.

Replacing the key battery

⚠ **DANGER** Risk of fatal injury due to swallowing batteries

Batteries contain toxic and corrosive substances. If batteries are swallowed or otherwise enter the body, severe internal burns can occur within two hours.

There is a risk of fatal injury!

▶ Keep the batteries out of the reach of children.

▶ If the battery cover does not close securely, stop using the key and keep it away from children.

▶ If batteries are swallowed or otherwise enter the body, seek immediate medical attention.

ENVIRONMENTAL NOTE Environmental damage due to improper disposal of batteries

Batteries contain pollutants. It is illegal to dispose of them with the household rubbish.

▶ Dispose of batteries in an environmentally responsible manner. Take discharged batteries to a qualified specialist workshop or to a collection point for used batteries.

Requirements:

- You need one CR 2025 3 V cell battery

Replacing the battery

Mercedes-Benz recommends that you have the battery changed at a qualified specialist workshop.

▶ Remove the emergency key (→ page 51).

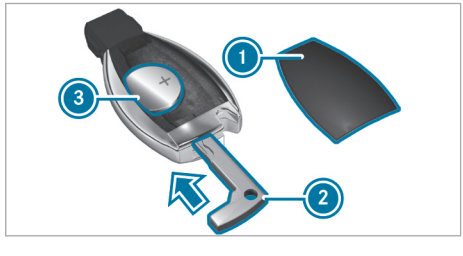

- Press emergency key ② into the opening in the key in the direction of the arrow until battery compartment cover ① opens. When doing so, do not hold battery compartment cover ① shut.
- Tap the key against the palm of your hand so that battery ③ falls out of the battery compartment.
- Insert the new battery into the battery tray with the positive pole facing upwards. Use a lint-free cloth to do so.
- Fit battery compartment cover ① to the key casing with the front lugs first and push it closed.
- Slide emergency key ② back into the key (→ page 51).

Problems with the key, troubleshooting

It is no longer possible to lock the vehicle using the key.

Possible causes:

- The doors are not closed properly.
- The central locking system has malfunctioned.

- Close the doors properly and lock the vehicle again.
- Lock the vehicle using the emergency key (→ page 51) or press down the locking pins and then close the doors.
- Have the central locking system checked as soon as possible at a qualified specialist workshop.

You can no longer lock or unlock the vehicle

Possible causes:

- The key battery is weak or discharged.
- The key is faulty.

- Check the battery using the indicator lamp and replace the battery, if necessary (→ page 50).
- Use the emergency key element to lock and unlock the vehicle (→ page 51).
- Have key checked at a qualified specialist workshop.

The vehicle will not start with the key.

Possible causes:

- The on-board electrical system voltage is too low.

- Switch off all non-essential consumers, suchas interior lighting, and try to start the vehicle again.

If this does not work:

- Consult a qualified specialist workshop.

You have lost a key

- Have the key deactivated at a qualified specialist workshop.
- Report the loss immediately to the vehicle insurers.
- If necessary, have the mechanical lock replaced as well.

Doors

Unlocking and opening the door from inside

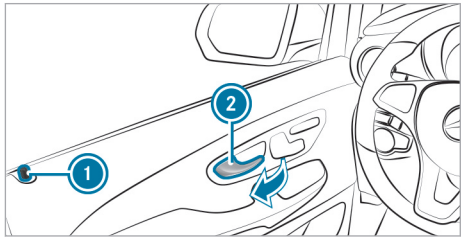

Door handle (example: driver's door)

- Pull door handle ②.
  Safety pin ① pops up when the door is unlocked.

Centrally locking and unlocking the door from the inside

WARNING Accident- and risk of injury with unsupervised children in the vehicle

If you leave children unattended in the vehicle, they can in particular

- Open doors and thereby endanger other persons or road users.
- get out of the car and are hit by traffic.
- Operate vehicle equipment and become trapped, forexample.

In addition, the children could also set the vehicle in motion, for exampleby:

- releasing the parking brake.
- change the gearbox setting.
- start the vehicle.

▶ Never leave children unattended in the vehicle.

▶ When leaving the vehicle, always take the SmartKey with you and lock the vehicle.

▶ Keep the key out of reach of children.

WARNING Risk of fatal injury due to exposure to extreme heat or cold in the vehicle

If persons, particularly children, are subjected to prolonged exposure to intense heat or cold, there is a risk of severe injury or even death.

▶ Never leave persons, particularly children, unattended in the vehicle.

You can use the central locking buttons to centrally lock and unlock the entire vehicle from the inside.

The central locking buttons are located in the driver's door.

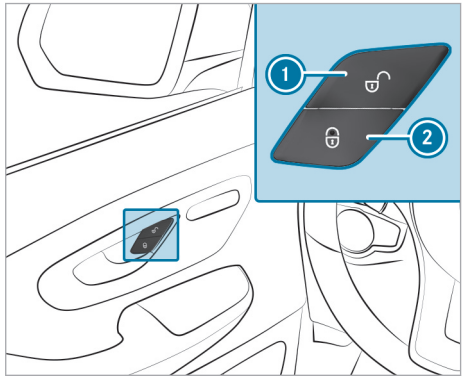

Central locking buttons (vehicles with manually adjustable front seats)

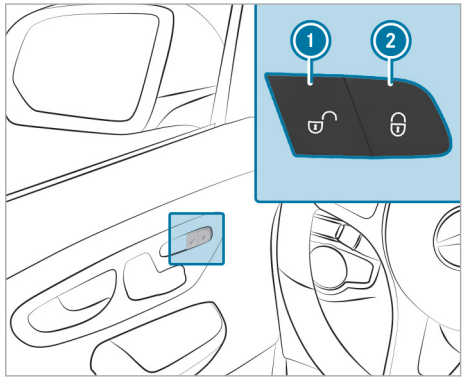

Central locking buttons (vehicles with electrically adjustable front seats)

▶ **To lock or unlock the entire vehicle:** press button 1 (unlock) or 2 (lock) when the doors are closed.

Observe the following settings when locking and unlocking from inside:

- If the driver's or co-driver's door is open, the open door is not locked.

  All other doors and the tailgate are locked.
- If a sliding door or the tailgate is open, only the driver's and co-driver's doors are locked.
- You cannot unlock the vehicle centrally from the inside if the vehicle has been locked with the key.
- If the vehicle has been locked using the central locking button and a door is opened from the

inside, only the door that has been opened is unlocked.

- If the vehicle has previously been locked with the key, opening a door from the inside will trigger the anti-theft alarm system. Switch off the alarm (→ page 66).

Activating/deactivating the automatic locking mechanism

Requirements:

- The power supply or the vehicle has been switched on.
- The doors are closed.

When the automatic locking mechanism is activated and the vehicle is travelling at a speed above 15 km/h, the vehicle is locked automatically.

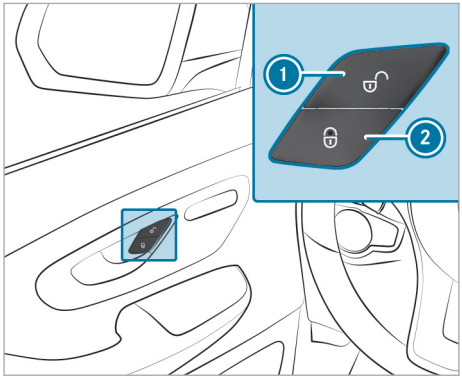

Central locking buttons (vehicles with manually adjustable front seats)

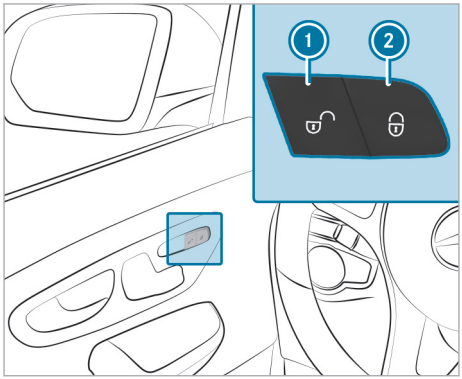

Central locking buttons (vehicles with electrically adjustable front seats)

If the vehicle is being tested on a roller dynamometer, there is a risk of being locked out when the function is activated.

▶ **To activate:** press and hold button ② until you hear a tone.

▶ **To deactivate:** press and hold button ① until you hear a tone.

Unlocking and locking the driver's door with the emergency key

ⓘ To lock the vehicle fully with the emergency key, press down the locking pins of the doors. Then lock the driver's door with the emergency key.

▶ **To unlock:** insert the emergency key fully into the driver's door lock and turn it anti-clockwise.

▶ **To lock:** insert the emergency key fully into the driver's door lock and turn it clockwise.

ⓘ **Right-hand drive vehicles:** turn the emergency key in the opposite direction for each case.

Sliding door

Opening/closing the sliding door from outside

⚠ **WARNING** Risk of becoming trapped due to an open sliding door which is not engaged in place

On an incline, the sliding door can move by itself.

This can cause you or other people to become trapped.

▶ Always make sure that the open sliding door is engaged. To do so, open the sliding door to the stop.

! **NOTE** Damage to the sliding door due to incorrect use

Using the lower guide of the sliding door (carriage) as a step can result in damage to the trim and/or mechanical components of the sliding door.

▶ Do not use the lower guide of the sliding door (carriage) as a step.

Opening

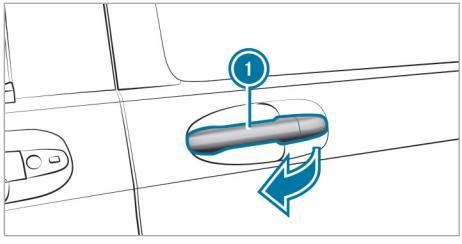

The sliding door is equipped with an active retainer, which engages when the door is opened as far as it will go.

- Pull door handle (1) in the direction of the arrow.
  The sliding door opens.
- Push back the sliding door using door handle (1) until it engages.
- Check the sliding door catch.

Closing

- Pull the sliding door by door handle (1).
  The sliding door is released from its catch.
- Push the sliding door firmly forwards using door handle (1) and close it.

Opening/closing the sliding door from inside

WARNING Risk of becoming trapped due to sliding door opening towards the rear

When you open the sliding door, the sliding door could hit other people as it moves towards the rear of the vehicle.

- Only open the sliding door when traffic conditions permit.

Requirements:
- The child safety lock is deactivated.

Opening

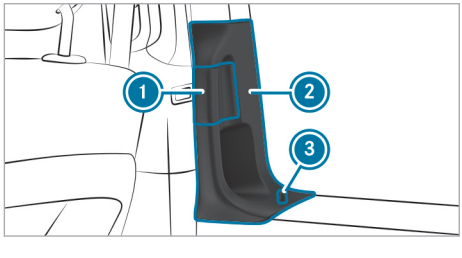

- Pull back rocker switch (1).
  If the door is locked, locking pin (3) pops up.
  The sliding door unlocks and opens.
- Push back the sliding door using door handle (2) until it engages.
- Check the sliding door catch.

Closing

- Push rocker switch (1) forwards.
  The sliding door is released from its catch.
- Push the sliding door forwards using door handle (2) and close it.

Electric sliding door

Function of the electric sliding door

WARNING Risk of becoming trapped due to sliding door opening towards the rear

When you open the sliding door, the sliding door could hit other people as it moves towards the rear of the vehicle.

- Only open the sliding door when traffic conditions permit.

NOTE Damage to the sliding door due to incorrect use

Using the lower guide of the sliding door (carriage) as a step can result in damage to the trim and/or mechanical components of the sliding door.

- Do not use the lower guide of the sliding door (carriage) as a step.

You must reset the electric sliding door if there has been a malfunction or a drop in voltage (→ page 58).

Your vehicle can be equipped with an electric sliding door on the left and/or right-hand side.

You can open and close the sliding door with these controls:

- Sliding door buttons on the centre console
- Sliding door button on the door sill (B-pillar)
- Door handle (inside or outside)
- Key

Automatic blockage detection with sliding door reversing function
If a solid object blocks or restricts the sliding door during the automatic closing process, the sliding

door opens again automatically. If the sliding door is obstructed during the opening procedure, it moves back a few centimetres in the opposite direction and stops.

The automatic blockage detection with reversing function is only an aid. It is not a substitute for your attentiveness when closing the electrical sliding door.

If an obstacle is detected, the display shows a message, forexample Left-hand electric sliding door Obstruction detected, and five warning tones sound.

ⓘ In unfavourable operating conditions, e.g. frost, ice or heavy soiling, press and hold the appropriate sliding door button. The electric sliding door moves with increased force. Observe that in such circumstances, the blockage detection is less sensitive. To stop the movement, release the sliding door button.

⚠ **WARNING** Risk of becoming trapped despite reversing function

The reversing feature does not react:

- to soft, light and thin objects, e.g. fingers
- over the last 8 mm of the closing movement

The reversing feature therefore cannot prevent someone being trapped in these situations.

▶ Make sure that no body parts are in the closing area.

If someone becomes trapped, take the following actions:

- press the button on the key or
- pull the exterior door handle or
- press the appropriate sliding door button in the centre console or
- press the button on the door sill or
- pull the rocker switch on the door handle

Opening and closing the electrical sliding door from the inside

⚠ **WARNING** Risk of becoming trapped due to sliding door opening towards the rear

When you open the sliding door, the sliding door could hit other people as it moves towards the rear of the vehicle.

▶ Only open the sliding door when traffic conditions permit.

Opening

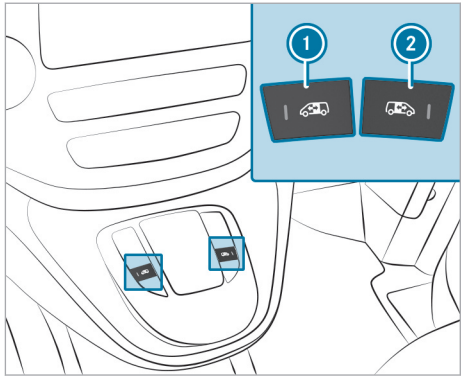

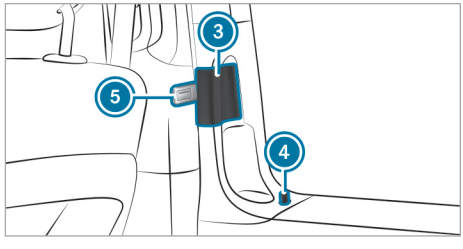

1. Sliding door button for the sliding door on the left-hand side
2. Sliding door button for the sliding door on the right-hand side
3. Rocker switch
4. Safety pin
5. Sliding door button in the door sill

You can only open a sliding door with the sliding door button 5 in the door sill or with the rocker switch 3 on the door handle if the child-proof lock has not been activated.

The sliding door is equipped with an active retainer, which engages the door at the end stop when opened.

▶ Briefly press the appropriate sliding door button 1 or 2 in the centre console.

or

▶ Press sliding door button 5 in the door sill.

or

- Briefly pull back rocker switch ③.
  If the door is locked, locking pin ④ pops up.
  The sliding door unlocks, automatic operation is started and the sliding door opens.

  If you use sliding door button ① or ② in the centre console you will hear two warning signals during the opening procedure.

  The indicator lamp in the corresponding sliding door button ① or ② in the centre console flashes for the duration of automatic operation.

  The indicator lamp in the corresponding sliding door button ① or ② in the centre console is lit whenever the sliding door is open. Depending on the vehicle equipment, the display can also show the Sliding door open message.

Closing

- Briefly press appropriate sliding door button ① or ② in the centre console.

or

- Press sliding door button ⑤ in the door sill.

or

- Briefly push rocker switch ③ forwards.
  The sliding door is released from its lock and automatic operation is started. The sliding door closes.

  If you use sliding door button ① or ② in the centre console you will hear two warning signals during the closing procedure.

  The indicator lamp in the corresponding sliding door button ① or ② in the centre console goes out whenever the sliding door is closed.

Interrupting automatic operation

- Press corresponding sliding door button ① or ② in the centre console again.

or

- Press sliding door button ⑤ in the door sill again.

or

- Briefly pull back rocker switch ③.

Opening/closing the electric sliding door with the key

ⓘ If your vehicle is fitted with two sliding doors, the button on the key can only be used to open or close only one of the two sliding doors(→ page 57).

- **To unlock:** briefly press the button on the key.
- **To open:** press and hold the button on the key for longer than 0.5 seconds.
  You will hear two acoustic signals and the sliding door will open automatically.
- **To close:** press and hold the button on the key for longer than 0.5 seconds.
  You will hear two acoustic signals and the sliding door will close automatically.
- **To interrupt automatic operation:** briefly press the button on the key.
  The sliding door stops moving.

Opening/closing the electrical sliding door from the outside

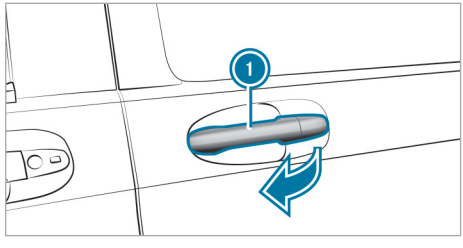

- **To open:** pull door handle ①.
  The sliding door opens. In addition, you will hear two warning signals.
- **To close:** pull door handle ①.
  The sliding door closes.
- **To interrupt automatic operation:** pull door handle ① again.

Programming the key button for the sliding door

Requirements

- The vehicle is equipped with two electric sliding doors.
- The sliding door to be programmed is open.
- The vehicle is switched on.

The button on the key can be programmed. Program the button to open the right or left sliding door.

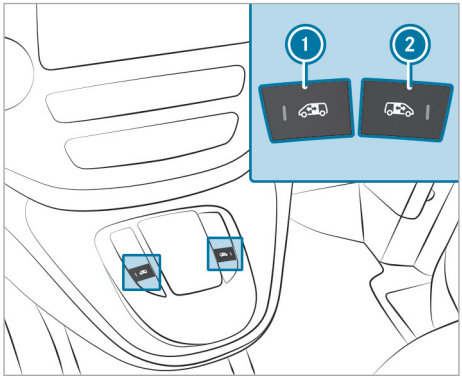

1 Sliding door button for the sliding door on the left-hand side
2 Sliding door button for the sliding door on the right-hand side

▶ Press and hold sliding door button 1 or 2 in the centre console for the appropriate sliding door until the sliding door is closed and four tones have sounded.
The Left-hand electric sliding door key programmed/Right-hand electric sliding door key programmed message appears in the display.

Resetting the electric sliding door

You must reset the electric sliding door if there has been a malfunction or a drop in voltage.

▶ If the sliding door is open: close it by hand.

▶ Using the corresponding sliding button or on the centre console, open the sliding door at least 40 cm and then close the sliding door completely.

▶ When the sliding door is closed, open the sliding door fully using the corresponding sliding door button or on the centre console.
The sliding door is reset.

Rectifying problems with the electric sliding door

The electric sliding door is locked in place.
Unfavourable operating conditions, e.g. frost, ice or heavy soiling, may obstruct the function of the sliding door.

▶ Press and hold the sliding door button until the sliding door has opened or closed.
The sliding door moves with increased force. Observe that in such circumstances, the blockage detection is less sensitive. To stop the movement, release the sliding door button.

▶ Remove the cause of the blockage at the earliest opportunity.

Tailgate

Opening and closing the tailgate

! **NOTE** Damage to the tailgate caused by obstacles above the vehicle

The tailgate swings rearwards and upwards when it is opened.

▶ Make sure that there is sufficient space behind and above the tailgate.

ⓘ You will find details of the tailgate opening dimensions under "Technical data" (→ page 251).

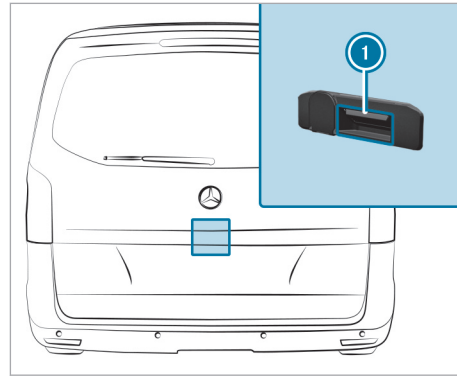

▶ **To open:** push button 1 on the handle and raise the tailgate.

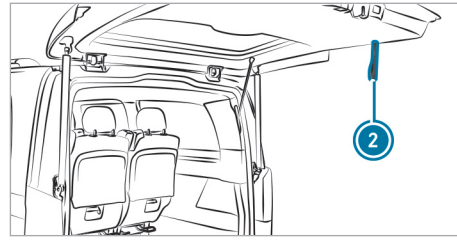

▶ **To close:** pull the tailgate firmly downwards by loop ② and close it from outside.

Opening the tailgate in an emergency
If the battery voltage is low or the voltage supply is interrupted, the tailgate cannot be opened.

In an emergency, you can open the tailgate using the release catch for service purposes.

▶ Prise off the cover on the lower part of the tailgate with a suitable tool, e.g. the screwdriver from the vehicle tool kit.

▶ Insert the screwdriver into the opening and move the release lever until the tailgate unlocks and opens.

▶ Lift the tailgate upwards.

EASY-PACK tailgate

Notes on the EASY-PACK tailgate

! **NOTE** Damage to the tailgate caused by obstacles above the vehicle

The tailgate swings rearwards and upwards when it is opened.

▶ Make sure that there is sufficient space behind and above the tailgate.

ⓘ You will find details of the tailgate opening dimensions under "Technical data" (→ page 251).

Obstruction detection with reversing function
The tailgate is equipped with automatic object detection with reversing function. If a solid object blocks or restricts the tailgate during the automatic closing process, the tailgate opens again automatically. The automatic object detection with reversing function is only an aid. It is not a substitute for your attentiveness when closing the tailgate.

⚠ **WARNING** Risk of becoming trapped despite reversing function

The reversing function does not react:

- to soft, light and thin objects, e.g. fingers.
- over the last 8 mm of the closing path.

In these situations in particular, the reversing function cannot prevent someone being trapped.

▶ Make sure that no body parts are in the closing area.

If someone gets trapped:

- Press the button on the key, or
- Press the closing button on the tailgate, or
- Pull the tailgate handle.

Opening and closing the EASY-PACK tailgate

! **NOTE** Damage to the tailgate caused by obstacles above the vehicle

The tailgate swings rearwards and upwards when it is opened.

▶ Make sure that there is sufficient space behind and above the tailgate.

Requirements:

- The rear window is closed.
- The tailgate is unlocked.
- Nobody is within the range of movement of the tailgate.
- The button on the key is programmed to open and close the tailgate (→ page 61).

Opening

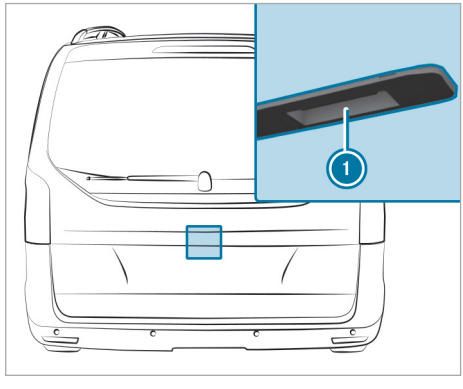

▶ Press button ① on the handle and step out of the range of movement of the tailgate.

or

▶ Press and briefly hold the button on the key.
An automatic operation starts. The tailgate opens and swings upward.

In addition, two acoustic signals sound.

Closing

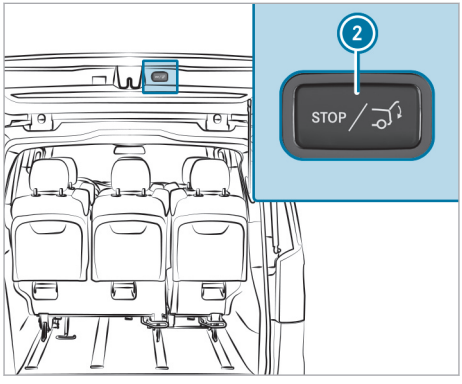

▶ Press button ② on the tailgate and step out of the range of movement of the tailgate.

or

▶ Press and briefly hold the button on the key.
An automatic operation starts and the tailgate closes.

During the closing process, closing button ② flashes and two acoustic signals sound.

Interrupting the automatic operation

▶ Press button ① on the handle again.

or

▶ Press closing button ② on the tailgate again.

or

▶ Press and briefly hold the button on the key again.

Setting the opening angle of the tailgate

Setting the end position

You can set the opening angle of the tailgate by saving the desired position as the end position.

▶ Open the tailgate and stop automatic operation in the desired position.

or

▶ Open the tailgate and manually swing it into the desired position.

▶ Press and hold the closing button on the tailgate until the acoustic signal sounds once. The current position of the tailgate will have been saved as the end position.

Resetting to the maximum opening angle

▶ Open the tailgate.

▶ Press and hold the closing button on the tailgate until the acoustic signal sounds twice. The saved end position will have been deleted and the tailgate will open again to the maximum extent.

Resetting the tailgate

You must reset the tailgate if there has been a malfunction or an interruption in the voltage supply.

▶ If the tailgate is open: close the tailgate by hand.

▶ Briefly press the button in the handle of the tailgate, step out of the swinging range of the tailgate and open the tailgate.

▶ When the tailgate is fully open, press the closing button in the tailgate and step out of the swinging range of the tailgate.
The tailgate closes. When the tailgate is fully closed, it is reset and operational.

ⓘ When the button of the key is programmed for operating the tailgate (→ page 61), you can also use the key to open and close the tailgate.

Opening and closing the rear window

Requirements:

- The vehicle or load compartment is unlocked and the tailgate is closed.
- To open using the key:
  - The vehicle is fitted with an EASY-PACK tailgate and the key button is programmed to open the rear window (→ page 61).

Opening

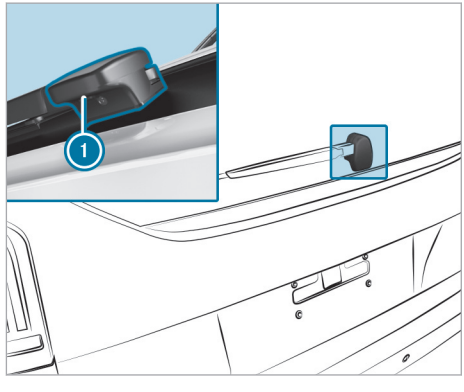

▶ Press the button on the key.

or

▶ Press button ① on the handle on the rear window.

Closing

▶ Swing the rear window down and push it closed.

Programming the key button for the tailgate or rear window

Requirements:
- The tailgate and the rear window are closed.
- The vehicle is switched on.

If your vehicle is fitted with an EASY-PACK tailgate, you can program the button on the key either to open/close the tailgate or to open the rear window.

▶ Press the buttons in the handle of the tailgate and in the handle of the rear window simultaneously for approximately five seconds. After successfully changing the function, the vehicle turn signal lamps flash once.

▶ Check the function of the button on the key.

Side window

Opening and closing the side windows

WARNING Risk of becoming trapped when opening a side window

When you open a side window, parts of the body could be drawn in or become trapped between the side window and window frame.

▶ When opening, make sure that nobody is touching the side window.

▶ If someone is trapped, release the button immediately or pull it in order to close the side window again.

WARNING Risk of becoming trapped when closing a side window

When closing a side window, body parts could be trapped in the closing area in the process.

▶ When closing, make sure that no body parts are in the closing area.

▶ If someone is trapped, release the button immediately or press the button in order to reopen the side window.

WARNING Risk of becoming trapped when children operate the side windows

Children could become trapped if they operate the side windows, particularly when unattended.

▶ Activate the child safety lock for the rear side windows.

▶ When leaving the vehicle, always take the key with you and lock the vehicle.

▶ Never leave children unattended in the vehicle.

WARNING Risk of fatal injury due to exposure to extreme heat or cold in the vehicle

If persons, particularly children, are subjected to prolonged exposure to intense heat or cold, there is a risk of severe injury or even death.

▶ Never leave persons, particularly children, unattended in the vehicle.

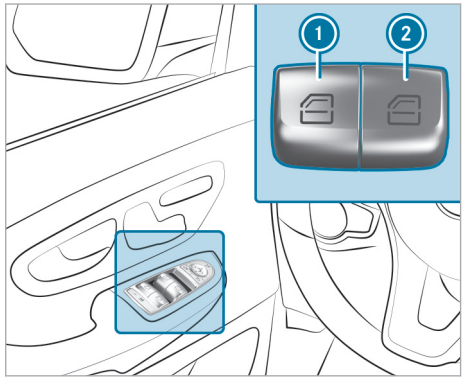

▶ To open manually: press and hold button ① or ②.

▶ To close manually: pull and hold button ① or ②.

The windows in the front doors can also be operated automatically.

▶ To open completely: briefly press button ① or ② beyond the point of resistance. Automatic operation will start.

▶ To close completely: briefly pull button ① or ② beyond the point of resistance. Automatic operation will start.

▶ To interrupt automatic operation: briefly press or pull button ① or ② again.

Automatic reversing function of the side windows
If an object blocks a side window during the closing process, the side window will open again automatically. The automatic reversing function is only an aid and is not a substitute for your attentiveness.

▶ During the closing process, make sure that no body parts are in the closing area.

⚠ **WARNING** Risk of becoming trapped despite there being reversing protection on the side window

The reversing function does not react:

- to soft, light and thin objects, e.g. fingers.
- during resetting.

The reversing function cannot prevent someone from becoming trapped in these situations.

▶ During the closing process, make sure that no body parts are in the closing area.

▶ If someone becomes trapped, press the button to open the side window again.

Opening and closing the hinged window

Requirements:

- The power supply or the vehicle has been switched on.

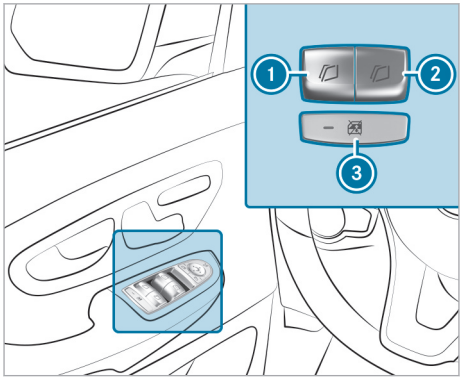

Example: driver's door control panel

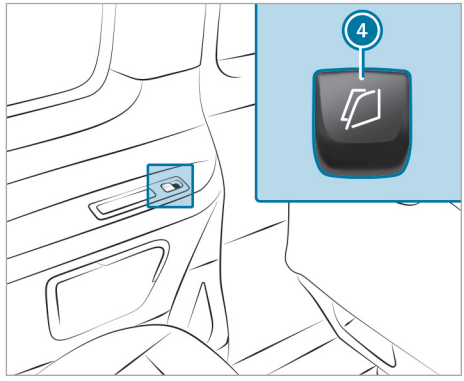

Button in the rear (example: left-hand side of the vehicle)

1. Opens and closes the rear left hinged window
2. Opens and closes the rear right hinged window
3. Child safety lock for electric hinged window (→ page 49)
4. Opens and closes the hinged window

You can operate the hinged window with button 4 only if the child safety lock is not activated.

▶ **To start automatic operation:** press/pull the corresponding button beyond the point of resistance.

▶ **To stop automatic operation:** press/pull the corresponding button beyond the point of resistance again.

Adjusting the side windows

The side windows must be readjusted after a malfunction or a voltage supply interruption.

▶ Switch on the power supply (→ page 129).

▶ Push both buttons on the power window and hold for approximately one second after the side window has closed.

▶ If the side windows remain closed when you release the buttons, they have been reset correctly. If this is not the case, repeat the steps described for the open side windows.

Rectifying problems with the side windows

⚠ **WARNING** Risk of becoming trapped or fatally injured if reversing protection is not activated

If you close a side window again immediately after it has been blocked, the side window will close with increased or maximum force. The reversing function is then not active and body parts may become trapped.

- Make sure that no parts of the body are in the closing area.
- To stop the closing process, release the button or press the button again to reopen the side window.

You cannot open or close a side window all the way.

- Check to see if there are any objects in the window guide.
- Reset the side windows (→ page 62).

Panorama sliding sunroof

Notes on the panorama sliding sunroof

In this section, the term "sliding sunroof" refers to the panorama sliding sunroof.

⚠ **WARNING** Risk of becoming trapped when the sliding sunroof is being opened and closed

Body parts may become trapped in the range of movement.

- During opening and closing, make sure that no body parts are in the range of movement.
- Release the button immediately if somebody becomes trapped.

or

- Briefly press the button in any direction during automatic operation.
  The opening or closing process will be stopped.

⚠ **WARNING** Risk of entrapment if the sliding sunroof is operated by children

Children operating the sliding sunroof could get caught in the moving parts, particularly if unattended.

- Never leave children unattended in the vehicle.
- When leaving the vehicle, always take the key with you and lock the vehicle.

! **NOTE** Malfunction due to snow and ice

Snow and ice may cause the sliding sunroof to malfunction.

- Open the sliding sunroof only if it is free of snow and ice.

! **NOTE** Damage caused by protruding objects

Objects that protrude from the sliding sunroof may damage the seals.

- Do not allow anything to protrude from the sliding sunroof.

! **NOTE** Damage to on-board electronics caused by the ingress of water

Water may enter the vehicle interior when the sliding sunroof is being cleaned.

This may damage the on-board electronics.

- Clean the sliding sunroof only when it is closed.

ⓘ When the sliding sunroof is open, resonance noise may also occur in addition to the usual airflow noises. This is caused by minor pressure fluctuations in the vehicle interior. To prevent or stop these noises, alter the position of the sliding sunroof or open a side window slightly.

Sliding sunroof reversing function

The sliding sunroof is equipped with an automatic reversing function. If a solid object prevents or hinders the closing process, the sliding sunroof will open again automatically. The automatic reversing function is only an aid and is not a substitute for your attentiveness in the process of closing the sliding sunroof.

WARNING Risk of becoming trapped even with the reversing feature active

In particular, the reversing function will not react:

- to soft, light and thin objects, e.g. fingers
- over the last 4 mm of the closing path
- during resetting
- when you close the sliding sunroof again manually immediately after automatic reversing

▶ During the closing process, make sure that no body parts are in the closing area.
▶ Release the button immediately if somebody becomes trapped.

or

▶ Press the button in any direction during the automatic closing process.
The closing process will be stopped.

Opening and closing the panorama sliding sunroof

Requirements:

- The power supply is switched on.

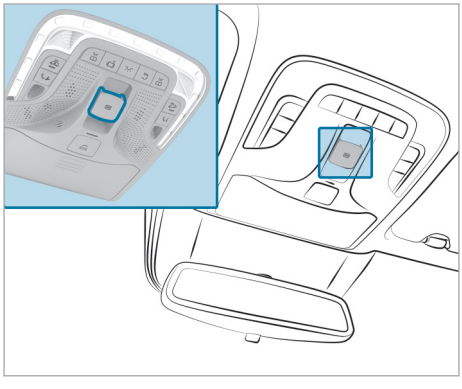

▶ **To raise (vent position):** press the button.
▶ **To open:** pull the button back.
▶ **To close and lower:** pull down the button.
▶ **To start automatic operation:** push or pull the button beyond the point of resistance and release it.
▶ **To stop automatic operation:** push or pull the button beyond the point of resistance and release it.

You will still be able to operate the sliding sunroof if you switch off the vehicle or remove the key. This function will remain available for 30 seconds or until you open a front door.

When the power supply is switched off, the sliding sunroof will close automatically in the following situations:

- If it starts to rain
- In the event of extreme outside temperatures
- After six hours
- If there is a malfunction in the power supply

The sliding sunroof will remain raised at the rear to allow the vehicle interior to continue to be ventilated.

The sliding sunroof will not close in the following situations:

- If the sliding sunroof is raised at the rear.
- If the sliding sunroof is obstructed.
- If it is not raining on the field of the rain sensor on the windscreen because the vehicle is underneath a bridge, for example.

If the sliding sunroof closes via the rain closing function and is obstructed in the process, it will open again slightly. The rain closing function will then be disabled.

Opening and closing the roller sunblinds of the sliding sunroof

WARNING Risk of becoming trapped when the roller sunblind is being opened and closed

Body parts may become trapped between the roller sunblind and frame or sliding roof.

▶ When opening or closing, make sure that no body parts are in the roller sunblind's range of movement.
▶ Release the button immediately if somebody becomes trapped.

or

▶ Briefly press the button in any direction during automatic operation.
The opening or closing process will be stopped.

Requirements:
- The power supply has been switched on.

Reversing function of the roller sunblind
You can open and close the roller sunblind only when the sliding sunroof is closed.

The roller sunblinds are fitted with an automatic reversing function. If a solid object prevents or hinders the closing process, the roller sunblind will open again automatically. The automatic reversing function is only an aid and is not a substitute for your attentiveness in the process of closing the roller sunblinds.

▶ When closing the roller sunblind, make sure that no body parts are in the range of movement.

⚠ **WARNING** Risk of becoming trapped despite reversing function

In particular, the reversing function will not react:
- to soft, light and thin objects, e.g. fingers
- when you close the roller sunblind again manually immediately after automatic reversing

▶ When closing the roller sunblind, make sure that no body parts are in the range of movement.
▶ Release the button immediately if somebody becomes trapped.

or

▶ Press the button in any direction during the automatic closing process.
The closing process will be stopped.

Opening and closing roller sunblinds

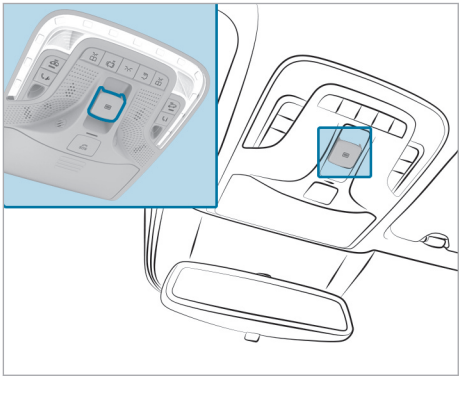

You can close the roller sunblinds only when the sliding sunroof is closed.

▶ **To open:** press the button.
The roller sunblinds will open, and the sliding sunroof will then be raised into the vent position.

or

▶ Pull back the button.
The roller sunblinds will open.
▶ **To close:** pull down the button.
When the sliding sunroof is closed, the roller sunblinds will close.

If you push or pull the button beyond the point of resistance and release it, you will start automatic operation in the direction in question. You can stop automatic operation by pushing or pulling the button again.

Opening and closing roller sunblinds from the rear

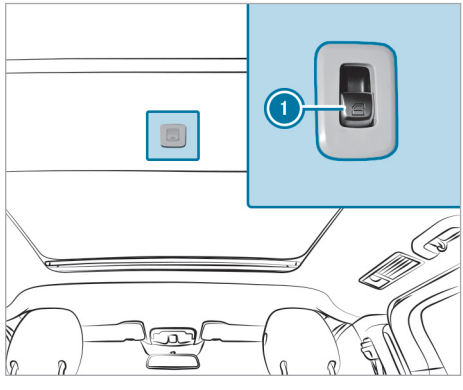

▶ Push or pull button 1 to the point of resistance and hold it until the roller sunblind or the sliding sunroof has reached the desired position.
▶ **Automatic operation:** push or pull button 1 beyond the point of resistance and release it.

With the sliding sunroof, a complete opening or closing process will always pass through "vent position", a fixed intermediate position. You will need to operate button 1 twice to execute a complete opening or closing process.

Rectifying problems with the sliding sunroof

⚠ **WARNING** Risk of becoming trapped or fatal injuries when the sliding sunroof is closed again

If you close the sliding sunroof again immediately after it has been blocked or reset, the sliding sunroof will close with increased or maximum force.

There is a risk of becoming trapped or even of fatal injuries!

- ▶ Make sure that no parts of the body are in the closing area.
- ▶ Release the button immediately if somebody becomes trapped.

or

- ▶ Briefly press the button in any direction during the automatic closing process. The closing process will be stopped.

The sliding sunroof cannot be closed and you cannot detect the cause.

If the sliding sunroof is obstructed during closing and opens again slightly:

- ▶ Immediately after the sliding sunroof has been obstructed, pull the button down again to the point of resistance until the sliding sunroof is closed.
  The sliding sunroof will be closed with increased force.

If the sliding sunroof is obstructed again and opens again slightly:

- ▶ Immediately after the sliding sunroof has been obstructed, pull the button down again to the point of resistance until the sliding sunroof is closed.
  The sliding sunroof will be closed without the automatic reversing function.

Anti-theft prevention

Function of immobiliser

The immobiliser prevents your vehicle from being started without the correct key.

The immobiliser is automatically activated when the vehicle is switched off, and deactivated when the vehicle is switched on.

ATA (Anti-Theft Alarm system)

Function of ATA (Anti-theft Alarm system)

When the ATA is switched on, a visual and acoustic alarm is triggered when opening:

- a door
- the vehicle with the emergency key
- the bonnet
- the tailgate

After locking the vehicle with the key, the ATA system is automatically primed.

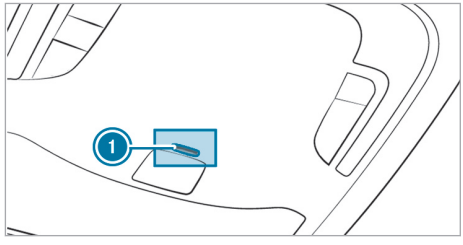

When the ATA system is primed, indicator lamp 1 flashes in the overhead control panel.

ATA is automatically deactivated in the following situations:

- after unlocking the vehicle with the key
- when the key is inserted into the ignition lock

ⓘ The alarm will not be deactivated, even if you immediately close the open door that has triggered it, forexample.

Priming/deactivating ATA (Anti-theft Alarm system)

Switching on

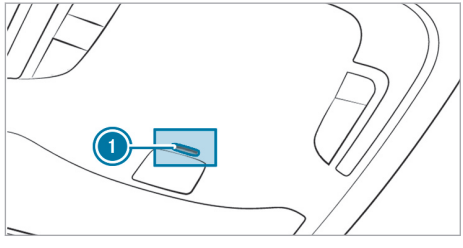

- ▶ Close all doors.
- ▶ Lock the vehicle with the key.
  Indicator lamp 1 in the overhead control panel flashes.

Switching off

▶ Unlock the vehicle with the key.

or

▶ Insert the key into the ignition lock.
Indicator lamp ① in the overhead control panel goes out.

Stopping the alarm

▶ Press the [🔓] or [🔒] button on the key.

or

▶ Insert the key into the ignition lock.
The alarm stops.

Function of tow-away protection

A visual and audible alarm is triggered if the inclination of the vehicle changes, e.g. when lifted on one side, and tow-away protection is primed.

Priming/deactivating tow-away protection

Requirements:

- The doors are closed.
- The tailgate is closed.

Activating

▶ Lock the vehicle with the key.
Tow-away protection is automatically primed after about 50 seconds.

Deactivating

▶ Open the vehicle with the key.

or

▶ Insert the key into the ignition lock.
Tow-away protection is deactivated.

Deactivating

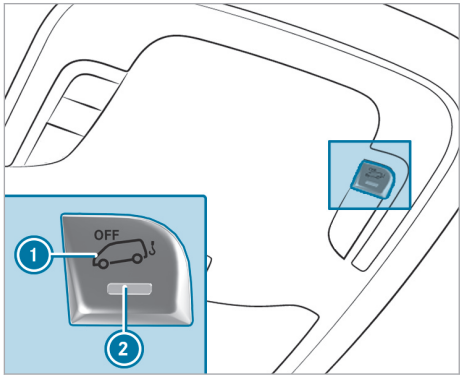

▶ Remove the key from the ignition lock.

▶ Press the ① button.
When the button is released, the indicator lamp ② in the button lights up for approximately three seconds.

▶ Lock the vehicle with the key.
Tow-away protection is deactivated.

Tow-away protection remains deactivated until you lock the vehicle again.

The following situations can lead to a false alarm:

- when loading and/or transporting the vehicle on a ferry or car transporter, for example
- when parking the vehicle on a movable surface, such as a split-level garage

Deactivate tow-away protection in these situations.

Function of interior protection

If the primed interior motion sensor detects motion in the vehicle interior, a visual and acoustic alarm is triggered. This can happen if someone reaches into the vehicle interior, forexample.

Priming and deactivating the interior motion sensor

Requirements:

- The side windows are closed.
- The doors are closed.
- The tailgate is closed.

Activating

▶ Make sure that nothing (such as mascots or coat hangers) is hanging on the rear-view mirror or on the grab handles. This will prevent false alarms.

▶ Lock the vehicle with the key.
The interior motion sensor is primed after approximately 20 seconds.

Deactivating

▶ Unlock the vehicle with the key.

or

▶ Insert the key into the ignition lock.
The interior motion sensor automatically switches off.

Deactivating

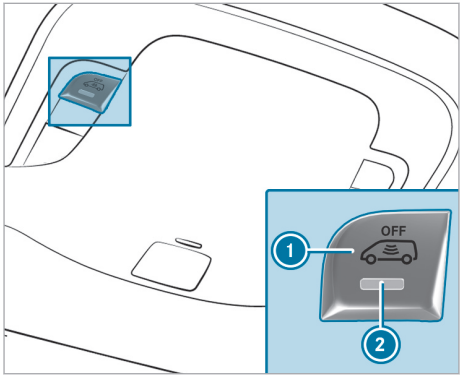

- ▶ Remove the key from the ignition switch.
- ▶ Press the ① button.
  When the button is released, indicator lamp ② in the button lights up for approximately three seconds.
- ▶ Lock the vehicle with the key.
  The interior motion sensor is deactivated.

Interior protection remains deactivated until you lock the vehicle again.

The following situations can lead to a false alarm:

- if there are people or animals remaining inside
- when transporting the vehicle, for example on a ferry or car transporter.

Deactivate the interior motion sensor in these situations.

Notes on the correct driver's seat position

⚠ **WARNING** Risk of accident due to adjusting the vehicle settings while the vehicle is in motion

You could lose control of the vehicle in the following situations in particular:

- if you adjust the driver's seat, the head restraint, the steering wheel or the mirror while the vehicle is in motion
- if you fasten your seat belt while the vehicle is in motion

▶ Before starting the vehicle: in particular, adjust the driver's seat, head restraint, steering wheel and mirror, and fasten your seat belt.

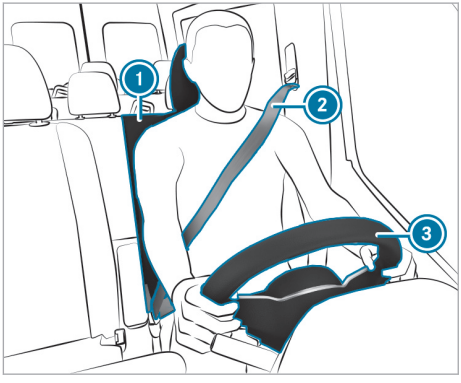

Ensure the following when adjusting steering wheel ③, seat belt ② or driver's seat ①:

- You are sitting as far away from the driver's airbag as possible.
- You are sitting in an upright position.
- Your thighs are gently supported by the seat cushion.
- Your legs are not fully extended and you can reach the pedals easily.
- The back of your head is supported at eye level by the middle part of the head restraint.
- You can hold the steering wheel with your arms slightly bent.
- You can move your legs without any restrictions.
- You can see all of the instrument cluster displays well.
- You have a good overview of the traffic conditions.
- Your seat belt sits snugly against your body and passes across the centre of your shoulder and across your hips in the pelvic area.

Notes on grab handles

⚠ **WARNING** Risk of injury due to excessive load on the grab handles

If you apply your full body weight to the grab handle or pull it abruptly, the grab handle may be damaged or come loose from its anchorage. This may result in injuries.

▶ Use the grab handles only to stabilise the seating position or to assist in getting in and out of the seat.

Seats

Adjusting the front seat manually

⚠ **WARNING** Risk of becoming trapped if the seat is adjusted by children

Children could become trapped if they adjust the seats, particularly if they are unattended.

▶ When leaving the vehicle, always take the key with you and lock the vehicle.

▶ Never leave children unattended in the vehicle.

⚠ **WARNING** Risk of accident due to adjusting the vehicle settings while the vehicle is in motion

You could lose control of the vehicle in the following situations in particular:

- if you adjust the driver's seat, the head restraint, the steering wheel or the mirror while the vehicle is in motion
- if you fasten your seat belt while the vehicle is in motion

▶ Before starting the vehicle: in particular, adjust the driver's seat, head restraint, steering wheel and mirror, and fasten your seat belt.

WARNING Risk of becoming trapped during seat adjustment

When you adjust a seat, you or other vehicle occupants could become trapped, e.g. on the seat guide rail.

- Make sure when adjusting a seat that no one has any body parts in the sweep of the seat.

Observe the safety notes on "Airbags" and "Children in the vehicle".

WARNING Risk of accident due to the driver's seat not being engaged

The driver's seat may move unexpectedly while driving.

This could cause you to lose control of the vehicle.

- Always make sure that the driver's seat is engaged before starting the vehicle.

WARNING Risk of injury or death due to the front seat being positioned too close to the cockpit

The front airbags can also injure the occupants in the front of the vehicle.

- Always adjust the front seats so they are as far away as possible from the front airbags.
- In addition, observe the notes on correct seat adjustment.

WARNING Risk of injury or death due to incorrect seat position

The seat belt will not offer the intended level of protection if you have not moved the seat backrest to an almost vertical position.

In particular, you may slip under the seatbelt and injure yourself.

- Adjust the seat properly before beginning your journey.
- Always ensure that the seat backrest is in an almost vertical position and that the shoulder section of your seat belt is routed across the centre of your shoulder.

WARNING Risk of injury due to head restraints not being fitted or being adjusted incorrectly

If head restraints have not been installed or have not been adjusted correctly, there is an increased risk of injury in the head and neck area, e.g. in the event of an accident or when braking.

- Always drive with the head restraints fitted.
- Before driving off, make sure for every vehicle occupant that the centre of the head restraint supports the back of the head at about eye level.

Do not interchange the head restraints of the front and rear seats. Otherwise, you will not be able to set the height and inclination of the head restraints to the correct position.

Adjust the head restraint fore-and-aft position so that it is as close as possible to the back of your head.

NOTE Damage to the seats and the seat heating due to fluids, pointed objects or insulating materials

To prevent damage to the seats and the seat heating, observe the following instructions:

- Do not spill any fluids onto the seats. If something does get spilt onto the seats, dry the seats as quickly as possible.
- Do not switch on the seat heating if the seat covers are wet or damp. Do not use the seat heating to dry the seats.
- Clean the seats as recommended; see the "Cleaning and care" section.
- Do not transport heavy loads on the seats. Do not place any sharp objects such as knives, nails or tools on the seats. If possible, use the seats only for people.
- When using the seat heating, do not cover the seats with insulating materials such as blankets, coats, bags, protective covers, child seats or booster seats.

Adjusting the seat fore-and-aft position

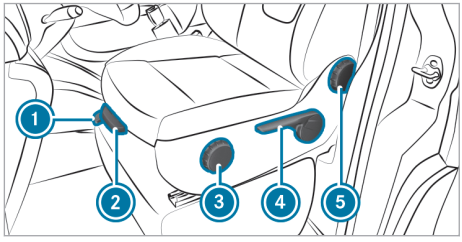

- Pull lever ① upwards and slide the seat forwards or back until the desired position has been reached.
- Release lever ① and push the seat back or forwards until you hear the seat engage.

ⓘ For front swivel seats, the lever in position ① is used to release the swivel seat. The lever to adjust the fore-and-aft position is in the form of a bar in front of the seat (→ page 74).

Adjusting the seat height

- Pull or push lever ④ repeatedly until the desired seat height has been reached.

Adjusting the seat backrest

- Turn handwheel ⑤ forwards.
  The seat backrest will move to a vertical position.
- Turn handwheel ⑤ backwards.
  The seat backrest will tilt back.

Adjusting the seat cushion inclination

- Turn handwheel ③ forwards.
  The front of the seat cushion will tilt down.
- Turn handwheel ③ backwards.
  The front of the seat cushion will tilt up.

Adjusting the seat cushion length

- Pull lever ② upwards and slide the front part of the seat cushion forwards or backwards.

Adjusting the front seat electrically

WARNING Risk of becoming trapped if the seat is adjusted by children

Children could become trapped if they adjust the seats, particularly if they are unattended.

- When leaving the vehicle, always take the key with you and lock the vehicle.
- Never leave children unattended in the vehicle.

The seats can be adjusted when there is no key in the ignition lock and the door is open.

WARNING Risk of accident due to adjusting the vehicle settings while the vehicle is in motion

You could lose control of the vehicle in the following situations in particular:

- if you adjust the driver's seat, the head restraint, the steering wheel or the mirror while the vehicle is in motion
- if you fasten your seat belt while the vehicle is in motion

- Before starting the vehicle: in particular, adjust the driver's seat, head restraint, steering wheel and mirror, and fasten your seat belt.

WARNING Risk of becoming trapped during seat adjustment

When you adjust a seat, you or other vehicle occupants could become trapped, e.g. on the seat guide rail.

- Make sure when adjusting a seat that no one has any body parts in the sweep of the seat.

Observe the safety notes on "Airbags" and "Children in the vehicle".

WARNING Risk of injury or death due to the front seat being positioned too close to the cockpit

The front airbags can also injure the occupants in the front of the vehicle.

- Always adjust the front seats so they are as far away as possible from the front airbags.
- In addition, observe the notes on correct seat adjustment.

WARNING Risk of injury or death due to incorrect seat position

The seat belt will not offer the intended level of protection if you have not moved the seat backrest to an almost vertical position.

In particular, you may slip under the seatbelt and injure yourself.

- Adjust the seat properly before beginning your journey.
- Always ensure that the seat backrest is in an almost vertical position and that the shoulder section of your seat belt is routed across the centre of your shoulder.

WARNING Risk of injury due to head restraints not being fitted or being adjusted incorrectly

If head restraints have not been installed or have not been adjusted correctly, there is an increased risk of injury in the head and neck area, e.g. in the event of an accident or when braking.

- Always drive with the head restraints fitted.
- Before driving off, make sure for every vehicle occupant that the centre of the head restraint supports the back of the head at about eye level.

Do not interchange the head restraints of the front and rear seats. Otherwise, you will not be able to set the height and inclination of the head restraints to the correct position.

Adjust the head restraint fore-and-aft position so that it is as close as possible to the back of your head.

NOTE Damage to the seats and the seat heating due to fluids, pointed objects or insulating materials

To prevent damage to the seats and the seat heating, observe the following instructions:

- Do not spill any fluids onto the seats. If something does get spilt onto the seats, dry the seats as quickly as possible.
- Do not switch on the seat heating if the seat covers are wet or damp. Do not use the seat heating to dry the seats.
- Clean the seats as recommended; see the "Cleaning and care" section.
- Do not transport heavy loads on the seats. Do not place any sharp objects such as knives, nails or tools on the seats. If possible, use the seats only for people.
- When using the seat heating, do not cover the seats with insulating materials such as blankets, coats, bags, protective covers, child seats or booster seats.

Requirements:

- The vehicle is switched on or the door is open.

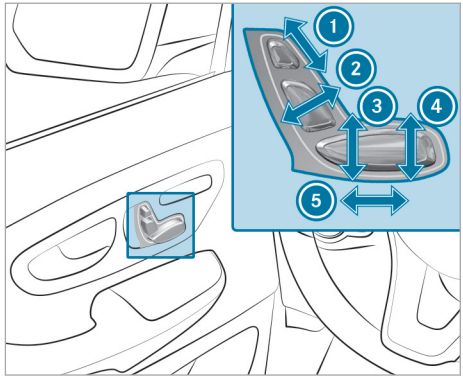

1. Head restraint height adjustment
2. Seat backrest inclination adjustment
3. Seat height adjustment
4. Seat cushion inclination adjustment
5. Seat fore-and-aft position adjustment

- Adjust the seat using buttons 1 to 5 on the door trim.

If you have already switched off the vehicle, you can still adjust the seats for about 30 seconds after unlocking the vehicle, e.g. to allow you to get out easily.

ⓘ **Vehicles with PRE-SAFE®:** if PRE-SAFE® intervenes, the front passenger seat will automatically be adjusted from a less favourable position into one that offers better protection. The front passenger seat can be readjusted only after the hazardous situation is over. Information about the system can be found under "PRE-SAFE® System" (→ page 37).

ⓘ You can save the settings for the seat with the memory function (→ page 73).

Setting 4-way lumbar support

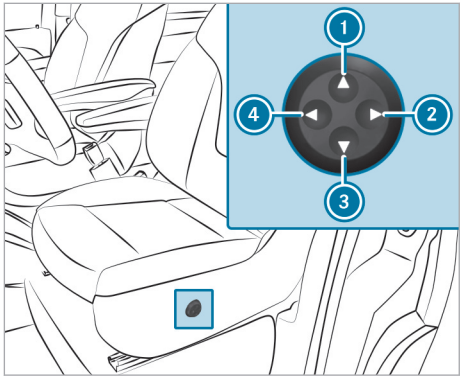

1. Higher
2. Softer
3. Lower
4. Firmer

▶ Use buttons 1 to 4 adjust the backrest contour individually to your spine.

Operating the memory function

⚠ WARNING Risk of an accident if the memory function is used while driving

If you use the memory function on the driver's side while driving, you could lose control of the vehicle as a result of the adjustments being made.

▶ Only use the memory function on the driver's side when the vehicle is stationary.

⚠ WARNING Risk of entrapment when adjusting the seat with the memory function

When the memory function adjusts the seat, you and other vehicle occupants – particularly children – could become trapped.

▶ During the adjustment process of the memory function, make sure that no one has any body parts in the sweep of the seat.

▶ If somebody becomes trapped, immediately release the memory function position button.
The adjustment process is stopped.

⚠ WARNING Danger of entrapment when memory function is activated by children

When children activate the memory function, they can get trapped, especially if they are unsupervised.

▶ Never leave children unattended in the vehicle.

▶ When leaving the vehicle, always take the key with you and lock the vehicle.

The memory function can be used when the vehicle is switched off.

! NOTE Damage to the seat when moving it to a stored position

If the seat is moved from the reclined position to a stored seat position, it may collide with other vehicle parts.

This may damage the seat.

▶ Set the seat backrest upright to a stored position before driving.

Storing seat settings

ⓘ **Vehicles with luxury rear seat:** the memory function is used identically to the front seats. Two memory positions are available.

Seat settings for up to three people can be stored and called up using the memory function.

The following settings are stored as a single memory preset:

- the position of the seat, seat backrest and head restraint
- additionally for the driver's side, the position of both exterior mirrors

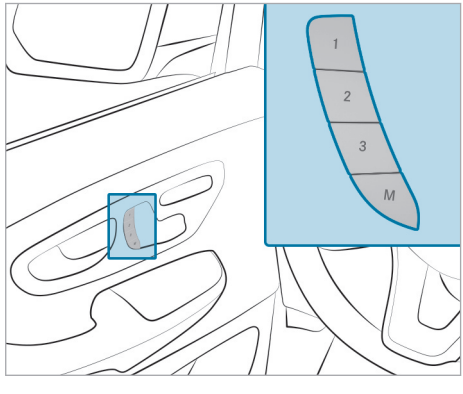

- Adjust the seat as desired.
- Adjust the exterior mirrors as desired.
- Press the M memory button and then press the memory position button 1 , 2 or 3 within three seconds.
  An acoustic signal sounds. The settings are stored.
- **To call up:** press and hold preset position button 1, 2 or 3 until the seat and the exterior mirrors are in the stored position.

Rotating the front seats

WARNING Risk of injury or fatal injuries if the driver's seat and front passenger seat are not engaged

In this situation, the restraint systems cannot perform their intended protective function.

- Engage the driver's seat and front passenger seat in the direction of travel before you start the vehicle.

WARNING Risk of accident due to adjusting the vehicle settings while the vehicle is in motion

You could lose control of the vehicle in the following situations in particular:

- if you adjust the driver's seat, the head restraint, the steering wheel or the mirror while the vehicle is in motion
- if you fasten your seat belt while the vehicle is in motion

- Before starting the vehicle: in particular, adjust the driver's seat, head restraint, steering wheel and mirror, and fasten your seat belt.

NOTE Damage to the seats due to colliding with adjacent car parts

When you rotate the seats, they may collide with adjacent car parts.

This can damage the seats.

- When you rotate the seats, make sure there is sufficient clearance.

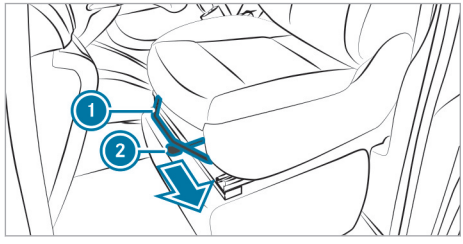

You can rotate the driver's and front passenger seats by 50° and 180°. The seats engage both in and opposite to the direction of travel as well as at 50° towards the exit.

- When you rotate the seat, open the respective front door to avoid a collision with the door trim.
- Adjust the steering wheel in such a way that there is sufficient clearance to rotate and adjust the driver's seat (→ page 92).
- Push lever ② in the direction of the arrow.
  The turning device will be unlocked.
- Rotate the seat in the desired direction.
- If there is a risk of collision with the centre console or the B-pillar, pull lever ① upwards and move the front seat forwards or backwards into the desired position. Then release lever ①.
- In the desired position, make sure that the seat has engaged in the direction of rotation and the longitudinal direction.

Adjusting armrests

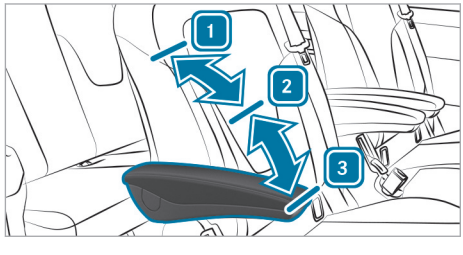

- Fold the armrest upwards more than 45° in position 2.
  The armrest will be unlocked.
- Fold the armrest forwards 3 as far as it will go.
- Slowly fold the armrest upwards into the required position.

▶ **To fold the armrest upwards:** if necessary, fold the armrest upwards more than 90° in position 1.

Rear seats and rear bench seat

Notes on the rear seats

Your vehicle may be equipped with the following seats and bench seats in the rear compartment:

- Standard rear seat
- Luxury rear seat
- Comfort rear bench seat

Bench seat anchorage

⚠ **WARNING** Risk of accident- and injury if the seat is not engaged

If a seat is not engaged, it may be thrown about while the vehicle is moving.

▶ Always make sure that all seats are engaged as described.

⚠ **WARNING** Risk of accident and injury as a result of rear bench seat not being engaged

If the rear bench seat is not engaged, it may be flung around during travel.

▶ Always make sure that the rear bench seat is engaged as described.

Keep the seat anchorages in the vehicle floor free of dirt and objects at all times to ensure that the seat engages securely.

If the indicator tab of the seat anchorages is not retracted into the seat leg, the seat is not correctly engaged. Engage the seat again.

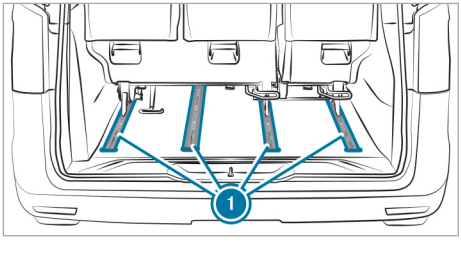

Example: seat rail system with quick-locking mechanism

Guide rails 1 of the seat rail system can be used for the following purposes:

- For mounting up to two rear seat rows
- For mounting both rear seat rows facing one another
- For mounting rear seats and rear bench seats
- For moving rear seats and rear bench seats

ⓘ When you remove a rear bench seat or a seat, the seat slider may slide into a guide rail. The seat sliders will then no longer be parallel in the guide rails. In this case, you will no longer be able to fit the respective seating. The seat sliders must be moved only using a special tool or at a qualified specialist workshop in order to prevent the risk of damage. The tool is available as a Mercedes-Benz accessory.

Seating variants

⚠ **WARNING** Risk of injury due to incorrect installation of the rear bench seats

Incorrect installation of the rear bench seats means that the integrated safety precautions in the rear bench seats cannot protect as they are designed to do.

▶ Install the rear bench seats only as described.

▶ Use only rear bench seats approved for your vehicle.

Depending on the type of seat anchorage in the vehicle floor, you can install the following seating variants:

- Rear bench seats with two or three seats
- Single rear seats

Depending on the vehicle equipment, you can fit the rear bench seats and the rear seats on the first and/or second rear seat row.

The seating variants shown are permitted only if the conditions specified below for safe rear seating are met. Other seating variants are not permitted and may endanger the occupants.

When only the individual seats are used, the rear seats can be installed facing in the direction of travel in all combinations and configurations.

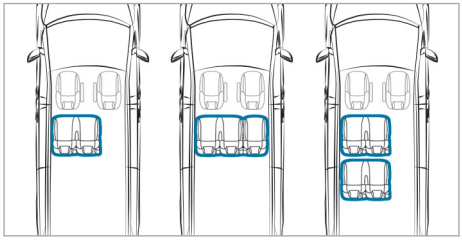

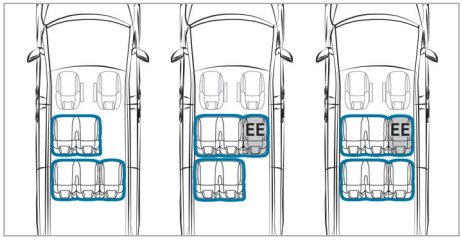

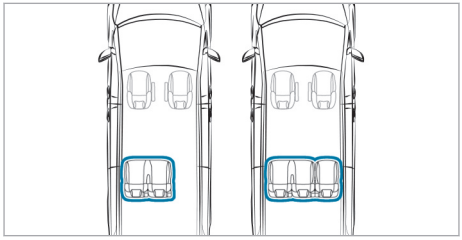

Seating variants facing in the direction of travel

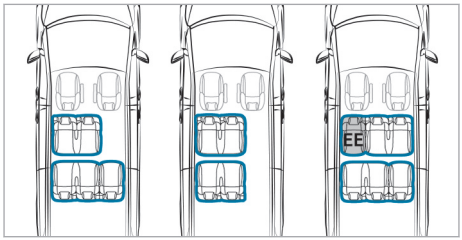

Seating variants for the rear bench seats in the face-to-face position

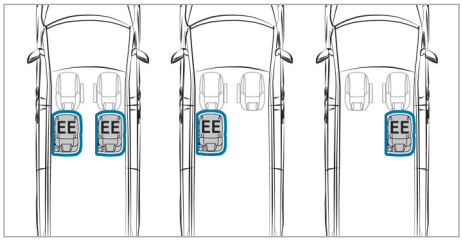

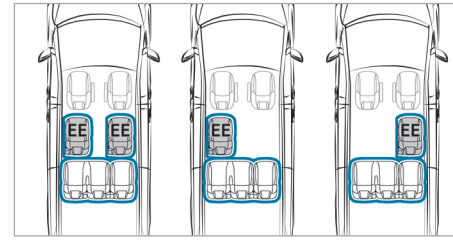

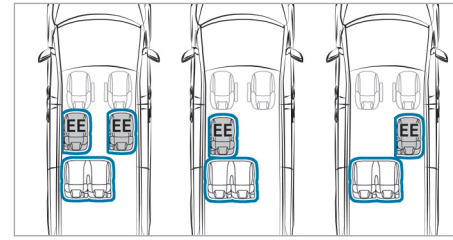

Seating variants for the rear seats and rear bench seats facing in the direction of travel

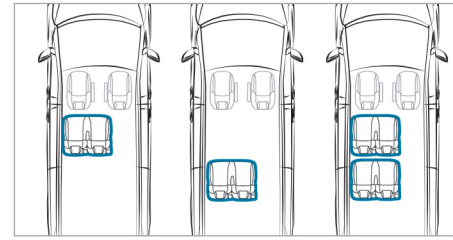

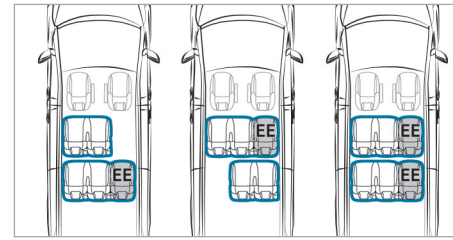

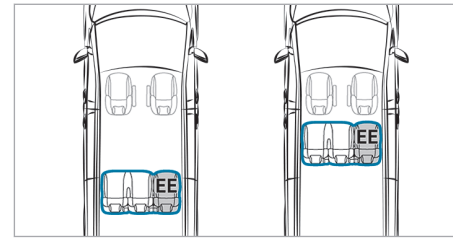

Seating variants for the rear bench seats facing in the direction of travel

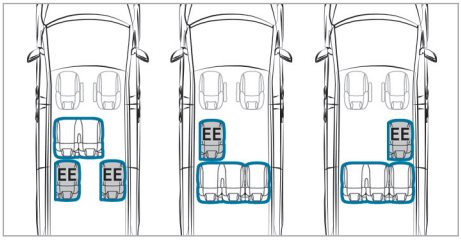

Seating variants for the rear seats and rear bench seats facing in the direction of travel, part 1

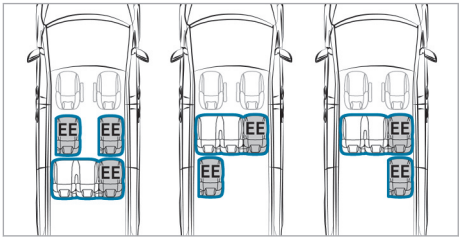

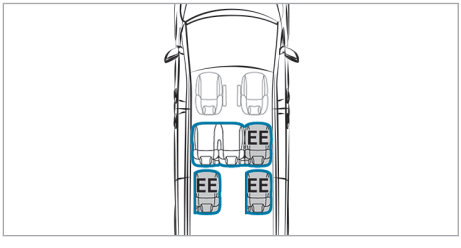

Seating variants for the rear seats and rear bench seats facing in the direction of travel, part 2

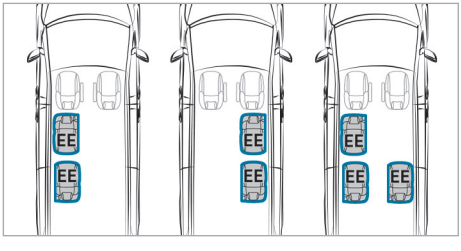

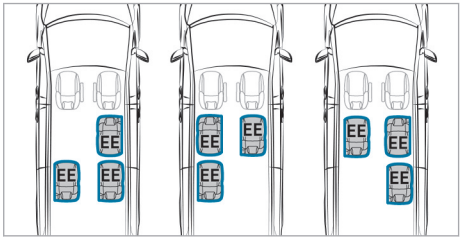

Seating variants in the face-to-face position, part 1

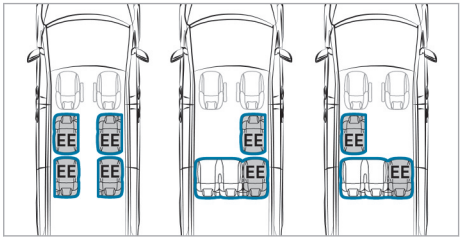

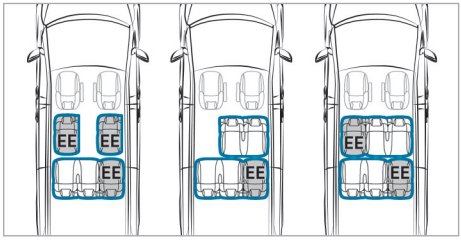

Seating variants in the face-to-face position, part 2

EE Easy entry and exit feature – EASY-ENTRY

If a rear seat bench or a rear seat is marked with EE in the illustrations, a rear seat bench or a rear seat must be fitted with the EASY-ENTRY easy entry and exit feature in the position indicated.

If a rear bench seat is not marked, a rear bench seat can be fitted with or without the EASY-ENTRY feature in the position indicated.

Please observe the following conditions for safe rear seating:

- Use only rear seats and rear bench seats approved for your vehicle.
- A rear seat or rear bench seat may be fitted facing the rear only if each seat has a seat opposite it – face-to-face position.

- Fit luxury rear seats on the first rear seat row and in the direction of travel only.
- Vehicles with a seat rail system in the vehicle floor:
  - Passengers may use the seats only if the rear seat and/or rear bench seat has engaged correctly (→ page 79).

Using the EASY-ENTRY easy entry and exit feature (rear bench seat)

WARNING Risk of accident and injury as a result of rear bench seat not being engaged

If the rear bench seat is not engaged, it may be flung around during travel.

▶ Always make sure that the rear bench seat is engaged as described.

To ensure that the rear bench seat can securely engage, keep the seat guide rails and anchorages in the vehicle floor free of dirt and foreign objects.

If the indicator tab of the seat anchorage is not retracted into the seat leg, the seat is not correctly engaged. Engage the seat again.

WARNING Risk of becoming trapped when adjusting the rear bench seat

When adjusting a rear bench seat, you or another vehicle occupant could become trapped by the guide rail of the rear bench seat, forexample.

▶ Make sure that no one has any part of their body within the sweep of the rear bench seat when adjusting it.

WARNING Risk of becoming trapped due to the rear bench seat not being engaged

The rear bench seat will not engage when folded forward. The rear bench seat may inadvertently fold back while the vehicle is accelerating, braking or changing direction suddenly or in the event of an accident, forexample.

People within the sweep of the rear bench seat may become trapped.

▶ Always fold back a rear bench seat that has been folded forward before you start driving.

▶ Ensure that the rear bench seat is engaged.

Folding the EASY-ENTRY section forwards/back

If you fold the EASY-ENTRY section of the rear bench seat forwards, it will be easier for you to get in and out of the vehicle.

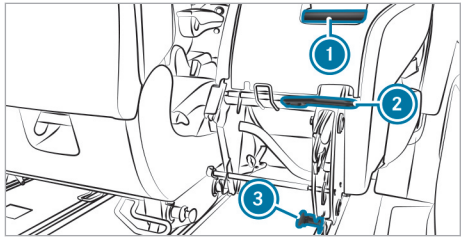

Rear bench seat with EASY-ENTRY feature (example: comfort rear bench seat)

1. Grab handle
2. EASY-ENTRY release handle
3. Release handle for front seat legs

▶ Pull EASY-ENTRY release handle 2 upwards.

▶ Fold the EASY-ENTRY section forwards with grab handle 1.

▶ **To fold the EASY-ENTRY section back:** fold the EASY-ENTRY section back until it engages in the seat anchorages. The indicator tab will no longer be visible.

ⓘ The EASY-ENTRY section is correctly engaged when the seat leg engages audibly and the indicator tab is no longer visible and is fully retracted into the seat leg.

Removing the EASY-ENTRY section

▶ Fold the seat backrest forward (comfort rear bench seat).

▶ Pull EASY-ENTRY release handle 2 upwards.

▶ Fold the EASY-ENTRY section forwards with the aid of grab handle 1.

▶ Pull release handle 3 for the front seat legs upwards.

▶ Fold the EASY-ENTRY section further forwards.

▶ Lift the EASY-ENTRY section up and out of the anchorage.

Installing the EASY-ENTRY section

▶ Place the front seat leg of the EASY-ENTRY section on the seat anchorages and engage it.

▶ Fold the EASY-ENTRY section back.
The rear seat leg of the EASY-ENTRY section will engage audibly. The indicator tab on the seat leg will no longer be visible.

ⓘ The EASY-ENTRY section is correctly engaged when the seat leg engages audibly and the indicator tab is no longer visible and is fully retracted into the seat leg.

▶ Fold the seat backrest back to the seat position (comfort rear bench seat).

Adjusting the seat backrest (comfort rear bench seat)

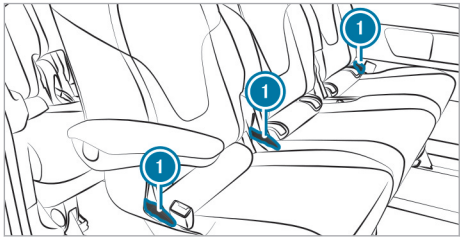

Only the seat backrests of a comfort rear bench seat can be adjusted.

▶ Pull release handle ① for the seat backrest upwards and hold it in position.

▶ Move the seat backrest to the desired position.

▶ Let go of release handle ① for the seat backrest and move the seat backrest slightly. The seat backrest will engage in position.

Moving the rear bench seat

⚠ **WARNING** Risk of becoming trapped when adjusting the rear bench seat

When adjusting a rear bench seat, you or another vehicle occupant could become trapped by the guide rail of the rear bench seat, forexample.

▶ Make sure that no one has any part of their body within the sweep of the rear bench seat when adjusting it.

⚠ **WARNING** Risk of injury due to moving the rear bench seat while the vehicle is in motion

If you move the rear bench seat while driving, the seat may move in an unexpected or jerking manner, forinstance when braking.

You could become trapped as well as thrown against parts of the vehicle or other vehicle occupants.

▶ Only move the rear bench seat when the vehicle is stationary.

▶ Make sure that the rear bench seat is engaged after it is moved.

⚠ **WARNING** Risk of injury due to no protective effect from the window airbag

If you move the seat position outside the marked area, the window airbag can no longer provide optimum protection.

The protective effect of the window airbag is gradually reduced and may in some positions no longer be provided at all.

▶ Engage the rear seats or the rear bench seat on the guide rail within the marked area.

⚠ **WARNING** Risk of injury from the front seat being positioned too close to vehicle occupants

If you move the rear seats or the rear bench seat outside the markings on the guide rail, this could result in the passenger striking their head on the front seat.

▶ Maintain a minimum clearance of 5 cm between the knees of the respective vehicle occupants and the seat in front of them.

Requirements

- The vehicle is equipped with a seat rail system in the vehicle floor.

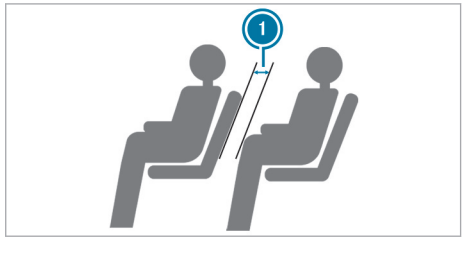

Maintain a minimum clearance of 5 cm ① between the knees of the vehicle occupants and the seat in front of them.

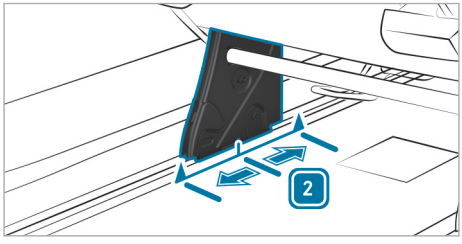

Starting from the basic setting 2, the rear bench seat for passengers can be moved forwards or backwards by 5 cm. In doing so, make sure that passengers have sufficient legroom to reduce the risk of injury during braking.

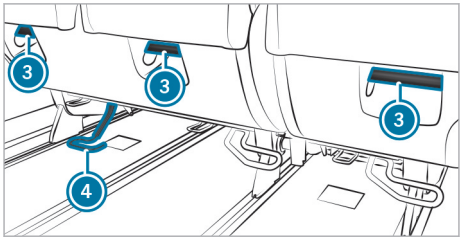

You can slide the rear bench seat only when it is unoccupied. If possible, slide the rear bench seat with the assistance of a second person.

- Pull up release handle 4 for seat fore-and-aft adjustment.
- Move the rear bench seat to the desired position by grab handles 3.
- Let go of release handle 4.
  Release handle 4 will fold down to its original position.
- Make sure that all sliders for fore-and-aft adjustment engage audibly on both sides.
  It will no longer be possible to move the rear bench seat.

Folding the rear bench seat forwards and backwards

WARNING Risk of accident and injury as a result of rear bench seat not being engaged

If the rear bench seat is not engaged, it may be flung around during travel.

- Always make sure that the rear bench seat is engaged as described.

To ensure that the rear bench seat can securely engage, keep the seat guide rails and anchorages in the vehicle floor free of dirt and foreign objects.

If the indicator tab of the seat anchorage is not retracted into the seat leg, the seat is not correctly engaged. Engage the seat again.

WARNING Risk of becoming trapped due to the rear bench seat not being engaged

The rear bench seat will not engage when folded forward. The rear bench seat may inadvertently fold back while the vehicle is accelerating, braking or changing direction suddenly or in the event of an accident, forexample.

People within the sweep of the rear bench seat may become trapped.

- Always fold back a rear bench seat that has been folded forward before you start driving.
- Ensure that the rear bench seat is engaged.

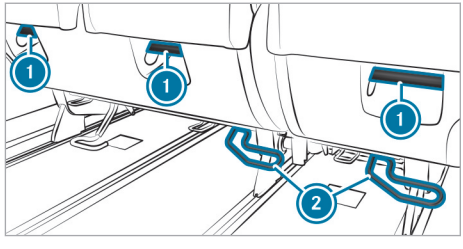

- Remove the head restraints (→ page 88).
- Vehicles with luxury rear bench seat: fold the seat backrest forwards (→ page 79).
- Pull release handles 2 for rear seat anchorage up.
- Grasp the rear bench seat by grab handles 1 and fold the seat forwards.

Installing and removing the comfort rear bench seat

WARNING Risk of accident and injury as a result of rear bench seat not being engaged

If the rear bench seat is not engaged, it may be flung around during travel.

- Always make sure that the rear bench seat is engaged as described.

Keep the seat anchorages in the vehicle floor free of dirt and objects at all times to ensure that the rear bench seat engages securely.

If the indicator tab of the seat anchorage is not retracted into the seat leg, the seat is not correctly engaged. Engage the seat again.

Removing the rear bench seat

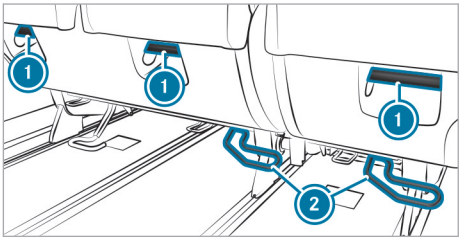

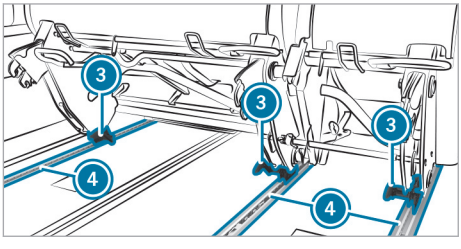

ⓘ In vehicles with a seat rail system, carry out the release, removal and subsequent reinstallation of the rear bench seats at the marked basic position only (→ page 79).

- ▶ Make sure that all sliders for fore-and-aft adjustment are engaged on both sides.
  It should not be possible to move the rear bench seat.
- ▶ Fold the rear bench seat forwards (→ page 80).
- ▶ Pull release handles ③ up.
- ▶ Hold the rear bench seat by grab handles ① and lift it out of seat anchorages ④.

ⓘ If the second rear seat row is to be removed or tilted, the seat or bench seat on the first rear seat row must first be tilted forward to avoid damage to the seats.

Installing the rear bench seat

- ▶ Grasp the rear bench seat by grab handles ① and insert it into front seat anchorages ④ from the front and above at an angle.
- ▶ Tilt the rear bench seat back and allow it to engage.
  Fold release handles ② down towards the vehicle floor.
- ▶ Fold the rear bench seat back into the seat position.

The rear seat legs of the rear bench seat are correctly engaged when the seat legs engage audibly and the indicator tabs on the seat legs are no longer visible and have fully retracted into the seat legs.

- ▶ Slide the rear bench seat into the basic setting (→ page 79).

Using the EASY-ENTRY easy entry and exit feature (rear seat)

⚠ **WARNING** Risk of accident- and injury if the seat is not engaged

If a seat is not engaged, it may be thrown about while the vehicle is moving.

- ▶ Always make sure that all seats are engaged as described.

In order to ensure that the seats can securely engage, keep the seat guide rails and anchorages in the vehicle floor free of dirt and foreign objects.

If the indicator tab of the seat anchorage is not retracted into the seat leg, the seat is not correctly engaged. Engage the seat again.

⚠ **WARNING** Risk of becoming trapped when adjusting the seats

When you adjust a seat, you may trap yourself or a vehicle occupant.

- ▶ When adjusting a seat, make sure that no one has any body parts in the sweep of the seat.

⚠ **WARNING** Risk of becoming trapped if the seat is not engaged

The seat does not engage when folded forwards. The seat can fold backwards unexpectedly, e.g. when accelerating, braking or in the event of an abrupt change of direction or an accident.

People in the seat's sweep can become trapped.

- ▶ If a seat is folded forwards, always fold it back before driving off.

▶ Make sure that the seat is engaged.

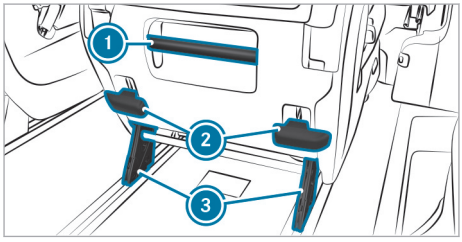

If you fold the rear seat forwards, it is easier for you to get in and out of the vehicle.

▶ **To fold the rear seat forwards:** pull one of the two EASY-ENTRY release handles ② upwards and fold the rear seat forwards.

▶ **To fold the rear seat back:** fold the rear seat back using grab handle ① until it engages in the seat anchorages.
Indicator tab ③ is no longer visible and is fully retracted into the seat leg.

Adjusting the seat backrest (rear seat)

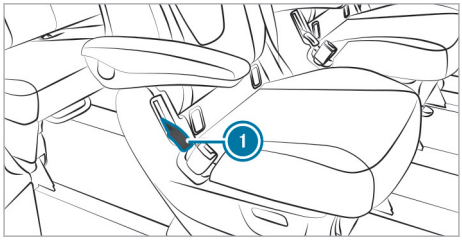

▶ Pull the release handle for seat backrest ① upwards and hold it in position.

▶ Move the seat backrest to the desired position.

▶ Let go of release handle ① for the seat backrest and move the seat backrest slightly.
The seat backrest will engage in position.

Moving the rear seat

⚠ WARNING Risk of becoming trapped when adjusting the seats

When you adjust a seat, you may trap yourself or a vehicle occupant.

▶ When adjusting a seat, make sure that no one has any body parts in the sweep of the seat.

⚠ WARNING Risk of injury due to moving the rear seat while the vehicle is in motion

If you move a rear seat while driving, the seat may move in an unexpected or jerking manner, forinstance when braking.

You could become trapped as well as thrown against parts of the vehicle or other vehicle occupants.

▶ Move a rear seat only when the vehicle is stationary.

▶ Make sure that the rear seat is engaged after it is moved.

⚠ WARNING Risk of injury due to no protective effect from the window airbag

If you move the seat position outside the marked area, the window airbag can no longer provide optimum protection.

The protective effect of the window airbag is gradually reduced and may in some positions no longer be provided at all.

▶ Engage the rear seats or the rear bench seat on the guide rail within the marked area.

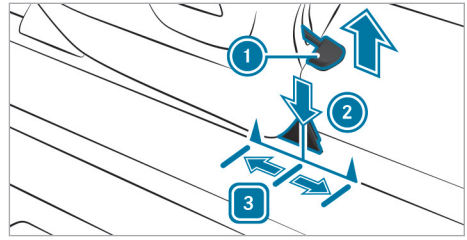

① Release handle for seat fore-and-aft adjustment
② Fore-and-aft setting marking
[3] Basic setting marking

Starting from the basic setting [3], the rear seats for passengers can be moved forwards or backwards by 5 cm. In doing so, make sure that passengers have sufficient legroom to reduce the risk of injury during braking.

▶ Pull release handle ① in the direction of the arrow.

▶ With the release handle pulled, slide the rear seat to the desired position.

▶ Release the release handle ①.

▶ Slide the rear seat forwards and backwards until the carriage is correctly engaged on both sides.
It should not be possible to move the seat.

Folding the rear seat forwards and backwards

⚠ WARNING Risk of becoming trapped when adjusting the seats

When you adjust a seat, you may trap yourself or a vehicle occupant.

▶ When adjusting a seat, make sure that no one has any body parts in the sweep of the seat.

⚠ WARNING Risk of accident- and injury if the seat is not engaged

If a seat is not engaged, it may be thrown about while the vehicle is moving.

▶ Always make sure that all seats are engaged as described.

In order to ensure that the seats can securely engage, keep the seat guide rails and anchorages in the vehicle floor free of dirt and foreign objects.

If the indicator tab of the seat anchorage is not retracted into the seat leg, the seat is not correctly engaged. Engage the seat again.

⚠ WARNING Risk of becoming trapped if the seat is not engaged

The seat does not engage when folded forwards. The seat can fold backwards unexpectedly, e.g. when accelerating, braking or in the event of an abrupt change of direction or an accident.

People in the seat's sweep can become trapped.

▶ If a seat is folded forwards, always fold it back before driving off.

▶ Make sure that the seat is engaged.

! NOTE Damage to the folding table or the armrest when the rear seats are folded forwards or backwards

If the folding table is not positioned all the way back when the rear seats are folded forwards or backwards, the folding table and/or the armrest of the rear seat may be damaged.

▶ Slide the folding table all the way back before folding the rear seats forwards or backwards.

! NOTE Damage to the cup holder by the rear seat

The cup holder may be damaged when you fold the rear seat of the third seat row forwards.

▶ Remove the cup holder before folding the seat forwards.

Folding the seat backrest forwards (table position)

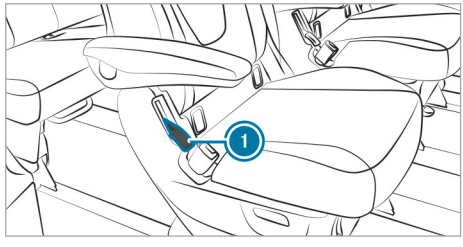

▶ Fold up the armrests (→ page 74).

▶ Pull release handle ① for the seat backrest upwards and fold the seat backrest forwards.

Folding the rear seat forwards

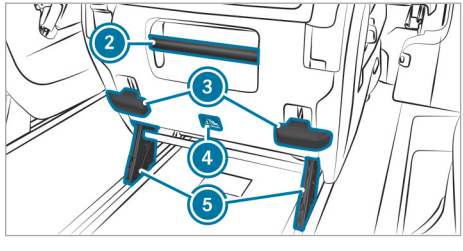

ⓘ Pictogram ④ on the seat reminds you not to travel sitting behind a seat that has been folded forwards.

▶ Slide the folding table to its rearmost position (→ page 94).

▶ Remove the head restraint (→ page 88).

▶ Fold the seat backrest forwards into the table position.

▶ Pull one of release handles ③ upwards.

▶ Grasp the seat by grab handle ② and fold the seat forwards.

▶ **To fold back the rear seat:** using grab handle ②, pull the seat backwards forcefully.
The rear seat legs will engage.

The rear seat legs of the rear seat are correctly engaged when the seat legs engage audibly and indicator tabs ⑤ on the seat legs are no longer visible and have fully retracted into the seat legs.

Installing and removing the rear seat

⚠ **WARNING** Risk of accident- and injury if the seat is not engaged

If a seat is not engaged, it may be thrown about while the vehicle is moving.

▶ Always make sure that all seats are engaged as described.

To ensure that the rear seats can securely engage, keep the seat guide rails and anchorages in the vehicle floor free of dirt and foreign objects.

If the indicator tab of the seat anchorage is not retracted into the seat leg, the seat is not correctly engaged. Engage the seat again.

⚠ **WARNING** Risk of injury or death when the last row of seats is rotated 180°.

The vehicle occupants of the rear seats can be endangered by unsecured cargo.

This poses an increased risk of injury or even fatal injury.

▶ When transporting cargo, never install the rear seats of the last row of seats rotated by 180°.

▶ Always properly stow and secure objects and cargo in the vehicle.

⚠ **WARNING** Risk of becoming trapped when adjusting the seats

When you adjust a seat, you may trap yourself or a vehicle occupant.

▶ When adjusting a seat, make sure that no one has any body parts in the sweep of the seat.

Removing

When installing and removing the rear seats with seat heating and seat ventilation or the luxury rear seats, note the routing of the cables and their original installation positions. Otherwise, you may damage the cables and the on-board computer may detect the seat position incorrectly.

Use only rear seats with seat heating and seat ventilation or luxury rear seats that were supplied with the vehicle. Due to the high-quality design and the technical equipment, Mercedes-Benz recommends that you have luxury rear seats installed at a qualified specialist workshop.

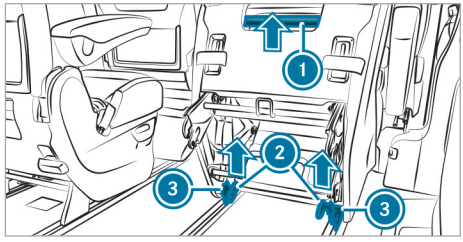

Rear seat folded forwards (example: standard rear seat)

▶ Make sure that all sliders for fore-and-aft adjustment are engaged on both sides.
It should not be possible to move the rear seat.

▶ Standard rear seat: fold the seat forwards (→ page 83).

▶ Luxury rear seat: fold the seat forwards (→ page 85).

ⓘ For rear seats with seat heating and seat ventilation or luxury rear seats, the electrical connector must also be disconnected.

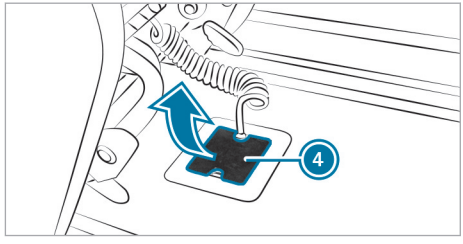

▶ Remove cover ④ of the floor socket.

▶ Remove the dummy cap from the bracket on the seat.

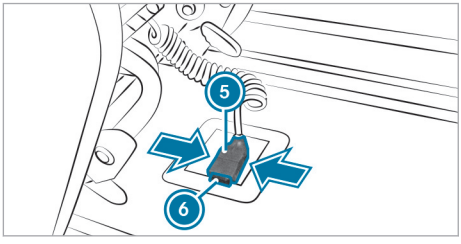

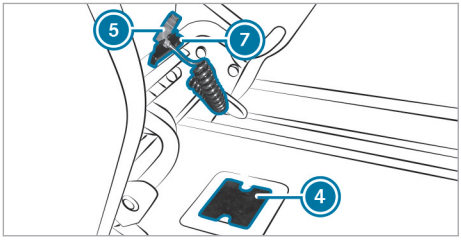

- Press in the sides of electrical connector (5) in socket (6) and remove.
- Insert the dummy cap into socket (6) and close the floor socket with cover (4).
- Secure electrical connector (5) onto bracket (7) on the seat.
- Grasp the seat by grab handle (1) and fold two release handles (2) upwards.
- Move the folded seat towards the front and lift it out.

Installing

- Hold the seat by grab handle (1).
- From above, guide the seat in a tilted position into front seat anchorages (3) and allow it to engage.

ⓘ For rear seats with seat heating and seat ventilation or luxury rear seats, the electrical connector must also be connected.

- Remove cover (4) of the floor socket and remove the dummy cap from socket (6).
- Remove electrical connector (5) for the seat ventilation and seat heating from bracket (7) and insert into socket (6).
- Attach the dummy cap to bracket (7) on the seat.
- Close the floor socket with cover (4).
- Fold the seat back to the table or seat position (→ page 83) and slide into the basic setting (→ page 82).

Using the EASY-ENTRY easy entry and exit feature (luxury rear seat)

WARNING Risk of accident- and injury if the seat is not engaged

If a seat is not engaged, it may be thrown about while the vehicle is moving.

- Always make sure that all seats are engaged as described.

In order to ensure that the seats can securely engage, keep the seat guide rails and anchorages in the vehicle floor free of dirt and foreign objects.

If the indicator tab of the seat anchorage is not retracted into the seat leg, the seat is not correctly engaged. Engage the seat again.

WARNING Risk of becoming trapped when adjusting the seats

When you adjust a seat, you may trap yourself or a vehicle occupant.

- When adjusting a seat, make sure that no one has any body parts in the sweep of the seat.

WARNING Risk of becoming trapped if the seat is not engaged

The seat does not engage when folded forwards. The seat can fold backwards unexpectedly, e.g. when accelerating, braking or in the event of an abrupt change of direction or an accident.

People in the seat's sweep can become trapped.

- If a seat is folded forwards, always fold it back before driving off.
- Make sure that the seat is engaged.

Folding the luxury rear seat forwards

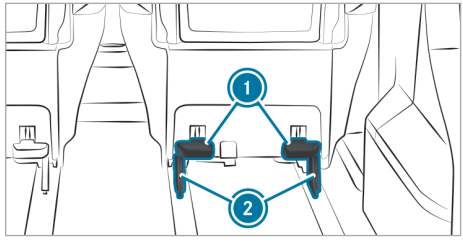

- Make sure that the rear seat is in the upright position and the leg rest is fully folded under the seat surface.
- Pull one of two EASY-ENTRY release handles ① upwards and fold the rear seat forwards.
- **To fold the luxury rear seat back:** fold the rear seat back until it engages into the seat anchorages.
  Indicator tab ② will no longer be visible and will be fully retracted into the seat leg.

Adjusting the luxury rear seat electrically

WARNING Risk of injury or death due to incorrect seat position

The seat belt will not offer the intended level of protection if you have not moved the seat backrest to an almost vertical position.

In particular, you may slip under the seatbelt and injure yourself.

- Adjust the seat properly before beginning your journey.
- Always ensure that the seat backrest is in an almost vertical position and that the shoulder section of your seat belt is routed across the centre of your shoulder.

WARNING Risk of becoming trapped if the seat is adjusted by children

Children could become trapped if they adjust the seats, particularly if they are unattended.

- When leaving the vehicle, always take the key with you and lock the vehicle.
- Never leave children unattended in the vehicle.

NOTE Damage to the leg rest due to overload

The leg rest can be damaged if it is loaded with more than 25 kg.

- Do not place more than 25 kg on the leg rest.

NOTE Damage to the leg rest due to manual adjustment

The leg rest can be damaged if it is adjusted manually.

- Only adjust the leg rest electrically.

NOTE Damage to the luxury rear seat due to incorrect position of the leg rest

If you turn the luxury rear seat's leg rest or set it in the longitudinal direction, the seat may be damaged.

- Only adjust the leg rest inclination as described in the following.

Requirements:

- The vehicle is switched on.

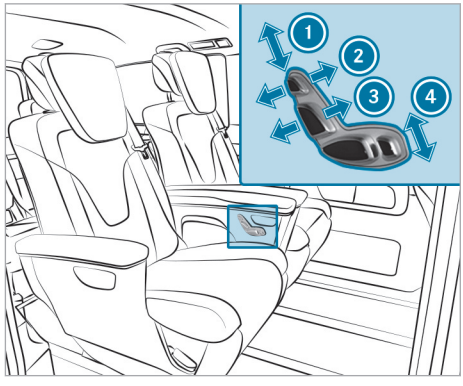

① Head restraint height adjustment
② Head restraint fore-and-aft adjustment
③ Seat backrest inclination adjustment
④ Leg rest inclination adjustment

- Adjust the luxury rear seat using the buttons on the left-hand side trim.

ⓘ You can save the settings for the luxury rear seats with the memory function (→ page 73).

ⓘ When the vehicle is switched on, you can use the USB ports in the front of the armrest to charge a USB device, such as a mobile phone, using a suitable charging cable.

Adjusting the upright position of the luxury rear seat

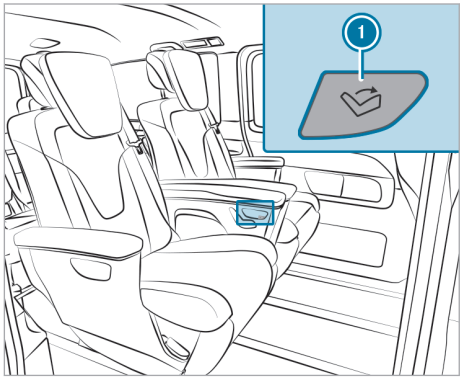

▶ Press button ① until the luxury rear seat is in the upright position and the leg rest is fully folded under the seat surface.

Setting the relaxation function

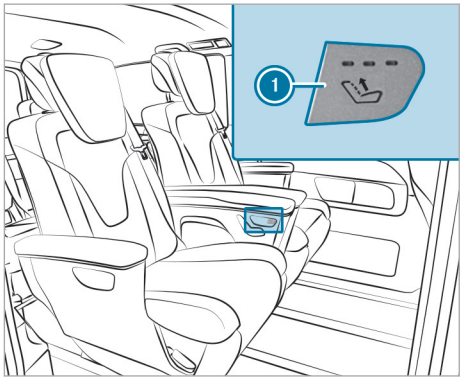

▶ **To switch on:** press button ① repeatedly until the desired relaxation program has been set.

▶ **To switch off:** press button ① until all indicator lamps are off.

Moving the luxury rear seat

⚠ **WARNING** Risk of becoming trapped when adjusting the seats

When you adjust a seat, you may trap yourself or a vehicle occupant.

▶ When adjusting a seat, make sure that no one has any body parts in the sweep of the seat.

⚠ **WARNING** Risk of injury due to moving the rear bench seat while the vehicle is in motion

If you move the rear bench seat while driving, the seat may move in an unexpected or jerking manner, forinstance when braking.

You could become trapped as well as thrown against parts of the vehicle or other vehicle occupants.

▶ Only move the rear bench seat when the vehicle is stationary.

▶ Make sure that the rear bench seat is engaged after it is moved.

⚠ **WARNING** Risk of injury due to no protective effect from the window airbag

If you move the seat position outside the marked area, the window airbag can no longer provide optimum protection.

The protective effect of the window airbag is gradually reduced and may in some positions no longer be provided at all.

▶ Engage the rear seats or the rear bench seat on the guide rail within the marked area.

⚠ **WARNING** Risk of injury from the front seat being positioned too close to vehicle occupants

If you move the rear seats or the rear bench seat outside the markings on the guide rail, this could result in the passenger striking their head on the front seat.

▶ Maintain a minimum clearance of 5 cm between the knees of the respective vehicle occupants and the seat in front of them.

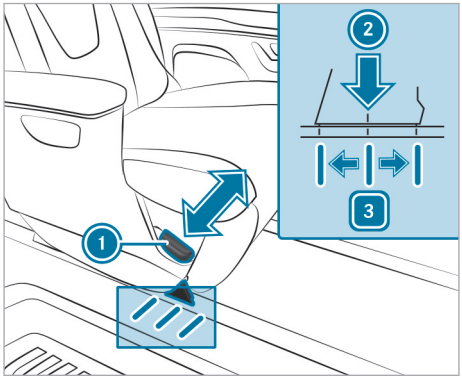

1 Release handle for seat fore-and-aft adjustment
2 Fore-and-aft setting marking
3 Basic setting marking

Starting from basic setting 3, you can move a luxury rear seat for vehicle occupants forwards or backwards by 5 cm. In doing so, make sure that vehicle occupants have sufficient legroom to reduce the risk of injury during braking.

- Pull release handle 1 in the direction of the arrow.
- With the release handle pulled, slide the luxury rear seat to the desired position.
- Let go of release handle 1.
- Slide the luxury rear seat forwards and backwards until the sliders engage correctly on both sides.
  It should not be possible to move the seat.

Moving the luxury rear seat from the second seat row

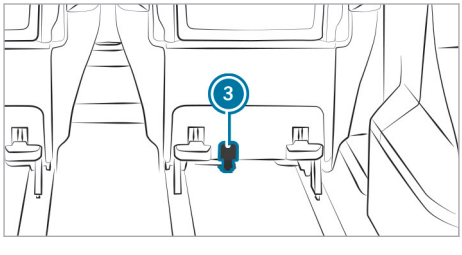

- Push lever 3 down.
- Slide the luxury rear seat forwards or backwards.

ⓘ A luxury rear seat is generally removed and installed in the same way as a standard rear seat (→ page 84). Due to the high-quality design and the technical equipment, Mercedes-Benz recommends that you have luxury rear seats installed at a qualified specialist workshop.

Head restraints

Adjusting the head restraint manually

⚠ **WARNING** Risk of accident due to adjusting the vehicle settings while the vehicle is in motion

You could lose control of the vehicle in the following situations in particular:

- if you adjust the driver's seat, the head restraint, the steering wheel or the mirror while the vehicle is in motion
- if you fasten your seat belt while the vehicle is in motion

- Before starting the vehicle: in particular, adjust the driver's seat, head restraint, steering wheel and mirror, and fasten your seat belt.

⚠ **WARNING** Risk of injury due to head restraints not being fitted or being adjusted incorrectly

If head restraints have not been installed or have not been adjusted correctly, there is an increased risk of injury in the head and neck area, e.g. in the event of an accident or when braking.

- Always drive with the head restraints fitted.
- Before driving off, make sure for every vehicle occupant that the centre of the head restraint supports the back of the head at about eye level.

Using the head restraint fore-and-aft adjustment, adjust the head restraint so that it is as close to the back of your head as possible.

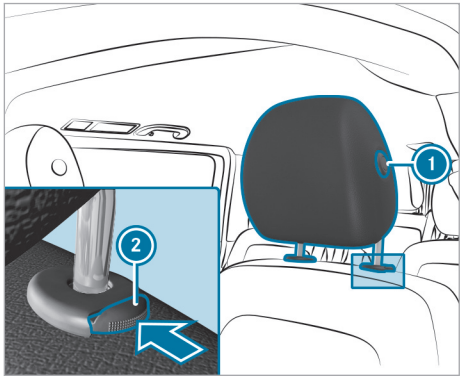

- **To raise:** pull the head restraint upwards into the desired position and ensure that it engages.
- **To lower:** press release button (2), slide the head restraint downwards into the desired position and ensure that it engages.
- **To move forward or backwards:** press release button (1) and pull the head restraint forwards or push it backwards until it engages in the desired position.
- **To remove:** press release button (2) and pull the head restraint up and out.
- **To fit:** press the head restraint with detent on the left-hand side when viewed in the direction of travel into the holes until it engages.

Adjusting the head restraint electrically

WARNING Risk of accident due to adjusting the vehicle settings while the vehicle is in motion

You could lose control of the vehicle in the following situations in particular:

- if you adjust the driver's seat, the head restraint, the steering wheel or the mirror while the vehicle is in motion
- if you fasten your seat belt while the vehicle is in motion

▶ Before starting the vehicle: in particular, adjust the driver's seat, head restraint, steering wheel and mirror, and fasten your seat belt.

WARNING Risk of injury due to head restraints not being fitted or being adjusted incorrectly

If head restraints have not been installed or have not been adjusted correctly, there is an increased risk of injury in the head and neck area, e.g. in the event of an accident or when braking.

▶ Always drive with the head restraints fitted.

▶ Before driving off, make sure for every vehicle occupant that the centre of the head restraint supports the back of the head at about eye level.

Do not interchange the head restraints of the front and rear seats. Otherwise, you will not be able to set the height and inclination of the head restraints to the correct position.

Adjust the mechanical head restraint fore-and-aft position so that it is as close as possible to the back of your head.

NOTE Damage to the electrical head restraint when adjusted manually

If the height of the electrically adjustable head restraint is adjusted manually, this can damage the mechanism of the head restraint.

▶ Adjust the height of the electrically adjustable head restraints using the buttons in the door trim.

Requirements:
- The vehicle is switched on or the door is open.

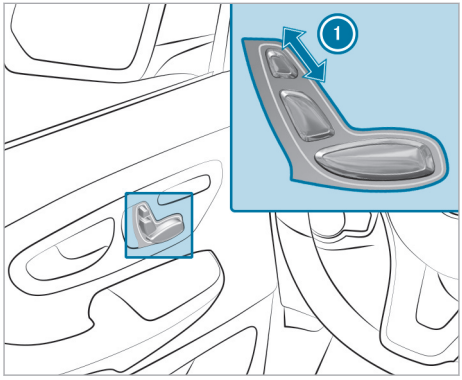

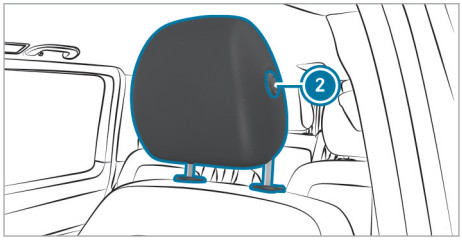

▶ **To adjust the height:** push button 1 up or down in the direction of the arrow.

Moving forward or back

▶ Press and hold release knob 2.

▶ Push the head restraint forwards or backwards until it engages in the desired position.

ⓘ If the vehicle is not switched on, you can adjust the head restraint height within 30 seconds of unlocking the vehicle.

Adjusting the head restraint on a luxury rear seat

Adjusting the side bolsters

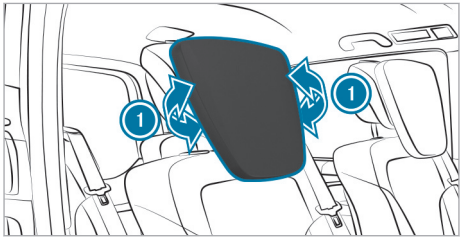

▶ Push or pull right-hand and left-hand side bolster 1 into the desired position.

Adjusting the head restraint electrically

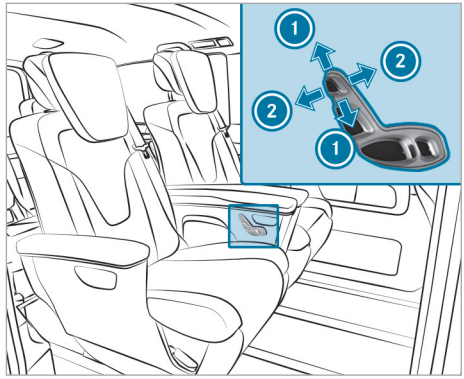

▶ Switch on the vehicle.

▶ **To adjust the height:** slide the button up or down in the direction of arrow 1.

▶ **To adjust the longitudinal direction:** slide the button forwards or backwards in the direction of arrow 2.

Switching the seat heating on/off

⚠ **WARNING** Risk of burns due to repeatedly switching on the seat heating

Repeatedly switching on the seat heating can cause the seat cushion and seat backrest padding to become very hot.

In particular, the health of persons with limited temperature sensitivity or a limited ability to react to high temperatures may be affected or they may even suffer burn-like injuries.

▶ Do not repeatedly switch on the seat heating.

To protect against overheating, the seat heating may be temporarily deactivated after it is switched on repeatedly.

! **NOTE** Damage to the seat heating due to overheating

The seat heating may overheat if the seat is unoccupied when the seat heating is switched on or if objects are placed on the seat.

- ▶ Switch off the seat heating when the seat is unoccupied.
- ▶ Do not place any objects on the seat when the seat is unoccupied.

Requirements:

- The power supply is switched on.

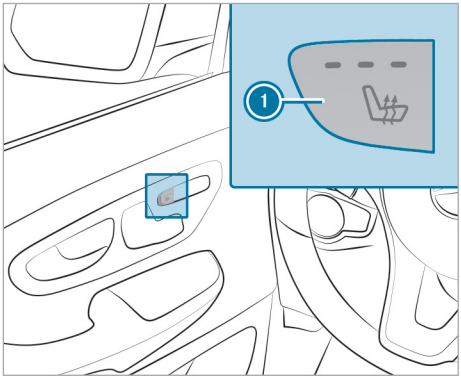

Front seat

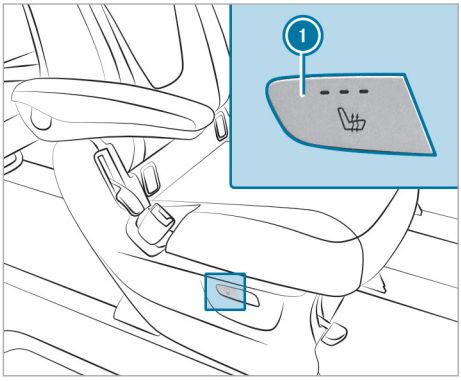

Comfort rear seat

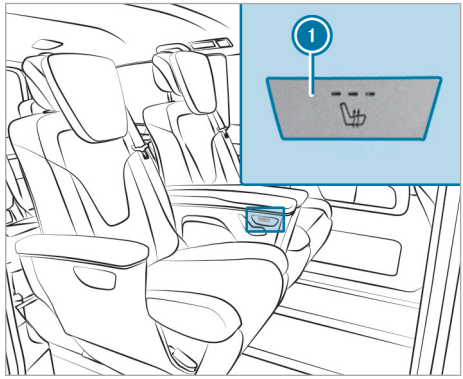

Luxury rear seat

- ▶ **To switch on / increase the level:** press button (1) repeatedly until the desired heating level is set.
  Depending on the heating level, one to three indicator lamps will light up.
- ▶ **To switch off / reduce the level:** press button (1) repeatedly until the desired heating level is set.
  When all indicator lamps are off, the seat heating is switched off.

ⓘ The seat heating will automatically switch back out of the three heating levels after 7, 10 and 20 minutes until the seat heating switches off.

ⓘ Rear seat heating activation is possible only once the vehicle has been switched on.

Switching the seat ventilation on and off

Requirements:
- The power supply is switched on.

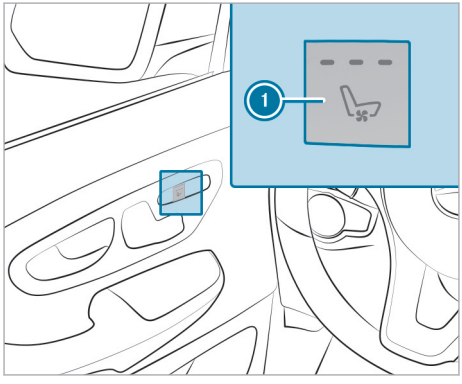

Front seat

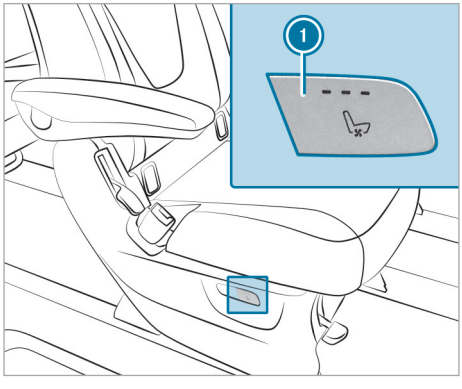

Comfort rear seat

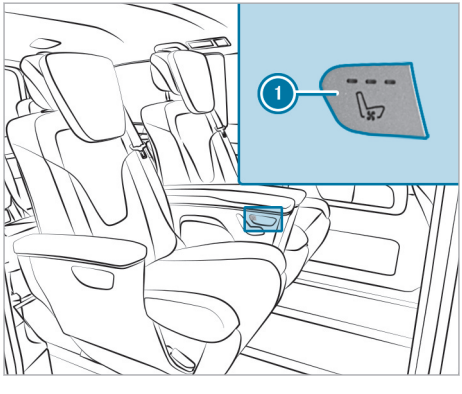

Luxury rear seat

▶ Make sure that the air inlet grilles on the back of the seat backrest are not covered.

▶ **To switch on/increase the level:** press button (1) repeatedly until the desired blower setting is set.
Depending on the blower setting, one to three indicator lamps will light up.

▶ **To switch off/reduce the level:** press button (1) repeatedly until the desired blower setting is set.
If all indicator lamps are off, the seat ventilation is switched off.

ⓘ The convenience opening function automatically switches the seat ventilation for the driver's seat to the highest blower setting (→ page 123).

ⓘ Rear seat ventilation activation is possible only once the vehicle has been switched on.

Steering wheel

Adjusting the steering wheel

⚠ **WARNING** Risk of accident due to adjusting the vehicle settings while the vehicle is in motion

You could lose control of the vehicle in the following situations in particular:
- if you adjust the driver's seat, the head restraint, the steering wheel or the mirror while the vehicle is in motion
- if you fasten your seat belt while the vehicle is in motion

▶ Before starting the vehicle: in particular, adjust the driver's seat, head restraint, steering wheel and mirror, and fasten your seat belt.

⚠ **WARNING** Risk of accident due to unlocked steering wheel

The steering wheel may move unexpectedly if it is unlocked while the vehicle is in motion.

▶ Make sure that the steering wheel is locked before driving off.

▶ Never unlock the steering wheel when the vehicle is in motion.

WARNING Risk of entrapment for children when adjusting the steering wheel

Children could injure themselves if they adjust the steering wheel.

- Never leave children unattended in the vehicle.
- When leaving the vehicle, always take the key with you and lock the vehicle.

Adjusting the steering wheel

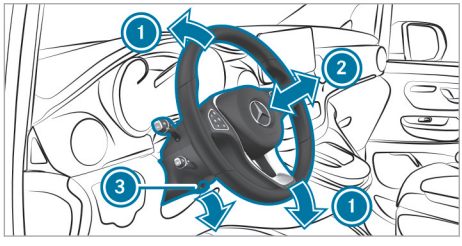

- **To unlock:** push release lever (3) down as far as it will go.
  The steering column is unlocked.
- Adjust height (1) and distance (2) to the steering wheel.
- **To lock:** push release lever (3) up as far as it will go.
  The steering column is locked.

Stowage areas

Stowage spaces and stowage compartments

Opening and closing the stowage compartment in the centre console

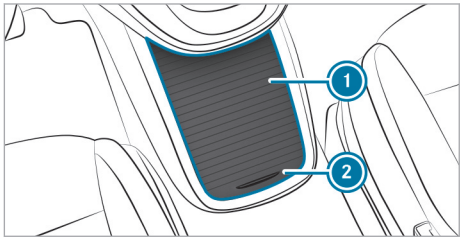

- Slide cover (1) of the centre console up or down using handle (2).

The following can be found in the stowage compartment of the centre console depending on the vehicle's equipment:

- A 12 V socket (→ page 99) or the cigarette lighter (→ page 98)
- The Media Interface with two USB ports or with two USB ports and one SD card slot
- The holder for the mobile phone cradle
- The ashtray (→ page 98)
- A stowage compartment or a device installation frame for auxiliary equipment, e.g. a tachograph

Opening and closing the stowage compartment under the armrest

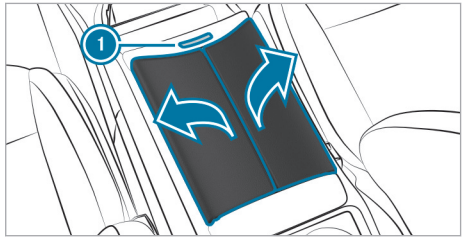

- **To open:** press button (1).
  The stowage compartment will open.
- **To close:** press to close the flaps of the stowage compartment in any order.

The following can be found in the stowage compartment under the armrest depending on the vehicle's equipment:

- The Media Interface with two USB ports or with two USB ports and one SD card slot
- The refrigerator box (→ page 100)

Opening and closing the glove compartment

WARNING Risk of injury due to objects being stowed incorrectly

If objects in the vehicle interior are stowed incorrectly, they can slide or be thrown around and hit vehicle occupants. In addition, cup holders, open stowage spaces and mobile phone brackets cannot always retain all objects they contain.

There is a risk of injury, particularly in the event of sudden braking or a sudden change in direction.

- Always stow objects in such a way that they cannot be thrown around in such situations.
- Always make sure that objects do not protrude from stowage spaces, luggage nets or stowage nets.
- Close the lockable stowage spaces before starting a journey.
- Always stow and secure heavy, hard, pointed, sharp-edged, fragile or bulky objects in the boot.

Observe the notes on loading the vehicle.

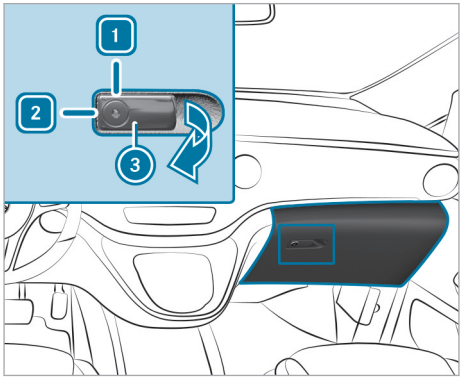

1 Unlocked
2 Locked
3 Glove compartment handle

- **To lock/unlock:** turn the emergency key a quarter turn anti-clockwise 2 (to lock) or clockwise 1 (to unlock).
- **To open:** pull glove compartment handle 3 in the direction of the arrow.
- **To close:** fold the glove compartment handle up and press on it until it engages.

Opening the glasses compartment

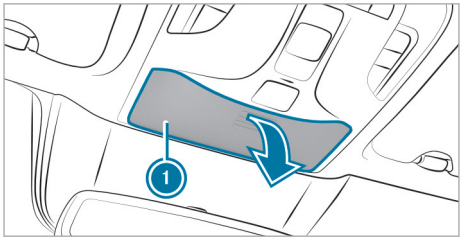

- Press on glasses compartment 1.

Folding table

Installing and removing the folding table

WARNING Risk of injury from unsecured items in the vehicle

If objects, luggage or loads are not secured or not secured sufficiently, they could slip, tip over or be thrown around and thereby hit vehicle occupants.

There is a risk of injury, particularly in the event of sudden braking or a sudden change in direction.

- Always stow objects in such a way that they cannot be thrown around.
- Before the journey, secure objects, luggage or loads against slipping or tipping over.

WARNING Risk of accident- and injury due to the folding table not being engaged

The folding table can come loose and be flung around while the vehicle is in motion.

- Install the folding table as described.
- Only move the folding table when the vehicle is stationary.
- Ensure that the folding table is correctly engaged.

NOTE Damage to the folding table or the armrest when the rear seats are folded forwards or backwards

If the folding table is not positioned all the way back when the rear seats are folded forwards or backwards, the folding table and/or the armrest of the rear seat may be damaged.

- Slide the folding table all the way back before folding the rear seats forwards or backwards.

Installing the folding table

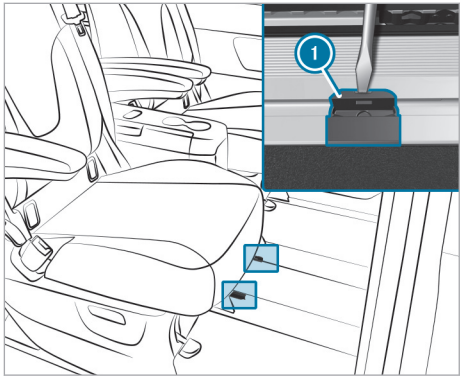

- Observe the notes on loading (→ page 204).
- Push the anterior rear seats back fully or, if necessary, remove them.
- Lift both covers 1 out of the guide rails slightly using a suitable tool, e.g. a screwdriver.

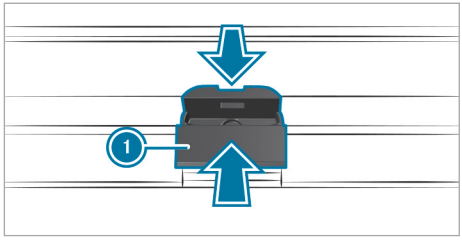

- Press both covers 1 together slightly and remove them from guide rails .
  The openings in the rail for the middle slides on the underside of the folding table will be open.
- Rotate the folding table until the arrow on the underside of the folding table is pointing in the direction of travel.

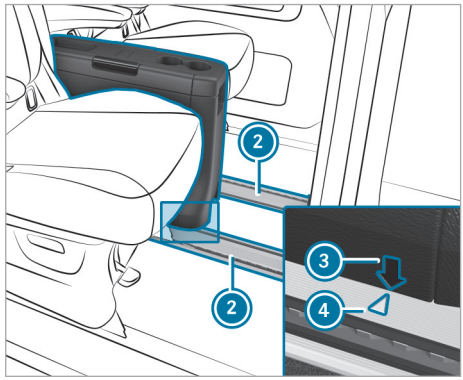

Installation position

- Insert the folding table into guide rails 2 such that arrows 3 on the folding table point to both markings 4 on guide rails 2.
  The guides and slides on the underside of the folding table will fit into the guide rails.

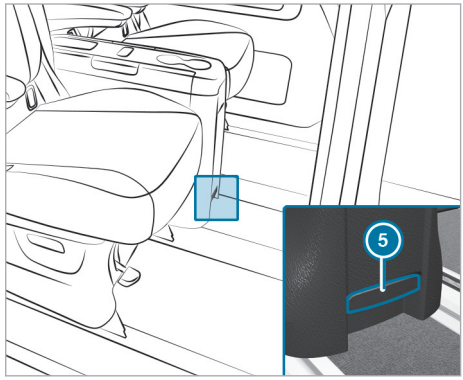

- Pull lever 5 on the front or rear side of the folding table upwards and push the folding table backwards.

Press both covers 1 together slightly and engage them in the openings of the guide rails.

Moving the folding table

- Pull and hold lever 5 and move the folding table into the desired position.
- Release lever 5.
- Move the folding table until it automatically engages in the next possible position.
- After repositioning the table, ensure that the folding table is properly secured again.

Removing the folding table

- Fold in the table panels and retract the table.
- Push the anterior rear seats back fully or, if necessary, remove them.
- Push the folding table back so that covers ① of the openings in the rail can be removed.
- Lift both covers ① out of the guide rails slightly using a suitable tool, e.g. a screwdriver.
- Press both covers ① together slightly and remove them from guide rails ②.
  The openings in the rail for the middle slides on the underside of the folding table will be open.
- Push the folding table forwards into the installation position.
  Arrows ③ on the folding table will point to both markings ④ on guide rails ②.
- Lift the folding table out of guide rails ②.
- Press both covers ① together slightly and engage them in the openings of guide rails ②.

Using the folding table

Extending the folding table

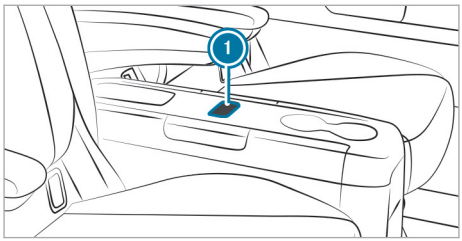

- Press button ① all the way down and release it.
  The folding table will move upwards and engage automatically.

Retracting the folding table

- Press button ① all the way down and simultaneously press the centre section of the folding table downwards.
- Release button ① when the folding table is in its retracted position.
  The centre section of the folding table will engage automatically.

Folding the table panel in and out

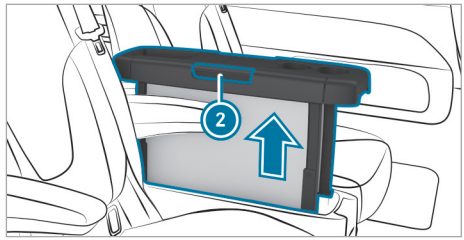

- **To fold out the table panel:** pull out the table panels upwards to the stop using handles ② and swing them to the side until they engage.

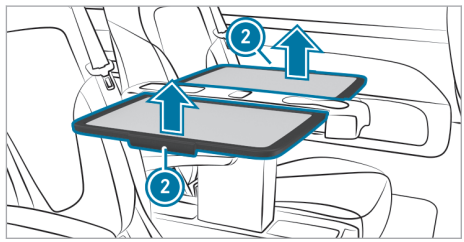

- **To fold in the table panel:** swing the table panels upwards using handles ② and slide them vertically downwards into the table.

Installing and removing the insert

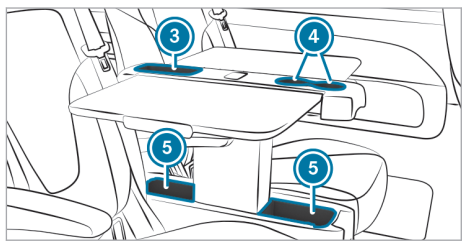

③ Recess on the folding table
④ Cup holders
⑤ Inserts

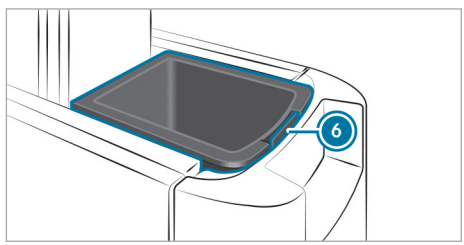

- **To remove:** press lug ⑥ and remove the insert.
- **To install:** put in the insert and press it down until it engages.

Information about the bottle holder

The bottle holders are in front of the stowage compartments in the front doors.

There are additional bottle holders on the left and right in the rear compartment side trim.

Cup holder

Opening the cup holder on the luxury seat

WARNING Risk of accident or injury if the cup holder is used while the vehicle is in motion

Cup and bottle holders cannot keep containers secure while the vehicle is in motion.

If you use a cup or bottle holder while the vehicle is in motion, the container may be flung around and liquids could be spilled. Vehicle occupants may come into contact with the liquid and if it is hot, they could be scalded. You could be distracted from traffic conditions and you may lose control of the vehicle.

- Use the cup and bottle holders only when the vehicle is stationary.
- Place only suitable containers in the cup and bottle holders.
- Close the containers, particularly if the liquid is hot.

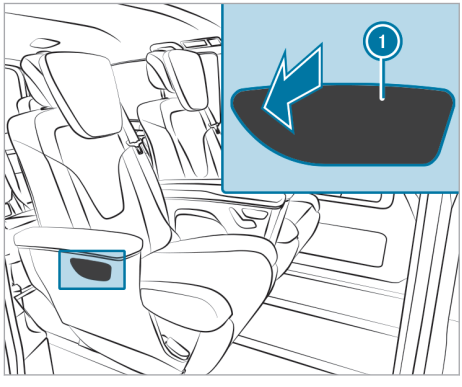

- **To open:** press cup holder ①.
  Cup holder ① will fold out forwards.
- **To close:** fold cup holder ① back in until it engages.

Inserting the cup holder in the rear passenger compartment

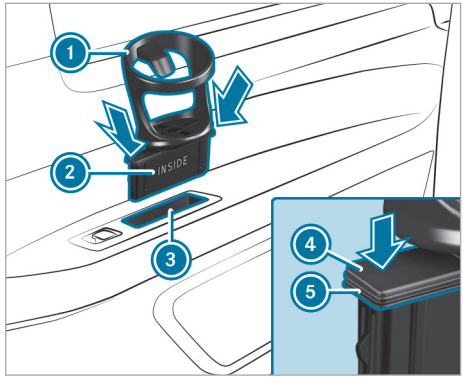

- Position cup holder ① above stowage compartment ③ so that the lettering "INSIDE" on its base ② faces towards the vehicle interior.
- Insert base ② into stowage compartment ③ and press down on both sides.

The cup holder is correctly inserted when both sealing rings ⑤ are inserted in stowage compartment ③ and upper edge ④ of the base locks positively with stowage compartment ③.

- **To remove:** grasp the bottom of cup holder ① from below and remove it by lifting its base ② out vertically.

Switching the temperature-controlled cup holder on and off

Requirements:

- The vehicle is switched on.

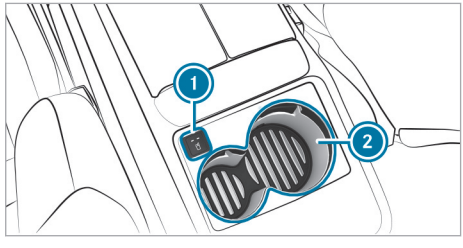

- **To switch on:** press button ① repeatedly until the blue (keep cool) or red (keep warm) indicator lamp on the button lights up.
- **To switch off:** press button ① repeatedly until the indicator lamp on the button goes out.

ⓘ Clean the removable rubber mat only with clean, lukewarm water and cup holder ② only with a damp cloth.

Ashtray and cigarette lighter

Using ashtrays

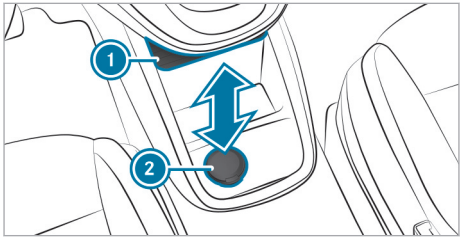

- Slide cover ① of the centre console upwards (→ page 93).
- Insert the ashtray with cap ② into a cup holder in the centre console with cover or into a cup holder in the rear passenger compartment.

Using the ashtray and cigarette lighter in the rear passenger compartment

⚠ WARNING Risk of fire and injury from hot cigarette lighter

You can suffer burns if you touch the hot heating element or the hot socket of the cigarette lighter.

In addition, flammable materials can catch fire if:

- you drop the hot cigarette lighter.
- children e.g. hold the hot cigarette lighter to objects.

- Always hold the cigarette lighter by the knob.
- Always make sure that the cigarette lighter is out of the reach of children.
- Never leave children unattended in the vehicle.

Requirements:

- The vehicle is switched on.

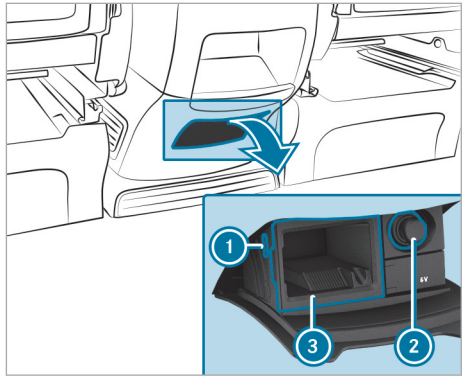

- Pull down the cover.
- **To use the cigarette lighter:** press cigarette lighter ②.
  The cigarette lighter will pop out when the heating element is red-hot.
- **To remove the ashtray:** press ribbing ① and remove insert ③.
- **To insert the ashtray:** push in insert ③ from above and press it into the holder until it engages.

Using the cigarette lighter

⚠ WARNING Risk of fire and injury from hot cigarette lighter

You can suffer burns if you touch the hot heating element or the hot socket of the cigarette lighter.

In addition, flammable materials can catch fire if:

- you drop the hot cigarette lighter.
- children e.g. hold the hot cigarette lighter to objects.

- Always hold the cigarette lighter by the knob.
- Always make sure that the cigarette lighter is out of the reach of children.
- Never leave children unattended in the vehicle.

Requirements:
- The power supply is switched on.

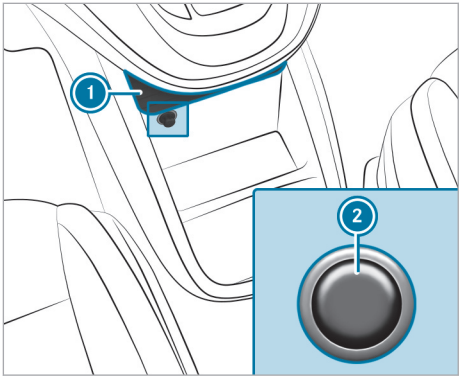

Cigarette lighter in the centre console (example: centre console with cover)

▶ Slide cover ① of the centre console upwards (⟶ page 93).

▶ Press in cigarette lighter ②.

ⓘ You can use the cigarette lighter socket for accessories with a maximum current draw of 180 W (15 A) (⟶ page 99).

Sockets

Using the 12 V socket

Requirements:
- The power supply has been switched on.
- Only devices with up to a maximum of 180 watts (15 A) are permissible.

Your vehicle may be equipped with the following 12 V sockets:
- In the front centre console
- In the side trim in the rear passenger compartment
- In the side trim in the load compartment

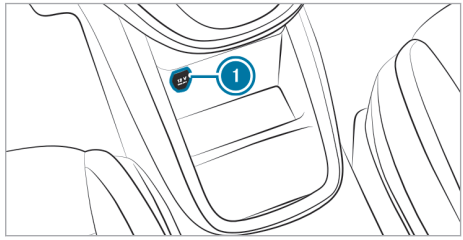

Example: 12 V socket

▶ Fold up cover ① of the socket.

▶ Insert the plug of the device.

Using the 230 V socket

⚠ **DANGER** Risk of fatal injuries due to damage from a connecting cable or socket

You could receive an electric shock when pulling the connecting cable or the 230 V power socket out of the trim, or if it is damaged or wet.

▶ Use only connecting cables that are dry and free of damage.

▶ When the vehicle is switched off, make sure that the 230 V power socket is dry.

▶ Immediately have the 230 V power socket checked or replaced at a qualified specialist workshop if it is damaged or has been pulled out of the trim.

▶ Never plug the connecting cable into a 230 V power socket that is damaged or has been pulled out of the trim.

⚠ **DANGER** Risk of death due to using the socket incorrectly

In particular, you could receive an electric shock:
- if you touch the inside of the socket
- if you insert unsuitable devices or objects into the socket

▶ Do not touch the inside of the socket.

▶ Only connect suitable devices to the socket.

DANGER Risk of fatal injuries due to electric shock

If you clean the 230 V socket with a wet cloth, you can receive an electric shock.

There is a risk of fatal injury!

▶ Avoid the area around the 230 V socket when cleaning.

Requirements:

- only connect devices with a suitable plug which conforms to the standards specific to the country you are in
- a device up to a maximum of 150 W (0.65 A) is used
- do not use multiple socket outlets
- the on-board electrical system battery is sufficiently charged
- the electronic device plug is inserted fully into the 230 V socket

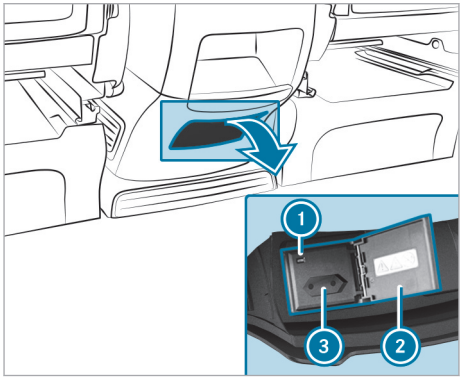

▶ Open flap ②.

▶ Insert the plug of the device into 230 V socket ③.
When the on-board electrical system voltage is sufficient, indicator lamp ① lights up.

If you will not be using the 230 V power socket, keep the flap closed.

Overview of the USB ports

When the vehicle is switched on, you can charge a USB device, such as a mobile phone, at the USB ports using a suitable charging cable.

ⓘ Smartphone Integration: you can connect your phone to the multimedia system via a USB port marked with the [ ] symbol (→ page 185).

Depending on its equipment, the vehicle has the following USB ports:

- in the stowage compartment in the centre console (→ page 93)
- in the stowage compartment under the armrest (→ page 93)
- in the front of the armrest on a luxury rear seat

Switching the refrigerator box in the centre console on and off

WARNING Risk of fire due to a covered ventilation grille on the coolbox

If you cover the ventilation grille for the coolbox, it may overheat.

▶ Always make sure that the ventilation grille is not covered.

The coolbox ventilation grille is between the front seat base and the centre console sidewall.

Requirements:

- The vehicle is switched on.
- The stowage compartment under the armrest is open (→ page 93).

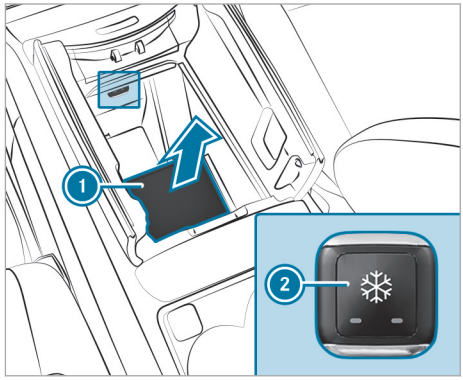

The refrigerator box can bear a maximum load of 3.5 kg.

▶ **To open:** fold cover ① upwards.

▶ **To switch the cooling level to low:** press button ② for approximately two seconds.

▶ **To switch the cooling level to high:** press button ② again.

▶ **To switch off:** press button ② for approximately two seconds until all indicator lamps go out.

ⓘ If you do not need to use the refrigerator box for an extended period, you should switch it off, defrost it and clean it. After doing so, leave the lid open for a time.

Exterior lighting

Notes on adjusting the lights when driving abroad

Low beam

In countries in which traffic drives on the opposite side of the road from the country in which the vehicle is registered, you will have to switch the headlamps to symmetrical dipped beam. This will prevent oncoming traffic from being dazzled. Symmetrical dipped beam will no longer illuminate the edge of the carriageway as far or as high.

Vehicles with halogen headlamps:

It is not necessary to change the headlamps over to symmetrical dipped beam. The statutory requirements of the countries in which traffic drives on the opposite side of the road from the country in which the vehicle is registered are also met without changing over.

Vehicles with LED headlamps:

You can set the low beam for driving on the right or left via the on-board computer (→ page 177).

Information about lighting systems and your responsibility

The vehicle's various lighting systems are only aids. The vehicle driver is responsible for adjusting the vehicle's lighting to the prevailing light, visibility, statutory conditions and traffic conditions.

Light switch

Operating the light switch

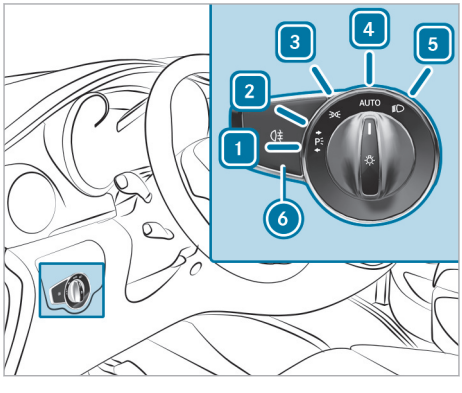

1 ⇐P≤ Left parking lights
2 P≤⇒ Right parking lights
3 ≥DC≤ Standing lights and licence plate and instrument lighting
4 AUTO Automatic driving lights (preferred light switch position)
5 ≡D Low beam or high beam
6 0≠ Rear fog light

If you hear a warning tone when exiting the vehicle, the lights may still be on.

▶ Turn the light switch to AUTO.

The exterior lighting (except standing and parking lights) will automatically switch off in the following cases:

- If you remove the key from the ignition lock.
- If you open the driver's door while the ignition lock is in position 0.

Switching on the daytime running lights

▶ Turn light switch to AUTO.

Automatic driving lights function

The standing lights, low beam and daytime running lights will be switched on automatically depending on the vehicle status and the light conditions.

> ⚠ **WARNING** Risk of accident when the dipped beam is switched off in poor visibility
>
> When the light switch is set to AUTO, the dipped beam may not be switched on automatically if there is fog, snow or other causes of poor visibility such as spray.
>
> ▶ In such cases, turn the light switch to ≡D.

The automatic driving lights are only an aid. Responsibility for vehicle lighting rests with you.

If the standing lights and low beam have been switched on, the green ≥DC≤ (standing lights) and ≡D (low beam) indicator lamps on the instrument cluster will light up.

Activating/deactivating the fog lights

Requirements:

- The light switch is in the ≡D or AUTO position.
- The power supply or the vehicle has been switched on.

▶ **To switch the rear fog light on or off:** press the 0≠ button.

Comply with the country-specific regulations for using the rear fog lamp.

Adjusting headlamp range

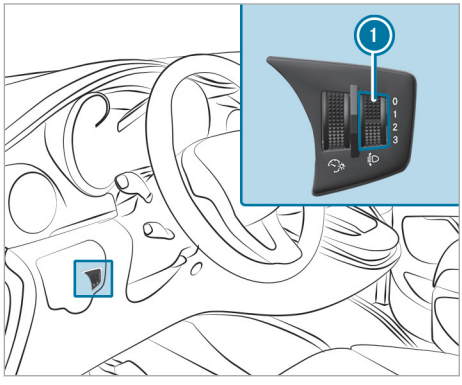

- Turn headlamp range adjuster (1) to the required position.
- If the vehicle is unladen, select position [0].

The illumination of the road should be 40 m to 100 m and the low beam must not dazzle oncoming traffic.

You can use the headlamp range adjuster to adjust the light cone of the headlamps to your vehicle's load condition. As the seats are occupied or the load compartment is loaded or unloaded, the light cone changes. This may cause visibility conditions to deteriorate and you could dazzle oncoming traffic.

Operating the combination switch for the lights

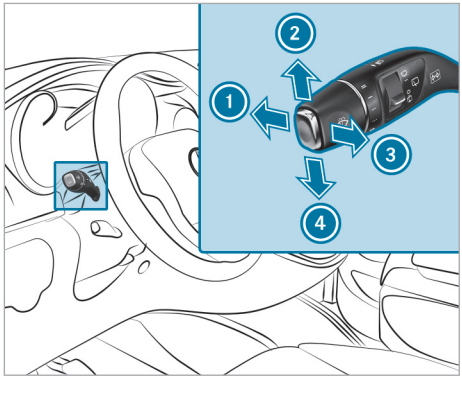

(1) High beam
(2) Turn signal light, right
(3) Headlamp flashing
(4) Turn signal light, left

- Use the combination switch to select the desired function.

Switching on high beam

- Switch on the low beam (→ page 102).
- Push the combination switch forwards (1). The [≡D] indicator lamp on the instrument cluster will light up.

ⓘ In the [AUTO] position, high beam will switch on only in darkness and when the vehicle is switched on.

Headlamp flashing

- Briefly pull the combination switch in the direction of arrow (3).

Turn signal lights

- **To indicate:** push the combination switch in the required direction (2) or (4) until it engages. When significant steering movements are made, the combination switch will automatically reset itself.
- **To indicate briefly:** tap the combination switch briefly in the required direction (2) or (4). The corresponding turn signal lamp will flash three times.

Switching the hazard warning light system on/off

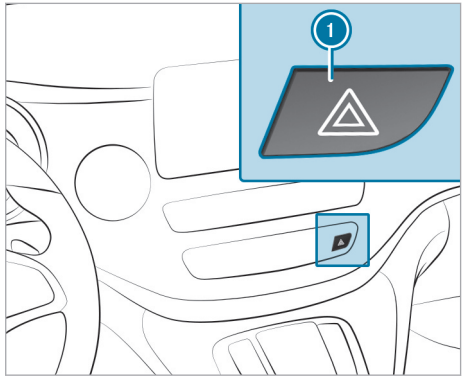

- Press the (1) button.

If you operate a turn signal indicator while the hazard warning light system is switched on, only the turn signal lamps on the relevant side of the vehicle will light up.

The hazard warning light system will switch on automatically in the following situations:

- The airbag is deployed
- The vehicle is heavily braked from a speed of more than 70 km/h to a standstill.

The hazard warning light system will automatically switch off when the vehicle regains a speed of more than 10 km/h after maximum full-stop braking.

Intelligent Light System

Intelligent Light System function

The Intelligent Light System adapts the headlamps' lighting function to the current driving and weather situation.

The system comprises the following functions:

- Active headlamps (→ page 104)
- Cornering light (→ page 104)
- Motorway mode (→ page 104)
- Enhanced fog light function (→ page 104)

You can switch the Intelligent Light System function on or off via the on-board computer (→ page 105).

Active light function

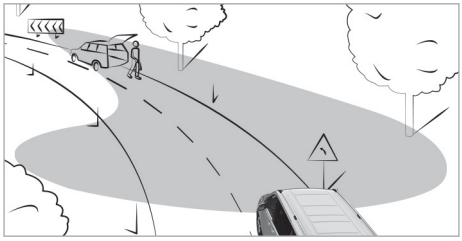

The active light function has the following functions:

- The headlamps follow the steering movements.
- Relevant areas are better illuminated during a journey.

The functions will be active when low beam is switched on.

The active light function enables pedestrians, cyclists and animals to be detected at an earlier stage, for example.

Cornering light function

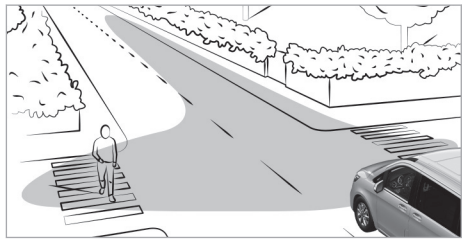

The function is active under the following conditions:

- Your speed is less than 40 km/h and the turn signal light has been switched on or the steering wheel is turned.
- Your speed is between 40 km/h and 70 km/h and the steering wheel is turned.

The cornering light may still light up for a short time but will be switched off automatically after a maximum of three minutes.

Motorway mode function

Motorway mode increases the range and brightness of the cone of light, enabling better visibility.

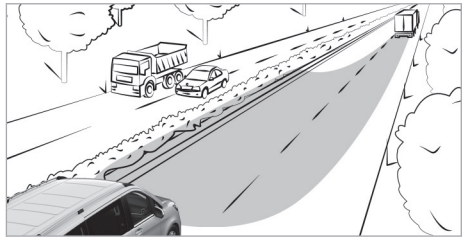

Motorway mode will automatically be activated in the following cases:

- Your speed is greater than 110 km/h and the vehicle has covered at least 1,000 m without any significant steering movement.
- Your speed is greater than 130 km/h.

If your speed falls below 80 km/h after motorway mode has been activated, it will automatically be deactivated.

Enhanced fog light function

The enhanced fog light function reduces self-dazzling and improves the illumination of the edge of the carriageway.

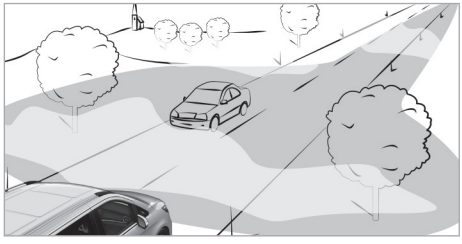

If your speed is below 70 km/h and the rear fog light has been switched on, the enhanced fog light function will automatically be activated.

The enhanced fog light function will automatically be deactivated after activation in the following cases:

- Your speed is greater than 100 km/h.
- The rear fog light will be switched off.

Switching the Intelligent Light System on/off

▶ Press the [⌂] button to call up the list of menus.

▶ Use the [▼] or [▲] button to select Settings.

▶ Press button [OK] .

▶ Use the [▼] or [▲] button to select Lights.

▶ Press button [OK] .

▶ Use the [▼] or [▲] button to select Intelligent Light System.
If the Intelligent Light System has been switched on, the display will show the [≡D] symbol in yellow on the instrument cluster.

▶ Press button [OK] .

When you switch on the Intelligent Light System function, you will enable the following functions:

- Motorway mode
- Active headlamps
- Cornering light
- Enhanced fog light function

ⓘ If you set the low beam for driving on the right or left, the display will show the Inactive for left-side traffic or Inactive for right-side traffic display message on the Lights submenu instead of Intelligent Light System (⟶ page 177). This display message will appear only if the setting for driving on the right or left is the opposite to your vehicle's national version.

ⓘ You can find further information in "Intelligent Light System" (⟶ page 104).

Adaptive Highbeam Assist

How Adaptive Highbeam Assist works

⚠ **WARNING** Risk of accident despite Adaptive Highbeam Assist

Adaptive Highbeam Assist does not react to:

- road users without lights, e.g. pedestrians
- road users with poor lighting, e.g. cyclists
- road users whose lighting is obstructed, e.g. by a barrier

On very rare occasions, Adaptive Highbeam Assist may fail to recognise other road users with their own lighting, or may recognise them too late.

In these, or in similar situations, the automatic high beam will not be deactivated or will be activated despite the presence of other road users.

▶ Always observe the road and traffic conditions carefully and switch off the high beam in good time.

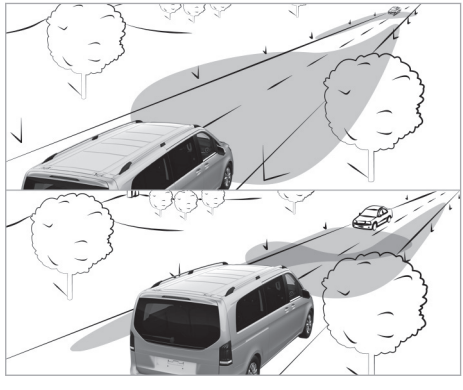

Adaptive Highbeam Assist automatically switches between the following settings:

- Low beam
- High beam

The system detects that vehicle lights are approaching in the opposite direction or driving ahead of the vehicle.

If your speed is greater than 30 km/h and no other road users are detected, high beam will automatically be switched on.

If your speed is greater than 25 km/h, the headlamp range will be controlled automatically depending on the distance from other road users.

High beam will automatically be deactivated in the following cases:

- Your speed is lower than 25 km/h.
- Other road users have been detected.
- The road is sufficiently illuminated.

System limits
Adaptive Highbeam Assist cannot take into account road, weather or traffic conditions.

The detection of obstacles may be restricted if:

- visibility is poor, e.g. in fog, heavy rain or snow.
- the sensors are dirty or obscured.

Adaptive Highbeam Assist is only an aid. You are responsible for adjusting the vehicle's lighting to the prevailing light, visibility and traffic conditions.

The system's optical sensor is located behind the windscreen near the overhead control panel.

Switching Highbeam Assist on/off

Requirements:
- The light switch is in the AUTO position.

▶ **To switch on:** switch on high beam using the combination switch.
When the high beam is switched on automatically in the dark, the indicator lamp will light up on the instrument cluster display.

▶ **To switch off:** switch off high beam using the combination switch.

Adaptive Highbeam Assist Plus

Adaptive Highbeam Assist Plus function

⚠ **WARNING** Risk of accident despite Adaptive Highbeam Assist Plus

Adaptive Highbeam Assist Plus does not react to:

- road users without lights, e.g. pedestrians
- road users with poor lighting, e.g. cyclists
- road users whose lighting is obstructed, e.g. by a barrier

On very rare occasions, Adaptive Highbeam Assist Plus may fail to recognise other road users with their own lighting, or may recognise them too late.

In these, or in similar situations, the automatic high beam will not be deactivated or will be activated despite the presence of other road users.

▶ Always observe the road and traffic conditions carefully and switch off the high beam in good time.

Adaptive Highbeam Assist Plus cannot take into account road, weather or traffic conditions.

Detection may be restricted in the following cases:

- In poor visibility, e.g. fog, heavy rain or snow
- if there is dirt on the sensors or the sensors are obscured

Adaptive Highbeam Assist Plus is only an aid. You are responsible for ensuring correct vehicle lighting in accordance with the prevailing light, visibility and traffic conditions.

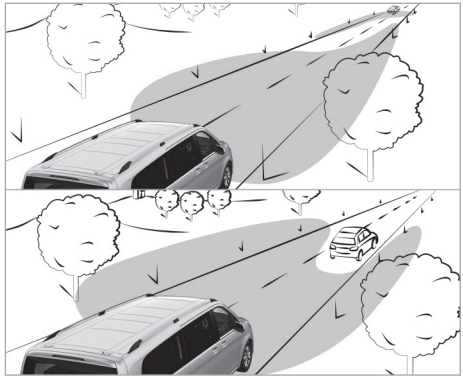

Adaptive Highbeam Assist Plus switches automatically between the following light types:

- Low beam
- Partial high beam
- High beam

Partial high beam uses high beam to shine past other road users rather than dazzling them. The low beam illumination area covers the vehicle in front.

At speeds lower than 25 km/h or if there is insufficient street lighting, Highbeam Assist Plus will perform the following actions:

- Partial high beam and high beam will be automatically deactivated.
- The [≡D] indicator lamp on the instrument cluster will go out. The [≡A] symbol for Highbeam Assist Plus will remain switched on.

At speeds greater than 30 km/h, Highbeam Assist Plus will perform the following actions:

- If no other road users are detected, high beam will be switched on.
- If other road users are detected, partial high beam will be switched on.
- The [≡D] indicator lamp on the instrument cluster will light up.

At speeds greater than 40 km/h, Highbeam Assist Plus will perform the following actions:

- If no other road users are detected and the road is straight, high beam will be switched on.
- If highly reflective signs are detected, high beam will automatically be switched off.
- If other road users are detected, partial high beam will be switched on automatically.
- The [≡D] indicator lamp on the instrument cluster will light up.

The system's optical sensor is located behind the windscreen near the overhead control panel.

Switching Adaptive Highbeam Assist Plus on/off

Requirements:
- The light switch is in the [AUTO] position.

▶ **To switch on:** switch on high beam using the combination switch.
When the high beam is switched on automatically in the dark, the [≡A] indicator lamp will light up on the instrument cluster display.

▶ **To switch off:** switch off high beam using the combination switch.

Setting the exterior lighting switch-off delay time

Requirements:
- The light switch is in the [AUTO] position.

Multimedia system:
→ [⌂] ▸▸ Settings ▸▸ Lights ▸▸ Ext. light. del. sw. off

▶ Set a switch-off delay time.

When the vehicle is switched off, the exterior lighting will be activated for the set time.

Activating and deactivating the surround lighting

Multimedia system:
→ [⌂] ▸▸ Settings ▸▸ Lights ▸▸ Surround lighting

▶ Activate or deactivate the function.

The surround lighting will remain on for 40 seconds after the vehicle is unlocked. When you start the vehicle, the surround lighting will be deactivated and the automatic driving lights activated.

Interior lighting

Adjusting the interior lighting

Front overhead control panel

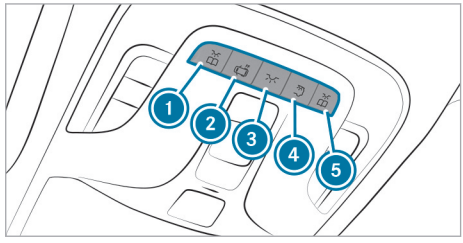

Interior lighting buttons (example: comfort overhead control panel)

1. Front left reading lamp
2. Automatic interior lighting control
3. Front interior lighting
4. Rear or load compartment lighting
5. Front right reading lamp

▶ **To switch on/off:** press corresponding button 1 – 5.

The layout and number of buttons depend on the equipment.

Operating unit in the grab handle

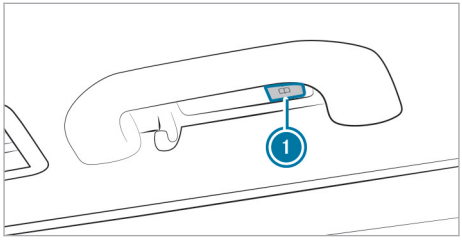

① Rear reading lamp

▶ **To switch on/off:** press button ①.

Adjusting ambient lighting

Multimedia system:

→ ⌂ ▸▸ Settings ▸▸ Lights ▸▸ Ambient lighting

Setting the colour

▶ Select Colour.

▶ Set the required colour.

Adjusting the brightness

▶ Select Brightness.

▶ Adjust the brightness.

Switching the interior lighting switch-off delay time on/off

Multimedia system:

→ ⌂ ▸▸ Settings ▸▸ Lights ▸▸ Int. light. del. sw. off

▶ Switch the switch-off delay time on or off.
If the function is active, the interior lighting will switch on automatically when the vehicle is unlocked or switched off.

Changing bulbs

Instructions for replacing illuminants

⚠ **WARNING** Risk of burns from hot component parts whilst replacing a bulb

Bulbs, lamps and plug connectors can become very hot during operation.

When replacing a bulb, you could burn yourself on these component parts.

▶ Allow the component parts to cool down before replacing the bulbs.

Important safety notes

- Before changing the bulbs, switch off the vehicle's lighting system. This will prevent a short circuit.
- Use only spare bulbs of the same type and with the correct voltage.
- Use bulbs only in enclosed lamps that have been designed for them.
- Do not use any illuminant that has been dropped or has scratches on its glass tube. Otherwise, the illuminant may explode.
- The illuminant may explode under the following conditions:
  - if it is hot and you touch it
  - if you drop it
  - if you scratch it
- Stains on the glass tube will reduce the service life of the illuminant. Do not touch the glass tube with your bare hands. If necessary, clean the glass tube with alcohol or spirits while it is cold and wipe it down with a lint-free cloth.
- Protect light bulbs from humidity and do not bring them into contact with liquids.

Always ensure the bulbs are firmly secured.

Have the following light sources changed at a qualified specialist workshop only:

- Additional turn signal lamps on the outside mirror
- Bulbs in the licence plate lighting

If your vehicle is equipped with LED headlamps, contact a qualified specialist workshop.

Bulbs and lamps are major elements in vehicle safety. Therefore, ensure that they are always working. Have the headlamp setting checked regularly.

If the new light source also does not light up, consult a qualified specialist workshop.

Replacing front light bulbs (vehicles with halogen headlamps)

Overview of illuminant types

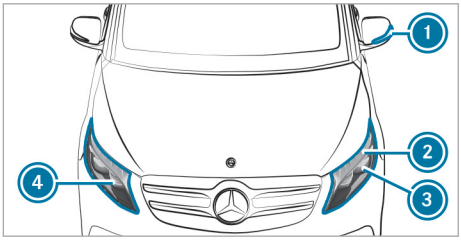

1. Additional turn signal lamp on the outside mirror: LED
2. Turn signal light: PY 21 W
3. Low beam: H7 55 W
4. High beam/standing/parking lights/daytime running lights: H15 55 W/15 W

Replacing illuminants in the headlamp

Requirements:

- The lighting system is switched off.
- The appropriate front wheel is turned inwards.
- **Low beam:** you require a H7 55 W illuminant.
- **Turn signal light:** you require a PY 21 W illuminant.
- **High beam / standing/parking lights / daytime running lights:** you require a H15 55 W/15 W illuminant.

Fitting/removing the cover in the front wheel arch

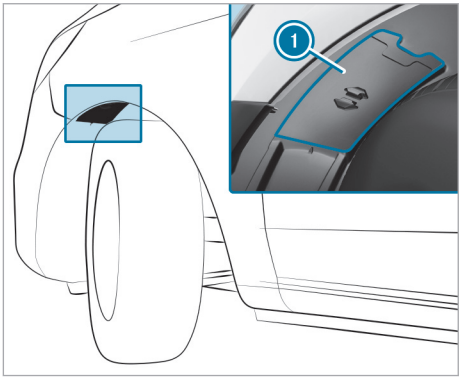

▶ **To remove:** grip the centre of cover 1, slide it upwards and pull it out.
The cover will hang downwards on the strap.

▶ **To fit:** insert cover 1 at the top and slide it downwards until it engages.

Low beam

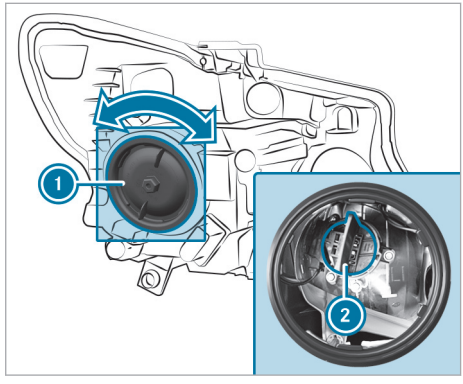

▶ Remove the cover in the front wheel arch.
▶ Turn housing cover 1 anti-clockwise and remove it.
▶ Turn socket 2 for low beam anti-clockwise and pull it out.
▶ Pull the bulb out of socket 2.
▶ Insert the new bulb into socket 2.
▶ Insert socket 2 and turn it clockwise to tighten it.
▶ Press on housing cover 1 and turn it clockwise to tighten it.
▶ Replace the cover in the front wheel arch.

High beam, standing/parking lights and daytime running lights

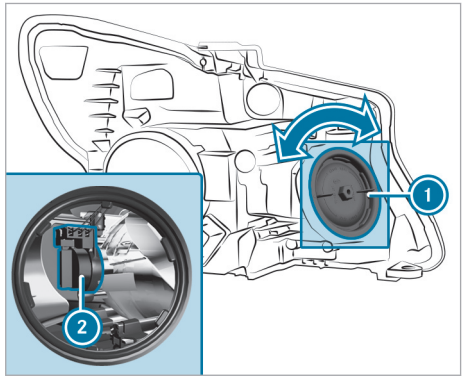

▶ Open the bonnet (→ page 214).

- Turn housing cover ① anti-clockwise and remove it.
- Pull out the bulb with socket ②.
- Insert the new bulb with socket ② and engage it as far as it will go.
- Press on housing cover ① and turn it clockwise to tighten it.
- Close the bonnet.

Turn signal light

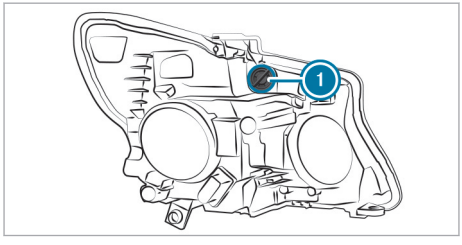

- Open the bonnet (→ page 214).
- Turn socket ① anti-clockwise and pull it out.
- Pull the bulb out of socket ①.
- Insert the new bulb into socket ①.
- Insert socket ① and turn it clockwise until it engages.
- Close the bonnet.

Replacing rear bulbs

Overview of rear illuminant types

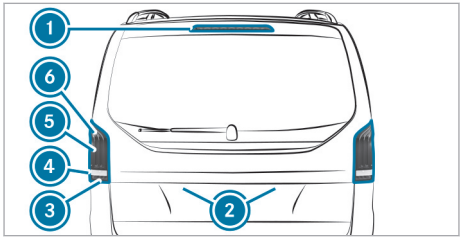

Vehicles with standard tail lamp

① Third brake light: LED
② Licence plate lighting: LED
③ Rear fog light (driver's side): P 21 W
④ Reversing light: P 21 W
⑤ Brake light, tail light/parking lights: P 21 W
⑥ Turn signal light: P 21 W

Vehicles with LED tail lamps

① Third brake light: LED
② Licence plate lighting: LED
③ Rear fog light (driver's side): LED
④ Reversing light: W 16 W
⑤ Brake light, tail light/parking lights: LED
⑥ Turn signal light: LED

Replacing illuminants in the tail lamp

Requirements:

- The lighting system is switched off.
- **Standard tail lamp:** you require a P 21 W illuminant.
- **LED tail lamp:** you require a W 16 W illuminant.

Removing the tail lamp

! **NOTE** Damage to the paintwork during tail lamp removal

The paintwork may be damaged when the tail lamps are removed. The tail lamp may, for example, scratch the paintwork when it is removed.

- Remove the tail lamps carefully.
- Mercedes-Benz recommends having the tail lamp light sources replaced at a qualified specialist workshop.

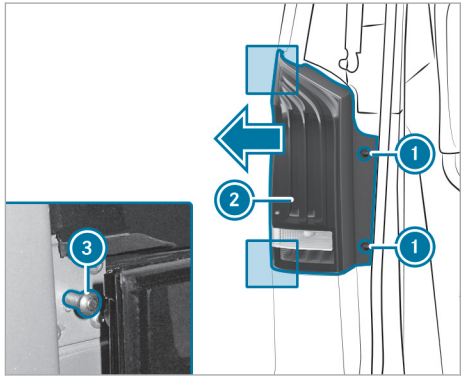

Please note that you can change the bulb of the reversing light only in the case of an LED tail lamp.

- Open the tailgate.

ⓘ You will find a screwdriver in the vehicle tool kit (→ page 231).

- Unscrew two side screws ①.
- Push tail lamp ② outwards against bolts ③ as far as it will go.

- Press tail lamp ② off outwards and away from bolts ③.
- Pull the connector off the bulb mount of tail lamp ②.

Installing the tail lamp

- Push the connector into the bulb mount of tail lamp ②.
- Push tail lamp ② onto bolts ③ from the side and press it against the vehicle.
- Tighten two side screws ①.

Standard tail lamp

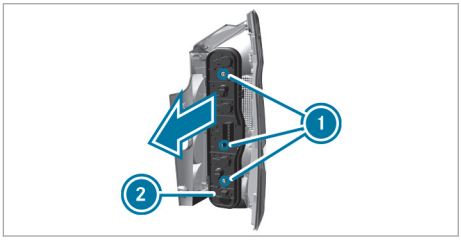

- Unscrew three screws ① and remove bulb mount ② from the tail lamp.

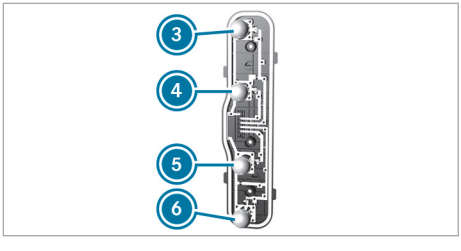

Bulb mount

③ Turn signal light
④ Brake light, tail light, parking light
⑤ Reversing light
⑥ Rear fog light (only on the driver's side)

- Remove the tail lamp.
- Gently turn the bulb anti-clockwise and take it out of the socket.
- Push the new bulb into the socket and turn it clockwise to screw it in.
- Insert bulb mount ② in the tail lamp and tighten all three screws ①.
- Install the tail lamp.

LED tail lamp

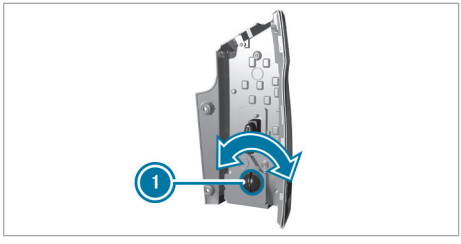

- Remove the tail lamp.
- Unscrew housing cover ① by turning it anti-clockwise.
- Turn the socket anti-clockwise and pull it out.
- Pull the bulb out of the socket.
- Insert the new bulb in the socket.
- Insert the socket and rotate it clockwise to tighten it.
- Press on housing cover ① and rotate it clockwise to tighten it.
- Install the tail lamp.

Replacing interior light bulbs

Replacing illuminants in the interior

Requirements:

- The interior lighting has been switched off.
- **Rear and load compartment lamp:** you require a T10 6W xenon illuminant.
- **Interior and surround lighting:** you require a W 5 W illuminant.
- **Signal and ambient lamp in the tailgate:** you require a W 5 W illuminant.

Rear and load compartment lamps

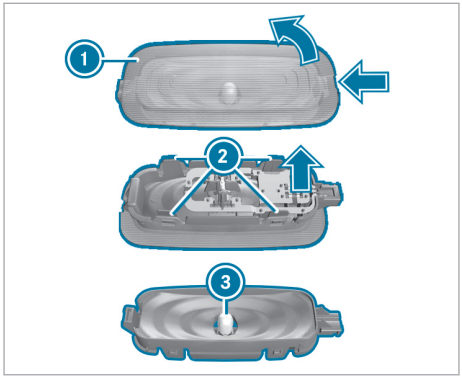

- Push in the catch spring of lens 1 with a suitable object, e.g. a screwdriver, and then prise off the lens with the lamp housing.
- Push the lugs of socket 2 inwards.
- Remove illuminant 3 from the lamp housing.
- Insert the new illuminant.
- Position the lens on the lamp housing and engage it.
- Align the lens with the lamp housing and engage it.

Additional interior and surround lighting

Depending on the equipment, replacing the illuminants as described here applies to the following lamps:

- The sun visor mirror lamp
- The ambient lamp at the bottom of the front door
- The ambient lamp on the inside of the tailgate

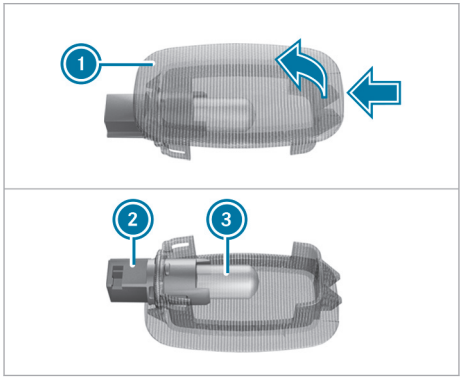

- Push in the catch spring of lamp housing 1 with a suitable object, e.g. a screwdriver, and prise off lamp housing 1.
- Turn socket 2 anti-clockwise and pull it out of lamp housing 1.
- Pull bulb 3 out of socket 2.
- Push new bulb 3 into socket 2.
- Screw socket 2 into lamp housing 1 by turning it clockwise.
- Place lamp housing 1 in position on the left and engage it.

Signal and ambient lamp in the tailgate

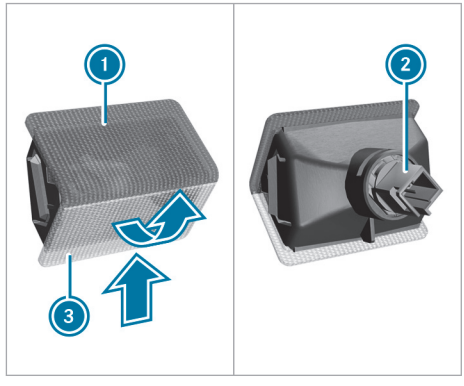

- Push in the catch spring of the lamp housing on the side of transparent lens 3 with a suitable object, e.g. a screwdriver, and prise off the lamp housing.
- Turn socket 2 anti-clockwise and pull it out of the lamp housing.
- Pull the bulb out of socket 2.
- Push the new bulb into socket 2.
- Screw socket 2 into the lamp housing by turning it clockwise.
- Place the lamp housing in position at the side of red lens 1 and engage it.

Windscreen wipers

Switching the windscreen wipers on and off

Requirements:
- The power supply is switched on.

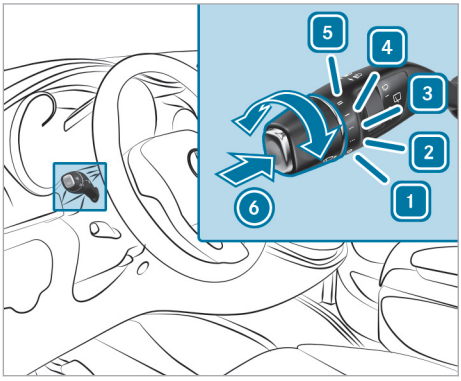

1 [0] Windscreen wipers off
2 [•••] Intermittent wiping, low (low rain sensor sensitivity)
3 [••••] Intermittent wiping, high (high rain sensor sensitivity)
4 [—] Continuous wiping, slow
5 [═] Continuous wiping, fast

▶ Turn the combination switch to the corresponding position 1 – 5.

▶ **Single wipe:** press the button on the combination switch in the direction of arrow 6 as far as the first point of resistance.

▶ **Washing:** press the button on the combination switch in the direction of arrow 6 as far as the second point of resistance.

Switching the rear window wiper on and off

Requirements:
- The power supply is switched on.

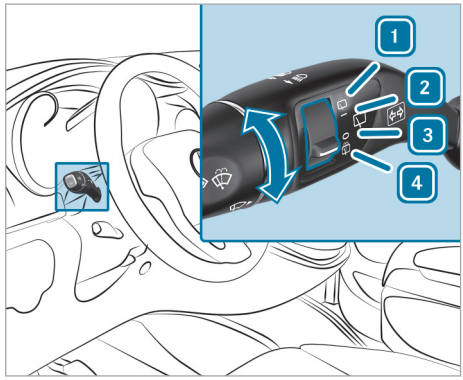

1 [⊡] Wiping with washer fluid
2 [—] Intermittent wiping
3 [0] Rear window wiper off
4 [⊡] Wiping with washer fluid

▶ Move the [⊡] switch to the corresponding position.
When the rear window wiper is switched on, the [⊡] symbol will appear on the instrument cluster display.

▶ **Wiping with washer fluid:** press and hold the [⊡] switch beyond the current position up to the 1 or 4 limit.

Replacing the windscreen wiper blades

⚠ **WARNING** Risk of becoming trapped if the windscreen wipers are switched on while wiper blades are being replaced

If the windscreen wipers begin to move while you are changing the wiper blades, you can be trapped by the wiper arm.

▶ Always switch off the windscreen wipers and vehicle before changing the wiper blades.

! **NOTE** Damage to the windscreen or rear window when you replace the wiper blade

If a wiper arm is folded back onto the windscreen or rear window and no wiper blade is fitted, the window may be damaged by the force of the impact.

▶ Never fold a wiper arm back onto the windscreen or rear window without a wiper blade fitted. Hold the wiper arm firmly when a wiper blade is being replaced.

! **NOTE** Damage to bonnet or windscreen wipers when opening the bonnet

If the windscreen wipers have been folded back from the windscreen when the bonnet is opened, the windscreen wipers or the bonnet may be damaged.

▶ Ensure that the windscreen wipers have not been folded back from the windscreen.

Removing the wiper blades

▶ Fold the wiper arms away from the windscreen.

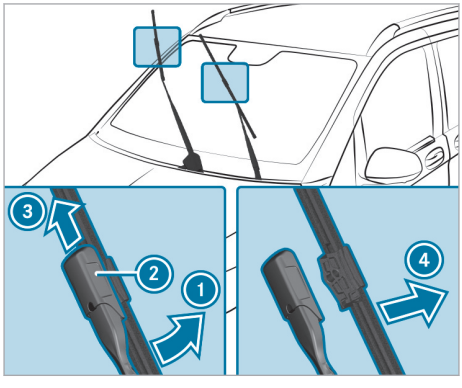

▶ Hold the wiper arm with one hand. With the other hand, turn the wiper blade in the direction of arrow ① away from the wiper arm as far as it will go.

▶ Slide catch ② in the direction of arrow ③ until it engages in the removal position.

▶ Remove wiper blade from the wiper arm in the direction of arrow ④.

Fitting the wiper blades

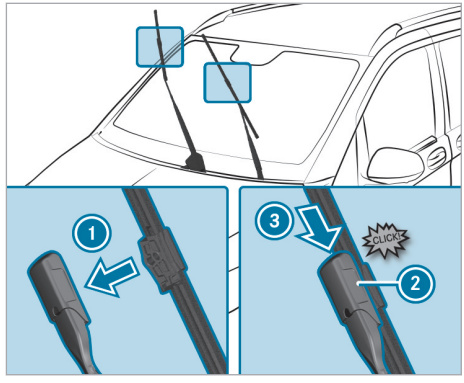

▶ Insert the new wiper blade into the wiper arm in the direction of arrow ①.

▶ Slide catch ② in the direction of arrow ③ until it engages in the locking position.

▶ Make sure that the wiper blade is seated correctly.

▶ Fold the wiper arms back onto the windscreen.

Maintenance display

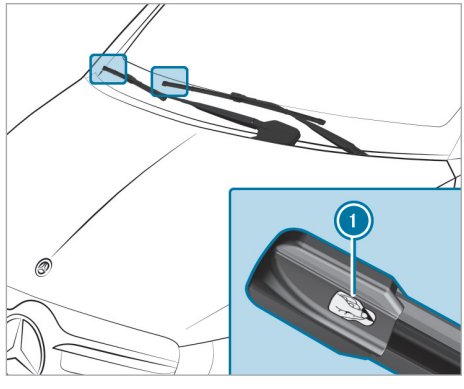

▶ Remove protective film ① from the maintenance displays on the tips of the newly fitted wiper blades.

If the colour of the maintenance display changes from black to yellow, the wiper blades should be replaced.

ⓘ The time until the colour changes varies depending on the usage conditions.

Replacing rear window wiper blades

Tailgate

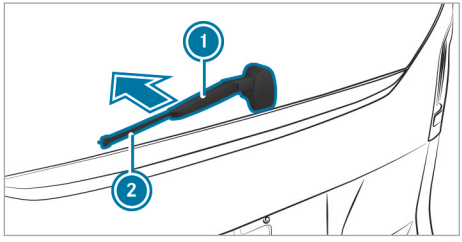

- Fold wiper arm ① away from the rear window until it engages in the replacement position.
- Keep hold of wiper arm ① and pull wiper blade ② off the wiper arm in the direction of the arrow.
- Place new wiper blade ② on wiper arm ①.
- Keep hold of wiper arm ① and push wiper blade ② in the opposite direction to the arrow until it engages.
- Make sure that wiper blade ② is seated correctly.
- Fold wiper arm ① back onto the rear window.

Mirrors

Operating the outside mirrors

WARNING Risk of accident due to adjusting the vehicle settings while the vehicle is in motion

You could lose control of the vehicle in the following situations in particular:

- if you adjust the driver's seat, the head restraint, the steering wheel or the mirror while the vehicle is in motion
- if you fasten your seat belt while the vehicle is in motion

- Before starting the vehicle: in particular, adjust the driver's seat, head restraint, steering wheel and mirror, and fasten your seat belt.

WARNING Risk of accident due to misjudgement of distance when using the outside mirror

The outside mirrors reflect objects on a smaller scale. The objects in view are in fact closer than they appear.

- Therefore, always look over your shoulder in order to ensure that you are aware of the actual distance between you and the road users driving behind you.

Adjusting the outside mirrors electrically

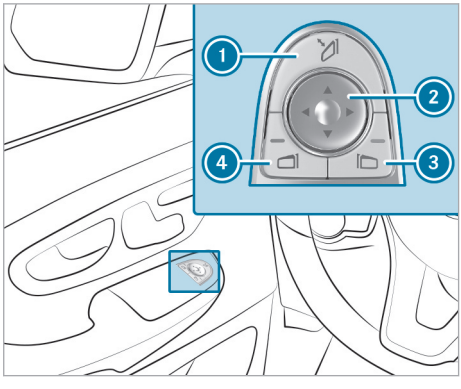

- Switch on the power supply or the vehicle.
- Press button ③ or ④ to select the outside mirror to be adjusted.
- Set the position of the mirror surface using button ②.

Folding the electric outside mirrors in/out

NOTE Damage to the electric outside mirrors due to manual or forced folding in.

If the electric outside mirrors are folded in or out manually, the outside mirrors may be damaged and will not engage properly.

If the outside mirrors are not folded in at the car wash, the wash brushes may forcibly fold in and damage the outside mirrors.

- Fold and unfold the outside mirrors electrically only.
- Before washing the vehicle in an automatic car wash, fold in the outside mirrors.

- Switch on the power supply or the vehicle.
- Briefly press button ①.

You will no longer be able to fold in the outside mirrors once you reach a speed greater than 47 km/h.

Engaging the outside mirrors

If an outside mirror has been forcibly disengaged forwards or backwards, proceed as follows.

▶ Press and hold button ① until you hear a click followed by the mirror audibly engaging in position.
The mirror housing will now be engaged and you will be able to adjust the outside mirrors as normal.

Resetting the outside mirrors

ⓘ If the battery has been disconnected or completely discharged, the outside mirrors must be reset. Only then will the automatic mirror folding function work properly.

▶ Switch on the power supply or the vehicle.

▶ Briefly press button ①.

Heating the outside mirrors

Vehicles without a rear window heater: at temperatures below 15°C, the mirror heater will automatically switch on permanently once the vehicle has been started.

Vehicles with a rear window heater: at temperatures below 15°C, the mirror heater will automatically switch on for ten minutes once the vehicle has been started. The mirror heater can also be switched on together with the rear window heater.

▶ Switch on the vehicle.

▶ Press the REAR button on the climate control operating unit.
The indicator lamp on the REAR button will light up and the mirror heater will be switched on together with the rear window heater.

Using the digital rear-view mirror

The vehicle may be fitted with a digital inside rear-view mirror. This uses a camera in the rear window and a display integrated in the mirror to provide a better view to the rear. The rear-view mirror can be used either as a standard rear-view mirror or as a display.

To prevent glare from the digital rear-view mirror, first set the digital rear-view mirror as the standard rear-view mirror.

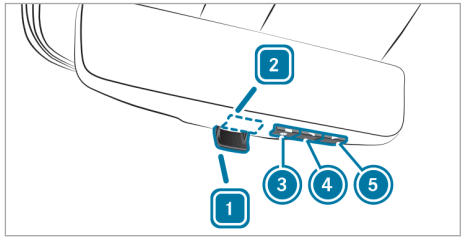

Certain types of sunlight, e.g. sun low on the horizon or light from another intense light source, can reduce the display's contrast and cause it to become too bright. In such situations, objects on the display may be obscured or difficult to see. In these cases, be particularly careful and adapt your driving style accordingly.

Drivers must always wear the necessary personal visual aids required for them to drive a vehicle. Drivers with presbyopia (age-related long-sightedness) should, if necessary, wear visual aids with multifocal lenses to be sufficiently able to see traffic including via the displays.

ⓘ If the camera in the rear window is dirty, operate the rear window wiper with washer fluid (⟶ page 113) or clean the rear window manually. Observe the notes on cleaning the digital rear-view mirror (⟶ page 220).

▶ **To use the standard rear-view mirror:** move the switch to position 1.

▶ **To use the display:** move the switch to position 2.

Adjusting the display brightness

ⓘ The digital rear-view mirror is equipped with light sensors on the front and back and automatically adjusts the brightness of the display to the lighting conditions. Do not cover the light sensors, e.g. with a sticker.

▶ Press menu button ③ once.

▶ Press button ④ to reduce the display brightness.

or

▶ Press button ⑤ to increase the display brightness.

Adjusting the angle of the camera

▶ Press menu button ③ twice.

▶ Press button ④ to move the angle downwards.

or

▶ Press button ⑤ to move the angle upwards.

Error mode of the digital rear-view mirror

If a system error occurs, e.g. if the camera fails, a crossed-out camera will appear at the top left of the display and no camera image will be visible in the mirror.

▶ Switch to the standard rear-view mirror if there is a system error.

Automatic anti-dazzle mirrors function

⚠ **WARNING** Risk of acid burns and poisoning due to the anti-dazzle mirror electrolyte

Electrolyte may escape if the glass in an automatic anti-dazzle mirror breaks.

The electrolyte is hazardous to health and causes irritation. It must not come into contact with your skin, eyes, respiratory organs or clothing or be swallowed.

▶ If you come into contact with electrolyte, observe the following:

- Immediately rinse the electrolyte from your skin with water and seek medical attention.
- If electrolyte comes into contact with your eyes, immediately rinse them thoroughly with clean water and seek medical attention.
- If the electrolyte is swallowed, immediately rinse your mouth out thoroughly. Do not induce vomiting. Seek medical attention immediately.
- Immediately change out of clothing which has been contaminated with electrolyte.
- If an allergic reaction occurs, seek medical attention immediately.

The inside rear-view mirror and the outside mirror on the driver's side will automatically go into anti-dazzle mode if light from a headlamp hits the sensor on the inside rear-view mirror.

System limits

The system will not go into anti-dazzle mode if:

- the vehicle is switched off
- reverse gear is engaged.
- the interior lighting is switched on.
- The incident light from the headlamps is blocked by objects in the load compartment, for example, and does not hit the sensor on the inside rear-view mirror.

Operating sun visors

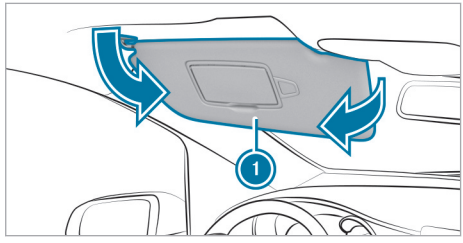

▶ **Glare from front:** Fold sun visor (1) downwards.

▶ **Glare from the side:** Swivel sun visor (1) to the side.

Overview of climate control systems

TEMPMATIC overview

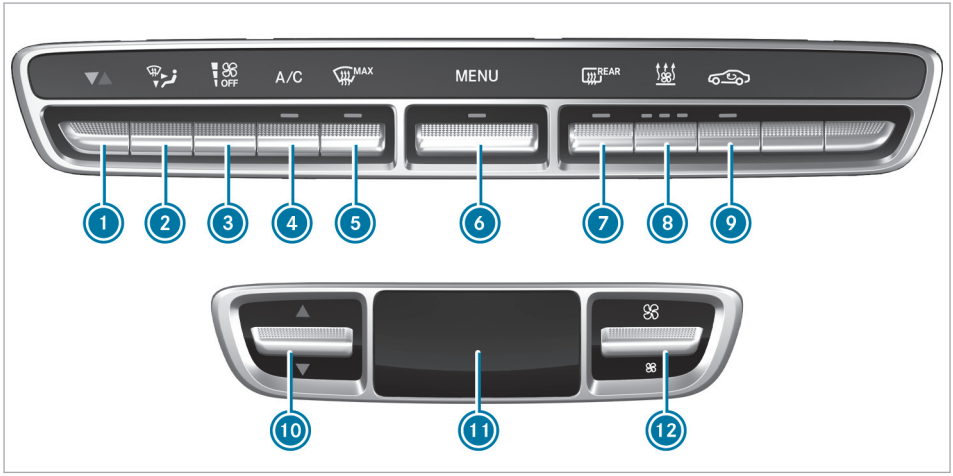

Front operating unit:

1. ▼▲ Sets the temperature (→ page 121)
2. Sets the air distribution (→ page 121)
3. Sets the airflow (→ page 121)
4. A/C Switches cooling with air dehumidification on/off (→ page 120)
5. MAX Demists the windscreen (→ page 122)
6. MENU Calls up the air conditioning menu of the multimedia system
7. REAR Switches the rear window heater and mirror heater on/off (→ page 123)
8. Switches pre-entry climate control on and off (→ page 126)
   Switches MaxComfort mode on and off (→ page 119)
9. Switches air-recirculation mode on/off manually (→ page 122)

Rear operating unit:

10. ▼▲ Sets the temperature (→ page 121)
11. Display
12. Sets the airflow (→ page 121)

THERMOTRONIC overview

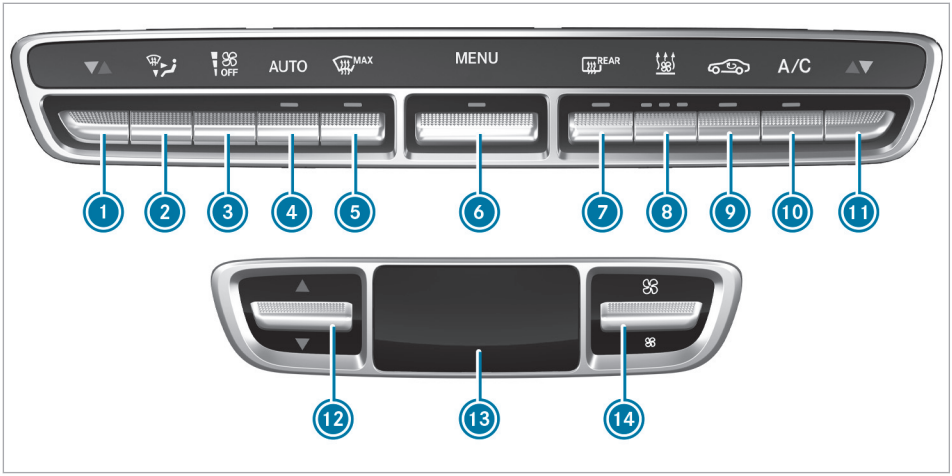

Front operating unit:

1. ▼▲ Sets the temperature on the left (→ page 121)
2. Sets the air distribution (→ page 121)
3. Sets the airflow (→ page 121)
4. AUTO Automatically regulates climate control (→ page 121)
5. MAX Demists the windscreen (→ page 122)
6. MENU Calls up the air conditioning menu of the multimedia system
7. REAR Switches the rear window heater and mirror heater on/off (→ page 123)
8. Pre-entry climate control (→ page 126) Activates/deactivates MaxComfort mode (→ page 119)
9. Switches air-recirculation mode on/off manually (→ page 122)
10. A/C Switches cooling with air dehumidification on/off (→ page 120)
11. ▼▲ Sets the temperature on the right (→ page 121)

Rear operating unit:

12. ▼▲ Sets the temperature (→ page 121)
13. Display
14. Sets the airflow (→ page 121)

Operating climate control systems

Notes on energy-saving air-conditioning

Using the heating and climate control functions has a direct effect on the vehicle's range. For this reason, depending on the selected drive program, (→ page 134) the heating/air-conditioning output will automatically be reduced.

Drive program	Vehicle characteristics
C (Comfort)	Normal heating and air-conditioning output
E (Eco)	Slightly reduced heating and air-conditioning output
E + (Eco Plus)	Heavily reduced heating and air-conditioning output
S (Sport)	Normal heating and air-conditioning output
↑ (Lift)	Normal heating and air-conditioning output
Depending on the vehicle's equipment, you can use MaxComfort mode to set an increased heating and air-conditioning output.	

ⓘ To cool the high-voltage battery in very high outside temperatures, the cooling of the vehicle interior can be automatically reduced or switched off for a short time.

A reduction in the heating/air-conditioning output may mean that it will take longer than usual to reach the desired vehicle interior temperature or that it cannot be reached at all.

MaxComfort mode

Depending on its equipment, your vehicle may have a MaxComfort mode.

When the vehicle is switched on, you can activate MaxComfort in all drive programs by pressing the button on the air-conditioning control panel. The maximum output of the heating/climate control system will be activated in this mode. This makes it possible to heat the vehicle more quickly, but can have a negative impact on range. The function is switched on when the indicator lamp on the button is lit up.

Further information

In drive program E or E +, the best heating output will be achieved with a low blower setting (level 1 to a maximum of 3).

If the windows are on the verge of misting up, the blower setting should be increased, and a drive program with a higher heating/air-conditioning output selected if need be. If necessary, switch on the "Demist windscreen" function (→ page 122).

Moreover, comply with the following air-conditioning instructions to minimise energy consumption:

- Select as low a blower setting as possible.
- Use the function for demisting the windscreen only briefly until the misted-up windscreen is clear again.
- Ventilate the vehicle for a short time in warm weather. To achieve quicker cooling, briefly switch the climate control to air-recirculation mode. This will accelerate the cooling process and the desired vehicle interior temperature will be reached more quickly.
- Vehicles with seat heating: using the seat heating in conjunction with a medium vehicle interior temperature will result in lower fuel consumption than selecting a high vehicle interior temperature.

Switching the climate control system on/off

▶ Switch on the vehicle.

▶ **To switch on:** press the top or bottom section of the MENU rocker switch.
The multimedia system air-conditioning menu will open.

or

▶ Set the airflow to level 1 or higher using the rocker switch.

▶ **To switch off:** press the top or bottom section of the MENU rocker switch.

or

▶ Set the airflow to level 0 using the rocker switch.

ⓘ When climate control is switched off, "OFF" will appear on the display of the rear operating unit.

ⓘ When the vehicle is started, the climate control settings most recently selected will be adopted automatically.
Vehicles with rear climate control: the status of the rear climate control after the vehicle is started depends on the zone selected on the Pre-entry climate ctrl menu (→ page 125).

Switching the A/C function on/off

Requirements:

- The climate control system has been switched on (→ page 120).
- The vehicle has been started.

When the "Cooling with air dehumidification" function is switched on, the air inside the vehicle is cooled and dehumidified according to the temperature selected.

The function can be activated or deactivated only in the climate control menu and not in the climate control menu for rear-compartment air conditioning (second menu level).

▶ Set the airflow to level 1 or higher using the rocker switch.

▶ Press the top or bottom section of the A/C rocker switch.
When the indicator lamp above the A/C rocker switch lights up, the "Cooling with air dehumidification" function is switched on.

or

▶ Switch the function on and off via the air conditioning menu of the multimedia system.

When the indicator lamp above the A/C rocker switch flashes three times, the function is switched off due to a defect. Have the climate control system checked at a qualified specialist workshop.

ⓘ Switch off the A/C function only briefly. Otherwise, the windows could mist up more quickly.

ⓘ Condensation may leak from the underside of the vehicle in cooling mode. This is not a sign of a defect.

Automatically regulating climate control

Requirements:
- The climate control system has been switched on (→ page 120).

THERMOTRONIC automatic climate control
When THERMOTRONIC automatic climate control is in automatic mode, the set temperature will automatically be kept constant. The system automatically regulates the temperature of the dispensed air, the airflow and the air distribution.

Automatic mode can be activated or deactivated only in the climate control menu and not in the climate control menu for rear-compartment air conditioning (second menu level).

▶ **To switch automatic mode on/off:** press the top or bottom section of the AUTO rocker switch.
When the indicator lamp above the AUTO rocker switch lights up, automatic mode is switched on.

In automatic mode, if you adjust the airflow or air distribution manually, the indicator lamp above the AUTO rocker switch will go out. The function that has not been changed manually, however, will continue to be regulated automatically. When the manually changed function switches back to automatic mode, the indicator lamp above the AUTO rocker switch will light up again.

Information on the air distribution settings

TEMPMATIC air-conditioning system and THERMOTRONIC automatic climate control

- Directs air to the demister vents
- Directs air to the demister, centre and side air vents
- Directs air to the demister, centre, side and footwell vents
- Directs air to the demister and footwell vents
- Directs air to the centre and side air vents
- Directs air to the centre, side and footwell vents
- Directs air to the footwell vents
- Controls air distribution automatically

Setting the air distribution

Requirements:
- The climate control system is switched on.

▶ Press the top or bottom section of the rocker switch.
The various air distribution settings appear in the air conditioning menu of the multimedia system.

▶ Press the rocker switch up or down until the desired setting is reached.

Vehicles with rear climate control
When the rear air conditioning system is switched on, the air distribution setting on the control panel also applies to rear climate control.

This also applies to the automatic mode of THERMOTRONIC automatic climate control. The air is then automatically directed to the footwell and/or the headroom of the rear compartment.

Setting the airflow

Requirements:
- The climate control system is switched on.

▶ **To increase or decrease:** press the top or bottom section of the rocker switch.

Vehicles with rear climate control: use the air conditioning menu of the multimedia system or the rear control panel to set the airflow for the rear compartment.

Setting the temperature

Requirements:
- The climate control system is switched on.

▶ **To increase or decrease:** press the top or bottom section of the ▼▲ rocker switch.

Vehicles with rear climate control: use the air conditioning menu of the multimedia system or the rear operating unit to set the temperature for the rear compartment.

Switching the synchronisation function on/off

Requirements:
- The climate control system has been switched on (→ page 120).

The temperature can be set centrally using the synchronisation function. The temperature setting

for the driver's side will then be adopted for the front passenger side and, in vehicles with rear climate control, the rear compartment as well.

▶ Switch the "Synchronisation" function on and off via the air conditioning menu of the multimedia system.

The synchronisation function will be switched off if the settings for the front passenger side or rear compartment are changed.

Demisting the windscreen

You can use this function to defrost and demist the windscreen and the front side windows from the inside.

If the "Demist windscreen" function has been switched on, any reduction in heating and air conditioning power will automatically be deactivated.

Switch off the "Demist windscreen" function as soon as the windscreen is clear.

ⓘ Vehicles with THERMOTRONIC: if the vehicle detects mist on the windows, the function will automatically be switched on.

▶ Switch on climate control (→ page 120).

▶ **To switch on/off:** push the top or bottom section of the MAX rocker switch on the front control panel.
If the indicator lamp above the MAX rocker switch lights up, the "Demist windscreen" function has been switched on. The current air-conditioning settings will be deactivated.

The temperature, airflow and air distribution will be regulated automatically to optimise the demisting effect. Air-recirculation mode is deactivated.

When you enable automatic mode, the "Demist windscreen" function will switch off automatically.

When you switch off the "Demist windscreen" function, the previous settings for automatic climate control will be applied again.

Note the following exceptions:

- Air-recirculation mode will remain switched off.
- If the A/C function has been automatically activated, it will remain active.

Depending on operation, you can demist and dry the windscreen more quickly with the following settings: Here too, select the settings only for as long as it takes for the windscreen and front side windows to be clear.

▶ Select the drive program C (→ page 134).

or

▶ Activate MaxComfort mode (→ page 119).
▶ Switch off the rear air conditioning system (→ page 120).
▶ Select the position for air distribution (→ page 121).
▶ Increase the temperature on the left and right to the maximum (→ page 121).
▶ Increase the airflow to the maximum (→ page 121).
▶ Close the side air vents (→ page 123).

Switching air-recirculation mode on/off

When air-recirculation mode is switched on, the windows may mist up more quickly. Switch on air-recirculation mode only briefly.

▶ Press the top or bottom section of the rocker switch.
When the indicator lamp above the rocker switch lights up, air-recirculation mode is switched on.

Air-recirculation mode will automatically switch on in the following cases:

- in high outside temperatures
- while the vehicle is driving through a tunnel (vehicles with THERMOTRONIC automatic climate control and navigation only)

After approximately 30 minutes, outside air will automatically be introduced again.

Air-recirculation mode will automatically switch off in the following cases:

- after approximately five minutes at outside temperatures below approximately 7°C
- after approximately five minutes when the "Cooling with air dehumidification" function is deactivated
- after approximately 30 minutes at outside temperatures above approximately 7°C and when the "Cooling with air dehumidification" function is switched on.

Convenience opening/closing

WARNING Risk of entrapment due to not paying attention during convenience closing

When the convenience closing feature is operating, parts of the body could become trapped in the closing area of the side windows.

- When the convenience closing feature is operating, monitor the entire closing process and make sure that no body parts are in the closing area.

WARNING Risk of entrapment when opening a side window

When opening a side window, parts of the body could be drawn in or become trapped between the side window and window frame.

- When opening, make sure that nobody is touching the side window.
- Release the button immediately if somebody becomes trapped.

- **Convenience closing with the air-recirculation rocker switch:** press and hold the rocker switch up or down until the side windows automatically close.
  The indicator lamp over the rocker switch lights up. The original position of the side windows is stored. Air-recirculation mode is activated.

  If you open the side windows manually after using convenience closing, they first open automatically to the original position before convenience closing.
- **To interrupt convenience closing:** release the rocker switch.
- **Convenience opening with the air-recirculation rocker switch:** press and hold the rocker switch up or down until the side windows automatically open.
  The indicator lamp over the rocker switch goes out. Air-recirculation mode is deactivated.
- **To interrupt convenience opening:** release the rocker switch.

Switching the rear window heater on/off

The rear window heater consumes a lot of electricity. You should therefore switch off the rear window heater as soon as the rear window is clear.

- Switch on the vehicle.
- Press the top or bottom of the REAR rocker switch.
  If the indicator lamp above the REAR rocker switch lights up, the rear window heater is switched on.

The rear window heater will switch off automatically after a few minutes.

Operating air vents

Adjusting the air vents

WARNING Risk of burns or frostbite due to being too close to the air vents

Very hot or very cold air can flow from the air vents.

- Make sure that all vehicle occupants always maintain a sufficient distance from the air vents.
- If necessary, direct the airflow to another area of the vehicle interior.

Adjusting the centre air vents

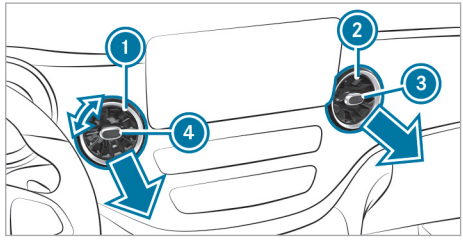

- **To open/close:** turn controller 3 or 4 to the left or right as far as it will go.
- **To adjust the airflow direction:** hold centre air vent 1 or 2 by controller 3 or 4 and move it up or down or to the left or right.

Adjusting the side air vents:

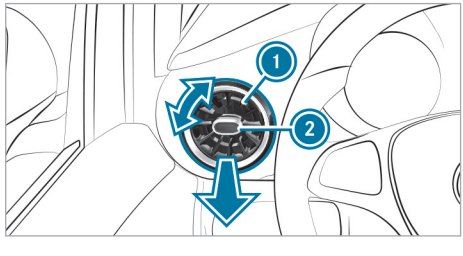

- **To open/close:** turn controller ② clockwise or anti-clockwise as far as it will go.
- **To adjust the airflow direction:** hold side air vent ① by controller ② and move it up or down or to the left or right.

Opening/closing the rear air vents:

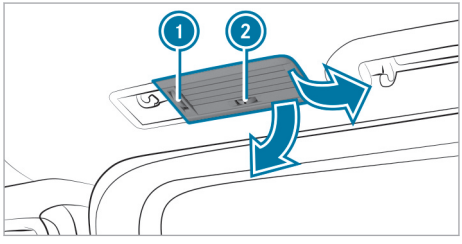

① Adjustment wheel for vertically adjusting and regulating airflow
② Adjustment wheel for horizontally adjusting airflow

The air vents can be adjusted only on vehicles with rear-compartment air conditioning.

- **To open:** turn adjustment wheel ① of the rear air vent to the centre position.
- **To close:** turn adjustment wheel ① to the upper or lower end position.

Notes on pre-entry climate control

WARNING Risk of fatal injury due to exposure to extreme heat or cold in the vehicle

If persons, particularly children, are subjected to prolonged exposure to intense heat or cold, there is a risk of severe injury or even death.

- Never leave persons, particularly children, unattended in the vehicle.

The vehicle interior can be air conditioned when the vehicle is parked.

Depending on the vehicle's equipment, you have the following options for pre-entry climate control:

- Pre-entry climate control using the key (→ page 124)
- Pre-entry climate control for a set departure time (→ page 125)
- Pre-entry climate control using the button (→ page 126)

The specified temperature for the pre-entry climate control of the vehicle interior corresponds to the temperature most recently set on the climate control operating unit (→ page 121).

If you use the pre-entry climate control during the charging process in very high outside temperatures (mode 4), observe the following:

- The cooling output will be reduced depending on the temperature and state of charge of the high-voltage battery, which may extend the cooling process of the vehicle interior.
- To cool the high-voltage battery, the cooling of the vehicle interior can be automatically switched off for a short time.

ⓘ Select the lowest possible blower setting and switch off the rear climate control system, particularly during the charging process (mode 4) and when outside temperatures are very high. This will reduce the cooling output and ensures the climate control of the vehicle interior.

Using pre-entry climate control via the key

Setting pre-entry climate control via the key

- Call up the air-conditioning menu in the multimedia system.
- Select Pre-entry climate ctrl.
- Select ⚙.
- Select the Pre-entry climate control via key: function.

Activating/deactivating pre-entry climate control via the key

Requirements:

- The high-voltage battery is charged sufficiently.
- The function has been activated via the air-conditioning menu in the multimedia system.

- **To activate:** unlock the vehicle.
  The climate control functions will be activated for up to five minutes for pre-heating and pre-cooling.

  During pre-cooling, the following functions will be activated as needed:
  - Automatic climate control
  - Blower
  - Seat ventilation

During pre-heating, the following functions will be activated as needed:

- Automatic climate control
- Blower
- Seat heating
- Rear window heater

Pre-entry climate control via the key cannot be activated more than three times when the vehicle is switched off.

▶ **To switch off:** press the top or bottom section of the [ ] rocker switch.

The following functions will also remain active once the vehicle has been started:

- Seat heating
- Seat ventilation

Using pre-entry climate control for departure time

When the vehicle is connected to power supply equipment, priority will be given to charging the high-voltage battery to a specified minimum state of charge.

The time for which pre-entry climate control will run may be reduced under the following conditions:

- The vehicle is not connected to power supply equipment.
- The high-voltage battery is not fully charged.

With active pre-entry climate control, the state of charge of the high-voltage battery may be reduced, even if the charging cable connector is inserted.

▶ Call up the air-conditioning menu in the multimedia system.

▶ Select Pre-entry climate ctrl.

Setting a single departure time

▶ Select Once.

▶ Set a departure time.

Changing the active departure time

▶ Select the pen icon next to the displayed departure time.

▶ Set a departure time.

Selecting the zone

▶ Select [ ].

▶ Select Driver's seat only.
If the Driver's seat only setting is deactivated, pre-entry climate control will take place for the entire vehicle.

Seat heating/ventilation for the driver's and front passenger seats will also be activated as well as rear climate control.

The zone selected for pre-entry climate control also has an effect on rear climate control after the vehicle is started. If the Driver's seat only setting is activated, rear climate control will be switched off after the vehicle is started. If the setting is deactivated, the setting for rear climate control most recently selected will remain active.

Activating/deactivating pre-entry climate control at departure time

Requirements:

- The high-voltage battery is charged sufficiently.
- The function has been activated via the air-conditioning menu in the multimedia system.

▶ **To activate:** set the departure time.

During cooling, the following functions will be activated as needed:

- Automatic climate control
- Blower
- Seat ventilation

During heating, the following functions will be activated as needed:

- Automatic climate control
- Blower
- Seat heating
- Rear window heater

Pre-entry climate control will switch on a maximum of 50 minutes before the selected departure time. It will remain active for another ten minutes if departure is delayed.

▶ **To switch off:** press the top or bottom section of the [ ] rocker switch.

The following functions will also remain active once the vehicle has been started:

- Seat heating
- Seat ventilation

ⓘ The departure time and the pre-entry climate control can also be set via Mercedes me connect (→ page 182).

Switching pre-entry climate control on or off via the button

Requirements:

- The vehicle is switched off.

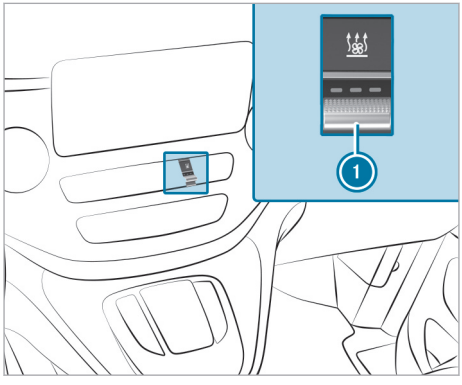

Air-conditioning of the vehicle interior can continue for up to 30 minutes, e.g. if the journey is interrupted.

▶ **To switch on/off:** press the top or bottom section of rocker switch (1).
The specified temperature for pre-entry climate control corresponds to the temperature most recently set on the climate control operating unit.
The red or blue indicator lamp on button will light up or go out.

The colours of the indicator lamp have the following meanings when the vehicle is switched off:

- **Blue:** cooling activated
- **Red:** heating activated
- **Yellow:** departure time preselected

Driving

Notes on electric mode

DANGER Risk of fire and explosion from excessive internal pressure of the high-voltage battery

In the event of a vehicle fire, flammable gas can escape and ignite.

- ▶ Stop the charging process immediately in case of unusual odours, smoke or burn marks.
- ▶ Leave the danger zone immediately. Secure the danger zone at a sufficient distance.
- ▶ Call the fire service.

WARNING Risk of chemical burns and poisoning from damaged high-voltage battery

If the housing of the high-voltage battery has been damaged, electrolyte and gases may leak out.

- ▶ Avoid contact with the skin, eyes or clothing.
- ▶ Immediately rinse electrolyte splashes off with water and seek medical attention straight away.

Observe the following notes on vehicle noise emissions and the acoustic vehicle alerting system:

- The vehicle is equipped with a purely electric drive system and develops considerably lower vehicle noise emissions than vehicles with a combustion engine.

  This is why the vehicle is equipped with a sound generator, which serves as an acoustic vehicle alerting system (AVAS). This safety system is prescribed by law.

  The external noise of the sound generator is perceptible in the vehicle interior at low speeds and does not represent a malfunction.
- The sound generator generates speed-dependent vehicle noise emissions when the vehicle is driving forwards or reversing at a speed of up to around 30 km/h.

  This helps other road users – especially pedestrians and cyclists – to hear your vehicle better.
- From a speed of 20 km/h, the acoustic vehicle alerting system gradually switches off.
- Despite the sound generator, the vehicle still may not be heard by other road users. Adapt your driving style accordingly.
- The sound generator is off when the vehicle is stationary.

Manually disconnecting the high-voltage on-board electrical system

DANGER Risk of death and fire due to modified and/or damaged components of the high-voltage on-board electrical system

The vehicle's high-voltage on-board electrical system is under high voltage. If you modify component parts in the vehicle's high-voltage on-board electrical system or touch damaged component parts, you may be electrocuted. In addition, modified and/or damaged components may cause a fire.

In the event of an accident or impact to the vehicle underbody, components of the high-voltage electrical system may be damaged although the damage is not visible.

- ▶ Never make any modifications to the high-voltage on-board electrical system.
- ▶ Do not switch on or use the vehicle if its high-voltage on-board electrical system components have been modified or damaged.
- ▶ Never touch damaged components of the high-voltage on-board electrical system.
- ▶ After an accident, do not touch any components of the high-voltage on-board electrical system.
- ▶ After an accident, have the vehicle transported away.
- ▶ Have the components of the high-voltage on-board electrical system checked at a qualified specialist workshop and replaced if necessary.

Requirements:

- The [ ] restraint system warning lamp lights up in the instrument cluster, e.g. after an accident.
- The vehicle is badly damaged, e.g. after an accident, and the restraint system components have not been triggered.
- The vehicle has not been started.
- The vehicle is secured against rolling away.

Using the high-voltage disconnect device in the engine compartment

Only disconnect the drive system manually under the prerequisites in the specified situations.

▶ Open the bonnet (→ page 214).

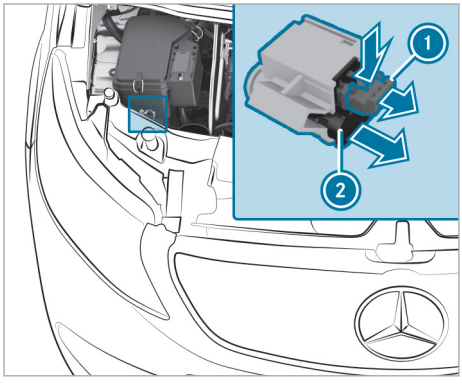

▶ Press release tab ① in the direction of the arrow and pull it out.

▶ Pull high-voltage disconnect device ② in the direction of the arrow until it engages.
The drive system has been disconnected. The capacitors of the vehicle's high-voltage electrical system are completely discharged after one minute at the earliest.

All work on the drive system may only be carried out at a qualified specialist workshop, even if it has been deactivated manually.

Using the high-voltage rescue separation point in the seat base of the right-hand front seat

The drive system may only be manually disconnected in the situations mentioned above under Requirements. The high-voltage rescue separation point is located in the seat base of the right-hand front seat and is only to be used in an emergency by rescue teams.

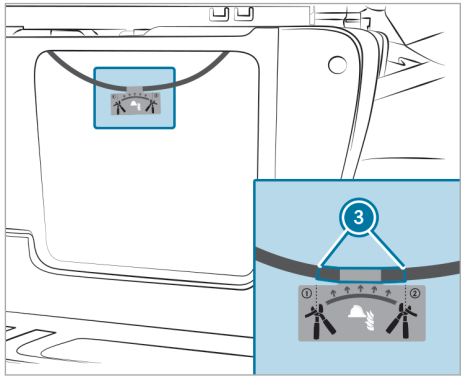

▶ Open the seat base of the right-hand front seat.

▶ Using an appropriate tool, cut the orange cable at positions ③ as shown on the sign, and remove the severed piece of cable.
The drive system has been disconnected. The capacitors of the vehicle's high-voltage electrical system are completely discharged after one minute at the earliest.

All work on the drive system may only be carried out at a qualified specialist workshop, even if it has been deactivated manually.

Regenerative brake system

Function of the regenerative brake system

Depending on the selected recuperation level, the electric motor is operated as an alternator when in overrun mode and during braking in order to charge the high-voltage battery while driving. As soon as you release the accelerator pedal when the vehicle is in motion, recuperation in overrun mode is initiated.

The regenerative brake system has the following characteristics:

- supports braking with an electronically controlled brake force boosting
- converts the kinetic energy of the vehicle into electric energy

You can use the steering wheel gearshift paddles to manually adjust the intensity of recuperation in overrun mode (→ page 129).

System limits

The braking effect of the electric motor during recuperation in overrun mode may be reduced or may not be available at all in the following situations:

- when the high-voltage battery charge level increases
- if the high-voltage battery is not yet at a normal operating temperature
- when driving at very slow speeds (near standstill)
- in transmission position N
- during and after ESP® intervenes

Manually setting recuperative deceleration

You can use the steering wheel gearshift paddles to manually adjust the intensity of recuperation in overrun mode.

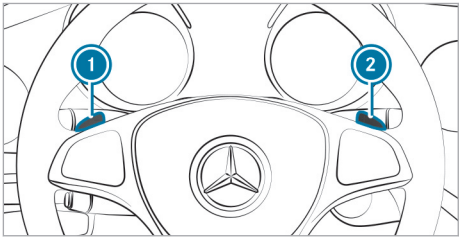

The higher the recuperation, the more sharply the vehicle is braked when coasting and the more electrical energy is fed into the high-voltage battery.

ⓘ Recuperation level D is automatically set after restarting the vehicle.
If recuperation level D AUTO has already been selected, it remains set even after the vehicle is started again.

▶ **To increase recuperation:** briefly pull steering wheel gearshift paddle ①.

▶ **To decrease recuperation:** briefly pull steering wheel gearshift paddle ②.

▶ **To select D AUTO:** pull and hold steering wheel gearshift paddle ① or ②.

The following recuperation levels are available:

- D AUTO Radar-supported recuperation taking road and traffic conditions into account, or intelligent and anticipatory recuperation with ECO Assist
- D + No recuperation: the vehicle coasts, rolls freely
- D Normal recuperation (standard setting)
- D – Increased recuperation: increased deceleration in overrun mode
- D – – Maximum recuperation: maximum deceleration in overrun mode

The display in the instrument cluster shows the recuperation level currently set in the transmission position display, e.g. D –.

ⓘ In addition to radar detection, ECO Assist analyses other data for the expected route. This allows ECO Assist to help optimally adjust the driving style for the route ahead, use minimal energy and recuperate.

Key positions

⚠ **WARNING** Accident- and risk of injury with unsupervised children in the vehicle

If you leave children unattended in the vehicle, they can in particular

- Open doors and thereby endanger other persons or road users.
- get out of the car and are hit by traffic.
- Operate vehicle equipment and become trapped, forexample.

In addition, the children could also set the vehicle in motion, for exampleby:

- releasing the parking brake.
- change the gearbox setting.
- start the vehicle.

▶ Never leave children unattended in the vehicle.

▶ When leaving the vehicle, always take the SmartKey with you and lock the vehicle.

▶ Keep the key out of reach of children.

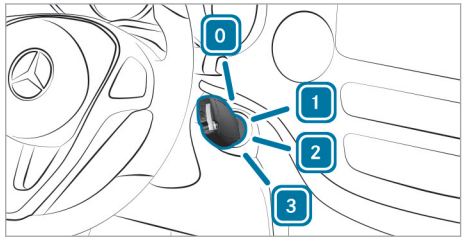

0 Insert/remove the key
1 Switch on the power supply

2 Switch on vehicle
3 Starting the vehicle

ⓘ If the key does not belong to the vehicle, it can still be turned in the ignition lock. The vehicle will not be switched on and cannot be started.

▶ Insert the key into the ignition lock in position 0 and turn it to the desired position.

Running-in notes

After the vehicle has been delivered or after repairs, the sensor system of some driving systems and driving safety systems adjusts itself automatically after the vehicle has been driven a certain distance. Full system effectiveness is not reached until the end of this teach-in process.

New or replaced brake pads, brake discs and tyres only provide optimal braking and grip after several hundred kilometres. Until then, compensate for the reduced braking effect by depressing the brake pedal with greater force.

Driving tips

Notes on driving

⚠ **WARNING** Risk of accident due to objects in the driver's footwell

Objects in the driver's footwell may impede pedal travel or block a depressed pedal.

This jeopardises the operating and road safety of the vehicle.

▶ Stow all objects in the vehicle securely so that they cannot get into the driver's footwell.

▶ Ensure floor mats and carpets cannot slip and provide sufficient room for the pedals.

▶ Do not lay multiple floor mats or carpets on top of one another.

⚠ **WARNING** Risk of accident due to incorrect footwear

Incorrect footwear includes, for example:

- shoes with platform soles
- shoes with high heels
- slippers

There is a risk of an accident.

▶ Always wear suitable footwear so that you can operate the pedals safely.

⚠ **WARNING** Risk of accident if the vehicle is switched off while driving

If you switch off the vehicle while driving, safety functions are restricted or no longer available.

This may affect the power steering system and the brake force boosting, for example.

You will need to use considerably more force to steer and brake, for example.

▶ Do not switch off the vehicle while driving.

⚠ **WARNING** Risk of skidding and accidents due to an increased recuperation level on a slippery carriageway

If the recuperation level is increased on a slippery carriageway, the drive wheels may lose traction.

Do not increase the recuperation level on a slippery carriageway.

! **NOTE** Damage to the vehicle due to not observing the maximum permitted headroom clearance

If the vehicle height is greater than the maximum permitted headroom clearance, the roof and other parts of the vehicle may be damaged.

▶ Observe the signposted headroom clearance.

▶ If the vehicle height is greater than the permitted headroom clearance, do not enter.

▶ Observe the changed vehicle height with add-on roof equipment.

ⓘ Please bear in mind that all the speeds indicated in this Owner's Manual are approximate and are subject to a certain tolerance.

Information about transport by rail

Transporting your vehicle by rail may be subject to certain restrictions or require special measures to be taken in some countries due to varying tunnel heights and loading standards.

You can obtain information about this from a Mercedes-Benz Service Centre.

Notes on brakes

WARNING Risk of accident due to the brake system overheating

If you leave your foot on the brake pedal when driving, the brake system may overheat.

This increases the braking distance and the brake system can even fail.

- Never use the brake pedal as a footrest.
- Do not depress the brake pedal and the accelerator pedal at the same time while driving.

Downhill gradients

On long, steep downhill gradients, you can reduce the load on the brakes by increasing the level of recuperation (→ page 129).

Recuperation allows the vehicle to be decelerated without placing a load on the brake system. This prevents the brakes from overheating and wearing excessively.

Heavy and light loads

If the brakes have been subjected to a heavy load, do not stop the vehicle immediately. Drive on for a short while. This allows the airflow to cool the brakes more quickly.

If the brakes have been used only moderately, you should occasionally test their effectiveness. To do this, brake more firmly from a higher speed while paying attention to the traffic conditions. The brakes will grip better as a result.

Wet road surfaces

If you have been driving for a long time in heavy rain without braking, there may be a delayed response when you first apply the brakes. This may also occur after driving through a car wash or deep water. You must depress the brake pedal more firmly. Maintain a greater distance to the vehicle in front.

While paying attention to the traffic conditions, you should brake the vehicle firmly after driving on a wet road surface or through a car wash. This heats the brake disks so that they dry more quickly, which protects them against corrosion.

Limited braking effect on salt-treated roads:

- Due to salt build-up on the brake disks and brake linings, the braking distance can increase considerably or result in one-sided braking.
- Maintain a much greater safety distance to the vehicle travelling ahead.

To remove the layer of salt:

- Brake occasionally, paying attention to the traffic conditions.
- Carefully depress the brake pedal at the end of the journey and when starting the next journey.

New brake disks and brake linings

New brake linings and brake disks only reach their optimal braking effect after approximately 100 km.

Compensate the reduced braking effect by applying greater force to the brake pedal. For safety reasons, Mercedes-Benz recommends that you only have brake linings and brake disks which are approved by Mercedes-Benz installed on your vehicle.

Other brake disks or brake linings may compromise the safety of your vehicle.

Always replace all brake disks and brake linings on an axle at the same time. Always fit new brake linings when replacing brake disks.

Information on driving on wet roads

Notes on aquaplaning

Aquaplaning can take place once a certain amount of water has accumulated on the road surface.

Observe the following notes during heavy precipitation or in conditions in which aquaplaning may occur:

- reduce speed
- avoid tyre ruts
- avoid sudden steering movements
- brake carefully

Also observe the notes on regularly inspecting wheels and tyres (→ page 233).

Notes on driving through water on the road surface

Water which has entered the vehicle can damage the drive system, electrics and transmission.

Observe the following if you must drive through water:

- The water, when calm, may only reach the lower edge of the vehicle body.
- Drive at walking pace at most; water can otherwise enter the vehicle interior.
- Vehicles travelling in front, or oncoming vehicles, can create waves which may exceed the maximum permissible depth of the water.

The braking effect of the brakes is reduced after fording. Brake carefully while paying attention to the traffic conditions until the braking effect has been fully restored.

Information about driving in winter

WARNING Risk of skidding and accidents due to an increased recuperation level on a slippery carriageway

If the recuperation level is increased on a slippery carriageway, the drive wheels may lose traction.

Do not increase the recuperation level on a slippery carriageway.

If the vehicle threatens to skid, or cannot be stopped when travelling at a low speed, you can stabilise the vehicle using the following measures:

- Shift the transmission to neutral N.
- Try to maintain control of the vehicle using corrective steering.

Drive particularly carefully on slippery roads. Avoid sudden acceleration, steering and braking manoeuvres.

Have your vehicle winterproofed at a qualified specialist workshop in good time at the onset of winter.

Please observe the notes on snow chains (→ page 234).

Regularly check the vehicle and remove snow or ice when travelling in wintry conditions.

An accumulation of snow and ice, particularly when frozen in the area around moving parts, the axles and the wheel wells may cause the following problems:

- Damage to vehicle parts
- Malfunctions due to restriction of the movement intended by the design (e.g. reduced steering movement)

If there is any damage, inform a qualified specialist workshop.

Function of the energy flow display

1. State of charge of the high-voltage battery
2. Electric motor (drive system)
3. Energy flow
4. High-voltage battery

The active components of the drive system are highlighted on the energy flow display. The energy flow between the individual components is shown in colour.

The energy flow will be shown in different colours depending on the operating status:

- **White:** hard acceleration (boost)
- **Copper:** driving at constant speed or with moderate acceleration
- **Blue:** recuperation, charging the high-voltage battery or overrun mode

Displaying the energy flow display

Multimedia system:

▶ Press the ⌂ symbol on the touchpad.

▶ Select the EQ menu.

▶ Select the menu item Energy flow.

The current state of charge of the high-voltage battery is displayed in addition to the energy flow.

Function of the ECO display

The ECO display summarises your driving characteristics from the start of the journey to its completion and assists you in achieving the most economical driving style. If you interrupt your journey and switch off the vehicle for longer than four hours, the ECO display values will automatically be reset.

You can influence consumption if you:

- Anticipate road and traffic conditions.
- Drive in drive program [E] or [E] [+] (→ page 135).

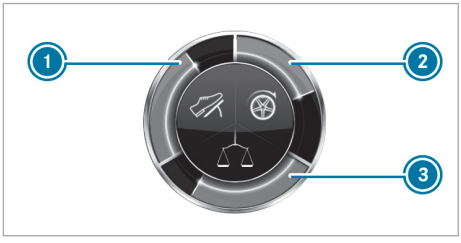

The inner segment lights up green and the outer segment fills up:

- (1) Moderate acceleration
- (2) Gentle deceleration and coasting
- (3) Consistent speed

The inner segment is grey and the outer segment empties:

- (1) Sporty acceleration
- (2) Heavy braking
- (3) Fluctuating speed

You are driving economically if the edge of the ECO display lights up and the three outer segments are completely full at the same time.

The additional range achieved as a result of your driving style in comparison with a driver with a very sporty driving style is shown under Bonus from start. The range displayed does not indicate a fixed reduction in consumption.

Activating the ECO display

On-board computer:

▶ Press the [⌂] button on the steering wheel.

▶ Select the Trip menu.

▶ Select ECO display.
The instrument cluster display will show the ECO display.

Transmission

DIRECT SELECT lever

Function of the DIRECT SELECT lever

⚠ **WARNING** Accident- and risk of injury with unsupervised children in the vehicle

If you leave children unattended in the vehicle, they can in particular

- Open doors and thereby endanger other persons or road users.
- get out of the car and are hit by traffic.
- Operate vehicle equipment and become trapped, forexample.

In addition, the children could also set the vehicle in motion, for exampleby:

- releasing the parking brake.
- change the gearbox setting.
- start the vehicle.

▶ Never leave children unattended in the vehicle.

▶ When leaving the vehicle, always take the SmartKey with you and lock the vehicle.

▶ Keep the key out of reach of children.

You use the DIRECT SELECT lever to switch the transmission position. The current transmission position will appear on the display on the instrument cluster.

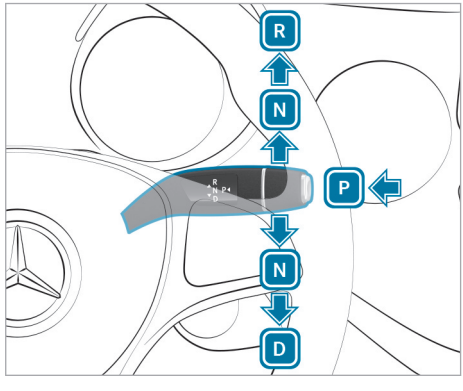

[P] Park position
[R] Reverse gear
[N] Neutral
[D] Drive position

Engaging reverse gear R

▶ Depress the brake pedal and push the DIRECT SELECT lever upwards past the first point of resistance.

Selecting neutral N

⚠ **WARNING** Risk of accident and injury when neutral position is engaged

If you park the vehicle with the transmission in neutral position N and the parking brake is not engaged, the vehicle may roll away.

There is a risk of accident and injury!

▶ Before parking the vehicle, apply the parking brake.

▶ Press the brake pedal and the DIRECT SELECT lever upwards or downwards to the first point of resistance.

Subsequently releasing the brake pedal will allow you to move the vehicle freely, e.g. to push it or tow it away.

If the transmission is also to stay in neutral N when the vehicle is switched off, proceed as follows:

▶ Start the vehicle.

▶ Depress the brake pedal and engage neutral N.

▶ Release the brake pedal.

▶ Switch off the vehicle.

ⓘ If you then exit the vehicle leaving the key in the vehicle, the transmission will remain in neutral N.

Engaging park position P

! **NOTE** Damage due to engaging park position P while the vehicle is rolling

If you shift the transmission into park position P while the vehicle is rolling, the transmission may be damaged.

▶ If the vehicle is rolling, do not open a door.

▶ Only engage the park position P when the vehicle is stationary.

▶ Observe the notes on parking the vehicle (→ page 145).

▶ Depress the brake pedal until the vehicle comes to a standstill.

▶ When the vehicle is stationary, press button P.
Park position is engaged when the display on the instrument cluster shows the transmission position display P. If the transmission position display P does not appear, secure the vehicle to prevent it from rolling away.

Park position P is engaged automatically when one of the following conditions is met:

- You switch the vehicle off with the transmission in position D or R.
- You release the driver's seat belt buckle when the HOLD function is activated.
- You open the driver's door while the vehicle is stationary with the transmission in position D or R.
- You remove the key.

ⓘ If you would like to manoeuvre with the driver's door open, open the driver's door while stationary and engage transmission position D or R again.

Engaging drive position D

▶ Depress the brake pedal and push the DIRECT SELECT lever downwards past the first point of resistance.

Drive programs

Function of the DYNAMIC SELECT switch

Use the DYNAMIC SELECT switch to change between the following drive programs.

The drive program selected appears on the instrument cluster display next to the transmission position display. After starting the vehicle, the transmission switches automatically to drive program C.

S Sport

- Maximum power availability
- Sporty and dynamic driving characteristics

C Comfort

- Comfortable driving style
- Best balance between efficiency and performance for all driving situations

E Eco

- Efficient and economical driving style
- Limited heating and air-conditioning output

E + Eco+

- Particularly efficient and economical driving style
- Very limited heating and air-conditioning output

/ Lift (vehicles with AIRMATIC):

- Driving up to a speed of approx. 30 km/h with increased vehicle level for greater ground clearance
- Best balance of efficiency and performance for driving when the vehicle level is raised
- Starting from a speed of approx. 100 km/h, automatic change after C

ⓘ For drive program **Lift**, the instrument cluster display shows the symbol next to the transmission position display. The display shows the symbol.

The selected drive program also affects heating and climate control performance (→ page 119).

Selecting the drive program

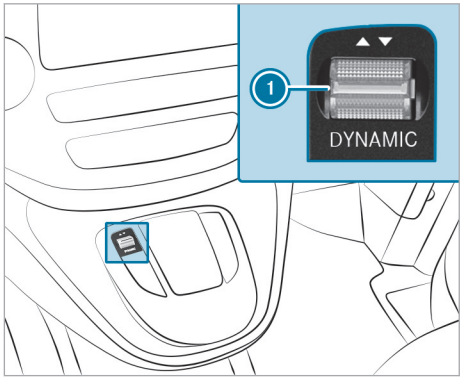

▶ Press the DYNAMIC SELECT switch ① forwards or backwards.
The selected drive program appears in the instrument cluster display.

AIRMATIC

Function of AIRMATIC

AIRMATIC is an air suspension system with an all-round level control system, which also ensures the best possible suspension and constant ground clearance, even with a laden vehicle. When you drive at speed, the vehicle is lowered automatically to improve driving safety and to reduce energy consumption. There is also the option of raising the vehicle level while driving slowly. The AIRMATIC settings are dependent on the drive program selection.

AIRMATIC consists of the following functions and components:

- all-round air suspension
- speed-dependent lowering to reduce energy consumption
- high level for greater ground clearance when driving slowly, set with drive program **Lift** /
- DYNAMIC SELECT switch

ⓘ For drive program **Lift**, the instrument cluster display shows the symbol next to the transmission position display. The display shows the symbol.

Vehicle levels per drive program

Drive programs C and E:

- the vehicle is set to normal level
- at speeds above approx. 110 km/h, the vehicle is lowered
- at speeds below approx. 75 km/h, the vehicle is raised again

Drive programs S and E +:

- the vehicle is set to low level
- at higher speeds, the vehicle level does not continue to lower

Drive program /:

- the vehicle is set to high level
- at speeds above approx. 30 km/h, the vehicle level lowers to normal level
- at speeds below approx. 10 km/h, the vehicle is raised again
- at speeds above approx. 100 km/h, the vehicle switches to drive program C

ⓘ If the vehicle is raised in drive program **Lift** or lowered when changing from drive program **Lift** to another drive program, occasional creaking noises may occur at the brake.

System limits

If overheating protection has been activated due to several level changes in a short period of time, AIRMATIC will not function or its availability will be limited. The Compressor is cooling message is shown in the multifunction display.

After the cooling phase, AIRMATIC is again available without restrictions.

Charging the high-voltage battery

Notes on charging the high-voltage battery

Information on the nominal voltage range and charging times can be found in the technical data (→ page 251).

NOTE High-voltage battery damage due to leaving the vehicle idle for lengthy periods of time

Lithium-ion batteries experience a natural self-discharge.

Exhaustive discharging can therefore occur if the vehicle is idle for several months. This can damage the high-voltage battery.

▶ To avoid damage, please observe the following recommendations when handling the high-voltage battery.

NOTE Accelerated ageing of the high-voltage battery due to not observing the following recommendations

As a result of its basic characteristics, the storage capacity of, and the amount of energy available from, the high-voltage battery decreases over the course of its life. As a result, the maximum electrical range that can be achieved by the vehicle is reduced and its maximum electrical output can be impaired.

The following factors could accelerate the ageing of the high-voltage battery:

- frequently fully charging (charge level 100%) the high-voltage battery, especially when this process is not directly followed by a journey
- frequent rapid charging with direct current (mode 4)
- leaving the vehicle idle for lengthy periods at high ambient temperatures

▶ To avoid accelerated ageing, please observe the following recommendations when handling the high-voltage battery.

NOTE Damage to the drive system when charging the high-voltage battery at extreme altitudes

The drive system may be damaged if the high-voltage battery is charged at elevations greater than 4,000 m above sea level.

It may then no longer be possible to continue the journey.

▶ Avoid charging processes at extreme altitudes.

Recommendations when handling the high-voltage battery:

- Only rapid-charge the high-voltage battery with direct current (mode 4) if necessary.
- Charge the high-voltage battery to a charge level of 85% on average. Beyond a charge level of 85%, the charging time is significantly increased.
- If leaving the vehicle idle for lengthy periods, park up the vehicle with a high-voltage battery charge level between 30% and 50%. Do not keep the high-voltage battery continuously connected to power supply equipment.
- If leaving the vehicle idle for lengthy periods of time avoid, if possible, high and low outside temperatures.
- Check the high-voltage battery's level of charge every six weeks (→ page 171).
- If the charge level is below 30%, recharge the high-voltage battery.
- Do not disconnect the 12 V on-board electrical system battery even if the vehicle is left idle for long periods. The vehicle cannot otherwise monitor the charge level of the high-voltage battery.

You can contribute to reducing the vehicle's energy consumption in the following ways:

- an anticipatory driving style (→ page 132)
- reduced use of electrical consumers
- having the vehicle regularly maintained

The charging time of the high-voltage battery may change over the course of its life.

ⓘ The on-board computer displays the charge level of the high-voltage battery in the instrument cluster display (→ page 171).

You can charge the high-voltage battery with both alternating current (mode 2 or 3) and direct current (mode 4).

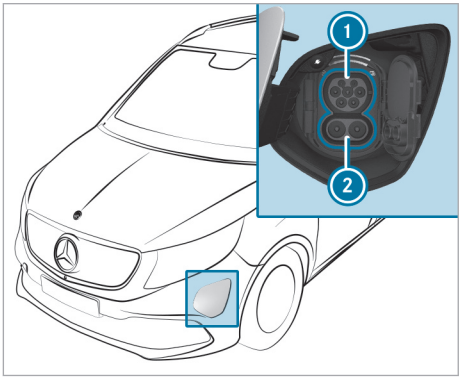

1 Socket for charging with alternating current
2 Socket extension for charging with direct current

ⓘ When using a CCS (Combined Charging System) charging cable to charge with direct current, both areas of the vehicle socket are covered by the charging cable connector.

The high-voltage battery can be charged as follows:

- charging through recuperation while the vehicle is in motion
- Stationary charging with alternating current:
  - at a mains socket (mode 2)
  - at a wallbox or charging station (mode 3)
- Stationary charging with direct current:
  - at a rapid charging station (mode 4)

Depending on your vehicle's charging cable, single-phase AC charging with maximum output is also possible.

Observe any possible different local grid requirements of your current location when charging. Only use charging cables which conform to the grid requirements. Consult a qualified electrician or your local grid operator if you have any questions.

You can also set a limit for the maximum permissible charging current when charging the high-voltage battery with alternating current. This can protect the mains supply from overloading when, for example, you are recharging the vehicle using a mains socket with minimal protection.

It is recommended that you charge the high-voltage battery at a wallbox or charging station due to the improved charging performance and better charging efficiency offered.

System limits

The charging time of the high-voltage battery may be increased by the following:

- high or low outside temperatures
- the vehicle being non-operational for long periods without charge
- the maximum available charging current of the wallbox or power supply equipment
- the settings for the charging process in the onboard computer (→ page 138)

Stowing the charging cable

Always stow the vehicle's charging cable in the charging cable bag provided, and secure the charging cable bag in the load compartment with the included retaining strap. Otherwise, the charging cable bag with the charging cable is not sufficiently secured.

Example: charging cable bag in the load compartment

As delivered, charging cable bag 1 with retaining strap 2 is located in the load compartment. To secure the charging cable bag, the retaining strap must be attached to tie-down eye 3.

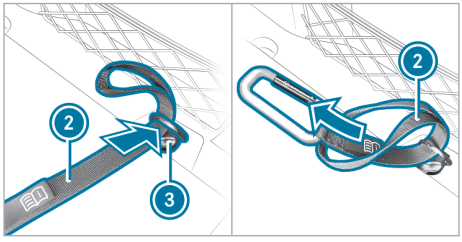

- Feed the loop end of retaining strap ② through tie-down eye ③ into the load compartment.
- Feed the end with the snap hook through the loop of retaining strap ②.

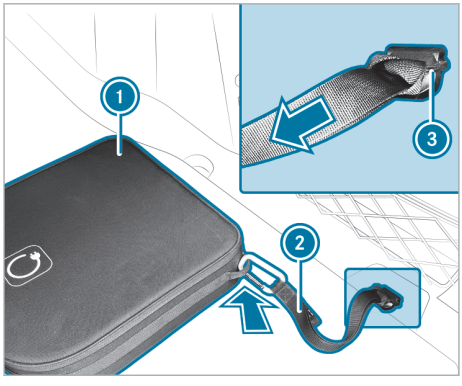

- Tighten retaining strap ② so that the knot around tie-down eye ③ is tight and secure.
- Hook the snap hook of retaining strap ② in a tie-down eye of charging cable bag ①.

Function of the charging prediction

When the vehicle is connected to the mains supply and the vehicle is switched off, the display in the instrument cluster automatically shows the charge level display with a charging prediction. The display automatically switches off after approximately two minutes.

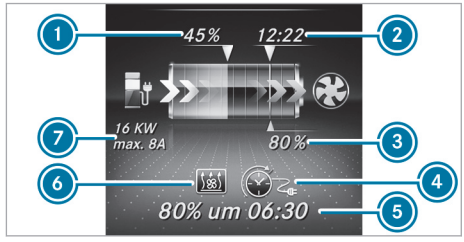

① Current charge level
② Estimated time for set charge level ③
③ Set charge level
④ Display for active/inactive departure time (→ page 138)
⑤ Estimated charge level at set departure time
⑥ Display if pre-entry climate control has been set (→ page 124)
⑦ Current charging power output and set charging current limit (→ page 138)

Setting the charging process

Multimedia system:

→ ⌂ ▸▸ EQ ▸▸ Charging options

Setting the charging process

- Select Departure time.

The following charging times can be selected:

- Charge immediately (no departure time)
- Once

- Select a setting.

Setting a single departure time

- Select Departure time.
- Select Edit single time.
- Set a departure time.

Setting the maximum charging current

- Select Maximum charge current.
- Select Maximum, 8 amps or 6 amps.
  When the high-voltage battery is charged, the charging current is limited to the selected amperage.

ⓘ The actual value of the maximum charging current depends on the fixed value of the charging cable provided.

ⓘ For safety reasons, only use the charging cable supplied with the vehicle or an original Mercedes-Benz charging cable. Mercedes-Benz thoroughly tests these original charging cables for their suitability for high-voltage charging of your vehicle. Purchase these parts at a Mercedes-Benz Service Centre and obtain advice there.

Setting the maximum charge level

▶ Select Maximum charge state.

▶ Set the desired percentage.
The high-voltage battery is charged up to the set percentage as a maximum.

ⓘ The percentage can be set in increments of 10%.
A maximum charge level of 80% is recommended. Higher maximum charge levels can diminish the longevity of the high-voltage battery (→ page 136).

ⓘ As soon as the full charge level is reached, a notification is shown in the multimedia system display that the charging process is completed and the journey may be continued.

Functions of the indicator lamps on the vehicle socket

The socket flap is centrally locked and unlocked together with the vehicle.

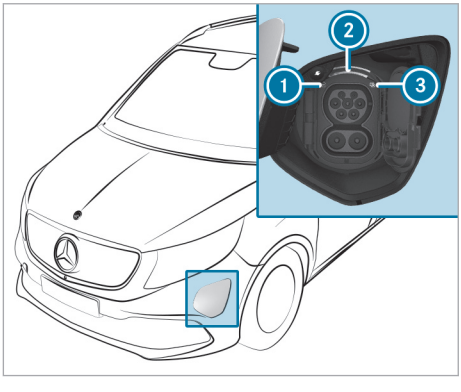

① Locking status indicator lamp
② Status display
③ Charging process indicator lamp

Status display ② flashes or lights up as with indicator lamps ① and ③.

Overview of the locking status ①

Display	Meaning
Lights up white	Vehicle socket unlocked, insert or remove charging cable
Flashes white	Malfunction during locking or unlocking

Overview of the charging process status ③

Display	Meaning
Flashes orange	Connection is being established
Flashes green	Active energy flow
Lights up orange	Charging paused
Lights up green	Charging process completed
Flashes red (for approx. 90 s)	Malfunction when charging

Notes on charging the high-voltage battery at the mains socket (mode 2)

⚠ **DANGER** Risk of fatal injury from incorrectly installed component parts

Connecting the charging cable to a mains socket using incorrectly installed component parts could cause a fire or an electric shock, for example.

▶ Only connect the charging cable to a mains socket that:

- Has been properly installed and
- Has been inspected by a qualified electrician

▶ For safety reasons, only use the charging cable supplied with the vehicle or an original Mercedes-Benz charging cable.

▶ Purchase these parts at a Mercedes-Benz Service Centre and obtain advice there.

Mercedes-Benz thoroughly tests these original charging cables for their suitability for high-voltage charging of your vehicle.

▶ Never use a damaged charging cable.

▶ Do not use:
- Extension cables
- Extension reels
- Multiple sockets

▶ Never use socket adapters to connect the charging cable to the mains socket. The only exception being if the adapter has been tested and approved by the manufacturer for charging the high-voltage battery of an electric vehicle.

▶ Observe the safety notes in the operating instructions for the socket adapter.

NOTE Overloading the mains socket due to excessive charging current

If the charging current is too high, the fuse could be tripped or the external mains supply could overheat.

▶ Make sure that the external mains supply has been designed to handle the set charging current.

▶ If necessary, reduce the set charging current or use a different mains socket.

▶ For safety reasons, only use the charging cable supplied with the vehicle or an original Mercedes-Benz charging cable.

▶ Purchase these parts at a Mercedes-Benz Service Centre and obtain advice there.

Mercedes-Benz thoroughly tests these original charging cables for their suitability for high-voltage charging of your vehicle.

▶ Check the setting of the maximum charge current using the charging capacity shown in the display of the instrument cluster.

Before charging at a mains outlet, have the maximum permissible charging current for the relevant mains outlet or the building inspected by a qualified electrician.

The charging cable can be set to a country-specific maximum charging current value. When charging abroad, the maximum value may exceed the permitted value for that country.

When abroad, observe the country-specific laws when charging.

Only charging cables which fulfil the local grid requirements of your location and are approved for your vehicle may be used.

If you have questions concerning charging cables or if there is a malfunction, please contact a qualified specialist workshop.

You can set the maximum permissible charging current in the on-board computer (→ page 138).

The charging process can vary depending on the power supply equipment.

ⓘ If the vehicle requires more time than usual to charge the high-voltage battery, check the maximum charging current settings in the on-board computer.

Short charging times can be achieved in the following ways:
- charging at a wallbox
- charging at a charging station

When doing so, always observe the local information.

Notes on charging the high-voltage battery at a wallbox or charging station (mode 3)

DANGER Risk of fatal injury from incorrectly installed component parts

Connecting the charging cable to a wallbox using incorrectly installed component parts could cause a fire or an electric shock, for example.

▶ Only connect the charging cable to a wallbox that:
- Has been properly installed and
- Has been inspected by a qualified electrician

▶ For safety reasons, only use charging cables that have been tested and approved by the manufacturer for charging the high-voltage battery in an electric vehicle.

▶ Never use damaged charging cables.

▶ Do not extend the charging cable.

▶ Do not use adapters.

▶ Observe the safety notes in the operating instructions for the wallbox.

Observe the local grid requirements of your current location when charging. Consult a qualified

electrician or your local distribution grid operator if you have any questions concerning grid requirements.

Only use the following charging cables for charging at a wallbox without a pre-installed cable:

- charging cables that have been tested and approved by the manufacturer for charging the high-voltage battery in an electric vehicle
- approved charging cables which conform to the grid requirements

DANGER Risk of fatal injury due to damaged components

Connecting the vehicle to a charging station using damaged component parts could cause a fire or an electric shock, for example.

- ▶ Perform a visual check of the charging station for obvious defects, for example damage to the housing or charging cable connection.
- ▶ Never use damaged charging cables.
- ▶ Do not use an extension for the charging cable.
- ▶ Do not use adapters.
- ▶ Always observe the safety instructions on the charging station.

Most charging stations must be activated before the charging process, e.g. using an RFID card. Observe the on-site operator's instructions for the charging station.

The amount of energy dispensed for the charging process, shown by the charging station, may be higher than the amount of energy actually absorbed by the high-voltage battery. This is the result of different levels of charging losses and is referred to as recharge efficiency. Charging losses occur, for example, due to heat that builds up when charging or from auxiliary consumers that are switched on. Further information on recharge efficiency can be obtained at a qualified specialist workshop.

Notes on charging the high-voltage battery at a rapid charging station (mode 4)

DANGER Risk of fatal injury due to damaged components

Connecting the vehicle to a charging station using damaged component parts could cause a fire or an electric shock, for example.

- ▶ Perform a visual check of the charging station for obvious defects, for example damage to the housing or charging cable connection.
- ▶ Never use damaged charging cables.
- ▶ Do not use an extension for the charging cable.
- ▶ Do not use adapters.
- ▶ Always observe the safety instructions on the charging station.

DANGER Risk of fatal injuries when carrying out maintenance work during the charging process

During the charging process, the high-voltage on-board electrical system is under high voltage.

- ▶ Do not perform any maintenance work during the charging process.

Most charging stations must be activated before the charging process, e.g. using an RFID card. Observe the on-site operator's instructions for the charging station.

The amount of energy dispensed for the charging process shown by the charging station may be higher than the amount of energy actually absorbed by the high-voltage battery. This is the result of different levels of charging losses and is referred to as recharge efficiency. Charging losses occur, for example, due to heat that builds up when charging or from auxiliary consumers that are switched on. Further information on recharge efficiency can be obtained at a qualified specialist workshop.

In order to protect the high-voltage battery and other charging components, the charging management of your vehicle continually controls the charging power for the current charging process. Therefore, the current charging power does not always equal the maximum available charging power at the charging station or the vehicle's maximum possible charging power. Depending on the temperature and the charge level of the high-voltage battery, the charging power increases or decreases during the charging process.

Due to legal regulations in the individual countries, the charging cable to the vehicle must not be longer than 30 m. This is to prevent the interference of signals being received by radio communication devices in the vehicle or in close proximity to the charging station. Be aware that parts of the charg-

ing cable may be routed underground. If in doubt, ask the charging station operator if this is the case before charging the high-voltage battery.

Starting the charging process

DANGER Risk of death when charging at a damaged socket

The charging process uses high voltage.

If the charging cable, the vehicle socket or the mains socket are damaged, you could receive an electric shock.

- ▶ Only use an undamaged charging cable.
- ▶ Avoid mechanical damage such as crushing, abrading or driving over the cable.
- ▶ Have a damaged vehicle socket replaced at a qualified specialist workshop as soon as possible.
- ▶ Never connect the charging cable to a damaged vehicle socket.

NOTE Damage to the vehicle due to overvoltage in the mains supply

The vehicle is equipped with an electrical fuse which protects it against overvoltage in the mains supply. This electrical fuse may trip during severe thunderstorms, for example, and may cause the fuse in the building to trip or may interrupt the charging process. These functions protect the vehicle.

After the fuse in the building is switched on again, the charging process resumes automatically.

Following an interruption in the power supply without the fuse in the building being tripped, it may take up to ten minutes for charging to resume automatically.

NOTE Damage due to overheating of charging cable and charging cable connector

During the charging process, the charging cable and charging cable connector can heat up within the permissible limits.

The permissible limit values are influenced by the following factors:

- the power supply system and the charging cable are not damaged
- the instructions for handling the charging cable and the control element on the charging cable have been observed

▶ If the charging cable or charging cable connector becomes too hot, have the power supply equipment checked.

NOTE Damaged or dirty vehicle socket when the socket flap is open

- ▶ Always keep the socket cover and the socket flap closed when there is no charging cable connected. This protects the vehicle socket from dirt and damage.
- ▶ Make sure that the socket cover is closed properly before closing the socket flap. This can otherwise result in damage which may prevent the socket flap from being opened again.

NOTE Damage to the vehicle socket or the charging cable connector due to incorrect handling

Do not use excessive force (maximum 300 N) to insert the charging cable connector into the vehicle socket to the stop. You may otherwise damage the vehicle socket, the charging cable connector or their contacts.

▶ If you feel there is increased resistance, pull the charging cable connector out of the socket and reinsert it.

Requirements:

- the transmission is in position P
- the vehicle has not been started
- the vehicle is unlocked
- the bonnet is closed (direct current charging)
- the charging cable is not taut

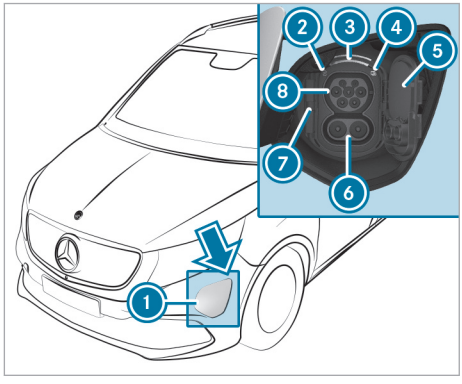

▶ To open socket flap ①, press the top right of the socket flap.
The [🔓] indicator lamp ② and status display ③ light up white.

ⓘ If the vehicle has been started (the [READY] display is lit in the instrument cluster), socket flap ① cannot be opened.

▶ To charge with alternating current, press the upper catch, and to charge with direct current, press both catches ⑦ to the left.
The respective socket cover ⑤ is opened.

ⓘ For the charging process with alternating current (mode 2/3), only connection ⑧ is required.

AC charging at a mains socket (mode 2)

▶ Insert the mains plug into the mains socket of the external power source as far as it will go.

▶ Set the maximum charging current if required (→ page 138).

▶ Insert the charging cable connector into connection ⑧ of the vehicle socket. Connection ⑥ remains free and should remain covered by the lower part of socket cover ⑤.
The [⊟] indicator lamp ④ and status display ③ flash orange and, as soon as the high-voltage battery is charged, green.

AC charging at a wallbox or charging station (mode 3)

▶ Insert the charging cable connector into connection ⑧ of the vehicle socket. Connection ⑥ remains free and should remain covered by the lower part of socket cover ⑤. If the wallbox/charging station is not equipped with a connecting cable, insert the plug of the optional vehicle charging cable into the wallbox/charging station socket as far as it will go.
The [⊟] indicator lamp ④ and status display ③ flash orange and, as soon as the high-voltage battery is charged, green.

DC charging at a fast charging station (mode 4)

▶ Insert the CCS charging cable connector into the vehicle socket to the stop. Make sure that the charging cable is not taut when inserted.
The [⊟] indicator lamp ④ and status display ③ flash orange and, as soon as the high-voltage battery is charged, green.

When the charging cable is connected to the vehicle, the vehicle cannot be started or moved.

The charging process is aborted if you open the bonnet during this process (only for DC charging).

When the charging process is started, the estimated charging time is displayed in the instrument cluster. The charging prediction shows the predicted charge level at the set departure time or the time at which the high-voltage battery will be fully charged.

Observe any information which may be displayed in the instrument cluster:

- charging prediction (→ page 138)
- display messages (→ page 254)

ⓘ Depending on the temperature, the fan and battery cooling system may audibly switch on during the charging process.

ⓘ If the vehicle is left idle for long periods and connected to the alternating current mains supply (mode 2/3), the high-voltage battery will be recharged automatically as needed or when electrical consumers are activated (e.g. pre-entry climate control).

Ending the charging process

Requirements:

- the vehicle is unlocked

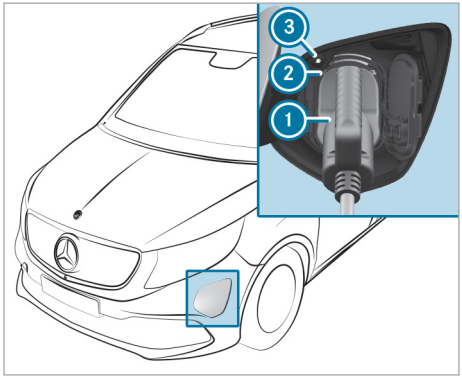

▶ Press charging interruption button ③.
The charging process is ended after a short time. If the [🔓] indicator lamp ② then lights up white, the vehicle socket is unlocked.

ⓘ Instead of pressing charging interruption button ③, you can press the [🔓] button on the key four times within two seconds.

▶ Remove charging cable connector ① from the vehicle socket within 30 seconds.
Only after charging with alternating current (mode 2/3) does the vehicle socket lock again after a period of 30 seconds, and the charging process resumes.

ⓘ If you cannot remove the charging cable connector, repeat the unlocking procedure. If the charging cable connector remains locked, unlock the charging cable connector with the emergency release (→ page 144).

▶ Close it, or close the socket cover and charge socket flap.

▶ Remove the charging cable connector from the mains socket, or from the socket on the wallbox/charging station, and stow the vehicle charging cable safely in the vehicle.

ⓘ After the charging cable connector has been disconnected, the left [🔓] indicator lamp ② on the vehicle socket remains lit for some time before going out.

Unlocking the charging cable connector with the emergency release

⚠ **WARNING** Risk of burns from hot components in the engine compartment

Certain components in the engine compartment can be very hot, e.g. the drive system and the cooler.

▶ Allow the drive system to cool down and touch only the components described below.

If you must unlock the charging cable connector mechanically, only touch the following components:

- bonnet
- emergency release cable

! **NOTE** Damaged or dirty vehicle socket when the socket flap is open

▶ Always keep the socket cover and the socket flap closed when there is no charging cable connected. This protects the vehicle socket from dirt and damage.

▶ Make sure that the socket cover is closed properly before closing the socket flap. This can otherwise result in damage which may prevent the socket flap from being opened again.

Requirements:

- the charging cable connector cannot be disconnected

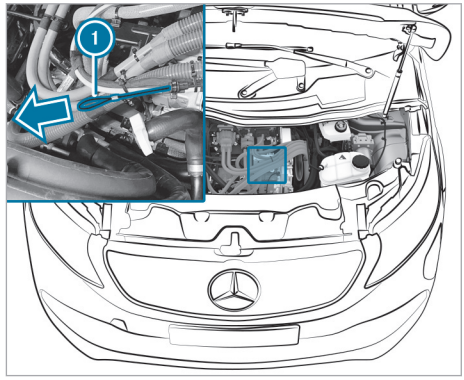

▶ Open the bonnet (→ page 214).

▶ Press the charging interruption button on the vehicle socket and check the indicator lamps

to see if the charging process has ended (→ page 144).

- Pull cable ① in the direction of the arrow and disconnect the charging cable connector from the vehicle socket within 30 seconds.
- Close the socket cover and the charge socket flap of the vehicle socket.
- Have the vehicle socket checked at a qualified specialist workshop.

Parking

Parking the vehicle

WARNING Accident- and risk of injury with unsupervised children in the vehicle

If you leave children unattended in the vehicle, they can in particular

- Open doors and thereby endanger other persons or road users.
- get out of the car and are hit by traffic.
- Operate vehicle equipment and become trapped, forexample.

In addition, the children could also set the vehicle in motion, for exampleby:

- releasing the parking brake.
- change the gearbox setting.
- start the vehicle.

- Never leave children unattended in the vehicle.
- When leaving the vehicle, always take the SmartKey with you and lock the vehicle.
- Keep the key out of reach of children.

NOTE Damage to the vehicle or the drive-train due to rolling away

- Always park your vehicle safely and according to legal requirements.
- Always properly secure the vehicle against rolling away.

WARNING Risk of accident and injury if parking brake is not applied

If you park the vehicle with the transmission in park position P and the parking brake is not engaged, the vehicle may roll away.

Engaging park position P is not a fully adequate replacement for the parking brake.

There is a risk of accident and injury!

- Secure the vehicle against rolling away as described below.

Observe the following points to ensure that the vehicle is properly secured against rolling away unintentionally.

- Always apply the parking brake.
- **On uphill or downhill gradients:** turn the front wheels towards the kerb.
- Shift the transmission to position P.
- Turn the key to position 0.

Electric parking brake

Information on the electric parking brake

WARNING Accident- and risk of injury with unsupervised children in the vehicle

If you leave children unattended in the vehicle, they can in particular

- Open doors and thereby endanger other persons or road users.
- get out of the car and are hit by traffic.
- Operate vehicle equipment and become trapped, forexample.

In addition, the children could also set the vehicle in motion, for exampleby:

- releasing the parking brake.
- change the gearbox setting.
- start the vehicle.

- Never leave children unattended in the vehicle.
- When leaving the vehicle, always take the SmartKey with you and lock the vehicle.
- Keep the key out of reach of children.

Observe the note on transporting animals in the vehicle (→ page 49).

For the automatic functions to work correctly, the driver must be seated in the correct seat position (→ page 69).

ⓘ The electric parking brake is only actually applied when the red (P) indicator lamp lights up continuously.

Function of the electric parking brake (applying automatically)

When you remove the key from the ignition lock when the vehicle is stationary, the parking brake is applied automatically.

The red [Ⓟ] indicator lamp lights up in the instrument cluster display. The electric parking brake is only actually applied when the red [Ⓟ] indicator lamp lights up continuously.

Function of the electric parking brake (releasing automatically)

The electric parking brake of your vehicle is released when all of the following conditions are fulfilled:

- the driver's seat is occupied
- the seat belt tongue of the seat belt is inserted into the driver's seat belt buckle
- the vehicle has been started
- you shift the transmission to position [D] or [R]

Applying/releasing the electric parking brake manually

Applying the electric parking brake

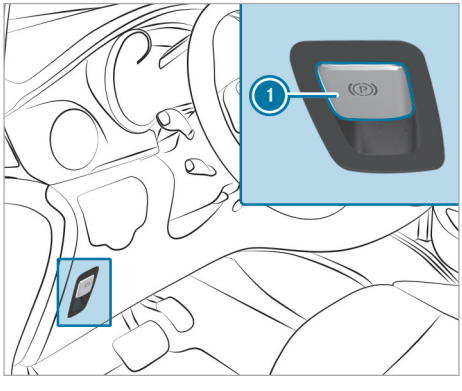

▶ Turn the key in the ignition lock to position [1] or [2].
If you turn the key to position [0] in the ignition lock, you can only apply the parking brake within the next five minutes.

▶ Press switch ①.
When the electric parking brake is applied, the red [Ⓟ] indicator lamp lights up in the instrument cluster display. The electric parking brake is only actually applied when the red [Ⓟ] indicator lamp lights up continuously.

Releasing the electric parking brake

▶ Turn the key in the ignition lock to position [1] or [2].
If you turn the key from position [1] to position [0] in the ignition lock, you can release the parking brake once.

▶ Depress the brake pedal.

▶ Pull switch ①.
The red [Ⓟ] indicator lamp goes out in the instrument cluster display.

ⓘ If you apply and release the parking brake frequently within a short period, it may not be possible to release the parking brake again in some cases. To protect it from damage, the parking brake is temporarily locked and cannot be released – repeat lock. The parking brake is operational again after approximately 20 seconds.

Emergency braking

If, in exceptional cases, the service brake fails, you can use the parking brake to perform emergency braking. The braking distance is then considerably greater.

▶ While driving, press switch ① of the electric parking brake.
The vehicle is braked as long as you keep switch ① of the electric parking brake depressed.

The vehicle's brake lights light up.

The longer electric parking brake switch ① is depressed, the greater the braking force.

During the braking procedure, you will receive the following feedback from the vehicle:

- A warning tone sounds.
- The Release parking brake message appears in the instrument cluster.
- The red [Ⓟ] indicator lamp flashes in the instrument cluster.

When the vehicle has been braked to a standstill, the electric parking brake is applied.

Parking up the vehicle

Measures for the 12 V on-board electrical system battery if the vehicle is idle for lengthy periods

▶ Seek advice from a qualified specialist workshop to avoid damage to the 12 V on-board electrical system battery due to deep discharge.

Measures for the high-voltage battery if the vehicle is idle for lengthy periods

- Park up the vehicle with the high-voltage battery at a charge level between 30% and 50%.
- Do not keep the high-voltage battery continuously connected to power supply equipment.
- Check the charge level of the high-voltage battery every two to three months.
  If the 12 V power supply is switched on, you can check the charge level of the high-voltage battery with the on-board computer.
- If the charge level is insufficient, recharge the high-voltage battery (→ page 136).

ⓘ The on-board computer displays the charge level of the high-voltage battery in the instrument cluster display (→ page 171).

Driving and driving safety systems

Notes on driving systems and your responsibility

Your vehicle is equipped with driving systems which assist you in driving, parking and manoeuvring the vehicle. The driving systems are only aids. They are not a substitute for you paying attention to your surroundings and do not relieve you of your responsibility pertaining to road traffic law. The driver is always responsible for maintaining a safe distance to the vehicle in front, for vehicle speed, for braking in good time and for staying in lane. Pay attention to the traffic conditions at all times and intervene when necessary. Be aware of the limitations regarding the safe use of these systems.

Driving systems can neither reduce the risk of accident if you fail to adapt your driving style nor override the laws of physics. They cannot always take into account road, weather or traffic conditions.

ⓘ Some driving systems can regulate or limit the speed to a previously set value. Draw attention to the stored speed when changing drivers.

Information on vehicle sensors and cameras

Some driving and driving safety systems use cameras as well as radar or ultrasonic sensors to monitor the area in front of, behind or next to the vehicle.

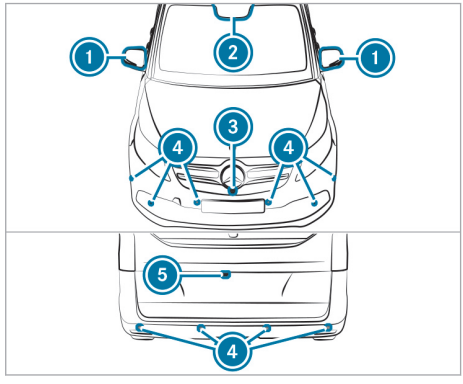

1. Cameras in the outside mirrors
2. Multifunction camera
3. Front camera
4. Ultrasonic sensors
5. Reversing camera

ⓘ Depending on the vehicle's equipment, the radar sensors are integrated on the side of the rear bumpers and/or behind the Mercedes star in the radiator grille.

⚠ **WARNING** Risk of accident due to restricted detection performance of vehicle sensors and cameras

If the area around vehicle sensors or cameras is covered, damaged or dirty, certain driving and safety systems cannot function correctly. There is a risk of an accident.

- Keep the area around vehicle sensors or cameras clear of any obstructions and clean.
- Have damage to the bumper, radiator grille or stone chipping in the area of the front and rear windows repaired at a qualified specialist workshop.

Keep the areas around the sensors and cameras free of dirt, ice or slush (→ page 219). The sensors and cameras must not be covered and the detection ranges around them must be kept free. Do not attach additional licence plate brackets, advertisements, stickers, foils or foils to protect against stone chippings in the detection range of the sensors and cameras. Make sure that there are no overhanging loads protruding into the detection range.

In the event of damage, or following a severe impact, have the function of the sensors checked

at a qualified specialist workshop. Have damage or stone chipping in the area of the cameras repaired at a qualified specialist workshop.

Overview of driving systems and driving safety systems

In this section, you will find information about the following driving systems and driving safety systems:

- ABS (Anti-lock Braking System) (→ page 148)
- BAS (Brake Assist System) (→ page 148)
- ESP® (Electronic Stability Program) (→ page 148)
- EBD (Electronic Brakeforce Distribution) (→ page 149)
- Active Brake Assist (→ page 149)
- Adaptive brake lights (→ page 151)
- Cruise control (→ page 151) and limiter (→ page 151)
- Active Distance Assist DISTRONIC (→ page 153)
- Hill start assist (→ page 156)
- HOLD function (→ page 156)
- Parking Assist PARKTRONIC (→ page 157)
- Reversing camera (→ page 158)
- 360° Camera (→ page 159)
- Active Parking Assist (→ page 161)
- ATTENTION ASSIST (→ page 164)
- Traffic Sign Assist (→ page 165)
- Blind Spot Assist (→ page 166)
- Lane Keeping Assist (→ page 167)

Function of ABS (Anti-lock Braking System)

ABS controls the brake pressure in critical situations:

- During braking, for instance, at maximum full-stop braking or if there is insufficient tyre traction, the wheels are prevented from locking.
- The steerability of the vehicle in terms of physical possibilities is ensured when braking.

If ABS intervenes, you will feel pulsations in the brake pedal. The pulsating brake pedal may be an indication of hazardous road conditions and functions as a reminder to take extra care while driving.

Function of BAS (Brake Assist System)

BAS supports you with additional braking force in an emergency braking situation.

If you depress the brake pedal quickly, BAS is activated:

- BAS automatically boosts the braking force of the brakes
- BAS can shorten the braking distance
- ABS prevents the wheels from locking

When you release the brake pedal, the brakes function as usual again. BAS is deactivated.

Function of ESP® (Electronic Stability Program)

⚠ **WARNING** Risk of skidding if ESP® is deactivated

If you deactivate ESP®, ESP® cannot carry out vehicle stabilisation.

▶ ESP® should only be deactivated in the following situations.

ESP® can, within physical limits, monitor and improve driving stability and traction in the following situations:

- when driving and pulling away on wet or slippery road surfaces
- when braking

If the vehicle is deviating from the direction desired by the driver, ESP® can stabilise the vehicle by performing the following actions:

- one or more wheels are braked
- the drive system performance is adapted depending on the situation

ⓘ Only use wheels with the recommended tyre sizes. Only then will ESP® function properly.

If the [ ] warning lamp flashes in the instrument cluster, then one or more wheels have reached their traction limit:

- adapt your driving style to suit the prevailing road and weather conditions
- do not deactivate ESP® under any circumstances
- only depress the accelerator pedal as far as is necessary when pulling away

Deactivate ESP® in the following situations to improve traction:

- when using snow chains
- in deep snow
- on sand or gravel

ⓘ Spinning the wheels results in a cutting action, which enhances traction.

If the [ESP] warning lamp lights up continuously, ESP® is not available due to a malfunction.

Observe the information on warning lamps and display messages (→ page 275).

When ESP® is deactivated, the [ESP OFF] warning lamp in the instrument cluster lights up continuously.

Observe the following points when ESP® is deactivated:

- vehicle stabilisation is delayed and is significantly reduced in the lower speed range
- the drive wheels may start to spin
- traction control is still active

ⓘ If ESP® is deactivated, ESP® will still support you when braking.

Deactivating or activating ESP®

On-board computer:

→ [⌂] ▸▸ Settings ▸▸ Assistance ▸▸ ESP

▶ **To deactivate/activate:** press the [OK] button. If ESP® is deactivated, the [ESP OFF] warning lamp in the instrument cluster lights up.

ⓘ Observe the information on warning lamps and display messages (→ page 275).

Function of ESP® Crosswind Assist

ESP® Crosswind Assist detects sudden gusts of side wind and helps the driver to keep the vehicle in the lane:

- ESP® Crosswind Assist is active at vehicle speeds above approx. 80 km/h when driving straight ahead or cornering slightly.
- The vehicle is stabilised by means of individual brake application on one side. The instrument cluster displays a message with the traffic sign for a strong crosswind.

ESP® Crosswind Assist does not react under the following conditions:

- The vehicle is subjected to severe jolts and vibrations, e.g. as a result of uneven surfaces or potholes.
- The vehicle loses traction, e.g. on snow or ice or when aquaplaning.

Function of EBD (Electronic Brakeforce Distribution)

EBD has the following characteristics:

- monitoring and controlling the braking force on the rear wheels
- improving driving stabilisation when braking, especially on bends

Function of Active Brake Assist

Active Brake Assist consists of the following functions:

- Distance warning function
- Autonomous braking function
- Situation-dependent brake force boosting

Active Brake Assist can help you to minimise the risk of a collision with vehicles, cyclists or pedestrians, or reduce the effects of such a collision.

If Active Brake Assist has detected a risk of collision, a warning tone sounds and the [⚠] warning lamp lights up in the instrument cluster.

If you do not react to the warning, autonomous braking can be initiated in critical situations. In especially critical situations, Active Brake Assist can initiate autonomous braking directly. In this case, the warning lamp and warning tone are activated simultaneously with the braking application.

If you apply the brake yourself in a situation detected as critical by Active Brake Assist, or apply the brake during autonomous braking, situation-dependent brake force boosting occurs. The brake pressure increases up to maximum full-stop braking if necessary.

If autonomous braking or a situation-dependent braking boosting effect has occurred, the [⚠] warning lamp flashes briefly and then goes out.

Vehicles with PRE-SAFE®: if the autonomous braking function or the situation-dependent brake force boosting is triggered, additional preventive measures for occupant protection (PRE-SAFE) may also be initiated (→ page 37).

⚠ **WARNING** Risk of an accident caused by limited detection performance of Active Brake Assist

Active Brake Assist cannot always clearly identify objects and complex traffic situations.

In such cases, Active Brake Assist might:

- Give a warning or brake without reason
- Not give a warning or not brake

Active Brake Assist is only an aid. The driver is responsible for maintaining a sufficiently safe distance to the vehicle in front, vehicle speed and for braking in good time.

▶ Always pay careful attention to the traffic situation; do not rely on Active Brake Assist alone.

▶ Be prepared to brake or swerve if necessary.

Observe the system limitations of Active Brake Assist. Due to the nature of the system, complex but non-critical driving conditions may also cause Active Brake Assist to intervene during braking.

The individual subfunctions are available in the following speed ranges:
Distance warning function

The distance warning function warns you in the following situations:

- From approximately 30 km/h, if over several seconds the distance to the vehicle travelling in front is too near for the driven speed, the warning lamp lights up in the instrument cluster.
- From approximately 7 km/h, if your vehicle is critically close to a vehicle or pedestrian, an intermittent warning tone sounds and the warning lamp lights up in the instrument cluster.

Brake immediately or take evasive action, provided it is safe to do so and the traffic situation allows this.

The distance warning function can aid you in the following situations with an intermittent warning tone and a warning lamp:

- **Vehicles travelling in front:** up to approximately 250 km/h
- **Stationary vehicles:** up to approximately 80 km/h
- **Crossing vehicles:** no reaction
- **Moving pedestrians/cyclists ahead:** up to approximately 80 km/h
- **Crossing cyclists:** up to approximately 60 km/h
- **Stationary pedestrians:** no reaction

Autonomous braking function

The autonomous braking function may intervene at speeds starting from approx. 7 km/h in the following situations:

- **Vehicles travelling in front:** up to approximately 200 km/h
- **Stationary vehicles:** up to approximately 50 km/h
- **Crossing vehicles:** no reaction
- **Cyclists ahead:** up to approximately 80 km/h
- **Moving pedestrians/crossing cyclists:** up to approximately 60 km/h
- **Stationary pedestrians:** no reaction

Situation-dependent brake force boosting

Situation-dependent brake force boosting may intervene at speeds starting from approximately 7 km/h in the following situations:

- **Vehicles travelling in front:** up to approximately 250 km/h
- **Stationary vehicles:** up to approximately 80 km/h
- **Crossing vehicles:** no reaction
- **Cyclists ahead:** up to approximately 80 km/h
- **Moving pedestrians/crossing cyclists:** up to approximately 60 km/h
- **Stationary pedestrians:** no reaction

Cancelling a brake application of Active Brake Assist

You can cancel a brake application of Active Brake Assist at any time by:

- Fully depressing the accelerator pedal or with kickdown.
- Releasing the brake pedal.

Active Brake Assist may cancel the brake application when one of the following conditions is fulfilled:

- You manoeuvre to avoid the obstacle.
- There is no longer a risk of collision.
- An obstacle is no longer detected in front of your vehicle.

System limits

Full system performance is not yet available for a few seconds after switching on the vehicle or after driving off.

The system may be impaired or may not function in the following situations:

- In snow, rain, fog or heavy spray.
- If the sensors are dirty, misted up, damaged or covered.
- If the sensors are impaired due to interference from other radar sources, e.g. strong radar reflections in multi-storey car parks.
- If a loss of tyre pressure or a defective tyre has been detected and displayed.
- In complex traffic situations where objects cannot always be clearly identified.
- If pedestrians or vehicles move quickly into the sensor detection range.
- If pedestrians are hidden by other objects.
- If the typical outline of a pedestrian cannot be distinguished from the background.
- If a pedestrian is not detected as such, e.g. due to special clothing or other objects.
- In bends with a narrow radius.

Activating or deactivating Active Brake Assist

On-board computer:

→ [⌂] ▸▸ Settings ▸▸ Assistance ▸▸ Active Brake Assist

ⓘ It is recommended that Active Brake Assist is always left activated.

▶ **To activate/deactivate:** press the [OK] button. The distance warning function and the autonomous braking function of Active Brake Assist are deactivated or activated.

When the functions are deactivated, the [OFF] symbol appears in the assistance graphic in the instrument cluster display.

The next time the vehicle is started, Active Brake Assist is automatically activated.

Function of Adaptive Brake Lights

Adaptive Brake Lights warn following traffic in an emergency braking situation with the following signals:

- By flashing the brake lamps
- By activating the hazard warning lights

If the vehicle is braked sharply from speeds above 50 km/h, the brake lamps flash rapidly. This provides traffic travelling behind you with an even more noticeable warning.

If the vehicle is travelling at speeds of more than 70 km/h at the beginning of the brake application, the hazard warning lights switch on once the vehicle is stationary. When pulling away again, the hazard warning lights switch off automatically at approx. 10 km/h.

You can also switch off the hazard warning lights using the hazard warning button (→ page 103).

Cruise control and limiter

Function of cruise control

Cruise control accelerates and brakes the vehicle automatically in order to maintain a previously stored speed.

If you accelerate to overtake, forexample, the stored speed is not deleted. If you remove your foot from the accelerator pedal after overtaking, cruise control will resume speed regulation back to the stored speed.

You operate cruise control using the cruise control lever. You can store any speed above 20 km/h.

Observe the notes on driving systems and your responsibility; you may otherwise fail to recognise dangers (→ page 147).

System limits

Cruise control may be unable to maintain the stored speed on uphill gradients. The stored speed is resumed if the uphill gradient evens out and the vehicle's speed does not fall below 20 km/h.

Do not use cruise control in the following situations:

- in traffic situations which require frequent changes of speed, e.g. in heavy traffic, on winding roads
- off-road or on construction sites
- on slippery or slick roads, as the drive wheels can lose traction when accelerating and the vehicle can then skid
- if there is poor visibility

Function of the limiter

The limiter restricts the speed of the vehicle. To adjust to the set speed quickly, the limiter applies the brakes automatically.

You can operate the variable limiter with the cruise control lever. You can store any speed above

20 km/h. You can also perform settings while the vehicle is stationary if the vehicle has been started.

Observe the notes on driving systems and your responsibility. You may otherwise fail to recognise dangers (→ page 147).

Kickdown

If you depress the accelerator pedal beyond the pressure point (kickdown), the limiter switches to passive mode.

The instrument cluster display shows the Limiter passive message and you are able to exceed the stored speed.

After completion of kickdown, the variable limiter is activated again in the following situations:

- If the driven speed drops below the stored speed.
- If the stored speed is called up.
- If you store a new speed.

Operating cruise control or the variable limiter

Requirements:

Cruise control

- Cruise control is selected.
- The parking brake has been released.
- ESP® is activated, but may not intervene.
- The driving speed is at least 20 km/h.
- The brake pedal is not depressed.

Variable limiter

- The vehicle has been started.
- The variable limiter is selected.

Switching between cruise control and the variable limiter

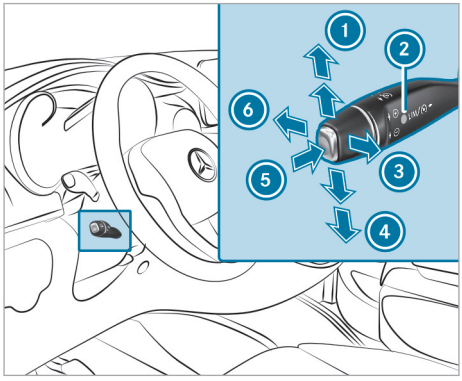

▶ Press the 5 button.
- LIM indicator lamp 2 off: cruise control is selected.
- LIM indicator lamp 2 lit: the variable limiter is selected.

Storing and maintaining the current speed

▶ Briefly press the cruise control lever up 1 or down 4.
The current speed is stored and the vehicle maintains this speed (cruise control) or does not exceed it (variable limiter).

When you activate cruise control, the stored speed is briefly shown in the text field of the instrument cluster display. The display also shows the [ ] symbol and the stored speed.

When you activate the variable limiter, the instrument cluster display briefly shows the stored speed. The display also shows the [LIM] symbol and the stored speed.

ⓘ For vehicles with Active Distance Assist DISTRONIC, the segments between the start of the scale and the stored speed light up in the speedometer dial instead.

Calling up the stored speed

⚠ **WARNING** Risk of accident due to stored speed

If you call up the stored speed and this is lower than your current speed, the vehicle decelerates.

▶ Take into account the traffic situation before calling up the stored speed.

▶ Briefly pull the cruise control lever in direction 3.
The last stored speed is called up and the vehicle maintains this speed (cruise control) or does not exceed it (variable limiter).

If the last stored speed has previously been deleted, the currently driven speed is stored.

ⓘ When you switch off the vehicle, the last speed stored is cleared.

Increasing or reducing the speed

▶ Press the cruise control lever up 1 or down 4 as far as the 1st pressure point.
The stored speed is increased or reduced by 1 km/h.

or

▶ Press the cruise control lever up ① or down ④ beyond the 1st pressure point.
The stored speed is increased or reduced by 10 km/h.

If you have set Miles as the unit for the digital speedometer, you can maintain any speed from 20 mph (cruise control) or set it as the limit speed (variable limiter). You can then set the limit speed in increments of 1 mph and 5 mph.

Deactivating cruise control or the variable limiter

▶ Briefly press the cruise control lever forwards ⑥.

or

▶ Press the ⑤ button.
The [⊘] or [LIM] symbol and the stored speed in the instrument cluster display then go out.

ⓘ Cruise control is deactivated in the following situations:

- you apply the brakes.
- you drive below a speed of 20 km/h.
- you shift the transmission to position [N].
- ESP® intervenes.

In these cases the variable limiter remains activated.
If you deactivate ESP®, or ABS or ESP® is malfunctioning, cruise control and the limiter are deactivated.

If cruise control automatically deactivates, a warning tone sounds and the Cruise control off message appears briefly in the instrument cluster display.

Active Distance Assist DISTRONIC

Function of Active Distance Assist DISTRONIC

Active Distance Assist DISTRONIC maintains the set speed on free-flowing roads. If vehicles are detected ahead, the set distance is maintained, if necessary until the vehicle comes to a standstill. The vehicle – accelerates or brakes, depending on the distance to the vehicle in front and the – set speed. The speed and distance to the vehicle in front are set and saved using the cruise control lever. The speed can be set in the range between 20 km/h and 200 km/h.

Other features of Active Distance Assist DISTRONIC:

- Depending on the preselected distance, DISTRONIC intervenes either dynamically (short distance) or to save energy (long distance).
- Depending on the vehicle mass detected, the dynamics of the DISTRONIC intervention are reduced.
- Acceleration to the stored speed is initiated if the turn signal indicator is switched on to change to the overtaking lane.

Observe the notes on driving systems and your responsibility; you may otherwise fail to recognise dangers (→ page 147).

System limits

The system may be impaired or inoperative in the following situations, forexample:

- in snow, rain, fog or heavy spray
- if there is dirt on the radar sensors or they are covered
- if there is interference from radar sources or strong radar reflections, forexample in multistorey car parks
- in traffic situations where frequent speed changes are required, e.g. in heavy traffic or on winding roads or off-road
- on roads with steep downhill or uphill gradients
- on winding roads

The system cannot detect stationary objects unless these were previously detected as moving.

In addition, on slippery or slick roads, braking or accelerating can cause one or several of the drive wheels to lose traction and the vehicle can then skid.

Do not use Active Distance Assist DISTRONIC in these situations.

⚠ **WARNING** Risk of accident from acceleration or braking by Active Distance Assist DISTRONIC

Active Distance Assist DISTRONIC may accelerate or brake in the following cases, for example:

- If the vehicle pulls away using Active Distance Assist DISTRONIC.
- If the stored speed is called up and is considerably faster or slower than the currently driven speed.
- If Active Distance Assist DISTRONIC no longer detects a vehicle in front or does not react to relevant objects.

- Always carefully observe the traffic conditions and be ready to brake at all times.
- Take into account the traffic situation before calling up the stored speed.

WARNING Risk of accident due to insufficient deceleration by Active Distance Assist DISTRONIC

Active Distance Assist DISTRONIC brakes your vehicle with up to 50% of the possible deceleration. If this deceleration is not sufficient, Active Distance Assist DISTRONIC alerts you with a visual and acoustic warning.

- Adjust your speed and maintain a suitable distance from the vehicle in front.
- Brake the vehicle yourself and/or take evasive action.

WARNING Risk of accident if detection function of Active Distance Assist DISTRONIC is impaired

Active Distance Assist DISTRONIC does not react or has a limited reaction:

- when driving on a different lane or when changing lanes
- to pedestrians, animals, bicycles or stationary vehicles, or unexpected obstacles
- to complex traffic conditions
- to oncoming vehicles and crossing traffic

As a result, Active Distance Assist DISTRONIC may neither give warnings nor intervene in such situations.

- Always observe the traffic conditions carefully and react accordingly.

Active Distance Assist DISTRONIC may not detect narrow vehicles driving in front, e.g.motorcycles or vehicles not travelling in line with your vehicle.
If the following requirements for activation are no longer fulfilled or the system is malfunctioning, Active Distance Assist DISTRONIC is automatically deactivated. If the vehicle is stationary or is moving very slowly during automatic deactivation, the transmission automatically shifts to park position P.

Operating Active Distance Assist DISTRONIC

Requirements

- The vehicle has been started. It may take up to two minutes of driving before Active Distance Assist DISTRONIC is ready for use.
- The parking brake has been released.
- ESP® is activated and is not intervening.
- Active Parking Assist is not active.
- The transmission is in position D.
- The doors and tailgate are closed.
- The driver's seat belt is fastened.

Switches between the variable limiter and Active Distance Assist DISTRONIC

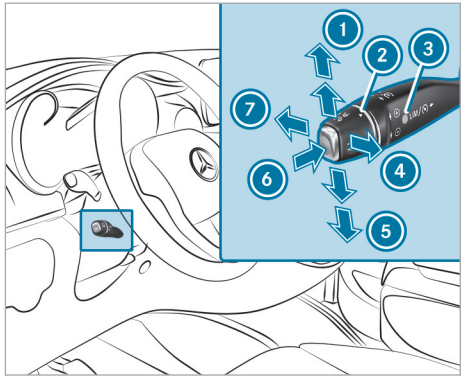

- Press the button 6.
  - LIM indicator lamp 3 off: Active Distance Assist DISTRONIC is selected.
  - LIM indicator lamp 3 is on: the variable limiter is selected.

Activating Active Distance Assist DISTRONIC

- **To activate with the current speed:** briefly press the cruise control lever briefly up 1 or down 5 and take your foot off the accelerator pedal.
  The current speed is stored and shown on the speedometer. The instrument cluster display briefly shows the set specified distance and the stored speed.

or

- **To activate with the stored speed:** pull the cruise control lever briefly in the direction 4 and take your foot off the accelerator pedal.
  The speed is displayed on the speedometer. The instrument cluster display briefly shows

the set specified distance and the stored speed.

ⓘ Vehicles with Traffic Sign Assist: the speed detected by Traffic Sign Assist can be set by pulling the lever in the direction ④ (→ page 165).

ⓘ Information on DISTRONIC displays (→ page 156).

If you do not fully release the accelerator pedal, the Active Distance Assist suspended message appears on the instrument cluster display. The distance to a slower-moving vehicle in front will then not be set. The position of the accelerator pedal will determine the speed.

Active Distance Assist DISTRONIC adopts the current speed when you pull the cruise control lever in direction ④ for the first time after starting the vehicle. If the current speed is less than 20 km/h, Active Distance Assist DISTRONIC adopts the speed of 20 km/h.

Pulling away again with Active Distance Assist DISTRONIC

▶ Remove your foot from the brake pedal.
▶ Briefly pull the cruise control lever in the direction ④.

or

▶ Depress the accelerator pedal briefly with force.
The functions of Active Distance Assist DISTRONIC continue to be carried out.

Deactivating Active Distance Assist DISTRONIC

⚠ **WARNING** Risk of an accident due to Active Distance Assist DISTRONIC being active when you leave the driver's seat

If you leave the driver's seat while the vehicle is being braked by Active Distance Assist DISTRONIC only, the vehicle can roll away.

▶ Always deactivate Active Distance Assist DISTRONIC and secure the vehicle to prevent it from rolling away before you leave the driver's seat.

▶ Briefly push the cruise control lever forwards ⑦.

or

▶ Brake if the vehicle is moving.

or

▶ Press the button ⑥.
The variable limiter is selected. LIM indicator lamp ③ in the cruise control lever lights up.

Increasing or reducing the speed

▶ Press the cruise control lever up ① or down ⑤ as far as the first pressure point.
The stored speed is increased or reduced by 1 km/h.

or

▶ Press the cruise control lever up ① or down ⑤ beyond the first pressure point.
The stored speed is increased or reduced by 10 km/h.

Reducing or increasing the specified distance from the vehicle in front

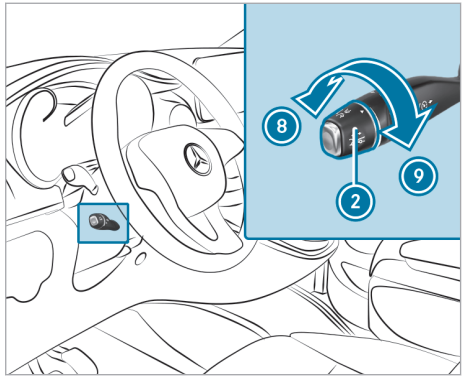

▶ Turn controller ② in direction ⑨ to increase the specified minimum distance and in direction ⑧ to reduce the specified minimum distance.
The instrument cluster display briefly shows the set specified distance.

ⓘ Information on DISTRONIC displays (→ page 156).

Displays of Active Distance Assist DISTRONIC

Assistant display

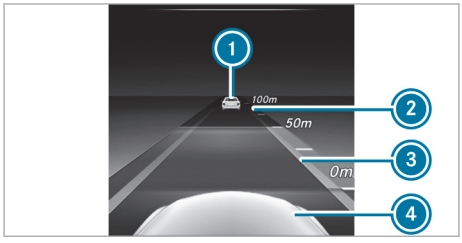

1. Vehicle in front, if detected
2. Distance indicator
3. Set specified distance
4. Own vehicle

ⓘ Information about the Assistance graphic (→ page 173) menu.

If you set the speed, the assistance graphic briefly appears in the instrument cluster display.

Displays on the speedometer

When Active Distance Assist DISTRONIC is activated, one or two indicator segments light up in the stored speed range of the speedometer.

If Active Distance Assist DISTRONIC detects a vehicle in front, the indicator segments, located between the speed of the vehicle in front and the stored speed, light up.

Information on Hill Start Assist

Hill Start Assist holds the vehicle for a short time when pulling away on a hill under the following conditions:

- The transmission is in position D or R.
- The parking brake has been released.

This gives you enough time to move your foot from the brake pedal to the accelerator pedal and depress it before the vehicle begins to roll.

⚠ **WARNING** Risk of accident and injury due to the vehicle rolling away

After a short time, Hill Start Assist no longer holds the vehicle.

▶ Swiftly move your foot from the brake pedal to the accelerator pedal. Do not leave the vehicle when it is being held by Hill Start Assist.

HOLD function

HOLD function

The HOLD function holds the vehicle at a standstill without requiring you to depress the brake pedal, e.g. when pulling away on steep slopes or when waiting in traffic. When you depress the accelerator pedal to pull away, the braking effect is cancelled and the HOLD function is deactivated.

The HOLD function is only an aid. The responsibility for the vehicle safely standing still remains with the driver.

System limits

The HOLD function is only intended to provide assistance when driving and is not a sufficient means of safeguarding the vehicle against rolling away when stationary.

- The incline must not be greater than 30%.

Activating or deactivating the HOLD function

Requirements:

- The vehicle has been started.
- All the doors and the tailgate are closed and the seatbelt is fastened.
- The parking brake has been released.
- The selector lever is in the D, R or N position.
- Active Distance Assist DISTRONIC is deactivated.

Activating the HOLD function

⚠ **WARNING** Risk of an accident due to the HOLD function being active when you leave the vehicle

If the vehicle is only braked with the HOLD function it could, in the following situations, roll away:

- If there is a malfunction in the system or in the power supply.
- If the HOLD function is deactivated by depressing the accelerator pedal or brake pedal, e.g. by a vehicle occupant.

▶ Always secure the vehicle against rolling away before you leave it.

▶ Depress the brake pedal until the HOLD display appears in the instrument cluster display. The HOLD function is activated. You can release the brake pedal.

ⓘ If depressing the brake pedal the first time does not activate the HOLD function, wait briefly and then try again.

Deactivating the HOLD function

▶ Depress the accelerator pedal to pull away.

or

▶ Depress the brake pedal until the HOLD display in the instrument cluster disappears from the driver's display.

The HOLD function is deactivated in the following situations:

- Active Distance Assist DISTRONIC is activated.
- The transmission is shifted to position P.
- The vehicle is secured with the electric parking brake.

In the following situations, the vehicle is held by transmission position P and/or by the electric parking brake:

- The driver's side seat belt is not fastened, or a door or the tailgate is open.

PARKTRONIC

Function of PARKTRONIC

PARKTRONIC is an electronic parking assistance system with ultrasonic sensors. The system monitors the area around your vehicle using sensors on the front bumper and on the rear bumper. PARKTRONIC indicates the distance between your vehicle and an object both visually and acoustically.

The warning ranges in front of and behind the vehicle are indicated by different warning tones.

PARKTRONIC is only an aid. It is not a substitute for you paying attention to the surroundings. You are always responsible for safe manoeuvring, parking and exiting a parking space. Make sure that there are no persons, animals or objects etc. in the manoeuvring area while manoeuvring, parking or exiting a parking space.

Requirements for automatic activation:

- The vehicle is switched on.
- The parking brake has been released.

The selected transmission position determines whether the front and/or rear area is monitored.

Front area only:

- Transmission position D

Front and rear area:

- Transmission position R
- Transmission position N

Regardless of the transmission position, PARKTRONIC automatically monitors the area behind the vehicle if the vehicle begins to roll backwards, e.g. after stopping on an uphill gradient.

PARKTRONIC is deactivated at speeds above 18 km/h. PARKTRONIC is reactivated at speeds below 16 km/h.

Warning displays

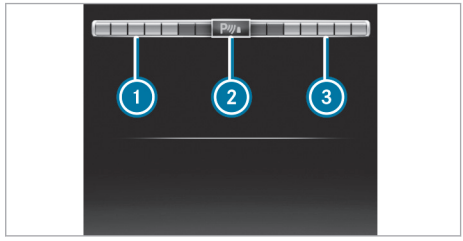

Front zone warning displays in the display of the instrument cluster

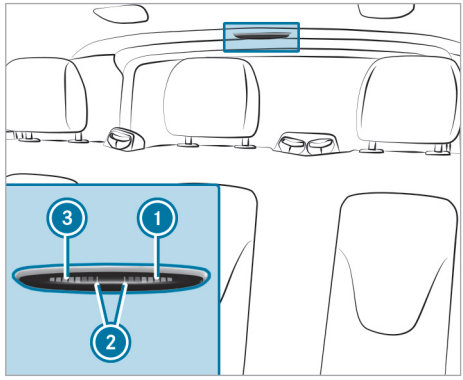

Rear area warning display in the rear at the centre of the roof lining

1. Warning segments for the left side of the vehicle
2. Measurement readiness indicator
3. Warning segments for the right side of the vehicle

At least one segment will light up as the vehicle approaches an obstacle, depending on the vehicle's distance from the obstacle.

In addition, warning tones are emitted. When the distance to the obstacle is sufficient, you will hear an intermittent warning tone. The shorter the distance to the obstacle, the shorter the frequency of the intermittent warning tones becomes. When the minimum distance is reached, you hear a continuous warning tone.

The warning display for each side of the vehicle is divided into five yellow and two red segments. PARKTRONIC is active if measurement readiness indicator ② lights up.

System limits

PARKTRONIC may not take the following obstacles into account:

- obstacles below the detection range, e.g. persons, animals or objects
- obstacles above the detection range, e.g. protruding loads, overhangs or loading ramps of lorries

The sensors must be free of dirt, ice and slush. If not, they may be inoperative or their function may be impaired. Clean the sensors regularly, taking care not to scratch or damage them (→ page 219).

Problems with PARKTRONIC

There is a fault if only the red segments of the warning display light up. In addition, a warning tone sounds for approximately two seconds. If problems persist, have PARKTRONIC checked at a qualified specialist workshop.

If the warning indicators are displaying implausible distances, it may be caused by one of the following issues:

- **The sensors are dirty:** clean the sensors. Observe the notes on care of vehicle parts (→ page 219).
- **Licence plates or other detachable parts in the vicinity of the sensors are not correctly fastened:** check the licence plate or the detachable parts for correct fit.
- **Interference from another source of radio or ultrasound waves:** check the function of PARKTRONIC at another location.

Deactivating/activating PARKTRONIC

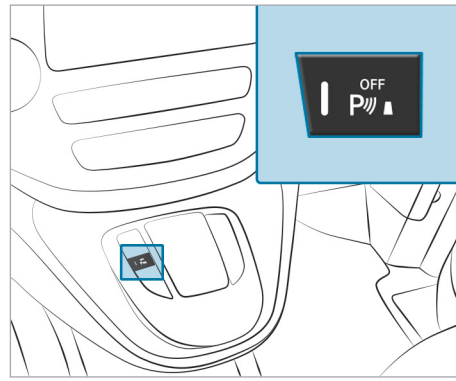

▶ Press the [P OFF] button.
If PARKTRONIC is deactivated, the indicator lamp of the [P OFF] button lights up.

Reversing camera

Function of the reversing camera

The reversing camera is located next to the tailgate handle and is protected from raindrops and dust by means of a flap. When the reversing camera is activated, this flap opens (→ page 147).

The flap closes again when you have ended the manoeuvring process or you switch the vehicle off.

For technical reasons, the flap may remain open briefly after the reversing camera has been deactivated.

You can activate the automatic display function of the reversing camera in the multimedia system (→ page 161). When you engage reverse gear, the image from the reversing camera is shown automatically in the media display. Dynamic guide lines show the path the vehicle will take for the current steering movement. This helps you to orient yourself and to avoid obstacles when reversing.

The reversing camera is only an aid. It is not a substitute for your attention to the surroundings. The responsibility for safe manoeuvring and parking remains with you. Make sure that there are no persons, animals or objects etc., in the manoeuvring area while manoeuvring and parking.

You can use the softkeys located below or to the side to choose between the following views:

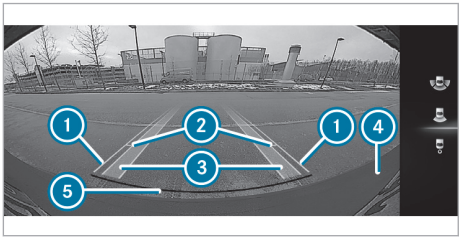

Normal view

1. Yellow guide line, vehicle width (driven surface) depending on the current steering angle (dynamic)
2. Yellow guide line at a distance of approximately 1.0 m from the rear area
3. Yellow lanes marking the course the tyres will take with the current steering angle (dynamic)
4. Bumper
5. Red guide line at a distance of approximately 0.3 m from the rear area

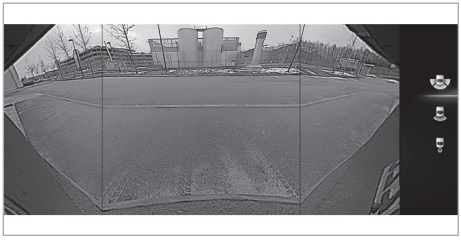

Wide-angle view

Observe the notes on cleaning and care of the reversing camera (→ page 219).

The reversing camera may show a distorted view of obstacles, show them incorrectly or not at all. The reversing camera cannot show all objects which are very near to or under the rear bumper. It will not warn you of a collision, people or objects.

The area behind the vehicle is displayed as a mirror image, as in the inside rear view mirror.

When you shift out of reverse gear, the dynamic guide lines are faded out. The reversing camera switches off automatically when you drive faster than approx. 16 km/h .

System limits

The reversing camera will not function or will only partially function in the following situations:

- The tailgate is open.
- There is heavy rain, snow or fog.
- The light conditions are poor, e.g. at night.
- if the camera lens is covered, dirty or misted up.
- Cameras, or vehicle components in which the cameras are fitted, are damaged. Have the cameras, their positions and their setting checked at a qualified specialist workshop.

ⓘ The media display contrast may be impaired due to direct sunlight or other light sources. In this case, pay particular attention.

ⓘ Have the media display repaired or replaced if, forexample, pixel errors considerably restrict its use.

ⓘ Objects that are not at ground level appear further away than they actually are. This includes, forexample:

- the bumper of a vehicle parked behind
- the tail-end of a lorry
- slanted posts

Only use the guide lines of the camera image for orientation. Do not travel further than the lowest horizontal guide line when approaching objects. You may otherwise damage your vehicle and/or the object.

Opening the camera cover of the reversing camera

Multimedia system:

→ [⌂] ▸▸ Settings ▸▸ Vehicle ▸▸ Rear view camera

▶ Select Open camera cover.

ⓘ The camera cover closes automatically after a while or when the vehicle is switched off with the cover open.

360° Camera

Function of the 360° Camera

The system consists of four cameras. The cameras cover the immediate vehicle surroundings. The system assists you, forexample, when parking or at exits with reduced visibility.

The 360° Camera is only an aid. It is not a substitute for you paying attention to the surroundings. You are always responsible for safe manoeuvring and parking. Make sure that there are no persons, animals or objects etc. in the manoeuvring area while manoeuvring and parking in parking spaces.

The system evaluates images from the following cameras:

- Reversing camera
- Front camera
- Two side cameras in the outside mirrors

Views of the 360° Camera

You can use the softkeys located below or to the side to choose between the following views:

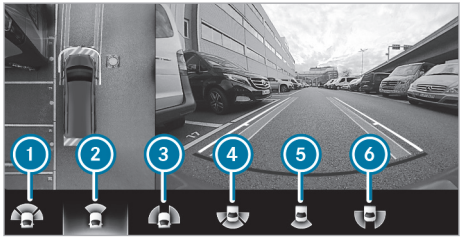

View with softkeys located at the bottom

1. Wide-angle view, front
2. Top view with image from the front camera
3. Top view with the image from the forward-facing side cameras (front wheel view)
4. Wide-angle view, rear
5. Top view with image from the reversing camera
6. Top view with the image from the rearward-facing side cameras (rear wheel view)

Top view

1. Path indicating the route the vehicle will take with the steering wheel in its current position
2. Warning display of Parking Assist PARKTRONIC
3. Your vehicle from above

The colour of the individual segments of warning display 2 is based on the distance to the detected obstacle:

- **Yellow segments:** obstacles at a distance between approx. 0.4 m and 1.0 m
- **Red segments:** obstacles at a very short distance of approx. 0.3 m or less

When Parking Assist PARKTRONIC is operational and no object is detected, the segments of the currently active side are indicated using thin, yellow lines.

Guide lines

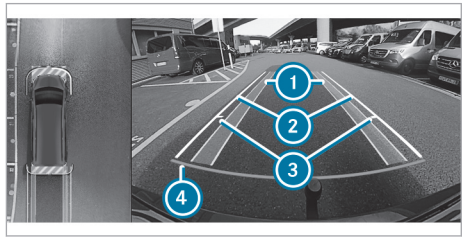

1. Yellow path marking the course the tyres will take at the current steering position (dynamic)
2. Yellow guide line, vehicle width (driven surface) depending on the current steering angle (dynamic)
3. Mark at a distance of approx. 1.0 m
4. Red guide line at a distance of approximately 0.3 m from the rear area

ⓘ The guide lines in the media display show the distances to your vehicle. The distances apply at road level.

Side camera views

The front or rear sides of the vehicle can be seen in these views.

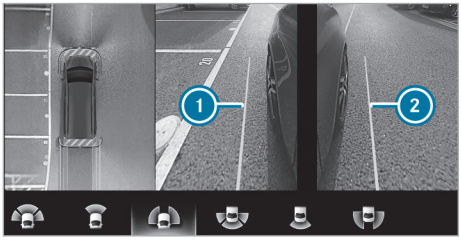

Example: forward-facing side cameras (front wheel view)

1. Guide line of external vehicle dimensions with outside mirrors folded out (left side of the vehicle)
2. Guide line of external vehicle dimensions with outside mirrors folded out (right side of the vehicle)

System limits

The 360° Camera will not function or will only partially function in the following situations:

- If the doors or tailgate are open.
- If the outside mirrors are folded in.
- If there is heavy rain, snow or fog.
- If the light conditions are poor, e.g. at night.
- If the cameras are exposed to very bright light, white lines may appear on the camera image.
- If the camera lens is covered, dirty or misted up.
- If cameras, or vehicle components in which the cameras are fitted, are damaged. Have the cameras, their positions and their setting checked at a qualified specialist workshop.

ⓘ Do not use the 360° Camera under such circumstances. If you do, you could injure others or collide with objects when parking the vehicle.

ⓘ Have the media display repaired or replaced if, forexample, pixel errors significantly restrict its use.

See the notes on cleaning the 360° Camera (→ page 219).

Switching the 360° Camera on or off

Requirements:

- The vehicle is switched on.
- The multimedia system is activated.
- You are driving at moderate speeds.

Switching on

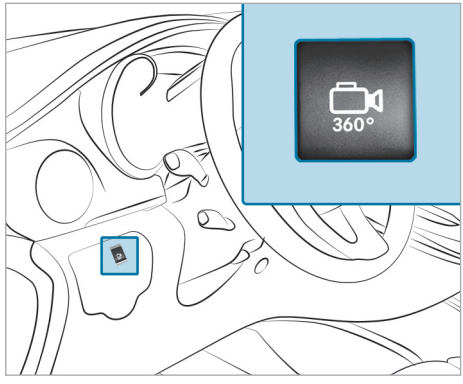

▶ Press button [360°] .

or

▶ If the automatic camera view function is activated in the multimedia system, engage reverse gear (→ page 161).

▶ Select the appropriate view using the displayed softkeys (→ page 159).

Switching off

▶ Press button [360°] .

or

▶ Drive forwards at a speed above 16 km/h.

or

▶ Shift the transmission to position [P].

Activating/deactivating automatic operation of the reversing camera

The reversing camera is only an aid. It is not a substitute for your attention to your surroundings. The responsibility for safe manoeuvring and parking remains with you. Make sure that no persons, animals or objects etc. are in the manoeuvring range. Pay attention to your surroundings and be ready to brake at all times.

Multimedia system:

→ [⌂] ▸▸ Settings ▸▸ Assistance ▸▸ Camera & parking

▶ Activate or deactivate Auto reversing camera.

Active Parking Assist

Function of Active Parking Assist

Active Parking Assist is an electronic parking assistance system which automatically locates and measures parking spaces on both sides of the

vehicle when you are driving forwards up to a speed of approximately 35 km/h.

If all requirements are met, the P display appears in the instrument cluster display. The system then independently locates and measures parallel and perpendicular parking spaces on both sides of the vehicle.

When Active Parking Assist has detected parking spaces, the P display appears in the instrument cluster display. The arrows show on which side of the road free parking spaces are located.

Active Parking Assist displays parking spaces on the co-driver side as standard. The parking spaces on the driver's side are only displayed if you operate the turn signal on the driver's side. When parking on the driver's side, you must operate the turn signal until you have started active parking assistance by pressing the OK steering-wheel button.

Active Parking Assist can assist you with an active steering intervention and brake application during parking and exiting the parking space. The active brake application is dependent on the country-specific version of the vehicle.

Active Parking Assist is only an aid. It is not a substitute for your attention to the surroundings. You are always responsible for safe manoeuvring, parking and exiting a parking space. Make sure that no persons, animals or objects etc. are in the path of your vehicle.

Active Parking Assist is cancelled in the following cases, among others:

- Parking Assist PARKTRONIC is deactivated.
- You steer.
- You apply the parking brake.
- Parking using Active Parking Assist is no longer possible.
- You exceed a speed of 10 km/h.
- A wheel spins and ESP® intervenes or fails.
- You engage transmission position P.
- You open a door or the tailgate or unfasten your seat belt.

System limits

Objects located above or below the detection range of Active Parking Assist are not detected when the parking space is being measured. These are also not taken into account when the parking manoeuvre is calculated, e.g. overhanging loads, overhangs or loading ramps of lorries, or the boundaries of parking spaces. In some circumstances, Active Parking Assist may therefore guide you into the parking space prematurely.

WARNING Risk of accident due to objects located above or below the detection range of Active Parking Assist

If there are objects above or below the detection range, the following situations may arise:

- Active Parking Assist may steer too early.
- The vehicle may not stop in front of these objects.

There is a danger of collision!

▶ In these situations, do not use Active Parking Assist.

Snowfall or heavy rain may lead to a parking space being measured inaccurately. Parking spaces that are partially occupied by trailer drawbars might not be identified as such or be measured incorrectly. Only use Active Parking Assist on level, high-grip ground.

Do not use Active Parking Assist in the following situations, among others:

- in extreme weather conditions suchas ice, packed snow or in heavy rain
- when cornering
- for parking spaces which are not on the same level as the road, e.g. not on the pavement
- when transporting a load that protrudes beyond the vehicle
- when snow chains are fitted

Active Parking Assist may also display parking spaces that are not suitable for parking, forexample:

- parking spaces where parking is prohibited
- parking spaces on unsuitable surfaces

Active Parking Assist will not assist you with parking spaces perpendicular to the direction of travel in the following situations:

- if two parking spaces are located immediately next to each other
- if the parking space is immediately next to a low obstacle suchas a kerb
- if you are parking forwards

Active Parking Assist will not assist you with parking spaces parallel or perpendicular to the direction of travel in the following situations:

- if the parking space is on a kerb
- if the system deems the parking space to be blocked, suchas by foliage or grass paving blocks
- if the area is too small for the vehicle to manoeuvre into
- if the parking space is bordered by an obstacle, e.g. a tree, a post or a trailer

Parking using Active Parking Assist

⚠ **WARNING** Risk of accident due to insufficiently securing the vehicle against rolling away when exiting the vehicle

If you leave the driver's seat when the vehicle is being braked by Active Parking Assist only, it could roll away in the following situations:

- if there is a malfunction in the system or in the power supply.
- if the electrical system in the engine compartment, the battery or the fuses are tampered with.
- if the battery is disconnected.
- if the vehicle is accelerated, e.g. by a vehicle occupant.

▶ Before leaving the driver's seat, always secure the vehicle against rolling away.

▶ Bring the vehicle safely to a stop when the parking symbol with an arrow shows the desired parking space.

⚠ **WARNING** Risk of accident due to vehicle swinging out while parking or pulling out of a parking space

While parking or pulling out of a parking space, the vehicle swings out and can drive onto areas of the oncoming lane.

This could cause you to collide with objects or other road users.

▶ Pay attention to objects and other road users.

▶ Where necessary, stop the vehicle or cancel the parking procedure with Parking Pilot.

▶ Shift the transmission to position R.
The instrument cluster display shows the Start Parking Assist? Yes: OK No: ⮌ message and the location of the parking space.

▶ **To cancel the process:** press the ⮌ steering-wheel button or drive off.

or

▶ **To park using active parking assistance:** press the OK steering-wheel button.
The Parking Assist in operation Accelerate and brake Observe surroundings message is shown in the instrument cluster display.

▶ Release the steering wheel.

▶ Reverse the vehicle, being ready to brake at all times. Reverse slowly, and do not drive faster than 10 km/h. Parking assistance is otherwise cancelled and Active Parking Assist is stopped. When the vehicle approaches the rear border of the parking space, Active Parking Assist can brake it to a standstill.

▶ Stop at the rear border of the parking space. Stop when PARKTRONIC sounds the continuous warning tone, if not before.

Manoeuvring may be required in tight parking spaces. Observe the messages in the instrument cluster display.

On completion of the parking procedure, the Active Parking Assist finished message appears and an acoustic signal sounds. Active Parking Assist no longer supports you with steering interventions and brake applications.

Exiting a parking space with Active Parking Assist

Requirements

- The vehicle has been parked parallel to the direction of travel using Active Parking Assist.
- The border of the parking space must be high enough at the front and the rear; a kerb, forinstance, is not sufficient.
- The border of the parking space must not be too wide. Your vehicle can be manoeuvred into a position at a maximum angle of 45° to the starting position in the parking space.
- A manoeuvring distance of at least 1 m must be available.

Please note that you are responsible for the vehicle and surroundings during the entire parking procedure.

▶ Start the vehicle.

▶ Switch on the turn signal on the side you intend to exit the parking space.

⚠ **WARNING** Risk of accident due to vehicle swinging out while parking or pulling out of a parking space

While parking or exiting a parking space, the vehicle swings out and can drive onto areas of the oncoming lane.

This could cause you to collide with objects or other road users.

▶ Pay attention to objects and other road users.

▶ Where necessary, stop the vehicle or cancel the parking procedure with Active Parking Assist.

▶ Shift the transmission to position D or R. The instrument cluster display shows the Start Parking Assist? Yes: OK No: ⮌ message and the location of the parking space.

▶ **To cancel the process:** press the ⮌ steering-wheel button or drive off.

or

▶ **To exit the parking space using active parking assistance:** press the OK steering-wheel button.
The Parking Assist in operation Accelerate and brake Observe surroundings message is shown in the instrument cluster display.

▶ Release the steering wheel.

▶ Pull away and be ready to brake at all times. Reverse slowly, and do not drive faster than 10 km/h. Parking assistance is otherwise cancelled and Active Parking Assist is stopped. When the vehicle approaches the rear limit of the parking space, Active Parking Assist can brake it to a stop.

Manoeuvring may be required in tight parking spaces. Observe the messages in the instrument cluster display.

On completion of the parking procedure, the Active Parking Assist finished message appears and an acoustic signal sounds. Active Parking Assist no longer supports you with steering interventions and brake applications.

The parking assistance function of Active Parking Assist is stopped. You will then have to steer and merge into traffic on your own. PARKTRONIC is still available.

ATTENTION ASSIST

Function of ATTENTION ASSIST

ATTENTION ASSIST can assist you during long monotonous journeys, e.g. on motorways and trunk roads. If ATTENTION ASSIST detects indicators of fatigue or increased lapses in concentration on the part of the driver, it suggests taking a break.

ATTENTION ASSIST is only an aid. It cannot always detect fatigue or lapses in concentration in time. The system is not a substitute for a well-rested and attentive driver. On long journeys, take regular breaks in good time that allow for adequate recuperation.

If fatigue or increased lapses in concentration are detected, the ATTENTION ASSIST: Take a break! warning appears in the instrument cluster.

You can acknowledge the message and take a break if necessary. If you do not take a break and ATTENTION ASSIST continues to detect increasing lapses in concentration, you will be warned again after a minimum of 15 minutes.

You can have the current ATTENTION ASSIST assessment displayed using the Assistance graphic menu in the on-board computer (→ page 173).

The following information is displayed:

- The length of the journey since the last break
- The attention level determined by ATTENTION ASSIST:
  - The fuller the bar is, the higher the detected attention level is
  - The bar empties as attentiveness decreases

If ATTENTION ASSIST cannot calculate the attention level and cannot issue a warning, the System suspended message appears.

The bar display is then dimmed. This is the case, forexample, if you are predominantly driving at a speed below 60 km/h or above 200 km/h.

System limits

ATTENTION ASSIST is active in the 60 km/h to 200 km/h speed range.

The functionality of ATTENTION ASSIST is restricted, and warnings may be delayed or not occur at all, in the following situations:

- The journey lasts less than approximately 30 minutes
- The road condition is poor (uneven road surface or potholes)
- The vehicle is subjected to a strong crosswind
- You have a sporty driving style (high cornering speeds or high rates of acceleration)
- The time is set incorrectly
- You change lanes and vary your speed frequently in active driving situations

The ATTENTION ASSIST drowsiness or alertness assessment is deleted and restarted when continuing the journey in the following situations:

- You switch off the vehicle.
- If you unfasten your seat belt and open the driver's door (e.g. to change drivers or take a break).

Deactivating or activating ATTENTION ASSIST

On-board computer:

→ [⌂] ▸▸ Settings ▸▸ Assistance ▸▸ ATTENTION ASSIST

▶ Change the setting and confirm using the [OK] button.
When ATTENTION ASSIST is deactivated, the [OFF] symbol appears in the assistance graphic in the instrument cluster display.

You can choose between the following settings:

- Off
- Standard: normal system sensitivity.
- Sensitive: higher system sensitivity. The driver is warned earlier and the attention level detected by the system is adapted accordingly.

Traffic Sign Assist

Function of Traffic Sign Assist

Traffic Sign Assist aids you by displaying detected speed limits and overtaking restrictions in the instrument cluster.

Since Traffic Sign Assist also uses the data stored in the navigation system, it can update the display in the following situations without detecting traffic signs (country-specific).

The camera also detects traffic signs with a restriction indicated by an additional sign (e.g. when wet).

ⓘ Traffic signs are only displayed with the restriction indicated by an additional sign in the following cases:

- The traffic signs must be observed with the restriction
- The system is unable to clearly determine whether the restriction applies

If the system detects that you are driving onto a section of road in the wrong direction of travel, it triggers a warning. This function is not available in all countries.

Traffic Sign Assist is only an aid and is not always able to correctly display speed limits and overtaking restrictions. The actual traffic signs always have priority over the Traffic Sign Assist display.

Important information from other systems can cause traffic signs to be hidden for a short time.

Observe the notes on driving systems and your responsibility; you may otherwise fail to recognise dangers (→ page 147).

Instrument cluster display

The Traffic Sign Assist display appears in the Assistance graphic menu of the on-board computer (→ page 173).

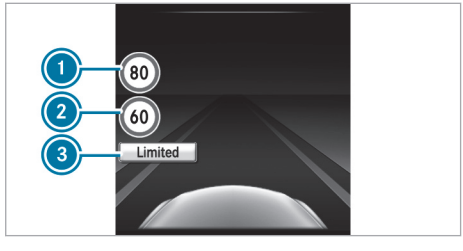

1. Permissible speed
2. Permissible speed when there is a restriction
3. Additional sign with restriction (example: unknown restriction)

If Traffic Sign Assist is not available or cannot determine the maximum permissible speed, the following display appears in the assistance graphic:

System limits

The system may be impaired or may not function in the following situations:

- If there is poor visibility, e.g. due to insufficient illumination of the road, highly variable shade conditions, rain, snow, fog or heavy spray.
- If there is glare, e.g. from oncoming traffic, direct sunlight or reflections.
- If there is dirt on the windscreen in the vicinity of the multifunction camera or if the camera is misted up, damaged or obscured.
- If the traffic signs are hard to detect, e.g. due to dirt, snow or insufficient lighting, or because they are covered.
- If signs are ambiguous, e.g. road signs in roadworks or in adjacent lanes.
- If the information in the navigation system's digital map is incorrect or out-of-date.

Activating/deactivating the Traffic Sign Assist warning function

On-board computer

→ [⌂] ▸▸ Settings ▸▸ Assistance ▸▸ Traffic Sign Assist

▶ **To activate/deactivate:** press the [OK] button.

When the warning function is active and you pass a traffic sign, the instrument cluster shows the traffic regulations (speed limit and overtaking restriction) for five seconds. The previous menu then reappears automatically.

The wrong-way warning remains active if you deactivate the warning function of Traffic Sign Assist.

Blind Spot Assist

Function of Blind Spot Assist

Blind Spot Assist uses two lateral, rear-facing radar sensors to monitor the area directly next to and on the side behind the vehicle.

⚠ **WARNING** Risk of accident despite Blind Spot Assist

Blind Spot Assist does not react to either stationary objects or vehicles approaching and overtaking you at a greatly different speed.

Blind Spot Assist cannot warn drivers in these situations.

▶ Always pay careful attention to the traffic situation and maintain a safe distance at the side of the vehicle.

Observe the notes on driving systems and your responsibility; you may otherwise fail to recognise dangers (→ page 147).

If a vehicle is detected above speeds of approximately 12 km/h and this vehicle subsequently enters the monitoring range directly next to your vehicle, the warning lamp in the outside mirror lights up red.

If a vehicle is detected close to your vehicle in the lateral monitoring range and you switch on the turn signal indicator in the corresponding direction, a warning tone sounds. The red warning lamp in the outside mirror flashes. If the turn signal indicator remains switched on, all other detected vehicles are indicated only by the flashing of the red warning lamp.

When you overtake a vehicle, the warning only occurs if the difference in speed is less than approx. 20 km/h.

System limits

Blind Spot Assist may be limited in the following situations:

- if there is dirt on the sensors or the sensors are obscured
- if there is poor visibility, e.g. due to fog, heavy rain, snow or spray
- if narrow vehicles are within the monitoring range, e.g. bicycles
- if the road has very wide or very narrow lanes
- if vehicles are not driving in the middle of their lane

Warnings may be issued in error when driving close to crash barriers or similar solid lane borders. Warnings may be interrupted when driving alongside long vehicles, for example lorries, for a prolonged time.

Blind Spot Assist is not operational when reverse gear is engaged.

Activating/deactivating Blind Spot Assist

On-board computer:

→ [⌂] ▸▸ Settings ▸▸ Assistance ▸▸ Blind Spot Assist

▶ **To activate/deactivate:** press the [OK] button.

When Blind Spot Assist is activated, grey radar waves propagating toward the rear appear next to the vehicle in the assistance graphic in the instrument cluster display. If you drive faster than 12 km/h with Blind Spot Assist activated, the radar waves in the assistance graphic are displayed in green. Blind Spot Assist is ready for use.

If you switch on the vehicle while Blind Spot Assist is activated, the warning lamps in the outside mirrors light up for approx. 1.5 seconds.

Rear Cross Traffic Alert

Function of Rear Cross Traffic Alert

ⓘ The system is only available for vehicles with Blind Spot Assist.

The system uses the radar sensors in the bumper. This way, the area adjacent to the vehicle is continually monitored. If the radar sensors are obstructed by vehicles or other objects, detection is not possible.

ⓘ Also read the notes on Blind Spot Assist (→ page 166).

The system can warn of crossing traffic when reversing out of a parking space. If the system detects a vehicle, the warning lamp in the outside mirror on the corresponding side lights up red. In a critical situation, an additional warning tone sounds.

The Rear Cross Traffic Alert function is active under the following conditions:

- Blind Spot Assist is activated.
- Reverse gear is engaged or the vehicle is reversing at walking pace.

Lane Keeping Assist

Function of Lane Keeping Assist

Lane Keeping Assist serves to protect you against unintentionally leaving your lane. The system warns you with a noticeable vibration in the steering wheel. Lane Keeping Assist is only an aid and is not intended to keep the vehicle in the lane without the driver's cooperation.

Observe the notes on driving systems and your responsibility; you may otherwise fail to recognise dangers (→ page 147).

The function is available in the speed range between 60 km/h and 200 km/h.

The warning is issued when the following conditions are met at the same time:

- If Lane Keeping Assist detects lane markings.
- If a front wheel drives over lane markings.

To ensure that you are warned only when necessary and in good time if you cross the lane marking, the system detects certain conditions and warns you accordingly.

The warning vibration occurs earlier under the following conditions:

- you approach the outer lane marking on a bend.
- the road has very wide lanes, e.g. a motorway.
- the system detects solid lane markings.

The warning vibration occurs later under the following conditions:

- you are driving on a road with narrow lanes.
- you cut the corner on a bend.

System limits

The system may be impaired or may not function in the following situations:

- If there is poor visibility, e.g. due to insufficient illumination of the road, if there are highly variable shade conditions or in rain, snow, fog or spray.
- Glare from oncoming traffic, direct sunlight or reflections.
- There is dirt on the windscreen in the vicinity of the multifunction camera or the camera is misted up, damaged or obscured.
- No or several unclear lane markings are present for one lane, e.g. in a construction area.
- If the lane markings are worn away, dark or covered up.
- If the distance to the vehicle in front is too short and thus the lane markings cannot be detected.
- The lane markings change quickly, e.g. lanes branch off, cross one another or merge.
- The carriageway is very narrow and winding.

Activating/deactivating Lane Keeping Assist

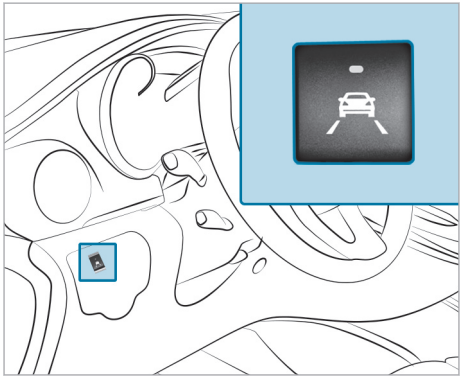

▶ Press the button.
If the indicator lamp in the button is lit, Lane Keeping Assist is activated. If all conditions have been satisfied, there may be a warning.

If Lane Keeping Assist is activated and you are driving at speeds above 60 km/h and lane markings are detected, the lines in the assistance display menu of the on-board computer are shown in green. Lane Keeping Assist is ready for use.

When the system switches over, the Lane Keeping Assist on or Lane Keeping Assist off message is shown briefly in the instrument cluster display.

ⓘ You can find information on the assistance graphic menu under "Assistance graphic" (→ page 173).

Setting the sensitivity of Lane Keeping Assist

On-board computer:

→ ⌂ ▸▸ Settings ▸▸ Assistance ▸▸ Lane Keeping Assist

▶ Select the Standard or Adaptive setting.

In the Standard setting, no warning vibration occurs in the following situations:

- You operate the turn signal in the corresponding direction. The warnings are then suppressed for a certain time period.
- A driving safety system intervenes or regulates, such as ABS, BAS or ESP®.

In the Adaptive setting, there will also be no warning vibration in the following situations:

- You accelerate hard, e.g. kickdown.
- You brake hard.
- You steer actively, e.g. swerve to avoid an obstacle or change lane quickly.
- You cut the corner on a sharp bend.

Overview of the instrument cluster

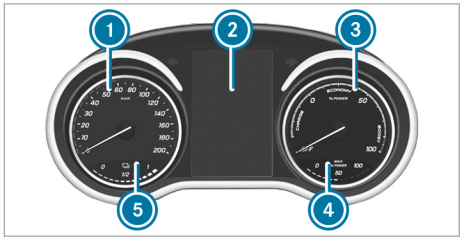

Instrument cluster (example)

1. Speedometer
2. Display
3. Power display (→ page 169)
4. Display of the available power (→ page 172)
5. Charge level display (→ page 171)

Speedometer

In vehicles with Active Distance Assist DISTRONIC, there are illuminated segments on the speedometer dial.

These segments show you what speed range is available:

- Variable limiter activated (→ page 152)

  The segments light up from the start of the scale to the selected limit speed.
- Active Distance Assist DISTRONIC switched on (→ page 153)

  One or two segments light up in the saved speed range.
- Active Distance Assist DISTRONIC detects a vehicle in front

  The segments light up from the speed of the vehicle in front up to the saved speed.

You can show the speed as a digital speedometer on the display as well.

In some countries, an audible signal will sound and/or a message will appear on the display when the vehicle reaches the maximum speed permitted by law, e.g. at 120 km/h.

Outside temperature display

You should pay special attention to road conditions when temperatures are around freezing point.

The outside temperature is shown on the instrument cluster display (→ page 171).

Changes in the outside temperature will be displayed after a short delay.

Function of the power display

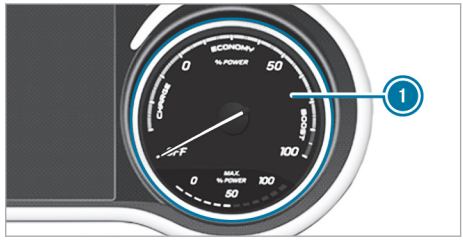

Power display 1 includes two areas:

- The area below 0 displays the power recovered by the vehicle during recuperation.
- The area above 0 displays the current amount of power that the drive system is feeding to the wheels.

If the needle for the power display is in the OFF position, the vehicle is not ready to drive.

The vehicle will not be ready to drive in the following situations:

- The vehicle has not yet started.
- There is still a charging cable connected to the vehicle socket.
- There is insufficient high-voltage battery power available.
- There is a fault in the high-voltage on-board electrical system.

Once the vehicle is ready to drive, the needle will move to the 0 position and the READY display will appear on the instrument cluster.

The braking effect of the electric motor using recuperation will be either reduced or entirely absent in the following operating states:

- When the high-voltage battery state of charge increases.
- The high-voltage battery is not yet at normal operating temperature.
- The vehicle speed is close to stationary.
- The transmission is in position N
- During or after an ESP® control intervention.

If you do not make any additional effort to apply the brakes yourself, the braking effect may not be sufficient. If necessary, counteract the reduced recuperative braking effect by applying the brakes yourself.

Observe the notes on electric mode (→ page 127) and recuperation (→ page 128).

Overview and operation of the on-board computer

WARNING Risk of distraction from information systems and communications equipment

If you operate information systems and communication devices integrated in the vehicle when driving, you could be distracted from the traffic situation. This could also cause you to lose control of the vehicle.

- ▶ Only operate this equipment when the traffic situation permits.
- ▶ If you cannot be sure of this, stop the vehicle whilst paying attention to road and traffic conditions and operate the equipment with the vehicle stationary.

You must observe the legal requirements for the country in which you are currently driving when operating the on-board computer.

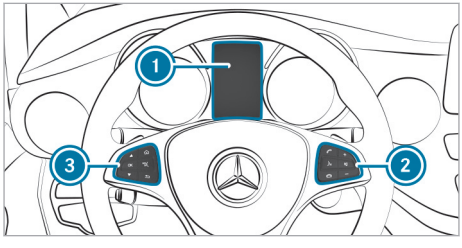

1. Display
2. Right control panel
3. Left control panel

When you switch the power supply on, the on-board computer will be activated.

You can control the displays and the settings on the on-board computer with the steering wheel buttons on the left 3 and right 2 control panels.

Steering-wheel buttons

Left control panel on the steering wheel

⌂	• Call up the main menu
▼ ▲	**Press briefly** • Scroll through lists • Select menu or function • In the Radio or Media menu, open the track or station list and select a station, audio track or video scene. • In the Telephone menu, switch to the telephone book and select a name or a telephone number.
▼ ▲	**Press and hold** • Quickly scroll through all lists • In the Radio or Media menu, use rapid scroll to select a station, audio track or video scene. • In the Telephone menu with the telephone book open, start rapid scroll.
OK	• In all menus, confirm the selected entry on the list or the display • In the Radio or Media menu, open the list of available radio sources or media. • In the Telephone menu, switch to the telephone book and start dialling the selected number.
OFF	• Switch off LINGUATRONIC
⇦	**Press briefly** • Back • Hide display messages • In the Radio or Media menu, exit the track or station list • Exit the telephone book or redial memory
⇦	**Press and hold** • Call up the standard display in the Trip menu

Right control panel on the steering wheel

	• Make or accept a call • Switch to the redial memory
	• Reject or end a call • Exit the telephone book or redial memory
+ / −	• Adjust the volume
	• Switch on LINGUATRONIC
	• Switch sound on/off

Overview of data shown on the instrument cluster display

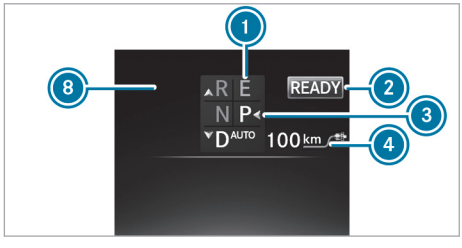

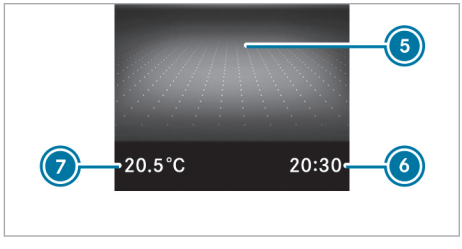

Display (example)

1. Drive program (→ page 134)
2. READY display (→ page 129)
3. Transmission position (→ page 133) and recuperation display (→ page 129)
4. Range
5. Display section for display messages and menus
6. Time
7. Outside temperature
8. Status area

To call up the list of menus in display section 5, press the steering-wheel button.

The following may be shown in display section 5 when the vehicle is not switched on:

- - standard display
- - if a departure time has been set
- - if pre-entry climate control has been set

With the standard display or the display when a departure time has been set , a charging cable connector will also be shown. If the state of charge of the high-voltage battery is below approximately 80% and the high-voltage battery is not being charged, the charging cable connector will be shown as orange instead of white.

The following displays may appear in status area 8 of the display:

- A door is not completely closed
- PARKTRONIC (→ page 157)
- Cruise control (→ page 151)
- LIM Limiter (→ page 151)
- Adaptive Highbeam Assist (→ page 105) or Adaptive Highbeam Assist Plus (→ page 106)

The following displays may also be shown in the footer of the display:

- P Active Parking Assist (→ page 161)
- HOLD HOLD function (→ page 156)
- Maximum permitted speed of 120 km/h exceeded (for certain countries only)
- Rear window wiper switched on (→ page 113)

Function of the charge level display

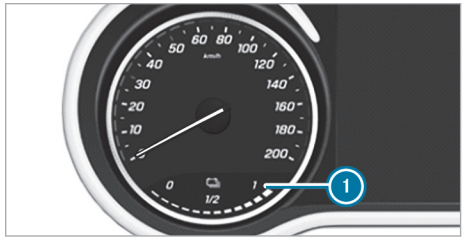

Charge level display (example)

Charge level display 1 shows you the state of charge of the high-voltage battery.

When the vehicle is ready for operation and the Battery reserve level Charge high-voltage battery

message appears or the [ ] indicator lamp on the instrument cluster lights up, the charge level of the high-voltage battery has reached the reserve level.

Charge the high-voltage battery from a state of charge of lower than 20%.

You can find information about charging the high-voltage battery in the section "Charging the high-voltage battery" (→ page 136).

Display of the available power

WARNING Risk of accident with reduced drive system power output

If the drive system power output is reduced, your vehicle will not accelerate in the usual way. You may misjudge your speed, especially when accelerating or overtaking.

▶ Adjust your driving style and drive particularly carefully.

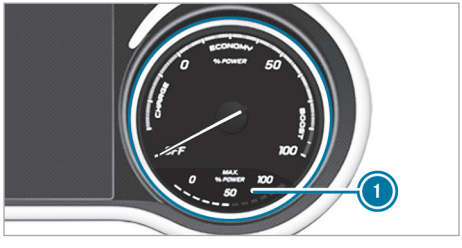

Display (1) shows you the available power of the drive system.

Under normal operating conditions, display (1) is in the maximum range.

The power output available may deviate from the maximum range in the following cases:

- in very high or low outside temperatures
- if there are very high power requirements over an extended period of time
- if the state of charge of the high-voltage battery is very low
- if there is a malfunction in the drive system

Adjusting the instrument lighting

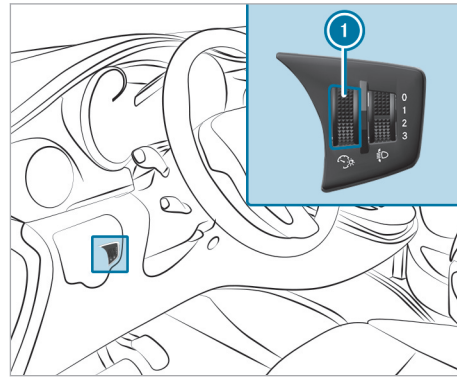

The displays on the instrument cluster are illuminated during the day. A dimming function is not possible in daylight.

The light sensor on the instrument cluster automatically controls the brightness of the display lighting.

When the light is switched on, the brightness control is influenced by the ambient light. You can then adjust the brightness of the instrument lighting and the display lighting with controller (1) as well.

▶ Turn controller (1) up or down.

Overview of menus on the on-board computer

Use the [⌂] steering-wheel button to call up the list of menus and select a menu.

You can find operating information in "Overview and operation of the on-board computer" (→ page 170).

Depending on the vehicle equipment, you can call up the following menus:

- Trip menu (→ page 173)
- Navi menu (navigation instructions) (→ page 174)
- Radio menu (→ page 175)
- Media menu (→ page 176)
- Telephone menu (→ page 177)
- Assistance graphic menu (→ page 173)
- Service menu (→ page 173)
- Settings menu (→ page 177)

Menus and submenus

Service menu

- Press the [⌂] button to call up the list of menus.
- Use the [▼] or [▲] button to select the Service menu.
- Press the [OK] button to confirm.

You have the following options in the Service menu:

- Calling up display messages in the message memory (→ page 254).
- Checking the tyre pressure electronically or restarting the tyre pressure monitoring system (→ page 236).
- Calling up the service due date (→ page 213)

Assistant display menu

- Press the [⌂] button to call up the list of menus.
- With the [▼] or [▲] button, select the Assistance graphic menu.
- Press the [OK] button to confirm.

  The status of the following driving or driving safety systems can be displayed:

  - Rear window wiper (→ page 113)
  - Active Brake Assist (→ page 149)
  - ATTENTION ASSIST (→ page 165)
  - Traffic Sign Assist (→ page 166)
  - Active Distance Assist DISTRONIC (→ page 154)
  - Lane Keeping Assist (→ page 168)
  - Blind Spot Assist (→ page 166)

- Press the [▼] or [▲] button to switch between the assistant display and the evaluation of ATTENTION ASSIST (→ page 164). The evaluation of ATTENTION ASSIST shows the length of journey since the last break and the calculated attention level.

Trip menu

Depending on the vehicle's equipment, you have the following options on the Trip menu:

- Display the ECO display (→ page 132)
- Display the current energy consumption
- Display the trip computer "From start" or "From reset"
- Display the digital speedometer
- Reset the stored values

- Select the desired submenu.

Displaying the current energy consumption

- Press the [⌂] button to call up the list of menus.
- With the [▼] or [▲] button, select the Trip menu.
- Press the [OK] button.
- Use the [▼] or [▲] button to select range and consumption.

The approximate range is determined by the current driving style and the charge level of the high-voltage battery. If the high-voltage battery has a low charge level, the display will show a vehicle being recharged instead of the approximate range.

Displaying trip computer "From start" or "From reset"

- Press the [⌂] button to call up the list of menus.
- With the [▼] or [▲] button, select the Trip menu.
- Press the [OK] button.
- Use the [▼] or [▲] button to select the From start or From reset submenu.

  The following values will be displayed:

  - Distance
  - Length of journey
  - Average energy consumption
  - Average speed

The values on the From start submenu relate to those measured since the start of the journey. The values on the From reset submenu relate to those measured since the submenu was last reset.

The trip computer will automatically be reset in the following conditions:

- The vehicle has been switched off for longer than four hours (only From start).
- A time of 9,999 hours has been exceeded.
- A distance of 99,999 km has been exceeded.

Displaying the digital speedometer

▶ Press the [⌂] button to call up the list of menus.

▶ With the [▼] or [▲] button, select the Trip menu.

▶ Press the [OK] button.

▶ Select the digital speedometer using the [▼] or [▲] button.

Resetting values

The values of the following functions can be reset:

- Trip distance
- "From start" trip computer
- "From reset" trip computer
- ECO display

▶ Press the [⌂] button to call up the list of menus.

▶ With the [▼] or [▲] button, select the Trip menu.

▶ Press the [OK] button.

▶ Use the [▼] button to select Yes and confirm with the [OK] button.

If the values in the "ECO display" or "From start" trip computer are reset, both display values will also be reset.

Navigation menu

In the Navi menu, the display shows navigation instructions from the multimedia system.

▶ Switch on the multimedia system.

▶ Press the [⌂] button to call up the list of menus.

▶ With the [▼] or [▲] button, select the Navi menu.

▶ Press the [OK] button to confirm.

Route guidance not active

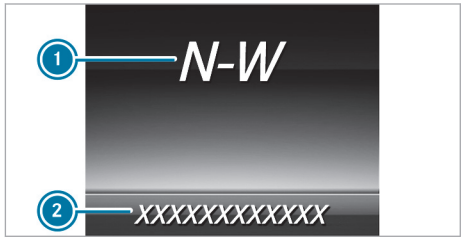

1. Direction of travel
2. Name of current road

Route guidance active

No change of direction announced

1. Distance to the next destination
2. Expected arrival time
3. Distance to the next change of direction
4. Name of current road

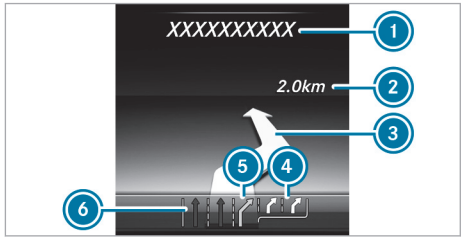

Change of direction announced with lane recommendation

1. Road to which the change of direction leads
2. Distance to the change of direction
3. Change-of-direction symbol
4. Recommended lane and new lane during a change of direction (white)
5. Possible lane (light grey)
6. Lane not recommended (dark grey)

If the digital map contains the corresponding data, lane recommendations for upcoming changes of

direction can be displayed in the case of multi-lane roads. New lanes may be added during the change of direction.

Lane not recommended ⑥: in this lane, you will not be able to complete the next change of direction without changing lane.

Possible lane ⑤: in this lane will you be able to complete the next change of direction.

Recommended lane ④: in this lane, you will be able to complete both the next change of direction and the one after that.

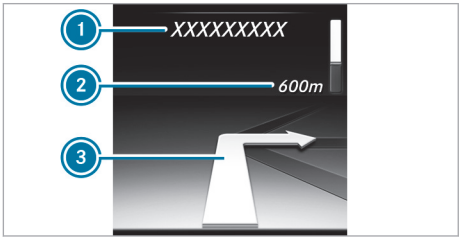

Change of direction without lane recommendation

① Road to which the change of direction leads
② Distance to the change of direction and distance indicator graphic
③ Change-of-direction symbol

When a change of direction is made, you will see distance indicator graphic ② in addition to change-of-direction symbol ③. This will reduce in size from bottom to top as you approach the announced change of direction. When the distance indicator runs out, the change of direction will begin.

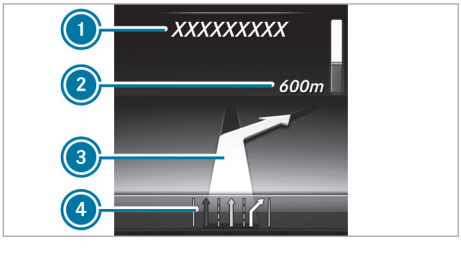

Change of direction with lane recommendation

① Road to which the change of direction leads
② Distance to the change of direction and distance indicator graphic
③ Change-of-direction symbol
④ Lane recommendation

The following additional navigation status displays are possible:

- New route... or Calculating route...

  A new route is being calculated.
- Road not mapped

  The vehicle's position is within the area of the digital map, but the road is not known, e.g. unpaved roads (off-road).
- No route

  No route to the selected destination could be calculated.
- 🏁

  You have reached the destination or an intermediate destination.

Radio menu

① Frequency band
② Channel with memory preset
③ Artist's name
④ Name of track

▶ Switch on the multimedia system.

▶ Press the [⌂] button to call up the list of menus.

▶ Use the [▼] or [▲] button to select the Radio menu.

▶ Press the [OK] button to confirm.
The display will show the station currently selected ②.

▶ **To open the station list:** briefly press the [▼] or [▲] button.

▶ **To select a station in the station list:** briefly press the [▼] or [▲] button.

▶ **To select a station in the station list with rapid scroll:** press and hold the [▼] or [▲] button.

▶ **To select a frequency band or station memory:** briefly press the [OK] button.

- Use the ▼ or ▲ button to select a frequency band or station memory.
- Press the OK button to confirm.

ⓘ You can find further information, e.g. about saving stations and about DAB radio mode (Digital Audio Broadcasting), in "Radio" (→ page 202).

Media menu

- Switch on the multimedia system.
- Press the ⌂ button to call up the list of menus.
- Use the ▼ or ▲ button to select the Media menu.
- Press the OK button to confirm.

Changing the media source

You can change the media source and the playback type (audio, video or TV) in the Media menu.

- **To open/close the media source list:** briefly press the OK button.

  Depending on the vehicle equipment, the list will show the following media sources, for example:
  - Memory card (SD or SDHC)
  - Media register
  - USB storage devices
  - Bluetooth® audio equipment

ⓘ Observe the additional information on media support in "Media" (→ page 200).

Operating data storage media

1. Media source, e.g. the name of the USB flash drive
2. Current track
3. Artist's name
4. Name of album
5. Folder name

Depending on the vehicle's equipment, you can play back audio files from different data storage media.

- **To select a data storage medium:** briefly press the OK button.
  The display will show the list of media sources.
- Press the ▼ or ▲ button to select a data storage medium.
- Press the OK button to confirm.
- **To open the track list:** briefly press the ▼ or ▲ button.
- **To select the next or previous track on the track list:** briefly press the ▼ or ▲ button.
- **To select a track on the track list with rapid scroll:** press and hold the ▼ or ▲ button until the desired track has been reached.
  If you press and hold the ▼ or ▲ button, the rapid scroll speed will increase after a short time. Not all audio players or data storage media support this function.

If the corresponding track information has been saved to the audio player or data storage medium, the display can show the following:

- Track number
- Track name
- Artist
- Album

The track information will not be displayed in AUX audio mode (auxiliary audio mode: external audio source connected).

Operating video

- **To select a data storage medium:** briefly press the OK button.
  The display will show the list of media sources.
- Press the ▼ or ▲ button to select a data storage medium.
- Press the OK button to confirm.
- **To open the scene list:** briefly press the ▼ or ▲ button.
- **To select the next or previous scene on the scene list:** briefly press the ▼ or ▲ button.
- **To select a scene on the scene list with rapid scroll:** press and hold the ▼ or ▲ button until the desired scene has been reached.
- Press the OK button to confirm.

Telephone menu

WARNING Risk of distraction from operating integrated communication equipment while the vehicle is in motion

If you operate communication equipment integrated in the vehicle when driving, you could be distracted from the traffic situation. This could also cause you to lose control of the vehicle.

- Only operate this equipment when the traffic situation permits.
- If you cannot be sure of this, stop the vehicle whilst paying attention to road and traffic conditions and operate the equipment with the vehicle stationary.

When using the phone, you must observe the legal requirements for the country in which you are currently driving.

- Switch on the mobile phone (see the separate operating instructions from the manufacturer).
- Switch on the multimedia system.
- Insert the mobile phone into the mobile phone cradle.

or

- Establish a Bluetooth® connection with the multimedia system (→ page 198).
- Press the [⌂] button to call up the list of menus.
- Use the [▼] or [▲] button to select the Telephone menu.
- Press the [OK] button to confirm.

  The display will show one of the following messages:

  - Telephone ready or name of the mobile phone network provider: the mobile phone has found a network and is ready to receive.
  - Telephone No service: no network is available or the mobile phone is searching for a network.

You can obtain further information about suitable mobile phones and connecting mobile phones via Bluetooth® from a Mercedes-Benz service centre or on the internet under https://www.mercedes-benz.com/connect.

- **To accept a call:** press the [📞] button.

If someone calls you when you are in the Telephone menu, a corresponding message will appear on the display.

- **To reject or end a call:** press the [📞] button.

Dialling a number from the telephone book

- Use the [▼], [▲] or [OK] button to switch to the telephone book.
- Use the [▼] or [▲] button to scroll through the names.
  If you press and hold the button for longer than one second, the names in the telephone book will be displayed quickly one after the other.

or

- Press and hold the [▼] or [▲] button for longer than five seconds.
  Rapid scrolling – the name that starts with the next letter or the previous letter in the alphabet is displayed.

  Rapid scrolling will stop when you release the button or reach the end of the list.
- **If only one telephone number has been saved for a name:** press the [📞] or [OK] button to start dialling.

or

- **If several telephone numbers have been saved for a name:** press the [📞] or [OK] button to display the telephone numbers.
- Use the [▼] or [▲] button to select the telephone number.
- Press the [📞] or [OK] button to start dialling.
- **To exit the telephone book:** press the [📞] or [↩] button.

Using redial

- Press the [📞] button to switch to the redial memory.
- Use the [▼] or [▲] button to select the name or telephone number.
- Press the [📞] or [OK] button to start dialling.
- **To exit the redial memory:** press the [📞] or [↩] button.

Settings menu

- Press the [⌂] button to call up the list of menus.

▶ Use the ▼ or ▲ button to select the Settings menu.

▶ Press the OK button to confirm.

You have the following options on the Settings menu:

- Changing the settings for the driver assistance systems on the Assistance submenu
- Changing the settings for the exterior lighting on the Lights submenu
- Changing the display options on the Instrument cluster submenu
- Resetting the settings to factory settings

▶ Select the desired submenu and confirm your selection.

Assistance submenu

▶ Select a driving or driver assistance system and configure a setting.
  - Switching ESP® on/off (→ page 149).
  - Switching Traffic Sign Assist on/off (→ page 166).
  - Switching Active Brake Assist on/off (→ page 151).
  - Switching Blind Spot Assist on/off (→ page 166)
  - Adjusting ATTENTION ASSIST (→ page 165).
  - Setting Lane Keeping Assist (→ page 168).

Lights submenu

The following settings are possible on the Lights submenu:

- Switching the Intelligent Light System on/off (→ page 105)
- Switching between low beam for right- and left-side traffic (in vehicles with Intelligent Light System only)

▶ Use the ▼ or ▲ button to select the Lights submenu.

▶ Press the OK button to confirm.

▶ **To switch between low beam for right- and left-side traffic:** use the ▼ or ▲ button to select Dipped beams Setting for.
The display will show the selected setting.

▶ Change the selected setting with the OK button.
When you change the setting, the switchover will not take place until the next time the vehicle is stationary.

When you switch over the low beam for right- or left-side traffic, motorway mode and the enhanced fog light function may not be available. This deactivation will take place only if the setting for driving on the right or left is the opposite to your vehicle's national version.

You can have the low beam set for right- or left-side traffic at a qualified specialist workshop as well.

Instrument cluster submenu

▶ Use the ▼ or ▲ button to select the Instrument cluster submenu.

▶ Press the OK button to confirm.

▶ **To select the unit of measurement for distance:** use the ▼ or ▲ button to select the Display unit Speed-/odometer function.
The display will show the selected setting km or Miles.

▶ Change the selected setting with the OK button.

▶ **To switch the additional speedometer on/off:** use the ▼ or ▲ button to select Addit. speedo.
The current selection will appear.

▶ Press the OK button to change the setting.

ⓘ The unit in the additional speedometer is always inverse to the unit of the speedometer.

Vehicle submenu

▶ Use the ▼ or ▲ button to select the Vehicle submenu.

▶ Press the OK button to confirm.

▶ **To reset to factory settings:** use the ▼ or ▲ button to select the Factory settings submenu.

▶ Press the OK button to confirm.
The Reset all settings? function will be displayed.

▶ Use the ▼ or ▲ button to select No or Yes.

▶ Press the OK button to confirm.
If you selected Yes previously, the display will show a confirmation message.

Mercedes me calls

Making a call via the overhead control panel

ⓘ Mercedes me calls are not possible in every country. Find out at a Mercedes-Benz service centre if these functions are available in your country.

ⓘ Please note that product scopes can vary depending on the model series, year of production and equipment, as well as between private and commercial user accounts.

The following services have no limitation in the term:

- Accident and Breakdown Management
- Maintenance management
- Telediagnosis

Other services can be extended at the end of the initial term for a fee. The first activation of the services by the customer is possible within one year of initial registration or commissioning, depending on which happens first.

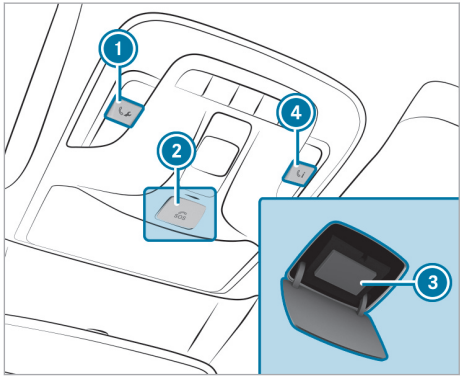

① Breakdown assistance call button
② Cover for SOS button (SOS button)
③ SOS button (SOS button)
④ Info call button

Making a breakdown assistance call

▶ Press button ①.

Making an emergency call

▶ Briefly press cover ② on the SOS button to open it.

▶ Press and hold SOS button ③ for at least one second.

Making an Info call

▶ Press button ④.

An emergency call can be initiated even if a breakdown assistance or Info call is active. This has priority over all other active calls.

Information on the service call using the buttons in the overhead control panel

A call to the Mercedes-Benz Customer Centre using the Info call button or the breakdown assistance call button in the overhead control panel has been initiated.

A call using the Info call button

You can use the Info call button to access the voice control system and then select the appropriate service.

The following services may be available:

- Accident and Breakdown Management
- Mercedes me connect Business
- Mercedes-Benz Customer Centre for general information about the vehicle

Depending on the selection, you can find information on the following topics:

- Activation of Mercedes me connect
- Operating the vehicle
- Nearest Mercedes-Benz service centre
- Other products and services from Mercedes-Benz

You will then be connected to a specialist at the Mercedes-Benz Customer Centre.

A call using the breakdown assistance call button

If you use the breakdown assistance call button you will be directly connected with an employee at the Mercedes-Benz Customer Center.

Depending on the issue, the specialist at the Mercedes-Benz Customer Centre will forward your call to the appropriate body.

ⓘ It is not possible to forward the call in every country.

The following services are available if required:

- Mercedes me connect Business
- Mercedes-Benz Customer Centre for general information about the vehicle

If the Accident Recovery and Breakdown Management service is activated, data is transmitted dur-

ing the connection to the Mercedes-Benz Customer Centre (→ page 181).

If the service is not activated, a pop-up window appears. You can agree or refuse to the data transfer.

Calling the Mercedes-Benz Customer Centre using the multimedia system

Requirements:

- MBUX multimedia system is available in the vehicle.
- Access to a mobile phone network is available.
- The contract partner's mobile network coverage is available in the respective region.
- The vehicle must be switched on so that vehicle data can be transferred automatically.

Multimedia system:

Phone

▶ Call Mercedes me connect.
With your consent, the multimedia system sends the required vehicle data. The data transfer is shown in the media display.

You can reach the desired service via the voice dialogue system:

- Accident and Breakdown Management
- Mercedes me connect Business
- Mercedes-Benz Customer Centre for general information about the vehicle

You will then be connected to a specialist at the Mercedes-Benz Customer Centre.

Calling the Mercedes-Benz Customer Centre after automatic accident or breakdown detection

Requirements:

- The vehicle has detected an accident or breakdown situation.
- The vehicle is stationary.
- The hazard warning light is switched on.

Vehicles with the multimedia system

ⓘ This function is not available in all countries.

If an accident or breakdown is detected, the emergency guide shows safety instructions in the multimedia system display. This may take a few seconds.

After quitting the emergency guide display on the multimedia system, a prompt appears asking whether you wish to get support from the Mercedes-Benz Customer Centre.

▶ Select Call.
- After your agreement, or if the Mercedes me connect service "Accident and Breakdown Management" is active, the vehicle data is transferred automatically (→ page 182).
- The Mercedes-Benz Customer Centre will take your call and organise breakdown and accident assistance.

You may be charged for these services.

ⓘ If the service is available: in addition, if the Mercedes me connect "Telediagnostics" service is active, a similar query may appear at a later time in the event of a breakdown. If you are already in contact with the Mercedes-Benz Customer Centre or have received help, this query can be ignored or rejected.

ⓘ If you answer the prompt for support from the Mercedes-Benz Customer Centre with Later the message will disappear and reappear at a later time.
The query triggered by the "Telediagnostics" Mercedes me connect service can either be confirmed or rejected. After rejection, it is no longer displayed.

Arranging a service appointment via Mercedes me call

If you have activated the maintenance management service, relevant vehicle data is transferred automatically to the Mercedes-Benz Customer Centre. You will then receive individual recommendations regarding the maintenance of your vehicle. You will receive an offer for the upcoming maintenance scopes from the service partner stored in Mercedes me.

Regardless of whether you have consented to the maintenance management service, the multimedia system reminds you after a certain amount of time that a service is due. A prompt appears asking if you would like to make an appointment.

▶ **To arrange a service appointment:** select Call.
After your confirmation, the vehicle data is sent and the Mercedes-Benz Customer Centre deals with your appointment. The information is then sent to your desired service outlet.

They will contact you to confirm the appointment and, if necessary, to discuss the details.

ⓘ If you select Later after the service message appears, the message is hidden and reappears at a later time.

ⓘ No request for consent to data transmission is made, if the Mercedes me connect Accident and Breakdown Management service is activated.

Consenting to data transfer for a Mercedes me call

Requirements:

- There is an active Mercedes me call via the multimedia system or the buttons in the overhead control panel (→ page 179).

ⓘ The prompt to confirm data transfer does not appear in all countries.

If the Accident and Breakdown Management services are not activated on Mercedes me, the following message appears Do you want to transmit vehicle data and the vehicle's position to the Mercedes-Benz Customer Centre in order to improve the processing of your request?.

▶ Select Yes.
Relevant identification data is transmitted automatically.

More information on Mercedes me: https://www.mercedes.me

Transferred data during a Mercedes me call

When you make a service call via Mercedes me, data is transmitted. This enables targeted advice and smooth service.

The following requirements must be met for the data transfer:

- The vehicle is switched on.
- The necessary data transmission technology is supported by the mobile phone network provider.
- A sufficient mobile phone connection quality is provided.

Multi-stage transmission depends on the following factors:

- Reason for the initiation of the call
- Available mobile radio transmission technology
- Activated Mercedes me connect services
- Selected service in the voice dialogue system

ⓘ A request for consent to data transmission is only made if the corresponding Mercedes me connect service has not been activated.

ⓘ The scope of the transmitted data depends on the vehicle model and equipment. For technical reasons not all data is available at all times.

Data transmission when Mercedes me connect services are not activated

If no Mercedes me connect services are activated and the data protection query has been confirmed, the following data will be transferred:

- Vehicle identification number
- Time of the call
- Reason for the initiation of the call
- Confirmation of the data protection prompt
- Vehicle country code
- Set language for the multimedia system
- Call number of the communication platform installed in the vehicle

If a call is made for a service appointment via the service reminder, the following data is also transmitted:

- Current mileage and maintenance data

If a call was made via the multimedia system after automatic accident or breakdown detection, the following data is also transmitted:

- Current mileage and maintenance data
- Estimated number of people in the vehicle

  The detection is based on the number of closed seat belt buckles on the front seats.

If the Accident and Breakdown Management selection has been made via the voice dialogue system and no service has been activated, but the data protection query has been confirmed, the following data can be additionally requested from the vehicle by the Mercedes-Benz Customer Centre:

- Current vehicle location

If the data protection request has been declined, the following data will be transferred to enable targeted advice and a smooth service:

- Reason for the initiation of the call
- Rejection of the data protection prompt
- Vehicle country code

- Set language for the multimedia system
- Call number of the communication platform installed in the vehicle

Data transmission when Mercedes me connect services are activated
Only in the second step, only for the respective activated services, further case-specific data is transmitted in order to enable an optimal service.

An overview of the data transmitted can be found in the respective terms of use for Mercedes me connect services. These can be obtained in the Mercedes me Portal: https://me.secure.mercedes-benz.com

Data processing
The data transmitted as part of the call will be deleted from the transmitting systems once the call has been completed, provided they are not used for other activated Mercedes me connect services.

The case-related data will be processed and stored in the Mercedes-Benz Customer Centre and, if necessary for case processing, forwarded to the service partners commissioned by the Mercedes-Benz Customer Centre. Please refer to the data protection information on the Mercedes me website at https://www.mercedes.me or in the recorded message immediately after the call to the Mercedes-Benz Customer Centre has been set up.

ⓘ The recorded message is not available in every country.

Mercedes me connect

Information about Mercedes me connect

ⓘ Mercedes me connect or individual Mercedes me connect services are not available in every country. Contact a Mercedes-Benz service centre to find out whether these functions are available in your country.

ⓘ Please note that product scopes can vary depending on the model series, year of production and equipment, as well as between private and commercial user accounts.

Mercedes me connect comprises a number of services.

Using the multimedia system or the overhead control panel, if available, you can use the following services, for example:

- Accident and Breakdown Management (Breakdown assistance call button or the situation-dependent display in the multimedia system)
- Mercedes-Benz Emergency Call System (automatic emergency call and SOS button)

Mercedes me connect Accident and Breakdown Management and the Mercedes-Benz emergency call centre are available to you around the clock.

You will find the breakdown assistance call button and the SOS button in the vehicle's overhead control panel (→ page 179).

If the multimedia system is available in the vehicle, you can also call the Mercedes-Benz Customer Centre using the multimedia system (→ page 180).

Please note that Mercedes me connect is a Mercedes-Benz service. In emergencies, call the national emergency services first using the standard national emergency service phone numbers. You can also use the Mercedes-Benz emergency call system (→ page 223).

Observe the conditions of use for Mercedes me connect and other services. These can be obtained in the Mercedes me Portal: https://me.secure.mercedes-benz.com

Information on Mercedes me connect Accident and Breakdown Management

ⓘ Accident and Breakdown Management is not available in every country. Contact a Mercedes-Benz service centre to find out whether this function is available in your country.

The Accident and Breakdown Management can, amongst others, include the following functions:

- Supplement to the Mercedes-Benz emergency call system (→ page 223)

  If necessary, the contact person at the Mercedes-Benz emergency call centre forwards the call to Mercedes me connect Accident and Breakdown Management. However, call forwarding is not possible in all countries.
- Breakdown assistance on location by a technician and/or towing away of the vehicle to the nearest Mercedes-Benz service centre

  You may be charged for these services.

- Supplement to the emergency guide after automatic accident or breakdown detection (→ page 180)

  In the event of a breakdown or accident, extended vehicle data is sent, enabling optimum support from the Mercedes-Benz Customer Centre and the appointed service partner or breakdown mechanic.
- If available: addition to the Mercedes me connect Telediagnostics service

  With the Telediagnostics function, the service provider records certain wear and failure messages, insofar as these can be clearly interpreted and are available by monitoring diagnosable components.

  If your vehicle detects a breakdown or impending breakdown, you may be prompted via the multimedia system to contact the Mercedes-Benz Customer Centre for further assistance. This prompt in the multimedia system only appears when the vehicle is stationary.

ⓘ These services are subject to technical restrictions such as mobile coverage and mobile network quality and the interpretability of the transmitted data in the processing systems. Under certain circumstances, this may result in delays or omission of the message in the multimedia system.

Please note that the breakdown assistance call is a Mercedes-Benz service. In the event of an emergency always call the national emergency services first or use the Mercedes-Benz emergency call system (→ page 223).

Further information about Mercedes me connect services can be obtained in the Mercedes me Portal: https://me.secure.mercedes-benz.com

Data transferred during Mercedes me connect call services

The data transferred during the Mercedes me connect call depends on:

- The reason for the initiation of the call
- The service selected in the voice dialogue system
- The activated Mercedes me connect services

The data which is transferred is listed in the currently valid terms of use and data protection information of Mercedes me connect. These can be found at: https://www.mercedes.me under "My Mercedes me account", "Terms of use".

Mercedes me and apps

Information about Mercedes me

Requirements:

- To use the services, registration in the Mercedes me Portal must have been carried out.
- The terms of use for Mercedes me connect services have been agreed to.
- The services are activated.

  The services can be activated in the Mercedes me Portal via the path Manage vehicle > My services.

When you log in with a user account to the Mercedes me Portal, then services and offers from Mercedes-Benz will be available to you.

ⓘ Please note that product scopes can vary depending on the model series, year of production and equipment, as well as between private and commercial user accounts.

Availability is country-dependent.

For more information consult a Mercedes-Benz service centre or visit the Mercedes me Portal: https://me.secure.mercedes-benz.com.

ⓘ Make sure that you always keep the Mercedes me Apps up to date.

Calling up a Mercedes me user account

Requirements:

- You have a user account for the Mercedes me Portal.
- The vehicle is linked to the user account and you have accepted the terms of use for the Mercedes me connect services.
- The Personalisation service is activated on Mercedes me connect.

Multimedia system:

→ [⌂] ▸▸ Mercedes me & Apps

▶ Select a menu option.

or

▶ Call up General settings and switch one of the synchronisation functions on or off.

Vehicle is linked to user account

▶ Select Mercedes me.
Information about the linked user account appears.

Your vehicle is not linked to the user account

ⓘ If you do not yet have a Mercedes me user account, you can create one at: https://www.mercedes.me or in the Mercedes me App. A valid email address or phone number is required for this.

▶ Select Mercedes me.

▶ Follow the instructions on the media display to link the user account with the vehicle.

ⓘ Linking via the instructions on the media display is then only possible if an MBUX multimedia system is installed in the vehicle.

ⓘ If the Mercedes me App is available on a mobile phone, the vehicle link can be made via the displayed QR code.

Calling up Mercedes me services

Requirements:
- The vehicle is connected with the user account.

Multimedia system:

→ ⌂ ▸▸ Mercedes me & Apps

▶ Select Services.
You will be shown the Mercedes me services that you have already purchased and those that you can also still purchase within the various categories.

To activate or deactivate the services, log in to the Mercedes me Portal with your user account.

Removing the link between the user account and the vehicle

Requirements:
- The user profile of the user account that was first linked to the vehicle is selected.
- The profile is synchronised.
- A PIN has been saved.

Multimedia system:

→ ⌂ ▸▸ Mercedes me & Apps
▸▸ Mercedes me

▶ Select Delete vehicle assignment.

▶ Enter the PIN of the linked user account.

ⓘ Only the user whose user account was linked to the vehicle first can remove the link between all user accounts and the vehicle.

ⓘ Alternatively, linking can be removed in the Mercedes me Portal or in the Mercedes me App (Remove vehicle).

Overview and operation

Notes on MBUX multimedia system

WARNING Risk of distraction from information systems and communications equipment

If you operate information systems and communication devices integrated in the vehicle when driving, you could be distracted from the traffic situation. This could also cause you to lose control of the vehicle.

- Only operate this equipment when the traffic situation permits.
- If you cannot be sure of this, stop the vehicle whilst paying attention to road and traffic conditions and operate the equipment with the vehicle stationary.

You must observe the legal requirements for the country in which you are currently driving when operating the multimedia system.

Overview of the MBUX multimedia system

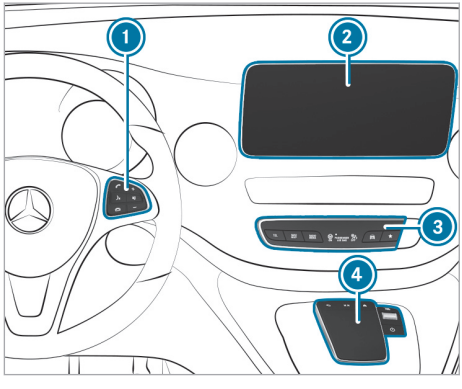

1. Control panel for multimedia system
2. Media display with touch functionality
3. Operating strip, calls up applications
4. Touchpad and controls for the multimedia system

ⓘ You can find further information about operation as well as about applications and services in the Digital Owner's Manual.

There are two USB ports in the centre console storage compartment.

The USB port with the symbol facilitates the connection of the mobile phone with the multimedia system using a suitable cable. This will enable you to use the functions of the mobile phone via Apple CarPlay® or Android Auto.

Notes on the media display
Observe the notes on caring for the interior (→ page 220).

Automatic temperature-controlled switch-off feature: if the temperature is too high, the brightness is initially reduced automatically. The media display may then switch off completely for a while.

ⓘ If you are wearing polarised sunglasses, it may be difficult to read the media display.

Anti-theft protection
This device is equipped with technical provisions to protect it against theft. More detailed information about anti-theft protection can be obtained at a qualified specialist workshop.

Home screen overview

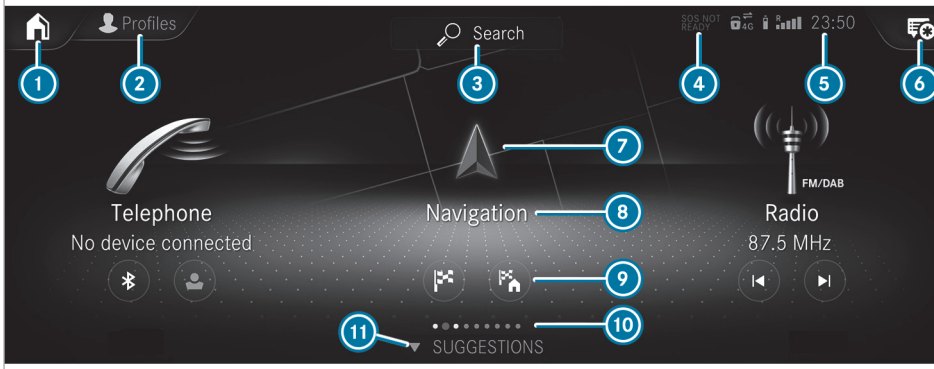

1. On the home screen: displays the first three applications
   In other displays: calls up the home screen
2. Calls up the profile
3. Calls up the global search
4. SOS NOT READY display only when the vehicle is switched off or the Mercedes-Benz emergency call system is malfunctioning
5. Displays, e.g. network display, battery status of the mobile phone connected, signal strength of the mobile phone network, time
6. Calls up the Notifications Centre
   The star indicates new notifications.
7. Calls up an application using the symbol
8. Name of the application, beneath the current selection or information
9. Quick-access (in the example: calls up destination entry and enters the destination address for home)
10. Number of applications and currently selected display area
11. Calls up SUGGESTIONS and FAVOURITES

Operating the MBUX multimedia system

Using the steering wheel buttons

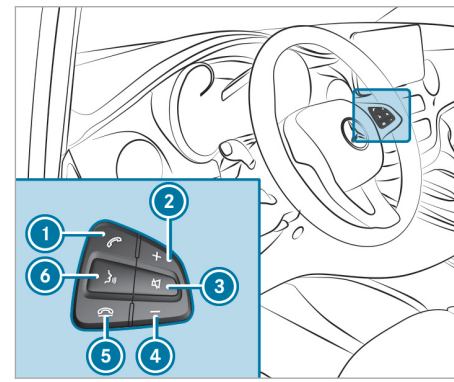

1. Makes or accepts a call
2. Increases the volume
3. Mutes
4. Reduces volume
5. Rejects or ends a call
6. Switches on LINGUATRONIC

▶ Press one of the buttons.

Using the touchscreen

▶ **To navigate in menus:** swipe up, down, left or right.

▶ **To select an entry:** tap on the entry.

- ▶ **To enter characters with the keyboard:** tap on a button.
- ▶ **To use handwriting to enter characters:** write the character with one finger on the touchscreen.
- ▶ **To zoom in and out of the map:** move two fingers together or apart.
- ▶ **To enlarge or reduce the size of a section of a website:** move two fingers together or apart.
- ▶ **To call up a global menu in the applications:** touch the touchscreen and hold until the OPTIONS menu appears.

On the touchpad

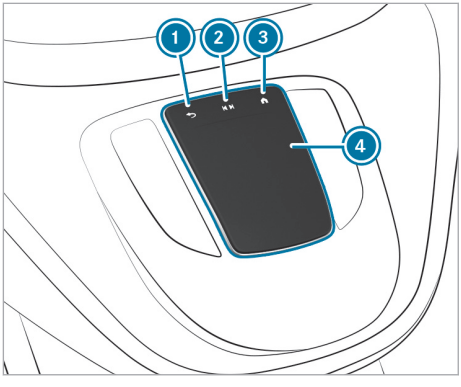

1. Returns to the previous display
2. Calls up the control menu of the last active audio source
3. Shows the home screen and calls up applications
4. Touchpad

- ▶ **To navigate in menus:** swipe up, down, left or right.
- ▶ **To select an entry:** press on the entry.
- ▶ **To enter a character:** enter a character using the keypad.

or

- ▶ Write a character on the touchpad.
- ▶ **To move the digital map:** swipe in any direction.

Calling up applications using buttons

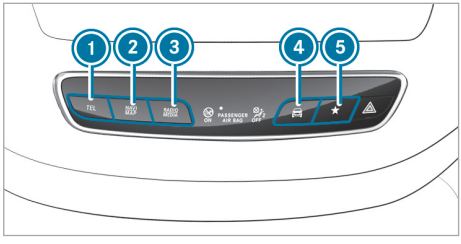

1. TEL Calls up the telephone
2. NAVI MAP Calls up the navigation or map
3. RADIO MEDIA Pressing repeatedly calls up the desired audio source
4. Sets vehicle functions
5. ★ Calls up favourites

- ▶ Press one of the buttons.

Function of LINGUATRONIC

If you use the voice control system in an emergency your voice can change and your telephone call, e.g. an emergency call, can thereby be unnecessarily delayed.

Familiarise yourself with the voice control system functions before starting the journey.

With LINGUATRONIC, various applications of the MBUX multimedia system can be operated by voice input. LINGUATRONIC is operational approximately thirty seconds after the vehicle is switched on and is available from the driver's and front passenger's seat.

The following applications of the multimedia system can be operated:

- Navigation
- Telephone
- Radio
- Media player
- Messages
- Vehicle functions

Starting LINGUATRONIC

- ▶ Press the rocker switch up on the multifunction steering wheel.
  You can say a voice command after the acoustic signal.

Information on profiles, suggestions and favourites

Using the multimedia system up to seven profiles can be created in the vehicle.

Profiles store your personal vehicle settings and settings for the multimedia system.

If the vehicle is used by several drivers, the driver can select their profile before the journey, without changing the settings of other drivers.

The following settings are saved in your profile, for example:

- Radio (including station list)
- Last destinations
- Favourites and suggestions

The vehicle can learn the habits of the driver. It then offers suggestions for the most likely navigation destinations, media sources, radio stations or contacts. The requirements for that are the selection of a profile, your consent to the recording of data and sufficient collected data.

Favourites are quick accesses to frequently used applications. Favourites can be selected from categories or added directly in an application.

Configuring profiles and suggestions

Multimedia system:

→ [⌂] » [👤] Profiles

Creating a new profile

▶ Select [+] Create profile .

▶ Select an avatar.

▶ Enter the name and confirm with [OK].

▶ Select Continue [>].

▶ Select Current settings.

▶ Select Save.

▶ Activate Bluetooth® and select Connect phone, to connect a mobile phone with the user profile.

▶ Select Finished.

Selecting profile options

▶ Select [•••] for a profile.

The following functions are available:

- Resetting or deleting a profile
- Resetting favourites
- Configuring suggestions

Configuring suggestions

▶ Select [•••] for a profile.

▶ Select Suggestions settings.

▶ Switch Allow destination suggestions, Allow music suggestions and Allow contact suggestions on or off.

▶ **To deactivate the learn function for one day:** activate Deact. learn. for 24h.
For 24 hours no new actions will be trained and no data recorded for the active profile. Suggestions will continue to be shown.

Example: if the option is switched on and a route to a new destination has been calculated, this destination would not be taken into account for the learn function.

System settings

Overview of the system settings menu

In the system settings menu, you can make settings in the following menus and control elements:

- Display
- Control elements:
  - Keyboard language and handwriting recognition
  - Sensitivity of the Touch Controls
- LINGUATRONIC
- Sound:
  - Entertainment
  - Navigation and traffic announcements
  - Telephone
  - Voice amplification to the rear
- Connectivity:
  - Transmission of the vehicle location
  - Wi-Fi, Bluetooth®, NFC
- Time & date
- Language
- Units for distance
- Software updates
- Data import and data export
- PIN protection
- System Reset

Information on important system updates

Important system updates may be necessary for the security of your multimedia system's data. Install these updates, or else the security of your multimedia system cannot be ensured.

A system update consists of three steps:

- Downloading or copying of the data required for installation
- Installation of the downloaded system update
- Activation of the downloaded system update by restarting the system

ⓘ To use online updates, there must be an Internet connection. To use automatic online updates, your vehicle must have a permanently installed communication module.

ⓘ You can manually start the software update in the system settings. If automatic software updates are activated, the system updates will be downloaded automatically. Settings for automatic software updates can also be made in the system settings.

The multimedia system provides a message when a system update is available.

You have the following selection options:

- Download

  The system update will be downloaded in the background.
- Details

  Information about the pending system update is displayed.
- Later

  The system update can be downloaded manually at a later time.

Deep system updates

Deep system updates access vehicle or system settings and can therefore only be carried out when the vehicle is stationary and the ignition is switched off.

If the download of a deep system update is complete and the downloaded system update is ready for installation, you will be informed of this after the vehicle is switched off and back on, for example.

ⓘ Park the vehicle safely in a suitable location before starting the installation.

Requirements for the installation:

- The vehicle is switched off.
- Notes and warnings have been read and accepted.
- The electric parking brake is applied.

If all requirements have been fulfilled, the downloaded system update is installed. The multimedia system cannot be operated while the downloaded system update is being installed and vehicle functions are restricted.

If errors occur during the installation, the multimedia system automatically attempts to restore the previous version. If restoration of the previous version is not possible, a symbol appears on the media display. Consult a qualified specialist workshop to resolve the problem.

Setting up a Wi-Fi hotspot

Requirements:

- **To set up the Wi-Fi connection of the multimedia system with external hotspots:** there is no communication module installed.
- The device to be connected supports at least one of the types of connection described.

Multimedia system:

⇥ [⌂] ▸▸ Settings ▸▸ System ▸▸ Wi-Fi & Bluetooth

Activating/deactivating Wi-Fi

▶ Select Wi-Fi.

Connecting the multimedia system to an external hotspot via Wi-Fi

ⓘ The connection procedure may differ depending on the device. Follow the instructions that are shown in the display. Further information can be found in the manufacturer's operating instructions.

▶ Select Internet settings.

▶ Select Connect via Wi-Fi.

▶ Select Add hotspot.

▶ Select the type of connection to be established on the multimedia system and on the device to be connected.

Connecting using a security key

▶ Select the options [>] of the desired Wi-Fi network.

▶ Select Connect using security key.

- Have the security key displayed on the device to be connected (see the manufacturer's operating instructions).
- Enter this security key on the multimedia system.
- Confirm the entry with ok.

Activating automatic connection

- Select Connect via Wi-Fi.
- Select the options > of the desired Wi-Fi network.
- Activate Permanent Internet connection.

Connecting with a known Wi-Fi network

- Select Connect via Wi-Fi.
- Select a Wi-Fi network.
  The connection is established again.

Configuring the multimedia system as a Wi-Fi hotspot for external devices

The type of connection established depends on the device to be connected. The function must be supported by the multimedia system and by the device to be connected.

- Select Vehicle hotspot.
- Select Connect device to vehicle hotspot.
- Select the type of connection to be established on the multimedia system and on the device to be connected.

ⓘ Additional data volume is required for the "Internet in the Car" service and the associated use of web browsers, Internet Radio or the Wi-Fi hotspot, for example. This can be purchased directly from the mobile phone network provider.

Connecting using a security key

- Select Connect device to vehicle hotspot.
  A security key is displayed.
- Select the vehicle from the device to be connected. The vehicle is displayed with the DIRECT-MBUX XXXXX network name.
- Enter the security key which is shown in the media display on the device to be connected.
- Confirm the entry.

Connecting using NFC

- Select Connect via NFC.
- Activate NFC on the mobile device (see the manufacturer's operating instructions).
- Hold the device to be connected at the vehicle's NFC interface.
- Select Finished.
  The mobile device is now connected to the multimedia system hotspot via NFC.

Generating a new security key

- Select Vehicle hotspot.
- Select Generate security key.
- Select New security key.
  A connection will be established with the newly created security key.
- **To save a security key:** select Save.
  When a new security key is saved, all existing Wi-Fi connections are then disconnected. If the Wi-Fi connections are being re-established, the new security key must be entered.

System language

Notes on the system language

This function allows you to determine the language for the menu displays and the navigation messages. The selected language affects the characters available for entry. The navigation announcements are not available in all languages. If a language is not available, the navigation announcements will be in English.

Setting the system language

Multimedia system:

→ ⌂ ▸▸ Settings ▸▸ System ▸▸ Language

- Set the language.

ⓘ If you are using Arabic map data, the text information can also be shown in Arabic on the navigation map. To do so, select العربية as the language from the language list. Navigation announcements are then also made in Arabic.

Resetting the multimedia system (reset function)

⚠ **WARNING** Risk of accidents due to failure of multimedia display functions

While the multimedia system is being reset, its functions such as the reversing camera are not available.

- Only reset the multimedia system when the vehicle is stationary.

Multimedia system:

→ [⌂] ▸▸ Settings ▸▸ System ▸▸ Reset

Personal data is deleted, for example:

- Station presets
- Connected mobile phones
- Individual user profiles

ⓘ The guest profile is reset when the settings are restored to the factory settings.

A prompt appears again asking whether your really want to reset the system.

▶ Select Yes.

If PIN protection is activated, a prompt appears asking if you also wish to restore this to the factory settings during a reset.

▶ Select variant 1: Yes.

▶ Enter the current PIN.
The PIN is reset.

▶ Select variant 2: No.
The current PIN stays the same after resetting.

ⓘ If you have forgotten your PIN, a Mercedes-Benz service centre can deactivate the PIN protection for you.

A prompt appears again asking whether you really wish to reset.

▶ Select Yes.
The multimedia system is reset to the factory settings.

Resetting using buttons

▶ Simultaneously press and hold buttons [TEL] and [☆] until the multimedia system restarts (at least 15 seconds).
The multimedia system is restarted. No data is deleted during this process.

Navigation

Switching on navigation

Multimedia system:

→ [⌂] ▸▸ Navigation

▶ Alternatively: press the [NAVI MAP] button.
The map shows the current vehicle location.
The navigation menu is shown.

The navigation menu is hidden if route guidance is active.

▶ **To show:** tap on the touchscreen.

▶ **To hide:** the menu is hidden automatically.

Navigation overview

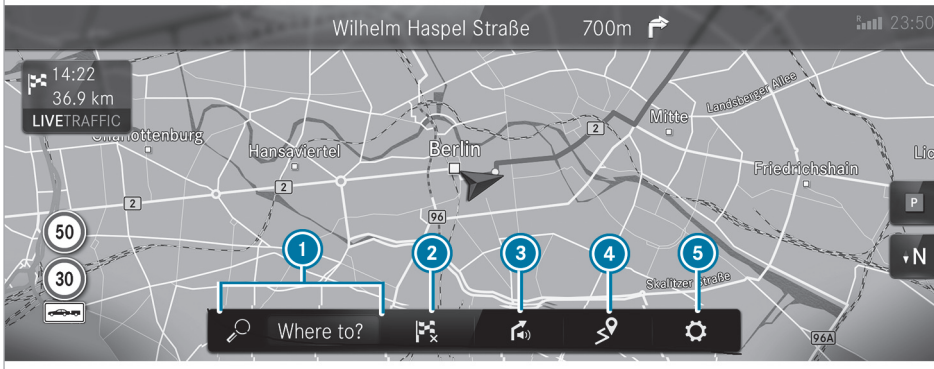

Example: digital map with navigation menu

1. To enter a POI or address and additional destination entry options
2. To interrupt route guidance (if route guidance is active)
3. To repeat a navigation announcement and switch navigation announcements on or off
4. To call up the ON ROUTE menu
   - To show Route overview
   - To select Alternative routes
   - Report traffic incident (Car-to-X)
   - To call up the TRAFFIC menu
   - To show Traffic announcements
   - To show Area announcements
   - To show Live Traffic Subscription Info
   - To show Route list
   - To call up the POSITION menu
   - Store position
   - To show Compass
   - To show Qibla (available in selected countries)
5. Quick-access and settings
   - To show Traffic
   - To show Parking
   - To show Motorway information
   - Via Advanced options to use View, Announcements and Route

ⓘ Some options are not available in all countries.

Entering a destination

Multimedia system:

Navigation ▸▸ Where to?

1. Country in which the vehicle is located
2. To enter a POI or address
   Underneath: Multimedia system suggestions during destination entry
   During input: delete the entry with ⊗.
3. List with additional destination entry options
   During destination entry: select search result
4. To delete entered character
5. OK To confirm an entry
6. To call up handwriting recognition
7. To enter a space
8. To activate voice input
9. To set the written language
10. To switch to numbers, special characters and symbols
11. To switch to upper-case or lower-case letters

▶ Enter the destination in 2. The entries can be made in any order.

The following entries can be made, for example:

- Town, street, house number
- Street, town
- Postcode
- POI name or POI category
- Contact name

▶ Select a search result in list 3.

▶ Calculate the route (→ page 194).

ⓘ You can find further information about destination entry, e.g. three-word addresses, in the Digital Owner's Manual.

Changing the country

▶ Select the country indicator in 1.

▶ Enter the country indicator.

▶ Select the country in 3.

Using online search

ⓘ Requirements:

- Internet is connected (symbol ⇄ in the status bar).
- Mercedes me connect is available.
- You have a user account for the Mercedes me Portal.
- The vehicle is linked to the user account and you have accepted the terms of use for the Mercedes me connect services.
- The navigation services are available and have been activated.

ⓘ Online search is not available in all countries.

Destination entry uses online map services. If the on-board search finds no suitable destinations or if you change countries, the online search is available.

For the destination you can enter an address, a POI or a three-word address.

▶ Select country indicator 1.

- Select the provider for the online service from the countries list.
- Enter the destination in 2.
  The search results are displayed.
- Select the destination in list 3.
  The detailed view for the route is displayed.

or

- Enter the destination in 2.
  The search results are displayed.
- Select the destination in list 3.
  The detailed view for the route is displayed.

Calculating a route and using settings for route guidance

Requirements:

- The destination has been entered.
- The destination address is shown.
- For Navigation with Electric Intelligence:
  - Mercedes me connect is available.
  - You have a user account on Mercedes me connect and the vehicle is linked to the account.
  - The service "Electric Intelligence Remote & Navigation Services" is available and can be activated in the Mercedes me Portal.
  - The scope includes the services "Navigation with Electric Intelligence" and "Display of charging stations".
  - The Electric Intelligence route option is switched on.
- For the commuter route:
  - You have created a profile (→ page 188).
  - The Allow destination suggestions option is switched on.
  - The Activate commuter route option is switched on.
  - The multimedia system has gathered sufficient data in order to show destination suggestions.
  - Routes have been learned for these destination suggestions.

Multimedia system:

→ [⌂] » Navigation

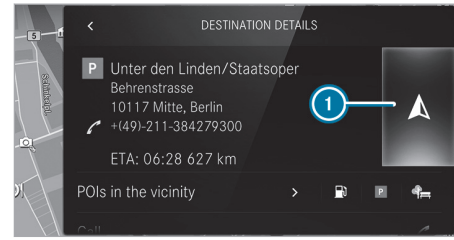

1 [▲] No route yet.
[⚲] A route has been mapped.

- Select [▲].
  The route to the destination is calculated. Route guidance begins.

  The route to the destination is calculated automatically and intelligently with Electric Intelligence. The route is updated during route guidance. The route with Electric Intelligence contains the required charging stations as intermediate destinations. The charging stations are determined taking into account the distance to be travelled and the estimated charging times.

or

- Select [⚲].
- Select Set as intermediate dest..
  The destination address is set as the next intermediate destination.

or

- Select Start new route guidance.
  The destination address is set as the new destination. The previous destination and the intermediate destinations are deleted. If necessary, the multimedia system sets charging stations as intermediate destinations. Route guidance to the new destination begins.

Switching on the Electric Intelligence route option

- Select [⚙] in the navigation menu.
- Select Advanced.
- Select Route.
- Activate Electric Intelligence.

Selecting route settings

- Select [⚙].
- Select Advanced.

- Select Route.
- Select the route type.
- Take traffic information into consideration with Dynamic route guidance [ ].
- Selecting route options with Avoid options.
- Activate Alternative routes.
  Alternative routes are calculated for every route.
- Activate Activate commuter route.
  If the requirements for a commuter route are met, the multimedia system automatically detects that the vehicle is on a commuter route. Route guidance begins without voice output.

Using map functions

Multimedia system:

[ ] ▸▸ Navigation

Increasing map scale

- When the map is shown, tap twice quickly with one finger on the media display.

or

- Move two fingers apart on the media display.

Decreasing map scale

- Tap with two fingers on the media display.

or

- Move two fingers together on the media display.

Moving the map

- Move one finger in any direction on the touchscreen.
- **To reset the map to the current vehicle position:** tap [ ] briefly.

Selecting map orientation

- Tap repeatedly on the [ ] compass symbol on the map.
  The view changes in the sequence 3D, 2D heading up to 2D north up.

Activating or deactivating motorway information

- Select [ ].
- Activate or deactivate Motorway information.

Using Mercedes me connect services

Requirements:

- There is an Internet connection. The [ ] symbol appears in the status line of the media display.
- Mercedes me connect is available.
- You have a user account for the Mercedes me Portal.
- The vehicle is connected with the user account and you have accepted the terms of use for the navigation services.

  If Mercedes me connect is active, the [ ] symbol is shown, for example, in the status line of the media display.

  If the transfer of the vehicle position is activated, the [ ] symbol appears.

  Further information can be found at: https://www.mercedes.me
- The Mercedes me connect service is available and has been activated.

Multimedia system:

[ ] ▸▸ Navigation

Displaying the traffic situation with Live Traffic Information

- Select [ ].
- Activate Traffic.
- Select Advanced.
- Select View.
- Select Map elements.
- Switch on Traffic incidents, Free-flowing traffic and Delay.
  If traffic information has been received, traffic events are displayed, e.g. road works, road closures and warning messages.

  The traffic delay is displayed for the current route. Traffic delays lasting a period of one minute or longer are taken into consideration.

Displaying hazard warnings with Car-to-X-Communication

If hazard warnings are available these are shown as symbols on the map. The display depends on the settings for the Traffic and Traffic incidents options.

- Set the options.
  If Traffic is switched off and Traffic incidents is switched on, the symbols are shown on the prospective route.

Displaying weather information and other map contents

ⓘ The Navigation Plus service is available and has been booked. The Weather service is activated.

▶ Select ⚙.

▶ Select Advanced.

▶ Select View.

▶ Select Map elements.

▶ Scroll up until the ONLINE MAP CONTENTS category appears.

▶ Switch on a service, e.g. Weather.
Current weather information is displayed on the navigation map, e.g. temperature or cloud cover.

Parking service

! **NOTE** Damage to the vehicle due to not observing the maximum permitted headroom clearance

If the vehicle height is greater than the maximum permitted headroom clearance, the roof and other parts of the vehicle may be damaged.

▶ Observe the signposted headroom clearance.

▶ If the vehicle height is greater than the permitted headroom clearance, do not enter.

▶ Observe the changed vehicle height with add-on roof equipment.

! **NOTE** Vehicle damage due to failure to observe local information and parking conditions

The data is based on the information provided by the respective service providers.

Mercedes-Benz does not guarantee the accuracy of the information provided in relation to the car park or parking area.

▶ Always observe the local information and conditions.

ⓘ The Navigation Plus service is available and has been booked. The Parking service is activated.

ⓘ This service is not available in all countries.

▶ Tap on P on the map.

▶ Select a parking option.
The map shows the parking options in the vicinity.

The following information is displayed (if available):

- Destination address, distance from current vehicle position and arrival time
- Information on the multi-storey car park/car park, for example:
  - Opening times
  - Parking charges
  - Current occupancy
  - Maximum parking time
  - **Maximum clearance height**
    The maximum clearance height shown by the parking service does not replace the need for observation of the actual circumstances.
- Available payment options (Mercedes pay, coins, bank notes, cards)
- Details on parking tariffs
- Number of available parking spaces
- Payment method (e.g. at parking meters)
- Services/facilities at the parking option
- Telephone number

Telephone

Telephony

Notes on telephony

⚠ **WARNING** Risk of distraction from operating integrated communication equipment while the vehicle is in motion

If you operate communication equipment integrated in the vehicle when driving, you could be distracted from the traffic situation. This could also cause you to lose control of the vehicle.

▶ Only operate this equipment when the traffic situation permits.

▶ If you cannot be sure of this, stop the vehicle whilst paying attention to road and traffic conditions and operate the equipment with the vehicle stationary.

WARNING Risk of accident from operating mobile communication equipment while the vehicle is in motion

Mobile communication devices distract the driver from the traffic situation. This can also cause the driver to lose control of the vehicle.

- As a driver, only operate mobile communication devices when the vehicle is stationary.
- As a vehicle occupant, use mobile communication devices only in the designated area, e.g. in the rear passenger compartment.

You must observe the legal requirements for the country in which you are currently driving when operating mobile communication equipment in the vehicle.

Bluetooth® connection:

The menu view and the available functions in the phone menu are partly dependent on the Bluetooth® profile of the mobile phone connected.

If the mobile phone supports these Bluetooth® profiles, the full range of features is available:

- PBAP (Phone Book Access Profile)
  - The mobile phone's contacts are automatically displayed on the multimedia system.
- MAP (Message Access Profile)
  - The message functions of the mobile phone can be used on the multimedia system.

Irrespective of this, Bluetooth® audio functionality can by used with any mobile device.

For information on the functionality of the mobile device to be connected, see the manufacturer's operating instructions.

Network connection:

In the following cases, calls may be interrupted while driving:

- there is insufficient network coverage in the area.
- you switch to a transmitting/receiving station in which no communication channel is free.
- the SIM card used is not compatible with the network available
- a mobile phone with "Twincard" is logged into the network with the second SIM card at the same time

The multimedia system supports calls in HD Voice® for improved speech quality. A requirement for this is that the mobile phone and the mobile phone network provider of the person you are calling support HD Voice®.

Depending on the quality of the connection, the voice quality may fluctuate.

Further information can be obtained from a Mercedes-Benz service centre or at: https://www.mercedes-benz-mobile.com/

Telephone menu overview

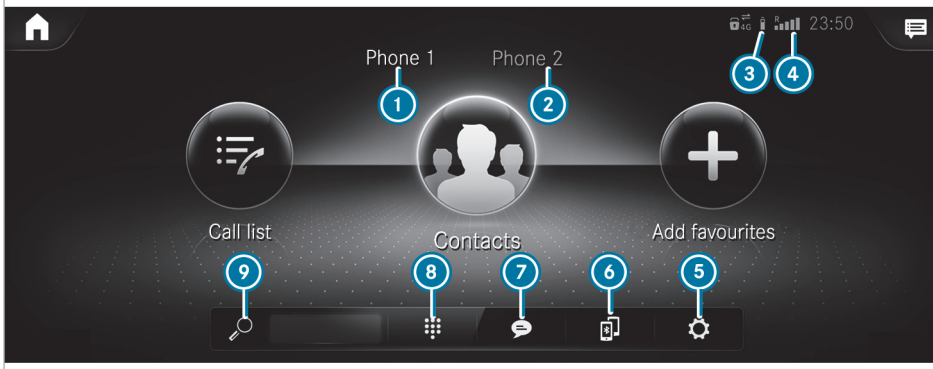

1. Bluetooth® device name of the currently connected mobile phone/the mobile phones
2. Bluetooth® device name of the currently connected mobile phone/the mobile phones (two phone mode)
3. Battery status of the connected mobile phone
4. Signal strength of the mobile phone network
5. Options
6. Device manager
7. Messages
8. Numerical pad
9. Contact search

Telephony operating modes overview

Depending on the equipment, the following telephone operating modes are available:

- One mobile phone is connected to the multimedia system via Bluetooth®.
- Two mobile phones are connected with the multimedia system via Bluetooth® (two phone mode).
  - You can use all the functions of the multimedia system with the mobile phone in the foreground.
  - You can receive incoming calls and messages with the mobile phone in the background.

    You can interchange the mobile phone in the foreground and background.

Connecting a mobile phone

Requirements

- Bluetooth® is activated on the mobile phone (see the manufacturer's operating instructions).
- Bluetooth® is activated on the multimedia system.

Multimedia system:

→ [⌂] ▸▸ Phone

Searching for a mobile phone

▶ Select [📱].

▶ Select Connect new device.

Connecting a mobile phone

Authorisation takes place using Secure Simple Pairing.

▶ Select a mobile phone.
A code is displayed in the multimedia system and on the mobile phone.

▶ If both codes match, confirm the code on the mobile phone.

Functions in the Telephony menu

The functions available in the Telephony menu include the following:

- Making calls, e.g.:
  - Accepting a call
  - End call
  - Create conferen. call
  - Accepting or rejecting a waiting call
- Managing contacts, e.g.:
  - Downloading mobile phone contacts
  - Editing the format of a contact's name
  - Saving contacts in the vehicle
- Receiving and sending messages, e.g.:
  - Using the read-aloud function
  - Dictating a new message

Overview of Smartphone Integration

With Smartphone Integration, you can use certain functions on your mobile phone via the multimedia system display.

Only one mobile phone at a time can be connected via Smartphone Integration to the multimedia system. Also for use with two phone mode with Smartphone Integration, only one additional mobile phone can be connected using Bluetooth® with the multimedia system.

The full range of functions for Smartphone Integration is only possible with an internet connection. The appropriate application must be downloaded on the mobile phone to use Smartphone Integration. The mobile phone must be switched on and connected to a USB port with the symbol on the multimedia system using a suitable cable.

Apps for Smartphone Integration

- Apple CarPlay®
- Android Auto

You can start Apple CarPlay® or Android Auto using the Apps menu.

Alternative: If an application is active via Smartphone Integration (e.g. when music is being played or route guidance is active), you can call up the active application using the RADIO MEDIA, NAVI MAP or TEL application buttons.

You can end Smartphone Integration by disconnecting the connecting cable between the mobile phone and multimedia system.

ⓘ Mercedes-Benz recommends disconnecting the connecting cable only when the vehicle is stationary.

When using Android Auto or Apple CarPlay®, certain vehicle data is transferred to the mobile phone. This enables you to get the best out of selected mobile phone services. Vehicle data is not directly accessible.

The following system information is transmitted:

- Software release of the multimedia system
- System ID (anonymised)

The transfer of this data is used to optimise communication between the vehicle and the mobile phone.

To do this, and to assign several vehicles to the mobile phone, a vehicle identifier is randomly generated.

This has no connection to the vehicle identification number (VIN) and is deleted when the multimedia system is reset (→ page 190).

The following driving status data is transmitted:

- The transmission position engaged
- The distinction between parked, standstill, rolling and driving
- The day/night mode of the instrument cluster

The transfer of this data is used to alter how content is displayed to correspond to the driving situation.

The following position data is transmitted:

- Coordinates
- Speed
- Compass direction
- Acceleration direction

This data is only transferred while the navigation system is active, in order to improve it (e.g. so it can continue functioning when in a tunnel).

Web browser overview

The web browser is launched on the home screen after selecting Apps via Browser.

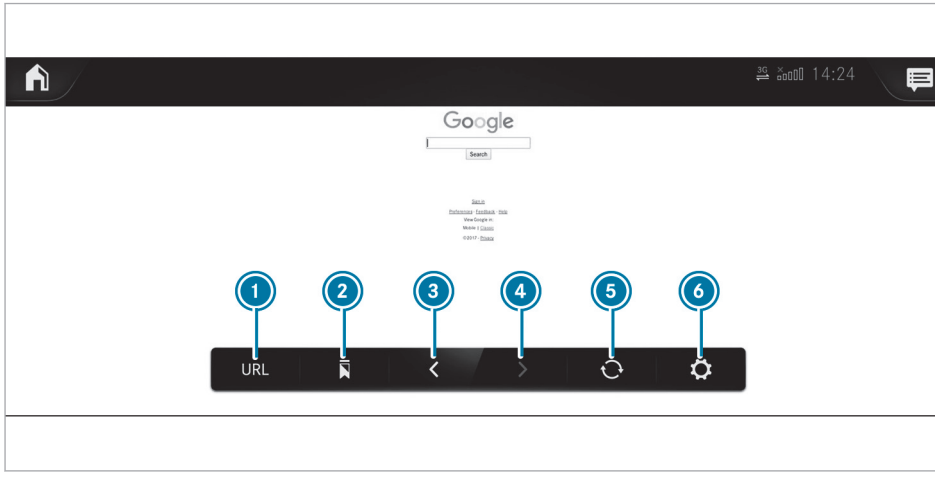

1. URL entry
2. Bookmarks
3. Previous website
4. Next website
5. Refresh/stop
6. Options

ⓘ Some functions are country-dependent.

ⓘ Websites cannot be shown while the vehicle is in motion.

ⓘ Additional data volume is required for the use of the web browser. Via the "Internet in the Car" service you can purchase this data volume for a fee **directly from the mobile phone network provider Vodafone**.

Radio and media

Overview of the symbols and functions in the media menu

Symbol	Designation	Function
▶	Play	Select to start or continue playback.
❚❚	Pause	Select to pause the playback.
	Repeat a track	Select to repeat the current track or the active playlist. • Select once: the active playlist is repeated. • Select twice: the current track is repeated. • Select three times: the function is deactivated.

Symbol	Designation	Function
	Random playback	Select to play back the tracks in random order.
/	Back/forward	Select to skip to the previous or to the next track.
	Options	Select to show additional options.
	Categories	Select to show or search through available categories (e.g. playback lists, albums, artists, etc.).
	Search	Select to search in the active menu. You can search for artists or genres, for example.
	Settings	Select to make settings.
	Home	Select to return to the home screen.
	Full screen	Select to switch to full screen mode.

The following functions and settings are available in the media menu:

- Connecting external data storage media with the multimedia system (e.g. using USB or Bluetooth®)
- Playing back audio files

Authorising Bluetooth® audio equipment for media playback

Requirements:

- Bluetooth® is activated on the multimedia system and audio equipment .
- The audio equipment supports the Bluetooth® audio profiles A2DP and AVRCP.
- The audio equipment is "visible" for other devices.

Multimedia system:

Media ▸▸ Bluetooth ▸▸

Using Bluetooth® Audio, you can play back music files via the MBUX multimedia system from an external data storage medium, e.g. your smartphone.

▶ To play back audio files using the multimedia system, authorise the external data storage medium on the MBUX multimedia system.

Authorising a new Bluetooth® audio device

▶ Select Connect new device.

▶ Select an audio device.
Authorisation starts. A code is displayed on the multimedia system and on the mobile phone.

▶ If the codes are identical, confirm on the audio equipment.

▶ Select Only as Bluetooth audio device.
The Bluetooth® audio equipment is connected with the multimedia system.

Connecting previously authorised Bluetooth® audio equipment

▶ Select a Bluetooth® audio device from the list.
The connection is established.

Overview of the symbols and functions in the radio menu

Symbol	Designation	Function
	Home	Select to return to the home screen.
	Messaging	Select to call up messaging.
/	Back/forward	Select to skip to the previous or to the next station.
	Settings	Select to show further options. Settings can be made to the following additional functions, for example: • Navigation and traffic announcements • Frequency fix function • Radio additional text • Emergency warnings The setting options are country-dependent.
	Full screen	Select to switch to the DAB slide show. This function is not available in all countries.
	Mute function	Select to switch off the sound.
	Storing radio stations	Select to save a radio station in the station list.
	Station list	Select to display the station list.
	Search	Select to browse the active menu, for example, by artist or genre.

Depending on the frequency band selected, different functions are available to you.

Select the desired frequency band in the radio menu head runner.

Additional functions of TuneIn Radio

ⓘ A relatively large volume of data can be transmitted when using TuneIn Radio.

Symbol	Designation	Function
	Settings	The following additional settings are available in the TuneIn Radio menu: • Selecting stream • Logging on to or out of the TuneIn account
	Favourites	Select during playback to save the station currently set as a favourite.

Symbol	Designation	Function
▶ / ⏸	Play/Pause	Select to start, stop or continue playback.
	Browse	Select to choose a category and then a radio station.

Sound settings

Overview of functions in the Sound menu

The sound system is available for all functions in the radio and media modes. The settings, for example for the equaliser, affect the playback of all media sources.

The following functions are available:

- Equaliser
  - Treble, mid-range and bass
- Balance and fader
- Volume
  - Automatic volume adjustment

Notes on loading guidelines

WARNING Risk of injury from unsecured objects in the vehicle

When objects are unsecured or inadequately secured, they can slip, tip over or be thrown about, striking vehicle occupants.

This also applies to:

- luggage or loads
- seats which have been removed and are being transported in the vehicle in an exceptional case

There is a risk of injury, particularly in the event of braking manoeuvres or abrupt changes in direction.

▶ Always stow objects in such a way that they cannot be tossed about.

▶ Before travelling, secure objects, luggage or load to prevent them slipping or tipping over.

▶ When a seat is removed, keep it preferably outside the vehicle.

WARNING Risk of accident due to incorrectly placed load

The centre of gravity of the load may be too high and/or too far back.

This can significantly impair the driving, steering and braking characteristics.

▶ Always ensure that the centre of gravity of the load is between the axles and as low as possible near the rear axle.

WARNING Risk of accident due to exceeding the permissible wheel/axle loads or the gross vehicle weight

The driving characteristics, as well as steering and braking, may be greatly impaired. Overloaded tyres may overheat and burst as a consequence.

▶ When transporting a load, always observe the permissible wheel loads, axle loads and the maximum permissible gross mass for the vehicle (including occupants).

WARNING Risk of injury if unsuitable climbing aids are used

In the event that you use openings in the bodywork or attachments as steps, you could:

- Slip and/or fall.
- Damage the vehicle and thus slip and fall.

▶ Always use non-slip, stable climbing aids, e.g. a suitable ladder.

NOTE Damage caused by the use of openings in the bodywork or detachable part as a step

Using the lower guide of the sliding door (carriage) as a step can damage the trim and/or mechanism of the sliding door.

▶ Do not use the guide of the sliding door (carriage) as a step.

If you are using a roof luggage rack, please note the maximum roof load and the maximum load capacity of the roof luggage rack. (→ page 253)

The handling characteristics of your vehicle are dependent on the load distribution.

Therefore, please observe the following notes when loading:

- The load must not protrude above the upper edge of the seat backrests.
- If possible, always transport the load in the load compartment.
- Fasten the load to the lashing eyelets and distribute the load evenly among them.
- If available, use a load protection net to secure the load (→ page 208).
- Use lashing eyelets and fastening materials which are suitable for the weight and size of the load.

Observe the operating instructions of the manufacturer when using load securing aids or lashing material and the notes on their expiration dates.

In the following cases, load securing aids or lashing materials are worn out, should not be used and must be replaced:

- If identification is missing or illegible
- If there is cord breakage or damage to load-bearing seams or other traces of cracking

- If there are cuts, holes, deformations, crushed areas or other damage
- If there is damage to clamping elements or fasteners

If the luggage compartment floor or loading area has been damaged in an accident, have the lashing eyelets and the lashing material checked at a qualified specialist workshop.

Even if you adhere to all the loading guidelines, an increased load increases the risk of injury in the event of an accident.

Before loading

Check and adjust the tyre pressure as necessary (→ page 234).

When loading

Observe the following when loading the vehicle:

- Never exceed the permissible axle load or the vehicle's permissible gross mass.

  The vehicle's kerb weight is increased if accessories or optional equipment are fitted. This reduces the maximum payload.
- Observe the notes on load distribution (→ page 205).
- Observe the notes on load securing (→ page 206) and the legal requirements of the country in which you are currently driving.
- Observe the information on the carrier systems (→ page 211).

After loading

Observe the following after loading the vehicle:

- Check that the luggage and/or load is secure before every journey and at regular intervals on long trips.
- Close all doors and the tailgate.
- Adjust the range of the headlamps according to the vehicle load (→ page 103).
- Adjust the tyre pressure to the vehicle load (→ page 234).
- Adapt your driving style to the vehicle load.

Notes on distributing the load within the vehicle

! **NOTE** Damage to the floor covering due to uneven loading

Excessive point loading on the load compartment floor or on the load area can negatively affect the driving characteristics and could damage the floor covering.

▶ Distribute the load evenly. When doing so, ensure that the overall centre of gravity of the load is always as low and close to the centre as possible and between the axles near the rear axle.

Observe the following notes:

- Always transport loads in the load compartment and with the seat backrests folded up and properly locked in position.
- Always place the load against the front or rear seat backrests.
- Move large and heavy loads as far as possible towards the front of the vehicle against the back of the front or rear seats. Stow loads flush with the rear or front seats.
- Additionally secure the load with suitable load securing aids or lashing material.
- The load must not protrude above the upper edge of the seat backrests.
- Transport loads behind seats that are not occupied.
- If the rear bench seat is not occupied, insert the seat belts crosswise into the seat belt buckle of the opposite seat belt.

Load compartment variants

You can vary the load compartment according to your transportation requirements as follows:

- by folding the rear seat backrests or rear bench seat backrests forward to the table position
- by folding the rear seats forwards
- by folding the rear bench seat forwards
- by removing the rear seats and/or the rear bench seat

You will find information about rear seats and the rear bench seats in the "Notes on the Rear Seats" section (→ page 75).

Securing loads

Notes on load securing

NOTE Damage to the vehicle if the maximum loading capacity of the lashing points is exceeded

If you combine various lashing points to secure a load, always take the maximum loading capacity of the weakest lashing point into account.

During maximum full-stop braking, forces may act which can multiply the weight of the load.

- ▶ Always use several lashing points to distribute and spread the load.
- ▶ Distribute the load on the lashing points evenly.

Observe the information relating to the maximum loading capacity of the lashing points (→ page 252).

As the driver, you are responsible for ensuring the following:

- The load is secured against slipping, tipping, rolling or falling off.

  Take usual traffic conditions as well as swerving or full brake application and bad roads into account.
- The applicable requirements and guidelines relating to load-securing practices are met.

  If this is not the case, this may constitute a punishable offence, depending on local legislation and any ensuing consequences. Observe country-specific laws.

Make sure that the load is secure before every journey and at regular intervals during a long journey. Adjust the load securing as necessary. Information on how to secure loads correctly can be obtained from the manufacturers of the load securing aids or lashing material for load securing, for example.

Also observe the notes on loading guidelines (→ page 204).

When securing loads, observe the following:

- Fill spaces between the load and the load compartment walls or wheel wells. For this purpose, use rigid load securing aids, such as chocks, wooden fixings or padding.
- Attach secured and stabilised loads in all directions.

  Use the lashing points or the tie-down eyes and guide rails in the rear compartment.

  Only use lashing materials, such as lashing nets and lashing straps, which have been tested in accordance with current standards (e.g. DIN EN). Always use the lashing points closest to the load and pad sharp edges.

ⓘ You can obtain lashing material tested in accordance with current standards (e.g. DIN EN) from a specialist company or from a qualified specialist workshop.

Note on the lashing points and tie-down eyes on the load compartment floor for passenger vehicles (vehicle category M1)

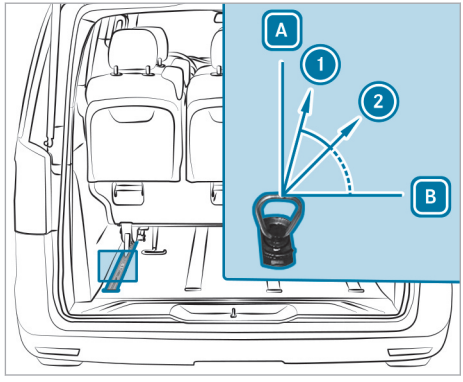

Example: lashing angle for best load security

A Vertical to the load compartment floor

B Load compartment floor

1 Direction of pull with 75° lashing angle

2 Direction of pull with 45° lashing angle

The lashing angle is the angle formed between the load compartment floor and the lashing material. For optimum load securing in accordance with standard ISO 27955 the lashing angle must be between 45° 2 and 75° 1. The maximum nominal tensile load of 350 daN for the tie-down eyes in the load compartment floor or in the guide rails may not be exceeded.

Overview of lashing points

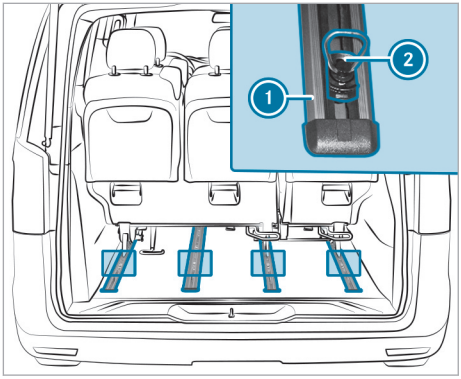

Example: variable lashing points in the guide rails

1 Guide rails

2 Tie-down eye

Do not attempt to modify or repair the lashing points, tie-down eyes or lashing materials. Read the information on qualified specialist workshops (→ page 22).

Fitting and removing tie-down eyes

WARNING Risk of injury due to incorrectly installed tie-down eyes

If the tie-down eyes are not correctly installed, they can slip or tear out.

This may cause objects, luggage or the load to slip, tip over or be thrown about the vehicle interior, striking vehicle occupants.

- Make sure that the tie-down eyes are correctly installed and do not move.

- Observe the notes on the loading guidelines and on securing loads (→ page 204).

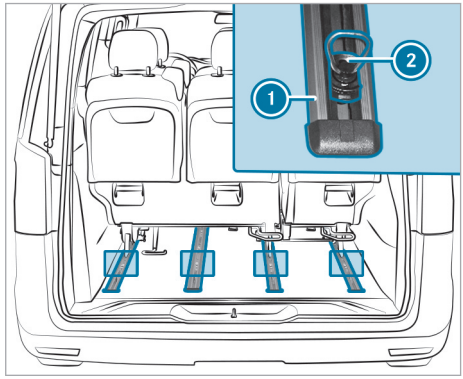

Example: guide rails

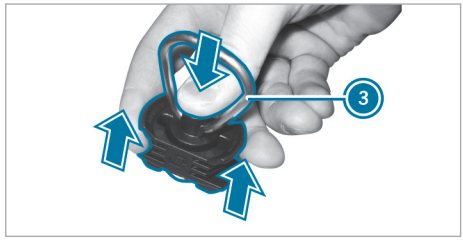

Tie-down eyes for guide rails

Fitting

- Turn metal retaining ring 3 so that it is parallel to the long axis of tie-down eye 2 as illustrated.
  The locking pin can only be pushed down sufficiently and allow the tie-down eye to be fitted, moved or removed, if the metal retaining ring is parallel to the long axis of the tie-down eye.
- Hold tie-down eye 2 between your forefinger and middle finger as illustrated, and place your thumb through metal retaining ring 3 and on the central pressure point.
- Use your thumb to push the locking pin down as far as it will go.
- Push tie-down eye 2 near the load using the notches on guide rail 1, and move it approximately 12 mm.
- Remove your thumb from the pressure point and slide tie-down eye 2 until it engages.
- Turn metal retaining ring 3 so that it is perpendicular to the long axis of tie-down eye 2.
  The locking pin cannot be pushed down far if the metal retaining ring is perpendicular to the long axis of the tie-down eye. This prevents the

tie-down eye from being released unintentionally, e.g. if the tie-down eye is stepped on

- Check that tie-down eye ② is seated correctly.
  The tie-down eye cannot be moved.

Removing

- Turn metal retaining ring ③ so that it is parallel to the long axis of tie-down eye ②.
- Grip tie-down eye ② as described above under fitting and use your thumb to push the locking pin down as far as it will go.
- Slide tie-down eye ② and pull it up and out through the notch of guide rail ①.

Load securing aid

Removing or fitting a load protection net

⚠ WARNING Risk of injury or death due to objects being poorly secured

The load protection net alone cannot restrain or secure heavy objects, luggage or heavy loads.

You could be hit by an unsecured load during sudden changes in direction, braking or in the event of an accident.

- Always stow objects in such a way that they cannot be thrown about the vehicle.
- Secure objects, luggage or loads against slipping or tipping over, e.g. by using lashing material, even when you are using the load protection net.

⚠ WARNING Risk of injury due to sitting behind a load protection net

Vehicle occupants can be pressed against the load protection net. There is a risk of injury!

- Never allow vehicle occupants to sit behind the load protection net.

The load protection net partitions the load compartment. It protects vehicle occupants from light objects and/or luggage slipping or tipping over.

You can install the load protection net at an angle behind the front seats or behind the first row of rear seats.

- Observe the notes on securing loads (→ page 206).

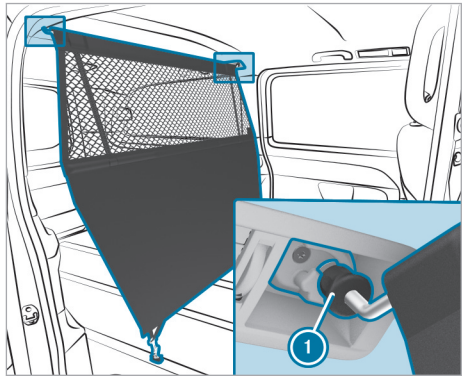

Upper retainer

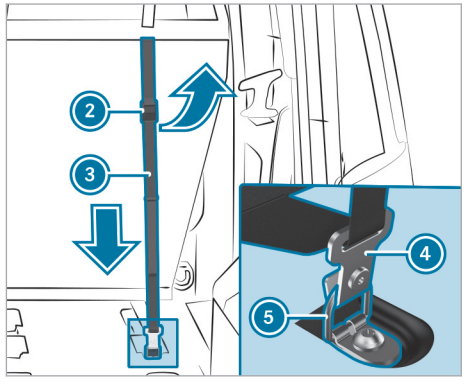

Floor anchorage (example: secured tie-down eye)

Fitting

- Remove the luggage compartment partition if necessary (→ page 209).
- Clip the load protection net into upper retainers ① in such a way that tensioning straps ③ face the rear of the vehicle.
- Fit tie-down eyes ⑤ into the guide rails close to the rear seat legs (→ page 207). Position them at least 5 cm from the seat legs to allow subsequent movement of the rear seat.
- Check that tie-down eyes ⑤ are seated correctly.
  The tie-down eyes ⑤ should not move.
- Clip the hooks ④ on the tensioning straps ③ into the tie-down eyes ⑤.
- Fold the tensioning element ② up.

- Pull the loose end of the tensioning straps ③ down in the direction of the arrow until tensioning straps ③ are tight.
- Fold tensioning element ② down to achieve the final tension on the straps.
- If necessary, fit the luggage compartment partition (→ page 209).
- After travelling a short distance, check that the load protection net is taut, and retighten it if necessary.

Removing

- Remove the luggage compartment partition if necessary (→ page 209).
- Fold tensioning element ② up.
  Tensioning straps ③ are slack.
- Unclip hooks ④ of tensioning straps ③ from tie-down eyes ⑤ at the bottom.
- Unclip the load protection net from upper retainers ①.
- If necessary, remove tie-down eyes ⑤ (→ page 207).
- If necessary, fit the luggage compartment partition (→ page 209).
- Roll up the load protection net and fasten it, still rolled up, using the Velcro fasteners.

Adjusting the front seat with the load protection net fitted

- Fold tensioning element ② on straps ③ upwards.
  The load protection net slackens.
- Correctly adjust the front seat.
- Re-tension the load protection net.

Using the luggage compartment partition

WARNING Risk of injury from unsecured objects in the vehicle

When objects are unsecured or inadequately secured, they can slip, tip over or be thrown about, striking vehicle occupants.

This also applies to:

- luggage or loads
- seats which have been removed and are being transported in the vehicle in an exceptional case

There is a risk of injury, particularly in the event of braking manoeuvres or abrupt changes in direction.

- Always stow objects in such a way that they cannot be tossed about.
- Before travelling, secure objects, luggage or load to prevent them slipping or tipping over.
- When a seat is removed, keep it preferably outside the vehicle.

WARNING Risk of accident or injury when the luggage compartment partition is not locked in position

The luggage compartment partition can come loose when driving and be thrown about the vehicle interior.

- Fit the luggage compartment partition as described.
- After fitting the luggage compartment partition, always make sure that the luggage compartment partition is locked and folded down.

NOTE Damage to the luggage compartment partition due to heavy loads

If the luggage compartment partition is loaded with too much weight, the fixture points and the luggage compartment partition may be damaged.

- Do not load more than 50 kg on the luggage compartment partition.

The luggage compartment partition is only secured correctly when both levers are locked.

- Comply with the loading guidelines (→ page 204).

Opening the stowage compartments

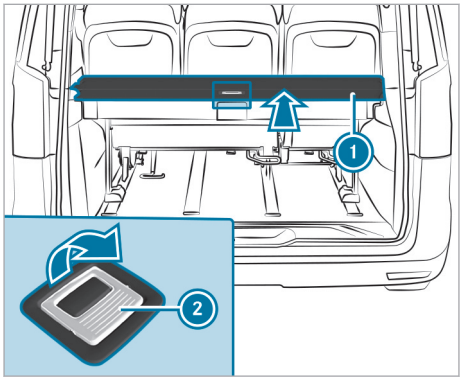

- Pull handle ② in the direction of the arrow. Cover ① folds upwards in the middle.
- Slide cover ① to the stop in the direction of the arrow.

Closing the stowage compartments

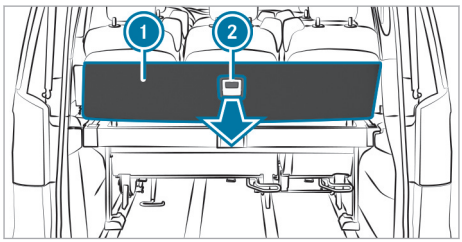

- Pull cover ① on handle ② in the direction of the arrow.
- Push cover ① down in the middle until it is fully closed.

Folding up the luggage compartment partition to an angle of 70°

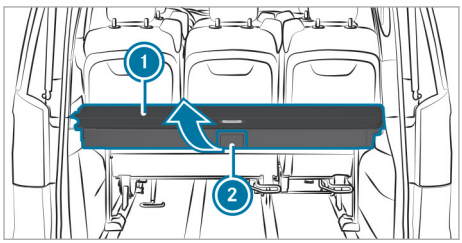

- Pull handle ② in the direction of the arrow. Luggage compartment partition ① is released.
- Fold up luggage compartment partition ①.

Make sure that luggage compartment partition ① is always folded down when the vehicle is moving.

Folding down the luggage compartment partition

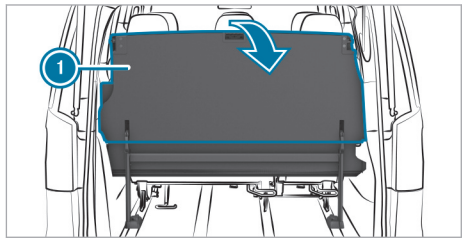

- Fold down luggage compartment partition ① until it engages. Luggage compartment partition ① is locked.

Removing the luggage compartment partition

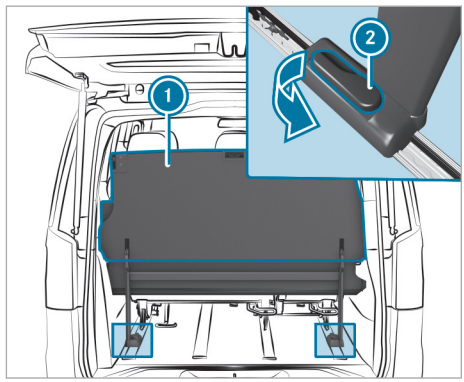

- Fold up luggage compartment partition ①.
- Swing levers ② inwards. Luggage compartment partition ① is released.
- Remove luggage compartment partition ①.

Fitting the luggage compartment partition

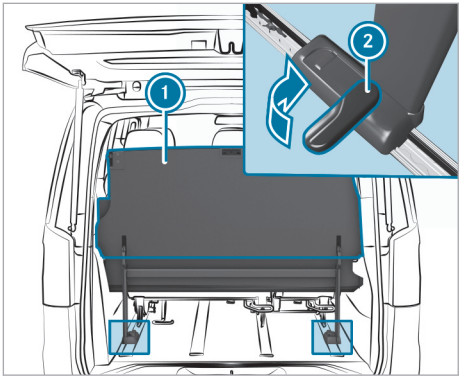

If possible, fit luggage compartment partition ① with the help of another person.

- ▶ Place luggage compartment partition ① into the vehicle at an angle.
- ▶ Rotate luggage compartment partition ① in the vehicle and insert it into the guide rails.

The guide rails have triangular markings at the place to be inserted which must be at the same height as levers ②.

- ▶ Swing levers ② outwards.
  Luggage compartment partition ① is locked.
- ▶ Fold luggage compartment partition ① down.

Carrier systems

Notes on carrier systems

⚠ WARNING Risk of accident due to exceeding the maximum roof load

The vehicle centre of gravity and the usual driving characteristics as well as the steering and braking characteristics alter.

If you exceed the maximum roof load, the driving characteristics, as well as steering and braking, will be greatly impaired.

- ▶ Never exceed the maximum roof load and adjust your driving style.

You can find information on the maximum roof load under "Lashing points and carrier systems" (→ page 252).

! NOTE Damage due to exceeding the maximum permissible roof load

If the weight of the roof luggage, including the roof luggage rack, exceeds the maximum permissible roof load, this can cause damage to the vehicle.

- ▶ Do not exceed the maximum permissible roof load.
- ▶ Arrange the supporting feet of the roof luggage rack at an even distance from each other.
- ▶ Install the basic carrier bars for rail in front of and behind the mid-section support.

! NOTE Damage to the threaded holes of the roof luggage rack due to an excessively high tightening torque

An excessively high tightening torque or an insufficient screw-in depth can cause damage to the thread of the roof luggage rack's threaded holes.

- ▶ Tighten the screws to a maximum torque of 10 Nm.
- ▶ Comply with the minimum screw penetration of four revolutions in the thread.
- ▶ To avoid damage to the vehicle, use roof and rear luggage racks that have been tested and approved for Mercedes-Benz.

! NOTE Damage to the vehicle due to not observing the maximum permitted headroom clearance

If the vehicle height is greater than the maximum permitted headroom clearance, the roof and other parts of the vehicle may be damaged.

- ▶ Observe the signposted headroom clearance.
- ▶ If the vehicle height is greater than the permitted headroom clearance, do not enter.
- ▶ Observe the changed vehicle height with add-on roof equipment.

You can install a roof luggage rack on the roof and, for example, a rear bicycle rack on the tailgate.

Install the cover caps of the securing thread after removing the roof luggage rack.

If you have installed a rear luggage rack on the tailgate, the additional weight will restrict the assistance offered by the pneumatic springs when you open the tailgate. You will then need more force to open the tailgate. At low outside temperatures below freezing point, you should provide additional support for the tailgate after opening it in order to prevent it from lowering unintentionally.

Notes on maintenance

ENVIRONMENTAL NOTE Environmental pollution due to disposal in a non-environmentally-friendly manner

If, for operating reasons, individual maintenance work is carried out under your own direction, the environmental protection requirements must be observed. When disposing of service products, e.g. coolant, you must comply with the legal requirements. This also applies to all parts that have been in contact with operating fluids.

- ▶ Dispose of empty containers, cleaning cloths and care products in an environmentally responsible manner.
- ▶ Observe the instructions for care products.

When working on the vehicle, comply with all safety regulations, such as the operating instructions, regulations concerning hazardous materials, environmental protection regulations, health and safety regulations and accident prevention regulations.

ⓘ You must secure the vehicle on jack stands of sufficient load-bearing capacity if work is being carried out underneath the vehicle.

Please also refer to the notes about qualified specialist workshops (→ page 22).

The scope and regularity of the inspection and maintenance work primarily depend on the often diverse operating conditions.

You can obtain further information concerning the servicing of your vehicle from a qualified specialist workshop, e.g. a Mercedes-Benz service centre.

You will find information about operating fluids approved for Mercedes-Benz and filling quantities under "Operating Fluids and Filling Quantities" (→ page 249).

Observe the information under "Mercedes-Benz GenuineParts" (→ page 16).

Service interval display

Service interval display function

The ASSYST PLUS service interval display on the instrument cluster display provides information on the remaining time or distance before the next service due date.

Under arduous operating conditions or if the vehicle is subjected to increased loads, the ASSYST PLUS service interval display may shorten the service interval.

You can obtain further information concerning the servicing of your vehicle from a qualified specialist workshop.

Displaying the service due date

Requirements:

- The vehicle is switched on.

On-board computer:

→ Service ▸▸ ASSYST PLUS

The next service due date is displayed.

▶ **To exit the display:** press the OK or ⮌ steering-wheel button.

Information on regular maintenance work

NOTE Premature wear through failure to observe service due dates

Maintenance work which is not carried out at the right time or incompletely can lead to increased wear and damage to the vehicle.

- ▶ Adhere to the prescribed service intervals.
- ▶ Always have the prescribed maintenance work carried out at a qualified specialist workshop.

NOTE Irreparable damage to the high-voltage battery due to maintenance work not being carried out

The high-voltage battery is subject to wear. Maintenance work which is not carried out in time can lead to irreparable damage to the high-voltage battery.

- ▶ Always observe the warning messages about the high-voltage battery and immediately consult a qualified specialist workshop.
- ▶ Have the necessary maintenance work on the high-voltage battery carried out at a qualified specialist workshop.

Notes on special service requirements

The prescribed service interval is based on normal vehicle use. Perform maintenance work more often than prescribed if the vehicle is operated under arduous operating conditions or increased loads.

Arduous operating conditions include:

- Frequent operation in mountainous terrain or on poor road surfaces
- Operation in particularly dusty conditions and/or if air-recirculation mode is frequently used

In these or similar operating conditions, have the interior air filter changed more frequently.

Check the tyres more frequently if the vehicle is operated under increased stress. You can obtain further information at a qualified specialist workshop.

Non-operational times with the battery disconnected

The ASSYST PLUS service interval display can calculate the service due date only when the battery is connected.

▶ Display and note down the service due date on the instrument cluster before disconnecting the battery (→ page 213).

Engine compartment

Opening and closing the bonnet

⚠ WARNING Risk of accident due to driving with the bonnet unlocked

The bonnet may open and block your view.

▶ Never release the bonnet when driving.

▶ Before every trip, ensure that the engine bonnet is locked.

⚠ WARNING Risk of accident and injury when opening and closing the bonnet

The bonnet may suddenly drop into the end position.

There is a risk of injury for anyone in the engine bonnet's range of movement.

▶ Do not open or close the bonnet if there is a person in the bonnet's range of movement.

⚠ WARNING Risk of injury due to moving parts

Components in the engine compartment can continue to run or start unexpectedly even when the ignition is switched off.

Observe the following before performing tasks in the engine compartment:

▶ Switch off the ignition.

▶ Never touch the danger zone surrounding moving components, e.g. the rotation area of the fan.

▶ Remove jewellery and watches.

▶ Keep items of clothing and hair away from moving parts.

⚠ WARNING Risk of burns from hot components in the engine compartment

Certain components in the engine compartment can be very hot, e.g. the drive system and the cooler.

▶ Allow the drive system to cool down and touch only the components described below.

! NOTE Damage to bonnet or windscreen wipers when opening the bonnet

If the windscreen wipers have been folded back from the windscreen when the bonnet is opened, the windscreen wipers or the bonnet may be damaged.

▶ Ensure that the windscreen wipers have not been folded back from the windscreen.

Opening the bonnet

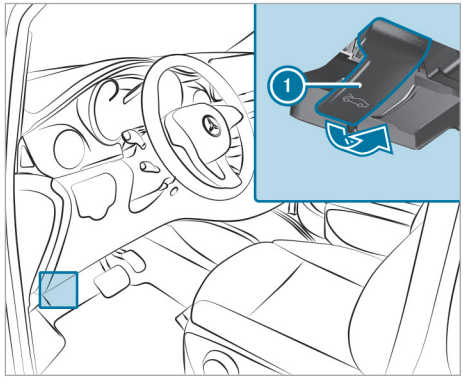

▶ Pull handle ① to release the bonnet.

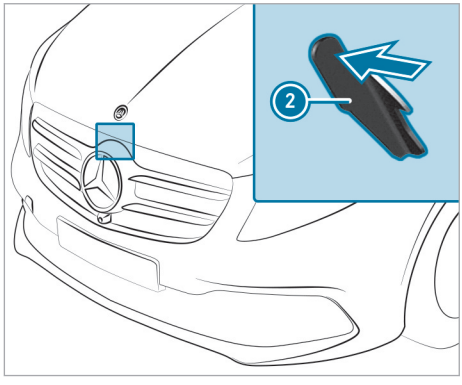

▶ Reach into the gap, push lever ② of the bonnet catch to the left and lift the bonnet.
When the bonnet has opened around 40 cm, it will be automatically opened and held by the gas pressure spring dampers.

Closing the bonnet

NOTE Damage to the bonnet due to pressing it closed manually

Pushing the bonnet closed with your hands could damage it.

▶ To close the bonnet, let it drop from the specified height.

▶ Lower the bonnet and let it fall from a height of approximately 30 cm, applying a little force as you let it go.

▶ If the bonnet remains slightly open, open it again and let it fall, applying slightly more force as you let it go, until it engages.

Checking/topping up the coolant

WARNING Risk of fire- and injury from antifreeze

If antifreeze comes into contact with hot component parts in the engine compartment, it may ignite.

▶ Allow the drive system to cool down before you top up the antifreeze.

▶ Make sure that no antifreeze spills out next to the filler opening.

▶ Thoroughly clean the antifreeze from component parts before starting the vehicle.

WARNING Risk of scalding from hot coolant

You may scald yourself if you open the cap when the drive system is at normal operating temperature.

▶ Allow the engine to cool down before opening the cap.

▶ When opening the cap, wear protective gloves and safety glasses.

▶ Open the cap slowly to release pressure.

Check and top up the coolant only when the vehicle is stationary and in a horizontal position and the drive system has cooled down. The coolant temperature must be below 50°C.

WARNING Risk of burns from hot components in the engine compartment

Certain components in the engine compartment can be very hot, e.g. the drive system and the cooler.

▶ Allow the drive system to cool down and touch only the components described below.

Coolant contains glycol and is therefore poisonous.

▶ Observe the information under "Operating fluids and capacities" (→ page 250).

NOTE Paintwork damage due to coolant

If coolant gets on painted surfaces, the paintwork can be damaged.

▶ Add coolant carefully.

▶ Remove spilled coolant.

Regularly check the drive cooling system and the heating system for leaks. If there is a loss of coolant, have the cause determined and rectified in a qualified specialist workshop without delay.

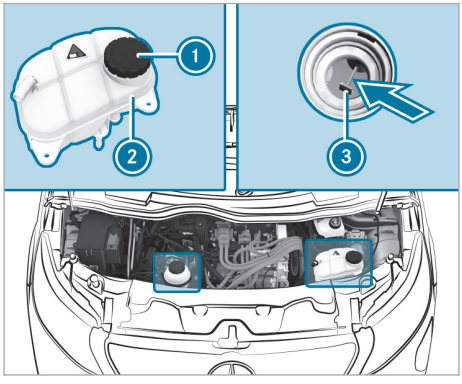

Example: cap and coolant expansion reservoir

Checking the coolant level

The vehicle is equipped with two coolant expansion reservoirs.

- ▶ Slowly turn cap ① of coolant expansion reservoir ② half a turn anti-clockwise and allow overpressure to escape.
- ▶ Turn cap ① further and remove it.

The coolant level will be correct in the following cases:

- If the drive system is cold, up to marker bar ③
- If the drive system is warm, up to 1.5 cm over marker bar ③

Topping up the coolant

Only use coolant approved for Mercedes-Benz to avoid damaging the drive cooling system.

- ▶ Refer to the information on coolant (⟶ page 250).
- ▶ Refill the coolant up to the marker bar ③ in the filler opening of the coolant expansion reservoir ②.
- ▶ Replace cap ① and turn clockwise to tighten.
- ▶ Start the drive system.
- ▶ Set the temperature in the vehicle interior to the maximum output on the operating unit of the climate control.
- ▶ After about five minutes, switch off the drive system again and allow it to cool down.
- ▶ Check the coolant level again and top up the coolant if necessary.

Filling up the windscreen washer system

⚠ WARNING Risk of fire and injury from windscreen washer concentrate

Windscreen washer concentrate is highly flammable.

- ▶ Avoid fire, naked flames, smoking and the creation of sparks when using windscreen washer concentrate.

⚠ WARNING Risk of burns from hot components in the engine compartment

Certain components in the engine compartment can be very hot, e.g. the drive system and the cooler.

- ▶ Allow the drive system to cool down and touch only the components described below.

! NOTE Damage to the exterior lighting due to unsuitable windscreen washer fluid

Unsuitable windscreen washer fluids may damage the plastic surface of the exterior lighting.

- ▶ Only use windscreen washer fluids that are also suitable for use on plastic surfaces, e.g. MB SummerFit or MB WinterFit.

Topping up the washer fluid

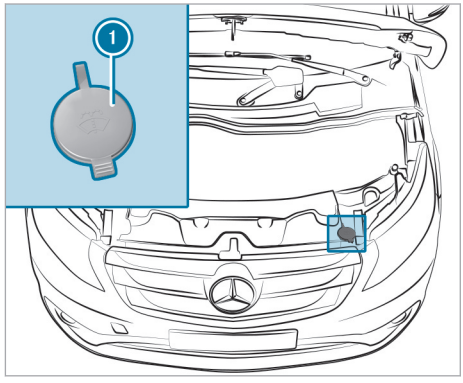

Washer fluid reservoir (example)

- ▶ Observe the notes on windscreen washer fluid (⟶ page 250).
- ▶ Pull cap ① upwards by the tab.
- ▶ Top up the washer fluid.

▶ Push cap ① onto the filler opening until it audibly engages.

Cleaning and care

Notes on washing the vehicle in an automatic car wash

⚠ **WARNING** Risk of an accident due to reduced braking power after washing the vehicle

Braking efficiency is reduced after washing the vehicle.

▶ After the vehicle has been washed, brake carefully while paying attention to the traffic conditions until braking power has been fully restored.

! **NOTE** Damage to the vehicle due to automatic braking

When the following functions are activated, the vehicle brakes automatically in certain situations:

- Active Brake Assist
- Active Distance Assist DISTRONIC
- HOLD function

To avoid damage to the vehicle, deactivate these systems in the following or similar situations:

▶ when towing

▶ in a car wash

! **NOTE** Damage due to unsuitable car wash

▶ Before driving into a car wash make sure that the car wash is suitable for the vehicle dimensions.

▶ Ensure there is sufficient ground clearance between the underbody and the guide rails of the car wash.

▶ Ensure that the clearance width of the car wash, in particular the width of the guide rails, is sufficient.

To avoid damage to your vehicle, observe the following before using an automatic car wash:

- Active Brake Assist is deactivated.
- Active Distance Assist DISTRONIC is deactivated.
- The HOLD function is switched off.
- The side windows and roof are completely closed.
- The outside mirrors are folded in and an additional antenna is removed, if present.
- The climate control blower is switched off.
- The windscreen wiper switch is in position 0.

If the vehicle is very dirty, wash off excess dirt before cleaning the vehicle in an automatic car wash.

After leaving the car wash, pay attention to the following:

- The outside mirrors are fully folded out again and an additional antenna is mounted again, if present.
- Remove wax residues on the windscreen and wiper rubbers to prevent smearing and reduce wiper noise.

Remove wax residues from the camera lens in vehicles with a reversing camera (→ page 219).

Notes on use of a high-pressure cleaner

⚠ **WARNING** Risk of an accident when using high-pressure cleaners with round-spray nozzles

The water jet can cause externally invisible damage.

Components damaged in this way may unexpectedly fail.

▶ Do not use a high-pressure cleaner with round-spray nozzles.

▶ Have damaged tyres or chassis parts replaced immediately.

! **NOTE** Damage to component parts due to improper high-pressure cleaning

Components can be damaged if the distance of the high-pressure nozzle is too small.

▶ Maintain a minimum distance of about 30 cm between the high-pressure nozzle and car parts.

▶ Do not use a high-pressure cleaner with a round-spray nozzle.

▶ Keep the water jet moving constantly while cleaning.

▶ Do not clean the following components with the high-pressure cleaner:
- electrical components
- plug connectors
- reversing camera
- drivetrain
- seals
- hoses

! **NOTE** Damage caused by the use of a high-pressure cleaner in the vehicle interior

The pressurised water created by the high-pressure cleaner and the associated spray could cause considerable damage to the vehicle.

▶ Never use a high-pressure cleaner in the vehicle interior.

Washing the engine

! **NOTE** Damage and malfunctions due to washing the engine

▶ To prevent damage and malfunctions of the drive system, observe the following points:
- when using high-pressure or steam cleaners, do not point the water jet directly at electrical components and the end of electric cables.
- make sure that no water enters the ventilation and airing openings.
- use preservative agents on the drive system after washing it.
- protect the belt drive from preservation agents.

Washing the vehicle by hand

Observe the legal requirements. For example, in a number of countries, washing by hand is permitted only in specially designated wash bays.

▶ Wash the vehicle with lukewarm water and a soft car sponge. When doing so, do not expose the vehicle to direct sunlight.

▶ Use a mild cleaning agent, e.g. a Mercedes-Benz approved car shampoo.

▶ Carefully spray the vehicle with water and dry off with a chamois. Do not point the water jet directly into the air inlet grille.

When operating the vehicle in winter, remove all traces of road salt deposits carefully and as soon as possible.

Notes on paintwork care

! **NOTE** Paintwork damage and corrosion due to inadequate care

Failure to promptly and thoroughly remove dirt from bird droppings or other residue could result in paintwork damage and corrosion at a later date.

▶ Clean dirt off paint and matt finish thoroughly and as soon as possible.

Observe the notes on cleaning and care to avoid paintwork damage.

Paint
- Insect remains: soak with insect remover and rinse the treated areas afterwards.
- Bird droppings: soak with water and rinse off afterwards.
- Tree resin, oils and greases: remove by rubbing gently with a cloth soaked in petroleum ether or lighter fluid.
- Coolant and brake fluid: remove with a moist cloth and clean water.
- Tar stains: use tar remover.
- Wax: use silicone remover.
- Do not attach stickers, films or similar materials.
- Remove dirt as soon as possible.

Matt finish
- Only use care products approved for Mercedes-Benz.
- Do not polish the vehicle and light alloy wheels.
- Only use car washes that correspond to the latest engineering standards.
- Do not use car wash programmes with a final hot wax treatment.
- Do not use paint cleaners, buffing or polishing products, gloss preservers, e.g. wax.
- Always have paintwork repairs carried out at a qualified specialist workshop.

Notes on the care of vehicle parts

WARNING Risk of injury if unsuitable climbing aids are used

In the event that you use openings in the bodywork or attachments as steps, you could:

- Slip and/or fall.
- Damage the vehicle and thus slip and fall.

▶ Always use non-slip, stable climbing aids, e.g. a suitable ladder.

WARNING Risk of entrapment if the windscreen wipers are switched on while the windscreen is being cleaned

If the windscreen wipers are set in motion while you are cleaning the windscreen or wiper blades, you can be trapped by the wiper arm.

▶ Always switch off the windscreen wipers and the ignition before cleaning the windscreen or wiper blades.

NOTE Damage caused by the use of openings in the bodywork or detachable part as a step

Using the lower guide of the sliding door (carriage) as a step can damage the trim and/or mechanism of the sliding door.

▶ Do not use the guide of the sliding door (carriage) as a step.

ⓘ Information on suitable cleaning agents or cleaning cloths can be obtained from a qualified specialist workshop.

To prevent damage to the vehicle, observe the notes on cleaning and care of the following vehicle parts:

Wheels and rims

- Use water and acid-free alloy wheel cleaner.
- Do not use acidic alloy wheel cleaners to remove brake dust. Otherwise, wheel bolts and brake components could be damaged.
- To avoid corrosion of brake disks and brakepads, drive for a few minutes after cleaning before parking the vehicle. The brake disks and brakepads will warm up and dry out.

Windows

- Clean the windows inside and outside with a damp cloth and with a cleaning agent recommended for Mercedes-Benz.
- Do not use dry cloths, abrasive cleaning agents or cleaners containing solvents to clean the insides of windows.

Wiper blades

- With the wiper arms folded away, clean the wiper blades with a damp cloth (⟶ page 113).
- Do not clean the wiper blades too often.

Exterior lighting

- Clean the lenses with a wet sponge and mild cleaning agent, such as car shampoo.
- Use only cleaning agents or cloths suitable for plastic lenses.

Vehicle socket (high-voltage battery)

- Clean the vehicle socket with a soft cloth and clean water.
- Do not use a high-pressure cleaner or cleaning agents (e.g. soap).

Sensors

- Clean the sensors in the front and rear bumpers with a soft cloth and car shampoo (⟶ page 147).
- When using a high-pressure cleaner, keep a minimum distance of 30 cm.

Reversing camera and 360° camera

- Open the camera cover with the multimedia system (⟶ page 159).
- Use clean water and a soft cloth to clean the camera lens.
- Do not use a high-pressure cleaner.

Sliding door

- Remove foreign objects from the vicinity of the contact plates and contact pins of the sliding door.
- Clean the contact plates and contact pins with a mild cleaning agent and a soft cloth.
- Do not oil or grease the contact plates or the contact pins.

Notes on the cleaning and care of the interior

WARNING Risk of injury from plastic parts breaking off after the use of solvent-based care products

Care and cleaning products containing solvents can cause surfaces in the cockpit to become porous. When the airbags are deployed, plastic parts may break away.

▶ Do not use any care or cleaning products containing solvents to clean the cockpit.

WARNING Risk of injury or fatal injuries from bleached seat belts

Bleaching or dyeing seat belts can severely weaken them.

This can, for example, cause seat belts to tear or fail in an accident.

▶ Never bleach or dye seat belts.

NOTE Property damage due to disinfectants

The interior includes a number of sensitive surfaces such as displays, plastics and leather.

Disinfectants can contain alcohol and other substances that penetrate and damage surfaces. Technology behind buttons and displays can also be damaged.

▶ Do not use disinfectant on interior surfaces.

To prevent damage to the vehicle, observe the following notes for cleaning and care:

Seat belts

- Clean with lukewarm soapy water.
- Do not use chemical cleaning agents.
- Do not dry the seat belt by heating above 80°C or in direct sunlight.

Instrument cluster lenses

- Clean the surfaces carefully with a microfibre cloth and acrylic glass care product.
- Do not use any other agents.

Display

- Switch off the display and let it cool down.
- Clean the surface carefully with a microfibre cloth and a suitable display cleaning product (TFT-LCD).
- Do not use any other agents.

Digital inside rearview mirror

- Clean the mirror surface with a cloth moistened with glass cleaner.
- Clean the light sensors of the inside rearview mirror with a dry cotton cloth.
- Do not spray the glass cleaner on the mirror surface.
- Do not use any other agents.

Plastic trim

- Clean with a damp microfibre cloth.
- For heavy soiling: use a cleaning agent recommended for Mercedes-Benz.
- Do not affix stickers, films or similar.
- Do not allow to come into contact with cosmetics, insect repellent or sun creams.

Roof lining

- Clean with a brush or dry shampoo.

Carpet

- Use a carpet and textile cleaning agent recommended for Mercedes-Benz.

Genuine leather seat covers

- Clean with a damp cloth and then wipe with a dry cloth.
- Leather care: use a leather care agent recommended for Mercedes-Benz.
- Do not allow the leather to become too damp.
- Do not use a microfibre cloth.

Imitation leather seat covers

- Clean with a damp cloth and a 1% soapy water solution.
- Do not use a microfibre cloth.

Cloth seat covers

- Clean with a damp microfibre cloth and 1% soapy water solution and allow to dry.

Steering wheel from genuine leather

NOTE Damage caused by wrong cleaners

▶ Do not use solvent-based cleaning agents such as tar remover or wheel cleaner; neither should you use polishes or waxes. Otherwise you may damage the finish.

- Clean with a damp cloth and a 1% soapy water solution and then wipe with a dry cloth.
- For heavy soiling: use a cleaning agent recommended for Mercedes-Benz.

- Leather care: use a leather care agent recommended for Mercedes-Benz.
- Do not allow the leather to become too damp.
- Do not use a microfibre cloth.

ⓘ Leather is a natural product. It has natural surface properties, such as differences in structure, marks caused by growth and injury or subtle colour differences.

Real wood and trim elements

- Clean with a microfibre cloth.
- Black piano-lacquer look: clean with a damp cloth and soapy water.
- For heavy soiling: use a cleaning agent recommended for Mercedes-Benz.
- Do not use any cleaning agents, polishes or waxes containing solvents.

Emergency

Removing the safety vest

The safety vest is located in the door stowage compartment in the driver's door.

▶ Take the safety vest out of the door stowage compartment.

ⓘ Safety vests can also be stored in the door stowage compartment of the co-driver's door.

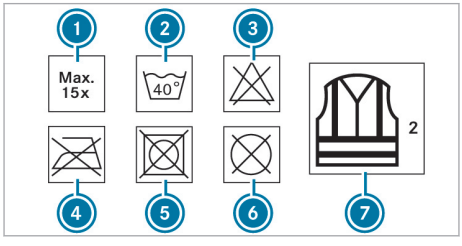

1. Maximum number of washes
2. Maximum wash temperature
3. Do not bleach
4. Do not iron
5. Do not tumble dry
6. Do not dry-clean
7. This is a class 2 vest

The safety vest only fulfils the legally required standards if it is the correct size and is completely closed.

Replace the safety vest in the following cases:

- if damaged or if the reflex strips are dirty
- if the maximum permitted number of washes is exceeded
- if the safety vest's fluorescence has faded

Warning triangle

Removing the warning triangle

The warning triangle is located in the stowage compartment in the driver's door.

▶ Take the warning triangle out of the stowage compartment.

Setting up the warning triangle

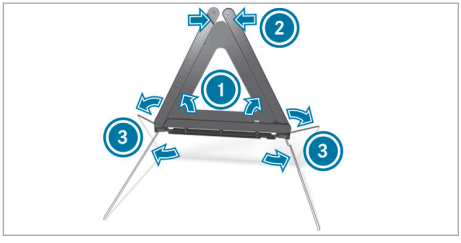

▶ Fold side reflectors ① upwards to form a triangle and lock them at the top using upper press-stud ②.

▶ Fold stand ③ down and out to the side.

ⓘ When using the warning triangle you must observe the legal requirements for the country in which you are currently driving.

Removing the first-aid kit (soft sided)

The first-aid kit (soft sided) is located in the storage compartment in the front passenger door.

▶ Remove the first-aid kit from the stowage compartment.

Check the expiry date on the first-aid kit (soft sided) at least once a year. Replace any expired or missing contents.

Observe the legal requirements of the country in which you are currently driving.

Removing the fire extinguisher

⚠ **WARNING** Risk of accident due to an incorrectly secured fire extinguisher in the driver's footwell

A fire extinguisher may impede pedal travel or block a depressed pedal.

This jeopardises the operating and road safety of the vehicle.

The fire extinguisher can be flung around and injure the driver or other vehicle occupants.

▶ Always store and secure the fire extinguisher in the bracket.

▶ Do not remove the fire extinguisher while driving.

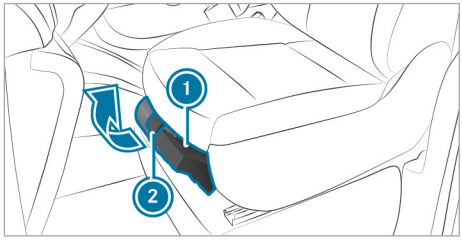

- Open the clasp on the holder (2).
- Remove the fire extinguisher (1) from its holder.

For vehicles with a swivelling front seat, the holder containing the fire extinguisher is located at the side of the seat box.

Please read the instructions on the fire extinguisher carefully and familiarise yourself with its operation. Have the fire extinguisher refilled after each use and checked every one or two years. The fire extinguisher may otherwise fail in an emergency.

Observe the legal requirements of the country in which you are currently driving.

Mercedes-Benz emergency call system

Information on the Mercedes-Benz emergency call system

The Mercedes-Benz emergency call system only functions in areas where mobile phone coverage is available from the relevant contract partner. Insufficient network coverage from the relevant contract partner may result in an emergency call not being transmitted.

The vehicle must be switched on before an automatic emergency call can be made.

ⓘ The Mercedes-Benz emergency call system is activated at the factory. Using the Mercedes-Benz emergency call system is free of charge.

Overview of the Mercedes-Benz emergency call system

The Mercedes-Benz emergency call system can help to decisively reduce the time between an accident and the arrival of emergency services at the site of the accident. It helps locate an accident site in places that are difficult to access.

The emergency call can be triggered automatically (→ page 223).

You also have the option of triggering the emergency call manually (→ page 224). Only make emergency calls if you or others are in need of rescue. Do not make an emergency call in the event of a breakdown or a similar situation.

Message in the media display:
SOS NOT READY: the vehicle is not switched on or the emergency call system is malfunctioning.

This does not necessarily indicate a total failure of the emergency call system. Emergency calls can still be transmitted.

The display refers only to the vehicle and does not take account of the availability of mobile phone networks and the Mercedes-Benz emergency call centre.

The functional readiness of the emergency call system on the vehicle can be seen when the SOS NOT READY display disappears once the vehicle is switched on.

During an active emergency call, SOS appears in the display.

You can find more information on the regional availability of the Mercedes-Benz emergency call system at: https://www.mercedes-benz-mobile.com/extra/ecall/

ⓘ If there is a malfunction of the emergency call system, the loudspeakers, microphone, airbag or the SOS button, for example, are faulty.

You can recognise a fault in the emergency call system by the following displays:

- The red SOS NOT READY message appears in the display of the instrument cluster or in the media display.
- The SOS button lights up red continuously.

Triggering an automatic Mercedes-Benz emergency call

Requirements
- The vehicle is switched on.
- The 12 V on-board electrical system battery is sufficiently charged.

The Mercedes-Benz emergency call system automatically initiates an emergency call after restraint systems such as an airbag or seat belt tensioner is triggered in an accident.

When the emergency call is made:

- A voice connection is made to the Mercedes-Benz emergency call centre.
- A message with accident data is transmitted to the Mercedes-Benz emergency call centre.

  The Mercedes-Benz emergency call centre can transmit the vehicle position data to one of the public emergency services call centres.
- Under certain circumstances data is also transmitted in the voice channel to the Mercedes-Benz emergency call centre.

  This allows measures for rescue, recovery or towing to a Mercedes-Benz Service Centre to be initiated quickly.

The SOS button in the overhead control panel flashes until the emergency call is finished.

It is not possible to immediately end an automatic emergency call.

If the Mercedes-Benz emergency call system cannot connect to the Mercedes-Benz emergency call centre, the emergency call is automatically sent to the public emergency services call centre.

If no connection can be made to the public emergency services, a corresponding message appears in the display.

▶ Dial the emergency number **112** on your mobile phone.

If an emergency call has been initiated:

- Remain in the vehicle if the road and traffic conditions permit you to do so until a voice connection is established with the emergency call centre operator.
- Based on the call, the operator decides whether it is necessary to call rescue teams and/or the police to the accident site.
- If no vehicle occupant answers, an ambulance is sent to the vehicle immediately.

Triggering a manual Mercedes-Benz emergency call

▶ **To use the SOS button in the overhead control panel:** press the SOS button at least one second long (→ page 179).

▶ **To use voice control:** use the LINGUATRONIC "Call the Mercedes accident centre" voice command.

When the emergency call is made:

- A voice connection is made to the Mercedes-Benz emergency call centre.
- A message with accident data is transmitted to the Mercedes-Benz emergency call centre.

  The Mercedes-Benz emergency call centre can transmit the vehicle position data to one of the public emergency services call centres.
- Remain in the vehicle if the road and traffic conditions permit you to do so until a voice connection is established with the emergency call centre operator.
- Based on the call, the operator decides whether it is necessary to call rescue teams and/or the police to the accident site.
- Under certain circumstances data is also transmitted in the voice channel to the Mercedes-Benz emergency call centre.

  This allows measures for rescue, recovery or towing to a Mercedes-Benz service centre to be initiated quickly.

If the Mercedes-Benz emergency call system cannot connect to the Mercedes-Benz emergency call centre, the emergency call is automatically sent to the public emergency services call centre.

If no connection can be made to the public emergency services, a corresponding message appears in the media display.

▶ Dial the emergency number **112** on your mobile phone.

Ending an unintentional Mercedes-Benz emergency call

▶ Select ☎ on the multifunction steering wheel.

Transmitted data Mercedes-Benz with the Mercedes-Benz emergency call

In the event of an automatic or manual emergency call, as well as for a **112** emergency call, data is transmitted to the Mercedes-Benz emergency call centre or the public emergency services call centre.

The following data is transmitted:

- Vehicle's GPS position data
- GPS position data on the route (a few 100 m before the incident)
- Direction of travel
- Vehicle identification number

- Vehicle drive type
- The estimated number of people in the vehicle
- Whether the emergency call was initiated manually or automatically
- Time of the accident
- Language setting on the multimedia system

For accident clarification purposes, the following measures can be taken up to an hour after the emergency call has been initiated:

- The current vehicle position can be called up.
- A voice connection to the vehicle occupants can be established.

ⓘ **For Eurasian Economic Union:** various functions, e.g. receiving traffic information, cannot be used for up to two hours after sending an emergency call.

Flat tyre

Notes on flat tyres

⚠ **WARNING** Risk of accident due to a flat tyre

A flat tyre strongly impairs the vehicle's driving characteristics, as well as its steering and braking characteristics.

▶ Do not drive with a flat tyre.

▶ Replace the flat tyre with the spare wheel. Alternatively, consult a qualified specialist workshop.

You will find a sticker with the Mercedes-Benz Service24h telephone number e.g. on the B-pillar on the driver's side, for example.

For vehicles with a spare wheel, information in the event of a flat tyre can be found under "Wheels and tyres" (→ page 237).

Battery

Notes on the 12 V on-board electrical system battery

⚠ **WARNING** Risk of a fire due to work carried out incorrectly on the battery

The battery clamps may be live even after they have been disconnected. This can result in a short circuit.

▶ Always have work on the batteries carried out at a qualified specialist workshop.

▶ Never disconnect the battery yourself.

⚠ **WARNING** Risk of an accident due to work carried out incorrectly on the battery

Work carried out incorrectly on the battery can, for example, lead to a short circuit. This can restrict functions relevant for safety systems and impair the operating safety of your vehicle.

You could lose control of the vehicle in the following situations in particular:

- when braking
- in the event of abrupt steering manoeuvres and/or when the vehicle's speed is not adapted to the road conditions

▶ In the event of a short circuit or a similar incident, contact a qualified specialist workshop immediately.

▶ Do not drive on.

▶ Always have work on the battery carried out at a qualified specialist workshop.

- Further information on ABS (→ page 148)
- Further information on ESP®(→ page 148)

For safety reasons, Mercedes-Benz recommends that you only use batteries that have been tested and approved for your vehicle by Mercedes-Benz. These batteries provide increased impact protection to prevent vehicle occupants from suffering acid burns should the battery be damaged in an accident.

⚠ **WARNING** Risk of explosion due to electrostatic charge

Electrostatic charge can ignite the highly explosive gas mixture in the battery.

▶ To discharge any electrostatic charge that may have built up, touch the metal vehicle body before handling the battery.

The highly flammable gas mixture is created while the battery is charging and when jump-starting.

⚠ **WARNING** Danger of chemical burns from the battery acid

Battery acid is caustic.

- Avoid contact with the skin, eyes or clothing.
- Do not lean over the battery.
- Do not inhale battery gases.
- Keep children away from the battery.
- Immediately rinse battery acid off thoroughly with plenty of clean water and seek medical attention immediately.

ENVIRONMENTAL NOTE Environmental damage due to improper disposal of batteries

Batteries contain pollutants. It is illegal to dispose of them with the household rubbish.

- Dispose of batteries in an environmentally responsible manner. Take discharged batteries to a qualified specialist workshop or to a collection point for used batteries.

Observe the safety notes and protective measures when handling batteries.

Risk of explosion

Fire, naked flames and smoking are prohibited when handling the battery. Avoid creating sparks.

Electrolyte or battery acid is corrosive. Avoid contact with the skin, eyes and clothing. Wear suitable protective clothing, in particular gloves, an apron and a safety mask. Immediately rinse electrolyte acid splashes off with clean water. If necessary, seek medical advice.

Wear eye protection.

Keep children at a safe distance.

Observe these Operating Instructions.

Consult a qualified specialist workshop if you wish to leave your vehicle parked up for long periods.

When you park the vehicle, remove the key if you do not require any electrical consumers. The vehicle will then use very little energy, thus conserving battery power.

Installation locations

Your vehicle may be equipped with the following two batteries located in the seat base of the right-hand front seat, depending on the equipment version:

- 12 V on-board electrical system battery
- 12 V emergency P battery

Notes on the high-voltage battery

DANGER Risk of fire and explosion from excessive internal pressure of the high-voltage battery

In the event of a vehicle fire, flammable gas can escape and ignite.

- Stop the charging process immediately in case of unusual odours, smoke or burn marks.
- Leave the danger zone immediately. Secure the danger zone at a sufficient distance.
- Call the fire service.

NOTE Damage to the high-voltage battery due to temperatures that are too low or too high

If, during storage or transport (for example, in a container), the vehicle is exposed to temperatures below -25 °C or above 40 °C for longer than seven days, the high-voltage battery can be irreparably damaged.

- Avoid exposing the high-voltage battery to damaging temperatures for lengthy periods of time.

In order for the high-voltage battery to achieve the maximum possible service life, it should always be sufficiently charged. Have the battery's charge level checked if you park the vehicle for a long

period of time. Exhaustive discharging caused by the vehicle standing idle for lengthy periods can damage the high-voltage battery. If the vehicle is idle for lengthy periods, run it for a few minutes once every four weeks to charge up the high-voltage battery.

Risk of explosion

Fire, naked flames and smoking are prohibited when handling the battery. Avoid creating sparks.

Electrolyte or battery acid is corrosive. Avoid contact with the skin, eyes or clothing. Wear suitable protective clothing, in particular gloves, an apron and a face mask. Immediately rinse electrolyte or acid splashes off with clean water. Consult a doctor if necessary.

Wear safety glasses.

Keep out of the reach of children.

Observe these Operating Instructions.

Further information on charging the high-voltage battery (⟶ page 136).

Notes on manually switching off the high-voltage on-board electrical system (⟶ page 127).

Starting assistance and charging the 12 V on-board electrical system battery

- ▶ Only have starting assistance provided by a qualified specialist workshop, e.g. a Mercedes-Benz Service Centre.
- ▶ Only have the battery charged at a qualified specialist workshop, e.g. a Mercedes-Benz Service Centre.

Replacing the 12 V on-board electrical system battery

- ▶ Only have the battery replaced at a qualified specialist workshop, e.g. at a Mercedes-Benz Service Centre.

Towing or tow-starting

Permissible towing methods

Mercedes-Benz recommends transporting your vehicle in the case of a breakdown, rather than towing it.

For towing with both axles on the ground, use a tow rope or tow bar.

If you notice that the vehicle has lost coolant, the vehicle must be towed with raised front axle, or transported.

⚠ **WARNING** Risk of accident due to limited safety-related functions during the towing process

Safety-related functions are limited or no longer available in the following situations:

- the vehicle is switched off.
- the brake system or power steering system is malfunctioning.
- the energy supply or the on-board electrical system is malfunctioning.

When your vehicle is towed away, significantly more effort may be required to steer and brake than is normally required.

- ▶ Use a tow bar.
- ▶ Make sure that the steering wheel can move freely before towing the vehicle away.

⚠ **WARNING** Risk of accident when towing a vehicle which is too heavy

If the vehicle to be tow-started or towed away is heavier than the permissible gross mass of your vehicle, the following situations can occur:

- the towing eye may become detached.
- the vehicle/trailer combination may swerve or overturn.

- ▶ Before tow-starting or towing away, check if the vehicle to be tow-started or

towed away exceeds the permissible gross mass.

Details on the gross vehicle weight rating of your vehicle can be found on the vehicle identification plate (→ page 248).

! **NOTE** Damage due to incorrect connection of the tow bar or improper use of the towing device

- ▶ Only connect the tow rope or tow bar to the towing eyes.
- ▶ Do not use the towing eyes to recover a vehicle.

! **NOTE** Damage due to pulling force being too high

Pulling away abruptly can damage the vehicles if the tractive forces are too high.

- ▶ Pull away as straight, slowly and smoothly as possible.

! **NOTE** Damage due to improper towing with a tow rope

If you ignore safety and protective measures when towing with a tow rope, this can result in damage to the vehicle.

Observe the following points:

- ▶ Secure the tow rope on the same side on both vehicles.
- ▶ Secure the tow rope to the towing eyes.
- ▶ Do not exceed the legally prescribed length of the tow rope.
- ▶ Mark the tow rope in the middle, e.g. with a white cloth (30 x 30 cm). This will make other road users aware that a vehicle is being towed.
- ▶ During the journey, observe the brake lamps of the towing vehicle and maintain the distance so that the tow rope does not sag.
- ▶ Do not use steel cables or chains to tow your vehicle.

! **NOTE** Damage due to towing the vehicle at too high a speed or too far

Towing the vehicle at too high a speed or too far can damage the drivetrain.

- ▶ Do not exceed a towing speed of 50 km/h.
- ▶ Do not exceed a towing distance of 50 km.

! **NOTE** Damage to the drivetrain due to insufficient cooling

If the cooling system is damaged, towing the vehicle can damage the drivetrain.

- ▶ Have the vehicle towed with the front axle raised or have it transported.

! **NOTE** Damage to the drivetrain due to unauthorised towing of the vehicle

Towing the vehicle backwards is not permitted as this can damage the drivetrain.

- ▶ Only tow the vehicle forwards.

! **NOTE** Damage to the vehicle due to automatic braking

When the following functions are activated, the vehicle brakes automatically in certain situations:

- Active Brake Assist
- Active Distance Assist DISTRONIC
- HOLD function

To avoid damage to the vehicle, deactivate these systems in the following or similar situations:

- ▶ when towing
- ▶ in a car wash

! **NOTE** Damage to the transmission when towing due to shifting into transmission position P

If you open the driver's or co-driver door when towing, the transmission can shift into position P and become damaged.

- ▶ Shift the automatic transmission to position N.
- ▶ Do not open any doors during the towing process.

Permissible towing methods

Both axles on the ground	Front axle raised
Yes, for a maximum of 50 km at 50 km/h	Yes, for a maximum of 50 km at 50 km/h

ⓘ If the transmission cannot be shifted to position N, have the vehicle transported (→ page 230). A towing vehicle with lifting equipment is required for transporting the vehicle.

Towing the vehicle with both axles on the ground

! **NOTE** Damage to the vehicle due to improper towing

▶ Observe the notes and instructions on permissible towing methods.

▶ Make sure that the battery is connected and charged.

Please note the following points if the battery is discharged:

- The vehicle cannot be started.
- It is not possible to release or apply the parking brake.
- The transmission cannot be shifted to position N or P.

ⓘ In the following cases, only transport of the vehicle is permissible:

- If the vehicle cannot be started.
- If the transmission cannot be shifted to position N.
- If the display in the instrument cluster is not working.
- If the Towing not permitted See Owner's Manual message appears in the instrument cluster display.

Transporting the vehicle (→ page 230).
A towing vehicle with lifting equipment is required for transporting the vehicle.

▶ Observe the notes and instructions on permissible towing methods (→ page 227).

▶ Fit the towing eye (→ page 230).

▶ Secure the towing device.

▶ Switch on the vehicle.

▶ Deactivate automatic locking (→ page 54).

▶ Do not activate the HOLD function.

▶ Deactivate Active Brake Assist (→ page 151).

▶ Deactivate Active Distance Assist DISTRONIC (→ page 154).

▶ Shift the transmission to position N (→ page 134).

▶ Release the parking brake (→ page 146).

Recover a stuck vehicle

! **NOTE** Damage due to pulling force being too high

Pulling away abruptly can damage the vehicles if the tractive forces are too high.

▶ Pull away as straight, slowly and smoothly as possible.

If the drive wheels get stuck in loose or muddy ground, recover the vehicle with the utmost care, especially if the vehicle is laden.

▶ Observe the notes on permissible towing methods (→ page 227).

▶ If possible, pull the vehicle back out in the tracks it made before it became stuck.

Towing a vehicle with raised front axle

⚠ **WARNING** Risk of accident due to towing when the vehicle is switched on

When the vehicle is being towed away and is switched on with the front axle raised, ASR can brake the rear axle wheels in an erratic manner.

The vehicle can lose directional stability.

▶ Switch off the vehicle before towing it with the front axle raised.

NOTE Damage to the vehicle due to improper towing

▶ Observe the notes and instructions on permissible towing methods.

- Observe the notes and instructions on permissible towing methods (→ page 227).
- Activate hazard warning lights (→ page 103).
- De-activate tow-away protection (→ page 67).
- Straighten the front wheels.
- Release the parking brake (→ page 146).
- Turn the key in the ignition to position 0 and remove from the ignition.
- Take the key with you when you leave the vehicle.
- Do not exceed a towing speed of 50 km/h.

Loading the vehicle for transport

NOTE Damage due to incorrect attachment

The vehicle may be damaged when lashing to chassis components.

▶ Only lash the vehicle at the wheels.

- Observe the notes on permissible towing methods (→ page 227).
- To load the vehicle onto a trailer or transporter, use the towing eye.

Before loading the vehicle

- Switch on the vehicle.
- Shift the transmission to position N.
- Release the parking brake (→ page 146).
- Load up the vehicle.

NOTE Damage to the drive train due to incorrect positioning of the vehicle

▶ Do not position the vehicle above the connection point of the transport vehicle.

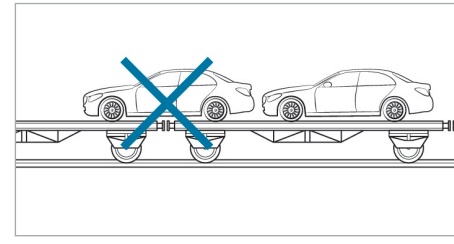

- Make sure that the front and rear axles come to rest on the same transportation vehicle.

After loading the vehicle

- Shift the transmission to position P.
- Deactivate tow-away protection (→ page 67).
- Turn the key to position 0 in the ignition lock and remove it from the ignition lock.
- Use the parking brake to secure the vehicle against rolling away.
- Secure the vehicle by the wheels.

Towing eye storage location

The towing eye is located in the vehicle tool kit (→ page 231).

Fitting/removing the towing eye

Fitting and removing the front towing eye

NOTE Damage to the vehicle due to incorrect use of the towing eye

When a towing eye is used to recover a vehicle, the vehicle may be damaged in the process.

▶ Only use the towing eye to tow away or tow start the vehicle.

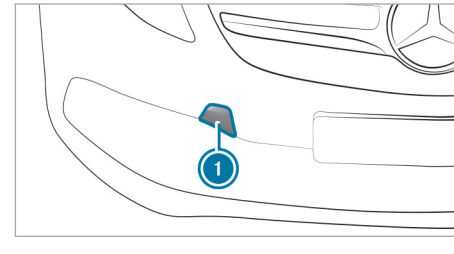

Fixture for the front towing eye in the bumper (example)

- Take the towing eye and screwdriver from the vehicle tool kit (→ page 231).

Fitting

- Press on the top of the cover ① and remove the cover ① from the opening.
  You will see the fixture for the towing eye.
- Screw in the towing eye clockwise to the stop.
- Insert the screwdriver into the towing eye and tighten the towing eye.
- Stow the screwdriver in the vehicle tool kit.

Removing

- Remove the screwdriver from the vehicle tool kit.
- Insert the screwdriver into the towing eye and turn the towing eye anti-clockwise.
- Unscrew and remove the towing eye.
- Insert cover ① with the lug at the top and press it in at the bottom until it engages.
- Stow the towing eye and the screwdriver with the vehicle tool kit.

Rear towing eye

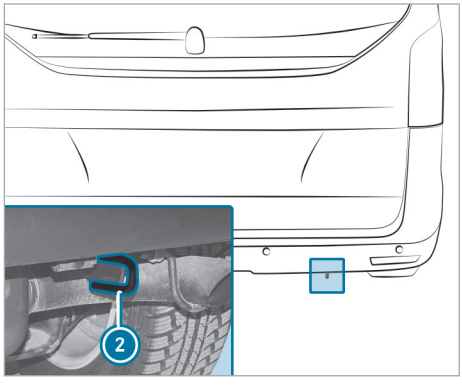

Rear towing eye under the bumper

- When towing a vehicle, attach ② the towing device to the rear towing eye.
- Observe the notes on the permitted towing methods (→ page 227).

Tow-starting the vehicle (vehicle emergency start)

- If the vehicle does not start, have the vehicle transported to the nearest qualified specialist workshop, e.g. a Mercedes-Benz Service Centre.
- The vehicle cannot be started by tow-starting. Do not attempt to tow-start the vehicle.

Electrical fuses

Notes on electrical fuses

WARNING Risk of accident and injury due to overloaded lines

If you manipulate or bridge a faulty fuse or if you replace it with a fuse with a higher amperage, the electric line could be overloaded.

This could result in a fire.

- Always replace faulty fuses with specified new fuses containing the correct amperage.

If the new fuse which has been inserted also blows, have the cause traced and rectified at a qualified specialist workshop.

The fuse allocation chart and the information on the fuses can be found in the "Fuse allocation chart" Supplement.

Vehicle tool kit

Information on the vehicle tool kit

The vehicle tool kit is in the rear stowage compartment.

Apart from some country-specific variants, vehicles without a spare wheel are not equipped with a tyre-changing tool.

If your vehicle is equipped with a tyre-change tool kit, you can find it in the vehicle tool kit in the rear stowage compartment.

Some tools for changing a wheel are specific to the vehicle. For more information on which tyre-change tool kits are required and approved for performing a wheel change on your vehicle, consult a qualified specialist workshop.

Required tyre-change tool kits may include the following, for example:

- Jack
- Wheel spanner
- Ratchet ring spanner

ⓘ The jack has a maximum weight of 7.5 kg depending on the vehicle's equipment.
You will find the maximum load capacity of the jack stated on the adhesive label attached to the jack.
The jack is maintenance-free. If there is a malfunction, please contact a qualified specialist workshop.

Stowage compartment in the rear

Opening the stowage compartment

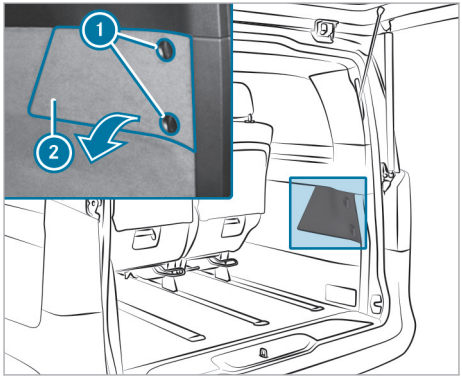

Stowage compartment in the rear on the right-hand side of the vehicle

- ▶ If necessary, fold up the rear seat.
- ▶ Turn top rotary catch ① clockwise and bottom rotary catch ① anti-clockwise.
- ▶ Remove cover ②.

Removing the vehicle tool kit and jack from the tool holder

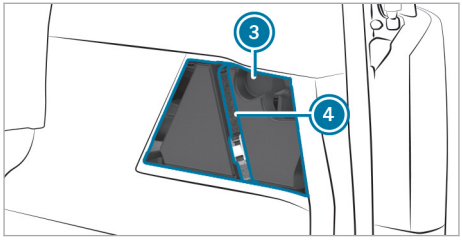

Stowage compartment with tool holder

- ▶ Remove clamping strap ④.
- ▶ Lift off tool holder cover ③.
- ▶ Carefully pull the vehicle tool kit and jack upwards out of the stowage compartment. Lift the jack slightly before removing it and turn it to a diagonal position in the stowage compartment.

Stowing the vehicle tool kit and the jack

- ▶ Before stowing, wind the jack to the fully closed position and place it so that the handwheel is facing forwards and the plate is facing inwards.
- ▶ Place the jack and vehicle tool kit into the tool holder.
- ▶ Replace cover ③ of the tool holder.
- ▶ Tighten clamping strap ④.

Closing the stowage compartment

- ▶ Put on cover ②.
- ▶ Turn top rotary catch ① anti-clockwise and bottom rotary catch ① clockwise.
- ▶ Fold down the rear seat.

Information on noise or unusual driving characteristics

While driving, pay attention to vibrations, noises and unusual driving characteristics, e.g. pulling to one side. This may indicate damage to the wheels or tyres. If you suspect that a tyre is defective, reduce your speed. Stop the vehicle as soon as possible to check if wheels and tyres have been damaged or are no longer functioning properly. Hidden tyre damage could also be causing the unusual driving characteristics. If no signs of damage can be detected, have the tyres and wheels checked at a qualified specialist workshop.

Notes on regularly inspecting wheels and tyres

⚠ **WARNING** Risk of injury due to damaged tyres

Damaged tyres can cause tyre pressure loss.

▶ Check the tyres regularly for signs of damage and replace any damaged tyres immediately.

Check the wheels and tyres of your vehicle for damage regularly, i.e. at least every two weeks, as well as after driving off-road or on rough roads. Damaged wheels can lead to a loss of tyre pressure.

Look out for the following types of damage, for example:

- cuts in the tyres
- punctures in the tyres
- tears in the tyres
- bulges on tyres
- deformation or severe corrosion on wheels

⚠ **WARNING** Risk of aquaplaning due to insufficient tyre tread

Insufficient tyre tread will result in reduced tyre grip.

The risk of aquaplaning is increased on wet roads, especially when the speed of the vehicle is not adapted to suit the conditions.

▶ Thus, you should regularly check the tread depth and the condition of the tread across the entire width of all tyres.

Minimum tread depth for:

- Summer tyres: 3 mm
- M+S tyres: 4 mm

▶ For safety reasons, replace the tyres before the legally-prescribed limit for the minimum tread depth is reached.

Conduct the following checks regularly on all wheels, at least once a month or as required, e.g. before a long journey or when driving off-road:

- check the tyre pressure (→ page 234)
- check the valve caps

  Valves must be protected from moisture and dirt with valve caps specifically approved by Mercedes-Benz for your vehicle.
- visually inspect the tread depth and the tyre tread across the whole tyre width

  The minimum tread depth for summer tyres is 3 mm and on winter tyres 4 mm.

Information on driving with summer tyres

At temperatures below 10 °C summer tyres lose elasticity and therefore traction and braking power. Change the tyres on your vehicle to M+S tyres. Using summer tyres at very cold temperatures could cause tears to form, thereby damaging the tyres permanently. Mercedes-Benz cannot accept responsibility for this type of damage.

Once you have fitted the summer tyres:

- Check the tyre pressures (→ page 234)
- Restart the tyre pressure monitor (→ page 237)

Information on M+S tyres

At temperatures below 10°C use winter tyres or all-season tyres that are marked with M+S.

Only winter tyres bearing the snowflake symbol in addition to the M+S marking provide the best possible grip in wintry road conditions.

Only these tyres allow driving safety systems such as ABS and ESP® to also function optimally in winter. These tyres have been developed specifically for driving in snow.

Use M+S tyres of the same make and tread on all wheels to maintain safe handling characteristics.

Observe the maximum permissible speed specified for the M+S tyres you have fitted.

If you fit M+S tyres that have a lower maximum permissible speed than the maximum design speed of the vehicle, affix an appropriate warning sign in the driver's field of vision. You can obtain this at a qualified specialist workshop.

Once you have fitted the M+S winter tyres, take the following measures:

- check the tyre pressure (→ page 234)
- restart the tyre pressure monitoring system (→ page 237)

Notes on snow chains

WARNING Risk of accident due to incorrectly fitted snow chains

If you have fitted snow chains to the rear wheels, they may drag against the vehicle body or chassis components.

▶ Never fit snow chains on the rear wheels.

▶ Only fit snow chains on the front wheels in pairs.

WARNING Risk of accident due to snow chains breaking

If you drive too fast with snow chains, they can break, injure other persons, and damage the vehicle.

▶ Observe the maximum permissible speed for operation with snow chains.

Observe the following notes when using snow chains:

- Snow chains are only permissible for certain wheel/tyre combinations. You can obtain information on this at a qualified specialist workshop.
- For safety reasons, only use snow chains approved by Mercedes-Benz.
- Use snow chains only when the road surface is completely snow-covered. Remove the snow chains as soon as possible when you come to a road that is not snow-covered.
- Local regulations may restrict the use of snow chains. Observe the applicable regulations before fitting snow chains.
- If snow chains are fitted, the maximum permissible speed is 50 km/h.

ⓘ You can deactivate ESP® to pull away (→ page 149). This allows the wheels to spin, achieving an increased propulsive force.

Tyre pressure

Notes on tyre pressure

Driving with tyre pressure that is too high or too low can:

- Shorten the service life of the tyres
- Cause increased tyre damage
- Adversely affect handling characteristics and thus driving safety, for example, due to aquaplaning

WARNING Risk of accident due to repeated pressure drop in the tyres

The wheels, valves or tyres could be damaged.

Too low a tyre pressure can lead to the tyres bursting.

▶ Examine the tyres for foreign objects.

▶ Check whether the tyre has a puncture or the valve has a leak.

▶ If you are unable to rectify the damage, contact a qualified specialist workshop.

Information on the recommended tyre pressure for the vehicle's factory-fitted tyres can be found inside the flap on the left B-pillar or in the tyre pressure tables (→ page 235).

Use a suitable pressure gauge to check the tyre pressure. The outer appearance of a tyre does not permit any reliable conclusion about the tyre pressure.

ⓘ The difference in pressure of the tyres of an axle may not be higher than 10 kPa (0.1 bar/1.5 psi).

Vehicles with a tyre pressure monitoring system: you can also check the tyre pressure using the on-board computer.

Only correct tyre pressures when the tyres are cold. The tyres are cold if the following conditions have been met:

- The vehicle has been parked with the tyres out of direct sunlight for at least three hours.
- The vehicle has travelled less than 1.6 km.

Overview of the tyre pressure table

The tyre pressure table is located in the fuel filler flap.

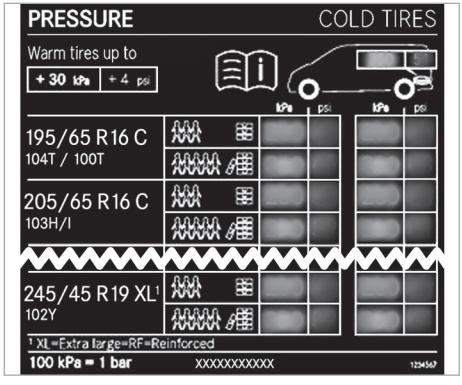

The tyre pressure table shows the recommended tyre pressure for all tyres approved at the factory for this vehicle. The recommended tyre pressures apply for cold tyres under various operating conditions, i.e. loading and/or speed of the vehicle.

If one or more tyre sizes precede a tyre pressure, the following tyre pressure information is only valid for those tyre sizes and their respective load condition.

If the preceding tyre sizes are supplemented by the [i] symbol, the tyre pressure information following shows alternative tyre pressures. Fuel consumption may then increase slightly.

The load conditions "partially laden" and "fully laden" are defined in the table for different numbers of passengers and amounts of luggage. The actual number of seats may differ.

The tyre pressure values given for partly laden vehicles are minimum values which offer you good ride comfort. They are not for trailer operation.

You can also use the tyre pressure values for a fully laden vehicle. These are always allowed and permissible. However, in a partially laden vehicle, the ride is not as comfortable and energy consumption is only minimally reduced. In addition, wear is greater in the middle of the tyre tread.

Set the correct tyre pressure before loading the vehicle. Once the vehicle is laden, check the tyre pressures and correct them if necessary.

Vehicles with a gross vehicle weight of 3,500 kg

The following tyre pressure values apply to the following vehicles:

- with a permissible gross vehicle weight of 3,500 kg
- with a maximum permissible speed limit of 160 km/h
- the tyres referred to under "Wheel and tyre combinations" (⟶ page 242)

Tyre pressure for the spare wheel is 410 kPa (4.1 bar/59 psi).

Vehicles with a permissible axle load of 1,800 kg on the rear axle

	Partially laden vehicle		Fully laden vehicle	
Tyres/disk wheel	Front axle	Rear axle	Front axle	Rear axle
245/55 R17 XL	250 kPa (2.5 bar/36 psi)	250 kPa (2.5 bar/36 psi)	270 kPa (2.7 bar/39 psi)	300 kPa (3.0 bar/44 psi)

Vehicles with a gross vehicle weight of 3,500 kg and air suspension

The following tyre pressure values apply to the following vehicles:

- with a permissible gross vehicle weight of 3,500 kg
- with a maximum permissible speed limit of 160 km/h
- with air suspension
- the tyres referred to under "Wheel and tyre combinations" (⟶ page 242)

Tyre pressure for the spare wheel is 410 kPa (4.1 bar/59 psi).

Vehicles with a permissible axle load of 1,750 kg on the rear axle

	Partially laden vehicle		Fully laden vehicle	
Tyres/disk wheel	Front axle	Rear axle	Front axle	Rear axle
245/55 R17 XL	250 kPa (2.5 bar/36 psi)	250 kPa (2.5 bar/36 psi)	270 kPa (2.7 bar/39 psi)	300 kPa (3.0 bar/44 psi)
245/50 R18 XL	260 kPa (2.6 bar/38 psi)	260 kPa (2.6 bar/38 psi)	280 kPa (2.8 bar/41 psi)	290 kPa (2.9 bar/42 psi)

Tyre pressure monitoring system

Function of the tyre pressure monitoring system

The system checks the tyre pressure and the tyre temperature of the tyres fitted to the vehicle by means of a tyre pressure sensor.

New tyre pressure sensors, e.g. in winter tyres, are automatically taught-in during the first journey they are used.

It is the driver's responsibility to set the tyre pressure to the recommended cold tyre pressure suitable for the operating situation (→ page 234).

Note that the correct tyre pressure for the current operating situation must first be taught-in to the tyre pressure monitoring system. If a substantial loss of pressure occurs, the warning threshold for the warning message is aligned to the taught-in reference values. Restart the tyre pressure monitor after adjusting to the cold tyre pressure (→ page 237). The current pressures are saved as new reference values. This will ensure that a warning message will only appear if the tyre pressure drops significantly.

The [(!)] warning lamp in the instrument cluster displays a detected pressure loss or a malfunction as follows:

- if the [(!)] warning lamp is lit continuously, the tyre pressure on one or more tyres is significantly too low. The tyre pressure monitor is not malfunctioning.
- if the [(!)] warning lamp flashes for around a minute and then remains lit constantly, the tyre pressure monitor is malfunctioning.
- a message also appears in the instrument cluster.

System limits

The system may be impaired or may not function in the following situations:

- the tyre pressure has been set incorrectly.
- there is a sudden pressure loss caused, for example, by a foreign object penetrating the tyre.
- there is a malfunction caused by another radio signal source.

If the tyre pressure monitor is malfunctioning, it may take more than ten minutes for the [(!)] tyre pressure warning lamp to inform you of the malfunction. When the fault has been rectified, the [(!)] warning lamp goes out after you have driven for a few minutes.

The tyre pressure values indicated by the on-board computer may differ from those measured at a filling station using a pressure gauge.

The tyre pressures shown by the on-board computer refer to those measured at sea level. At high elevations, the tyre pressure values indicated by a pressure gauge are higher than those shown by the on-board computer. In this case, do not reduce the tyre pressures.

Checking the tyre pressure electronically

Requirements:

- The vehicle is switched on.

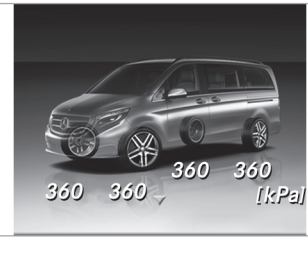

▶ Press the [⌂] button to call up the list of menus.

- Use the ▼ or ▲ button to select Service.
- Press the OK button.
- Use the ▼ or ▲ button to select Tyre pressure.
- Press the OK button.
  The display shows the current tyre pressure of each wheel.

If the vehicle was parked for longer than 20 minutes, the Tyre pressures will be displayed after a few minutes of driving message appears in the display.

ⓘ Also be sure to observe the notes on tyre pressure (→ page 234).

Restarting the tyre pressure monitor

Requirements:
- The vehicle is switched on.
- The recommended tyre pressure is correctly set for the respective operating condition on each of the four wheels (→ page 235).

- Press the ⌂ button to call up the list of menus.
- Use the ▼ or ▲ button to select Service.
- Press the OK button.
- Use the ▼ or ▲ button to select Tyre pressure.
- Press the OK button.
  The display shows the current tyre pressure of each wheel or the Tyre pressures will be displayed after a few minutes of driving message.
- Press the ▼ button.
  The Use current pressures as new reference values message is shown in the display.
- **To confirm restart:** press the OK button.
  After you have driven for a few minutes, the system checks whether the current tyre pressures are within the specified range. The new tyre pressures are then saved as reference values, monitored and displayed.
- **To cancel restart:** press the ↩ button.
  The tyre pressure values stored at the last restart will continue to be monitored.

Changing a wheel

Notes on selecting, fitting and replacing tyres

You can ask for information regarding permitted wheel/tyre combinations at a qualified specialist workshop.

⚠ **WARNING** Risk of accident due to incorrect wheel and tyre dimensions

If wheels and tyres of the wrong size are fitted, the service brakes or components in the brake system and in the wheel suspension may be damaged.

- Always replace wheels and tyres with those that fulfil the specifications of the original part.

For wheels, pay attention to the following:
- Designation
- Type

For tyres, pay attention to the following:
- Designation
- Manufacturer
- Type

⚠ **WARNING** Risk of injury through exceeding the specified tyre load-bearing capacity or the permissible speed rating

Exceeding the load-bearing capacity of the tyres can lead to tyre damage and could cause the tyres to explode.

- Therefore, only use tyre types and sizes approved for your vehicle model.
- Observe the tyre load-bearing capacity rating and speed rating required for your vehicle.

! **NOTE** Vehicle and tyre damage due to tyre types and sizes that have not been approved

For safety reasons, only use tyres, wheels and accessories which have been specially approved by Mercedes-Benz for your vehicle.

These tyres have been specially adapted for use with driving systems and driving safety systems, such as ABS or ESP®.

Otherwise, certain properties, such as handling characteristics, vehicle noise emissions and consumption could be adversely affected.

Other wheel sizes may cause the tyres to come into contact with the vehicle body and axle components when under load. This may result in damage to the tyre or the vehicle.

▶ Only use tyres, wheels and accessories that have been checked and recommended by Mercedes-Benz.

! **NOTE** Driving safety put at risk by retreaded tyres

Retreaded tyres are not checked or recommended by Mercedes-Benz, as previous damage is not always detected during the retread process.

Driving safety cannot, therefore, be guaranteed.

▶ Do not use used tyres when their previous usage is unknown.

! **NOTE** Possible wheel and tyre damage when driving over obstacles

Large wheels have a smaller section width. As the section width decreases, the risk of wheels and tyres being damaged when driving over obstacles increases.

▶ Avoid obstacles or drive especially carefully.

▶ Reduce your speed when driving over kerbs, speed bumps, manhole covers and potholes.

▶ Avoid particularly high kerbs.

! **NOTE** Damage to electronic component parts through the use of tyre-fitting tools

Vehicles with tyre pressure monitoring system: there are electronic component parts in the wheel.

▶ Do not use any fitting tools near the valve.

▶ Only have tyres changed at a qualified specialist workshop.

Accessories that are not approved for your vehicle by Mercedes-Benz, or are not being used correctly, can impair operating safety.

Before purchasing and using non-approved accessories, visit a qualified specialist workshop and enquire about:

- suitability
- legal stipulations
- factory recommendations

Observe the following points when selecting, fitting and replacing tyres:

- Country-specific requirements for tyre approval that define a specific tyre type for your vehicle.

  Furthermore, the use of certain tyre types in certain regions and areas of operation can be highly beneficial.
- Use only tyres and wheels of the same type, design (summer tyres, winter tyres, all-season tyres) and make.
- Only fit wheels of the same size and tread design on one axle (left and right).

  It is only permissible to fit a different wheel size to this in the event of a flat tyre in order to drive to the specialist workshop.
- Only fit tyres of the correct size onto the wheels.
- Do not make any modifications to the brake system, the wheels or the tyres.

  The use of shims or brake dust shields is not permitted and results in the invalidation of the vehicle's general operating permit.
- **Vehicles with a tyre pressure monitoring system:** all fitted wheels must be equipped with functioning sensors for the tyre pressure monitoring system.
- At temperatures below 10°C, use winter tyres or all-season tyres marked M+S for all wheels.

  Winter tyres bearing the snowflake symbol in addition to the M+S marking provide the best possible grip in wintry road conditions.
- For M+S tyres, only use tyres with the same tread.
- Observe the maximum permissible speed for the M+S tyres fitted.

  If this is below the vehicle's maximum permissible speed, this must be indicated in an appropriate label in the driver's field of vision.

- Run in new tyres at moderate speeds for the first 100 km.
- Replace the tyres after six years at the latest, regardless of wear.

For more information on wheels and tyres, contact a qualified specialist workshop.

Also observe the following further related subjects:

- Notes on tyre pressure (→ page 234)
- Tyre pressure table (→ page 235)
- Notes on the emergency spare wheel

Notes on changing wheels

WARNING Risk of injury through different wheel sizes

Interchanging the front and rear wheels can severely impair the driving characteristics.

The disk brakes or wheel suspension components may also be damaged.

▶ Only interchange the front and rear wheels if the wheels and tyres have the same dimensions.

Interchanging the front and rear wheels if the wheels or tyres have different dimensions can render the general operating permit invalid.

On vehicles with the same front and rear wheel size, you can interchange the wheels every 5,000 to 10,000 km depending on the wear. Ensure the direction of rotation is maintained for the wheels.

It is imperative to observe the instructions and safety notes on "Changing a wheel" when doing so.

Information on the direction of tyre rotation

Tyres with a specified direction of rotation have additional benefits, e.g. if there is a risk of aquaplaning. You will only gain these benefits if the correct direction of rotation is observed.

An arrow on the sidewall of the tyre indicates its correct direction of rotation.

You may also fit a spare wheel against the direction of rotation. Observe the time restriction on use as well as the speed restriction specified on the spare wheel.

Information on storing wheels

Observe the following when storing wheels:

- Wheels that have been removed should be stored in a cool, dry and, if possible, dark place.
- Protect the tyres from oil, grease and fuel.

Preparing the vehicle for a wheel change

Requirements:

- The tyre-change tool kit is available.
- The vehicle is not on a slope.
- The vehicle is on solid, non-slippery and level ground.

▶ Apply the parking brake.

▶ Move the front wheels to the straight-ahead position.

▶ Shift the transmission to position P.

▶ Switch off the vehicle.

▶ Make sure that the vehicle cannot be switched on.

▶ **On level terrain:** place chocks or other suitable objects under the front and rear of the wheel that is diagonally opposite the wheel to be changed.

▶ **On slight inclines:** place chocks or other suitable objects under the wheels on the front and rear axles opposite the wheel to be changed.

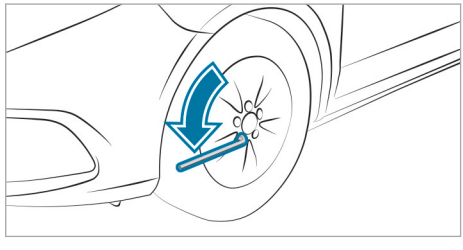

▶ If included in the vehicle equipment, take the tyre-change tool kit out of the vehicle tool kit (→ page 232).

▶ If included in the vehicle equipment, remove the spare wheel from the spare wheel holder (→ page 243).

▶ If necessary, remove the wheel trim.

▶ Using the wheel wrench, loosen the wheel bolts on the wheel you wish to change by about one full turn. Do not unscrew the wheel bolts.

▶ Raise the vehicle (→ page 240).

Raising the vehicle when changing a wheel

WARNING Risk of injury from incorrect positioning of the jack

If you do not position the jack correctly at the appropriate jacking point of the vehicle, the jack could tip with the vehicle raised.

▶ Only position the jack at the appropriate jacking point of the vehicle. The base of the jack must be positioned vertically under the jacking point of the vehicle.

WARNING Risk of injury from vehicle tipping

On slopes, the jack could tip with the vehicle raised.

▶ Never change a wheel on a slope.

▶ Consult a qualified specialist workshop.

NOTE Damage to the vehicle due to the jack

If you do not position the jack at the jack support points provided for this purpose, you could damage your vehicle.

▶ Only position the jack at the jack support points provided for this purpose.

Requirements:

- There are no persons in the vehicle.
- The vehicle is prepared for changing a wheel (→ page 239).

Important notes on using the jack:

- Only use the vehicle-specific jack that has been tested and approved by Mercedes-Benz to raise the vehicle. If the jack is used incorrectly, it could tip over while the vehicle is raised.
- The jack is designed only to raise the vehicle for a short time while a wheel is being changed and is not suitable for carrying out maintenance work under the vehicle.
- Avoid changing a wheel on uphill and downhill slopes.
- The jack must be placed on a firm, flat and non-slip surface. If necessary, use a large, flat, load bearing and non-slip underlay.
- The foot of the jack must be positioned vertically under the jack support point.

Safety instructions while the vehicle is raised:

- Do not put your hands or feet under the vehicle.
- Do not lie underneath the vehicle.
- Do not start the vehicle and do not release the parking brake.
- Do not open or close any doors.

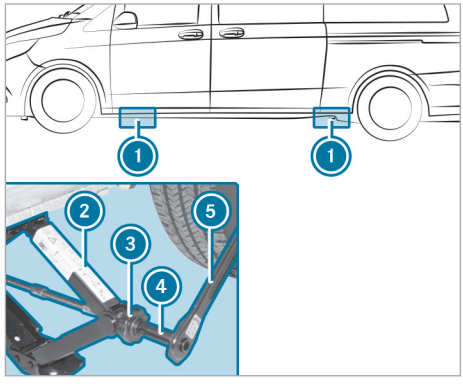

Jack support points ① (rubber stoppers) are located behind the front wheel arches and in front of the rear wheel arches.

▶ Place jack ② beneath corresponding jack support point ①.

▶ Turn handwheel ③ until plate of jack ② sits securely on jack support point ①.

▶ Ensure that the base of jack ② is positioned vertically under jack support point ①.

▶ Assemble adapter ④ and ratchet ⑤ from the vehicle tool kit.

▶ Place adapter ④ and ratchet ⑤ on the hexagon nut of jack ② so that the lettering AUF/UP is visible.

▶ Turn ratchet wrench ⑤ in the AUF/UP direction until the tyre is raised a maximum of 3 cm off the ground.
When doing so, jack ② may move to one of the side support surfaces.

Removing a wheel

Requirements:
- The vehicle is raised (→ page 240).

When changing a wheel, avoid applying any force to the brake discs since this could impair the level of comfort when braking.

NOTE Damage to threading from dirt on wheel bolts

▶ Do not place wheel bolts in sand or on a dirty surface.

▶ Unscrew the wheel bolts.

▶ Remove the wheel.

Fitting a new wheel

Requirements
- The wheel is removed (→ page 241).

WARNING Risk of accident from losing a wheel

Oiled or greased wheel bolts can cause the wheel bolts to come loose, as too can damaged wheel bolts or wheel hub threads.

▶ Never oil or grease the threads.

▶ In the event of damage to the threads, contact a qualified specialist workshop immediately.

▶ Have the damaged wheel bolts or damaged hub threads replaced.

▶ Do not continue driving.

WARNING Risk of injury from tightening wheel bolts and nuts

If you tighten the wheel bolts or wheel nuts when the vehicle is raised, the jack could tip.

▶ Only tighten wheel bolts or wheel nuts when the vehicle is on the ground.

▶ Observe the information on the choice of tyres (→ page 237).

▶ Observe the instructions and safety notes on changing a wheel (→ page 237).

▶ For safety reasons, only use wheel bolts or wheel nuts which have been approved by Mercedes-Benz and for the wheel in question.

▶ Clean the wheel and wheel hub contact surfaces.

Lowering the vehicle after a wheel change

WARNING Risk of accident due to incorrect tightening torque

The wheels could come loose if the wheel bolts or wheel nuts are not tightened to the prescribed torque.

▶ Ensure that the wheel bolts or wheel nuts are tightened to the prescribed tightening torque.

▶ If you are not sure, do not move the vehicle. Contact a qualified specialist workshop and have the tightening torque checked immediately.

Requirements:
- The new wheel has been fitted (→ page 241).

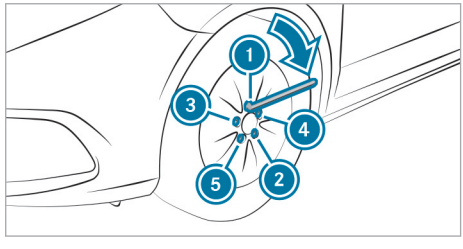

▶ Place the adapter and the ratchet on the hexagon head nut of the jack such that the lettering AB/DOWN is visible.

▶ **To lower the vehicle:** turn the ratchet of the jack anti-clockwise.

▶ Tighten the wheel bolts evenly in a crosswise pattern in the sequence indicated (1 to 5) and to a maximum of 180 Nm.

▶ Check the tyre pressure of the newly fitted wheel and adjust it if necessary.

Vehicles with a tyre pressure monitoring system: all fitted wheels must be equipped with functioning sensors.

▶ Retighten the wheel bolts to the specified tightening torque after the vehicle has been driven 50 km.

ⓘ When using a wheel or spare wheel with a new or newly painted disk wheel, have the wheel bolts retightened again after approximately 1,000 to 5,000 km. Observe the specified tightening torque.

Information on wheel and tyre combinations

General notes

Information on tyres, wheels and permissible combinations can be obtained at a qualified specialist workshop.

The smaller the cross-section of a tyre of a specific wheel size, the worse the driving comfort on poor road surfaces. Ride and damping comfort are reduced and the risk increases that when you drive over obstacles, damage to wheels and tyres may result.

If you change wheel size on your vehicle, check it is assigned to the correct wheel size category . If the assignment changes without recoding the control units in the vehicle, the speedometer will not display the speed accurately. Driving safety systems and driving systems may then be operationally impaired or may detect a malfunction and switch themselves off.

You will find a table with the recommended tyre pressures for various vehicle loads inside the flap on the left B-pillar or under "Tyre pressure tables" (⟶ page 235).

Check tyre pressures regularly and only when the tyres are cold.

Observe the following notes:

- always fit the vehicle with tyres of the same size on a given axle (left/right)
- always fit the same type of wheels on your vehicle at a given time (summer tyres, winter tyres)

You can obtain information about tyres that have been specially designed and approved for your vehicle from a Mercedes-Benz Service Centre.

ⓘ Not all wheel/tyre combinations can be fitted at the factory in all countries.

Tyres

R17

Tyres	Light-alloy wheels
245/55 R17 XL 106H	7 J x 17 H2 ET 51

R18 (only for vehicles with air suspension and a permissible axle load of 1,750 kg on the rear axle).

Tyres	Light-alloy wheels
245/50 R18 XL 104H	7.5 J x 18 H2 ET 52

Spare wheel

Fitting and removing the spare wheel

Removing the spare wheel under the rear of the vehicle

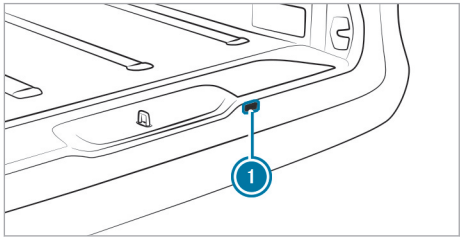

- Take the wheel wrench and auxiliary tool for the spare wheel lifter out of the vehicle tool kit (→ page 231).
- Carefully prise off cover cap 1 with a suitable tool, e.g. a screwdriver. Be careful not to damage the paintwork or the covering cap when doing so.

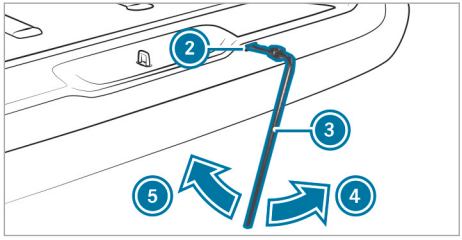

- Push auxiliary tool 2 through the opening into the space wheel winch guide.
- Attach wheel wrench 3 to auxiliary tool 2 for the spare wheel lifter.
- Turn wheel wrench 3 in the direction of arrow 5 until you feel resistance or until the friction clutch of the spare wheel winch overwinds afterwards.
  The spare wheel is lowered.

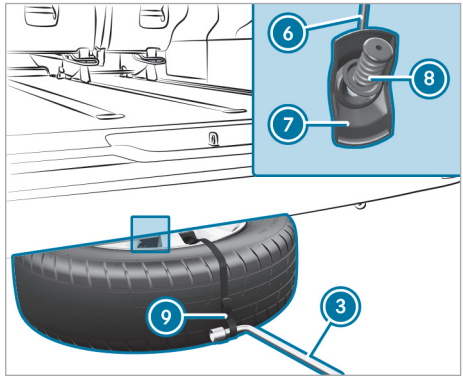

- Hook wheel wrench 3 into loop of extraction device 9 on the spare wheel.
- Pull the spare wheel from under the vehicle with wheel wrench 3.
- Press cable 6 downwards and hold spring 8 at an angle against wheel gripper 7.
  Wheel gripper 7 is released.
- Remove extraction device 9 from the wheel and store it in a safe place.
- Pull wheel gripper 7 out of the wheel brace.

Fitting the spare wheel under the rear of the vehicle

- Take wheel wrench 3 and auxiliary tool 2 for the spare wheel lifter out of the vehicle tool kit (→ page 231).
- Place the wheel on the ground with the wheel brace pointing upwards.
- Guide wheel gripper 7 at an angle on wire 6 from above into the wheel brace.
- Secure extraction device 9 to the wheel.
- Slide the wheel slightly under the vehicle.
- Attach wheel wrench 3 to auxiliary tool 2 for the spare wheel lifter.
- Turn wheel wrench 3 in the direction of arrow 4 until you feel resistance and the friction clutch of the spare wheel winch overwinds in jerks.
  The wheel is firmly secured to the underside of the vehicle.
- Pull wheel wrench 3 and auxiliary tool 2 for the spare wheel lifter out of the opening for the spare wheel winch.
- Close the spare wheel winch opening with cover cap 1.

- Stow wheel wrench ③ and auxiliary tool ② for the spare wheel lifter in the vehicle tool kit.

Information on the technical data

The technical data was determined in accordance with EU Directives. The given data only applies to vehicles with standard equipment. You can obtain further information at a qualified specialist workshop.

Only for certain countries: you can find vehicle-specific vehicle data in the COC documents (CERTIFICATE OF CONFORMITY). These documents are supplied when the vehicle is delivered.

On-board electronics

Notes on work on the engine electronics

NOTE Premature wear through improper maintenance

Improper maintenance may cause vehicle components to wear more quickly and the vehicle's operating permit may be invalidated.

- Always have work on the engine electronics and related components carried out at a qualified specialist workshop.

Two-way radios

Installation notes for two-way radios

WARNING Risk of accident due to improper work on two-way radios

If two-way radios are manipulated or retrofitted incorrectly, the electromagnetic radiation from the two-way radios can interfere with the vehicle electronics and jeopardise the operating safety of the vehicle.

- You should have all work on electrical and electronic components carried out at a qualified specialist workshop.

WARNING Risk of accident due to improper operation of two-way radios

If you use two-way radios in the vehicle improperly, their electromagnetic radiation can disrupt the vehicle's electronics. This is the case in the following situations, in particular:

- The two-way radio is not connected to an exterior aerial.
- The exterior aerial is fitted incorrectly or is not a low-reflection aerial.

This could jeopardise the operating safety of the vehicle.

- Have the low-reflection exterior aerial fitted at a qualified specialist workshop.
- When operating two-way radios in the vehicle, always connect them to the low-reflection exterior aerial.

NOTE Invalidation of the operating permit due to failure to comply with the instructions for installation and use

The operating permit may be invalidated if the instructions for installation and use of two-way radios are not observed.

- Only use approved frequency bands.
- Observe the maximum permissible output power in these frequency bands.
- Only use approved aerial positions.

Use Technical Specification ISO/TS 21609 (Road Vehicles - EMC guidelines for installation of aftermarket radio frequency transmitting equipment) when retrofitting two-way radios. Comply with the legal requirements for detachable parts.

If your vehicle has fittings for two-way radio equipment, use the power supply or aerial connections intended for use with the fittings. Observe the manufacturer's supplements during installation.

Mobile telephony transmission output

The maximum transmission outputs (PEAK) at the base of the aerial must not exceed the values in the following table:

Frequency band and maximum transmission output

Frequency band	Maximum transmission output
Short wave 3 – 54 MHz	100 W
4-m-frequency band 74 – 88 MHz	30 W
2 -m- frequency band 144 – 174 MHz	50 W
Trunked radio system/ Tetra 380 – 460 MHz	10 W

Frequency band	Maximum transmission output
70-cm- frequency band 420 – 450 MHz	35 W
Two-way radio (2G/3G/4G)	10 W

The following devices can be used in the vehicle without restrictions:

- Two-way radios with a maximum transmission output of up to 100 mW
- Two-way radios with transmitter frequencies in the 380 - 410 MHz frequency band and a maximum transmission output of up to 2 W (trunked radio system/Tetra)
- Mobile phones (2G/3G/4G)

There are no restrictions when positioning the antenna on the outside of the vehicle for the following frequency bands:

- Trunked radio system/Tetra
- 70-cm- frequency band
- 2G/3G/4G

Radio regulations

Specific information on wireless applications in accordance with 2014/53/EU

Type of wireless application and specification in accordance with 2014/53/EU

Besides the typical frequencies for mobile communication cars by Mercedes-Benz make use of the following automotive radio applications.

Type of wireless application and specification in accordance with 2014/53/EU

Technology	Frequency range	Transmission output/magnetic field strength
Remote Keyless Entry	20 kHz (9–90 kHz)	≤ 72 dBµA/m at 10m
Wireless Power Transmission	105 kHz (90–119 kHz)	≤ 42 dBµA/m at 10m
Remote Keyless Entry	120 kHz (119–135 kHz)	≤ 42 dBµA/m at 10m
Wireless Power Transmission	127 kHz (119–135 kHz)	≤ 66 dBµA/m at 10m with the magnetic field strength level decreasing 3dB/octave above 119 kHz
Near-field communication	13.553–13.567 MHz	≤ 42 dBµA/m at 10m
Remote Keyless Entry, Garage Door Opener, Tire Pressure Monitoring	433 MHz (433.05–434.79 MHz)	≤ 10 mW ERP
Block Heater Remote Control, Garage Door Opener	868 MHz (868.0–868.6 MHz)	≤ 25 mW ERP
Block Heater Remote Control, Garage Door Opener	869 MHz (868.7–869.2 MHz)	≤ 25 mW ERP
Bluetooth, Kleer, RLAN, wireless Headphones	2.4 GHz ISM band (2400–2483.5 MHz)	≤ 100 mW EIRP
RLAN	5.1 GHz UNII-1 (5150–5250 MHz)	≤ 25 mW EIRP
Interior Monitoring Radar, RLAN	5.8 GHz UNII-3 (5725–5875 MHz)	≤ 25 mW EIRP

Technology	Frequency range	Transmission output/magnetic field strength
Remote Keyless Entry	7.25 GHz UWB (6.0–8.5 GHz)	≤ -41.3 dBm/MHz EIRP mean ≤ 0 dBm/MHz EIRP peak
76 GHz radar	76–77 GHz	≤ 55 dBm peak EIRP
Hermes (communication module)	GSM: EGSM900, Class 4 GSM: EGSM1800, Class 1 GSM: EGSM900 8-PSK, Class E2 GSM: EGSM1800 8-PSK, Class E2	< +33 dBm (±2 dB) < +30 dBm (±2 dB < +27 dBm (±3 dB) < +26 dBm (±3 dB/-4 dB)
	UMTS 2100: WCDMA FDD B 1, Class 3	< +24 dBm (±1 dB/-3 dB)
	LTE: FDD BI/BIII, Class 3 LTE: TDD B38/B39/B40/B41, Class 3	< +23 dBm (±2 dB)
Onboard Logic Unit (OLU)	GSM 900 (880–915 MHz / 925–960 MHz)	33 dBm (2 W)
	GSM 1800 (1710–1785 MHz / 1805–1880 MHz)	30 dBm (1 W)
	WCDMA FDDI (1920–1980 MHz / 2110–2170 MHz)	24 dBm (0.25 W)
	WCDMA FDDVIII (880–915 MHz / 925–960 MHz)	24 dBm (0.25 W)
	LTE FDD1 (1920–1980 MHz / 2110–2170 MHz)	23 dBm (0.2 W)
	LTE FDD3 (1710–1785 MHz / 1805–1880 MHz)	23 dBm (0.2 W)
	LTE FDD7 (2500–2570 MHz / 2620–2690 MHz)	23 dBm (0.2 W)
	LTE FDD8 (880–915 MHz / 925–960 MHz)	23 dBm (0.2 W)
	LTE FDD20 (832–862 MHz / 791–821 MHz)	23 dBm (0.2 W)
	LTE TDD38 (2570–2620 MHz / 2570–2620 MHz)	23 dBm (0.2 W)

Further information and updates are available at the following web address:

https://regulatoryradioinformation.corpinter.net/vans/vans/en

Regulatory radio identifiers and specific notes

Manufacturer information about radio-based vehicle components can be found using the key phrase "Regulatory radio information" in the Digital Owner's Manual in the vehicle, on the internet and in the app.

Further information and updates are available at the following web address:

https://regulatoryradioinformation.corpinter.net/vans/vans/en

Information about the specific absorption rate (SAR)

Information about the specific absorption rate (SAR) can be found using the key phrase "Regulatory radio information" in the Digital Owner's Manual in the vehicle, on the internet and in the app.

Further information and updates are available at the following web address:

https://regulatoryradioinformation.corpinter.net/vans/vans/en

Importer information for regulatory radio components

Importer information about radio-based vehicle components can be found using the key phrase "Regulatory radio information" in the Digital Owner's Manual in the vehicle, on the internet and in the app.

Further information and updates are available at the following web address:

https://regulatoryradioinformation.corpinter.net/vans/vans/en

Vehicle identification plate, vehicle identification number (VIN) and engine number

Vehicle identification plate

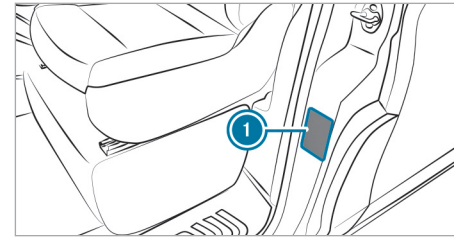

Vehicle identification plate ① is on the B-pillar on the driver's side.

ⓘ The data is vehicle-specific and can differ from that shown. Always observe the specifications on your vehicle's identification plate.

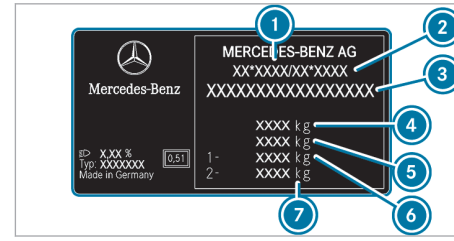

Vehicle identification plate (Example)

① Vehicle manufacturer
② EU general operating permit number (only for certain countries)
③ VIN (vehicle identification number)
④ Permissible gross mass (kg)
⑤ Permissible gross mass of vehicle combination (kg) (for specific countries only)
⑥ Permissible front axle load (kg)
⑦ Permissible rear axle load (kg)

Engraved VIN in the engine compartment

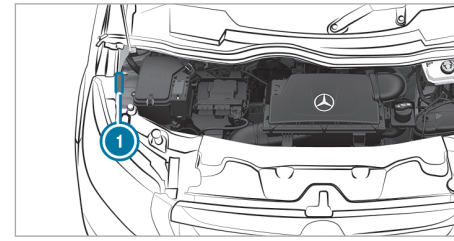

The VIN ① is engraved into the longitudinal member in the engine compartment next to the fuse box.

Electric motor number

The electric motor number is attached to the bottom of the electric motor. You can obtain further information from a qualified specialist workshop.

Operating fluids and capacities

Notes on operating fluids

WARNING Risk of injury due to harmful operating fluids

Operating fluids can be toxic.

- When using, storing and disposing of operating fluids, observe the imprints on the respective original containers.
- Always keep operating fluids in the sealed original container.
- Always keep children away from operating fluids.

ENVIRONMENTAL NOTE Pollution of the environment due to irresponsible disposal of operating fluids

Incorrect disposal of operating fluids can cause considerable damage to the environment.

- Dispose of operating fluids in an environmentally responsible manner.

Operating fluids include the following:

- Lubricants
- Coolant
- Brake fluid
- Windscreen washer fluid
- Climate control system refrigerant

Only use products which have been approved for your vehicle by Mercedes-Benz. Damage caused to the vehicle by the use of products that have not been approved is not covered by the Mercedes-Benz warranty or goodwill gestures.

You can identify operating fluids approved by Mercedes-Benz by the following labels on the container:

- MB-Freigabe (e.g. MB-Freigabe 229.51)
- MB-Approval (e.g. MB-Approval 229.51)

Further information on approved operating fluids is available at the following locations:

- In the Mercedes-Benz Specifications for operating fluids at https://operatingfluids.mercedes-benz.com (with details of specification).
- At a qualified specialist workshop

Additives for approved operating fluids are neither required nor permitted. Additives can cause engine damage and must therefore not be added to the operating fluids.

The use of additives is always the responsibility of the vehicle operator. The use of additives may result in the restriction or loss of your warranty claims.

Notes on brake fluid

Observe the notes on operating fluids (→ page 249).

WARNING Risk of an accident due to vapour pockets forming in the brake system

The brake fluid constantly absorbs moisture from the air. This lowers the boiling point of the brake fluid. If the boiling point is too low, vapour pockets may form in the brake system when the brakes are applied hard.

This impairs the braking effect.

- Have the brake fluid renewed at the specified intervals.

NOTE Damage to paint, plastic or rubber by brake fluid

There is a risk of damage to property if brake fluid comes into contact with paint, plastic or rubber.

- If paint, plastic or rubber comes into contact with brake fluid, rinse with water immediately.

Observe the notes on paintwork/matt finish paintwork care (→ page 218).

Have the brake fluid renewed every two years at a qualified specialist workshop.

Only use brake fluid approved by Mercedes-Benz in accordance with MB-Freigabe or MB-Approval 331.0.

Information on brake fluid is available at the following locations:

- In the Mercedes-Benz Specifications for Operating Fluids 331.0at https://operatingfluids.mercedes-benz.com
- At a qualified specialist workshop

Coolant

Notes on coolant

Observe the notes on operating fluids (→ page 249).

WARNING Risk of fire- and injury from antifreeze

If antifreeze comes into contact with hot component parts in the engine compartment, it may ignite.

- ▶ Allow the drive system to cool down before you top up the antifreeze.
- ▶ Make sure that no antifreeze spills out next to the filler opening.
- ▶ Thoroughly clean the antifreeze from component parts before starting the vehicle.

NOTE Damage caused by incorrect coolant

- ▶ Only add coolant that has been premixed with the required antifreeze protection.

Information on coolant is available at the following locations:

- In the Mercedes-Benz Specification for Operating Fluids 320.1 at https://operatingfluids.mercedes-benz.com
- At a qualified specialist workshop

NOTE Overheating at high outside temperatures

If an inappropriate coolant is used, the engine cooling system is not sufficiently protected against overheating and corrosion at high outside temperatures.

- ▶ Always use coolant approved for Mercedes-Benz.
- ▶ Observe the instructions in the Mercedes-Benz Specification for Operating Fluids 320.1.

NOTE Paintwork damage due to coolant

- ▶ Do not spill coolant on painted surfaces.

Have the coolant regularly replaced at a qualified specialist workshop.

Note the proportion of anti-corrosion agent/antifreeze in the engine cooling system within the following temperature ranges:

- A minimum of 50% (antifreeze protection down to about -37°C)
- A maximum of 55% (antifreeze protection down to -45°C)

Windscreen washer fluid

Notes on windscreen washer fluid

Observe the notes on operating fluids (→ page 249).

WARNING Risk of fire and injury from windscreen washer concentrate

Windscreen washer concentrate is highly flammable. If it comes into contact with hot components, it may ignite.

- ▶ Make sure that windscreen washer concentrate is not spilled near to the filler opening.

NOTE Damage to the exterior lighting due to unsuitable windscreen washer fluid

Unsuitable windscreen washer fluids may damage the plastic surface of the exterior lighting.

- ▶ Only use windscreen washer fluids which are also suitable for use on plastic surfaces, e.g. MB SummerFit or MB WinterFit.

NOTE Blocked spray nozzles caused by mixing windscreen washer fluids

- ▶ Do not mix MB SummerFit and MB WinterFit with other windscreen washer fluids.

Do not use distilled or de-ionised water. Otherwise, the fill level sensor may give a false reading.

Recommended windscreen washer fluid:

- Above freezing point: e.g. MB SummerFit
- Below freezing point: e.g. MB WinterFit

For the correct mixing ratio, refer to the information on the anti-freeze container.

Mix the washer fluid with windscreen washer fluid all year round.

Vehicle data

Information on vehicle dimensions

The following section contains important technical data for your vehicle. Your vehicle documents contain further vehicle-specific and equipment-dependent technical data, e.g. vehicle dimensions and weights.

The values specified may vary as a result of the following variables:

- tyres
- load
- condition of the suspension
- optional equipment

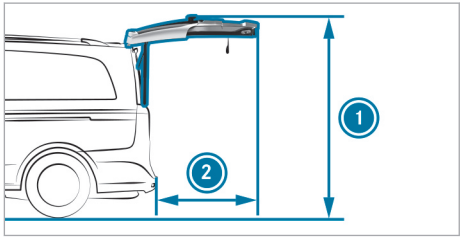

Swept height

All models	
1 Swept height of the tailgate (long version)	2210 mm or 2222 mm
1 Swept height of the tailgate (extra-long version)	2205 mm or 2210 mm or 2216 mm

Swept width

All models	
2 Swept width of the tailgate	1047 mm

Vehicle dimensions

All models	
Vehicle length (long version)	5140 mm
Vehicle length (extra-long version)	5370 mm
Vehicle width including exterior mirrors	2249 mm
Vehicle width excluding exterior mirrors	1928 mm
Load width	1205 mm
Load height (long version)	1326 mm
Load height (extra-long version)	1297 mm
Vehicle height (long version))	1923 mm or 1926 mm or 1933 mm
Vehicle height (extra-long version)	1920 mm or 1923 mm or 1931 mm
Wheelbase (long version)	3200 mm
Wheelbase (extra-long version)	3430 mm

High-voltage battery

Notes on the energy supply for vehicles with a high-voltage battery

In accordance with European standard EN 17186:2019, vehicle identifiers are located on the vehicle in the following places:

- On the inside of the socket flap
- On the charging cable connector

In addition, charging stations in European countries are equipped with energy supply identifiers. You can recharge your vehicle at charging stations where the charging station identifier corresponds to the vehicle identifier.

For further information on charging the high-voltage battery, refer to the "Charging the high-voltage battery" section (→ page 136).

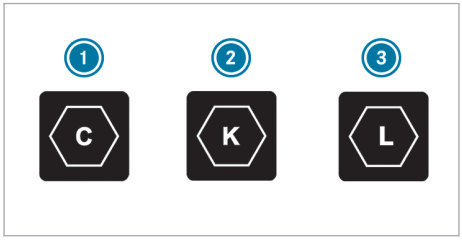

1. Supply type: AC
   Standard: EN 62196-2
   Style: Type 2
   Plug type: charging cable socket and vehicle plug
   Voltage range: 480 V RMS
2. Supply type: DC
   Standard: EN 62196-3
   Style: FF
   Plug type: charging cable socket and vehicle plug
   Voltage range: 50 V to 500 V
3. Supply type: DC
   Standard: EN 62196-3
   Style: FF
   Plug type: charging cable socket and vehicle plug
   Voltage range: 200 V to 920 V

Energy content and charging times

High-voltage battery 60 kWh	
Type	Lithium-ion
Usable energy content	60 kWh
Charging time – mode 4 with up to 50 kW charging capacity	Approx. 50 min
Charging time – mode 4 (optional) with up to 80 kW charging capacity	Approx. 35 min
Charging time – mode 3 with up to 11 kW charging capacity	Approx. 6 h 30 min

Energy content and charging times

High-voltage battery 90 kWh	
Type	Lithium-ion
Usable energy content	90 kWh
Charging time – mode 4 with up to 110 kW charging capacity	Approx. 40 min
Charging time – mode 3 with up to 11 kW charging capacity	Approx. 10 h

Charging time – mode 3 applies to alternating current charging from 0 % to 100 % of the usable battery capacity.

The charging time – mode 4 applies to DC charging from 10 % to 80 % of the usable battery capacity under optimum conditions at the charging station (with supply voltage 400 V, current 300 A). The charging time may vary depending on various factors such as battery- and ambient temperature or if additional auxiliary consumers (e.g. heating) are being used.

The lower the ambient temperature, the longer the charging time. In addition to the ambient temperature and the battery charge status, charging capacity determines the charging time. The maximum charging capacity depends on supply voltage, current intensity, the type of power supply, and the charge level of the battery when charging is started.

Lashing points and carrier systems

Loading capacity of the lashing points and tie-down eyes

Observe the notes on securing loads (→ page 206).

Nominal tensile load is the maximum permissible pulling force on the lashing point.

Guide rails

The nominal tensile load of the lashing points of a guide rail is 350 daN if you observe the following:

- the load on the load compartment floor is secured to two lashing points on the rail
- the distance to the nearest load-securing point on the same rail is approximately 1 m

Information about roof luggage racks

Observe the notes on the carrier systems (→ page 211).

! **NOTE** Damage due to exceeding the maximum permissible roof load

If the weight of the roof luggage, including the roof luggage rack, exceeds the maximum permissible roof load, this can cause damage to the vehicle.

- ▶ Do not exceed the maximum permissible roof load.
- ▶ Arrange the supporting feet of the roof luggage rack at an even distance from each other.
- ▶ Install the basic carrier bars for rail in front of and behind the mid-section support.

Maximum roof load / pairs of roof rack supports

Maximum roof load	Minimum number of pairs of supports
150 kg	3

This information applies if the load is distributed evenly across the entire roof area.

If the roof luggage rack is shorter, reduce the load proportionately. The maximum permitted load per pair of roof rack supports is 50 kg. The maximum permitted load of basic carrier bars for rail is 100 kg.

The driving, braking and steering characteristics of the vehicle will change with the type of load, the weight and the centre of gravity of the load. Comply with the loading guidelines and further information about load distribution (→ page 205).

Display messages

Introduction

Notes on display messages

WARNING Risk of accident due to an instrument cluster malfunction

In the event of a failure or malfunction of the instrument cluster, you will not recognise limitations in the functions of systems relevant to safety. This may impair operating safety.

▶ Park the vehicle safely as soon as possible and notify a qualified specialist workshop.

The on-board computer shows messages and warnings from specific systems on the instrument cluster display. Ensure that your vehicle is operating safely at all times.

Display messages with graphic symbols are simplified in the Owner's Manual and may differ from the symbols on the display.

Calling up saved display messages

The on-board computer saves specific display messages to the message memory. You can call up the saved display messages. Use the buttons on the steering wheel.

▶ Press the [⌂] button to call up the list of menus.

▶ With the [▼] or [▲] button, select the Service menu.
The bar will show the number of saved messages.

▶ Press [OK] to confirm.
The first saved display message will be displayed.

If there are no display messages, the display will show No messages.

▶ Press the [▼] or [▲] button to scroll through the display messages.
All saved display messages are numbered in the message memory. The current message number is shown on the lowest bar of the display as a means of orientation, together with the number of saved display messages.

▶ Press [⇦] to exit the display messages screen.

Safety systems

Display messages	Possible causes/consequences and ▶ Solutions
Front-passenger airbag disabled See Owner's Manual	* The front passenger airbag is disabled while the vehicle is in motion even though an adult or a person with a corresponding build is occupying the front passenger seat. If additional forces are applied to the seat or the front passenger is not sitting on the seat surface properly (→ page 34), the weight the system detects may be too low. ⚠ **WARNING** - Risk of injury or even fatal injury when the front passenger airbag is disabled If the front passenger airbag is disabled, It will not be deployed in the event of an accident and cannot perform its intended protective function. A person in the front passenger seat could then, for example, come into contact with the vehicle interior, especially if the person is sitting too close to the dashboard. ▶ Be aware of the status of the front passenger airbag both before and during the journey. ▶ Stop the vehicle immediately in accordance with the traffic conditions. ▶ Secure the vehicle against rolling away. ▶ Ensure that no objects have become trapped beneath the front passenger seat. ▶ Switch off the vehicle. ▶ The front passenger must get out of the vehicle. ▶ Make sure that the front passenger seat is unoccupied, close the front passenger door and switch on the vehicle. ▶ Observe the PASSENGER AIRBAG OFF indicator lamp on the centre console and the display messages. ▶ With the seat unoccupied and the vehicle switched on, check the following: • The PASSENGER AIRBAG OFF indicator lamp must light up continuously. If the indicator lamp is lit, the automatic front passenger airbag shutoff has disabled the front passenger airbag (→ page 34). • The display must not show the messages Front-passenger airbag enabled See Owner's Manual or Front-passenger airbag disabled See Owner's Manual. ▶ Wait for at least one minute until the necessary system checks have been completed. ▶ Ensure that the display does not show either of the two display messages about the front passenger airbag. If these conditions are met, the front passenger seat can be occupied again. If these conditions are not met, the automatic front passenger airbag shutoff is malfunctioning.

Display messages	Possible causes/consequences and ▶ Solutions
	▶ Consult a qualified specialist workshop immediately. Further information on airbag shutoff can be found under "Automatic front passenger airbag shutoff" (→ page 34).
Front-passenger airbag enabled See Owner's Manual	* The front passenger airbag is enabled while the vehicle is in motion although: • the front passenger seat is occupied by a child in a child restraint system or a person of small stature. or • the front passenger seat is not occupied. The system may detect objects or forces that are adding to the weight applied to the seat. ⚠ **WARNING** Risk of injury or death when using a rearward-facing child restraint system while the front passenger airbag is enabled If you secure a child in a rearward-facing child restraint system on the front passenger seat and the PASSENGER AIR BAG OFF indicator lamp is off, the front passenger airbag can deploy in the event of an accident. The child could be struck by the airbag. ▶ Always ensure that the front passenger airbag is disabled. The PASSENGER AIR BAG OFF indicator lamp must be lit. ▶ NEVER use a rearward-facing child restraint system on a seat with an ENABLED FRONT AIRBAG. This can result in the DEATH of or SERIOUS INJURY to the CHILD. ▶ Stop the vehicle immediately in accordance with the traffic conditions. ▶ Secure the vehicle against rolling away. ▶ Ensure that no objects have become trapped beneath the front passenger seat. ▶ Switch off the vehicle. ▶ Open the front passenger door. ▶ Remove the child and the child restraint system from the front passenger seat. ▶ Make sure there are no objects applying additional weight to the seat. The system may otherwise detect the additional weight and interpret the vehicle occupant's weight on the front passenger seat as greater than it actually is. ▶ Make sure that the front passenger seat is unoccupied, close the front passenger door and switch on the vehicle. ▶ Observe the PASSENGER AIRBAG OFF indicator lamp on the centre console and the display. ▶ With the seat unoccupied and the vehicle switched on, check the following:

Display messages	Possible causes/consequences and ▶ Solutions
	• The PASSENGER AIRBAG OFF indicator lamp must light up continuously. If the indicator lamp is lit, the automatic front passenger airbag shutoff has disabled the front passenger airbag. • The display must not show the messages Front-passenger airbag enabled See Owner's Manual or Front-passenger airbag disabled See Owner's Manual. ▶ Wait for at least one minute until the necessary system checks have been completed. ▶ Ensure that the display does not show either of the two display messages about the front passenger airbag. If these conditions are met, the front passenger seat can be occupied again. Observe the notes on seat occupancy recognition and the result of the classification of the automatic front passenger airbag shutoff (→ page 34). If these conditions are not met, the automatic front passenger airbag shutoff is malfunctioning. ▶ Fit the child restraint system on a suitable rear seat. or ▶ Seat a person of small stature on a suitable rear seat. ▶ Consult a qualified specialist workshop immediately. Further information on airbag shutoff can be found under "Automatic front passenger airbag shutoff" (→ page 34).
Check brake pad wear	* The brakepads have reached their wear limit. ▶ Consult a qualified specialist workshop.
 Check brake fluid level	* There is insufficient brake fluid in the brake fluid reservoir. ⚠ **WARNING** Risk of an accident due to low brake fluid level If the brake fluid level is too low, the braking effect and the braking characteristics may be impaired. ▶ Stop the vehicle as soon as possible, paying attention to road and traffic conditions. Do not continue driving. ▶ Consult a qualified specialist workshop. ▶ Do not top up the brake fluid.

Display messages	Possible causes/consequences and ▶ Solutions
EBD ABS inoperative See Owner's Manual	* EBD is unavailable due to a malfunction. This means that ABS, BAS, Hill Start Assist and ESP® as well as its driving safety systems, for example, are also unavailable. ATTENTION ASSIST is deactivated and other driving systems could be automatically deactivated. The brake system continues to function normally, but without the functions listed above. ⚠ **WARNING** Risk of skidding if EBD, ABS and ESP® are malfunctioning The wheels may block during braking and ESP® does not perform any vehicle stabilization. The steerability and braking characteristics are heavily impaired and the braking distance may increase. In addition, other driving safety systems are switched off. ▶ Drive on carefully. ▶ Have the brake system checked immediately at a qualified specialist workshop.
ABS currently unavailable See Owner's Manual	* ABS, BAS, Hill Start Assist and ESP® as well as its driving safety systems are temporarily unavailable. ATTENTION ASSIST is deactivated and other driving systems could be automatically deactivated. The on-board electrical system voltage may be insufficient, for example. The brake system continues to function normally, but without the functions listed above. ⚠ **WARNING** Risk of skidding if ABS and ESP® are malfunctioning The wheels may block during braking and ESP® does not perform any vehicle stabilization. The steerability and braking characteristics are heavily impaired and the braking distance may increase. In addition, other driving safety systems are switched off. ▶ Drive on carefully. ▶ Have ABS and ESP® checked immediately at a qualified specialist workshop. ▶ Drive on carefully and, on a suitable stretch of road, make some slight steering movements at a speed above 20 km/h. ▶ Check whether the display message has disappeared and ESP® is operational. If the display message continues to be shown: ▶ Drive on carefully. ▶ Consult a qualified specialist workshop immediately.

Display messages	Possible causes/consequences and ▶ Solutions
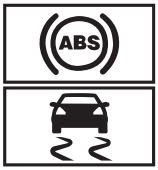 inoperative See Owner's Manual	* ABS, BAS, Hill Start Assist and ESP® as well as its driving safety systems are unavailable due to a malfunction. ATTENTION ASSIST is deactivated and other driving systems could be automatically deactivated. The brake system continues to function normally, but without the functions listed above. ⚠ **WARNING** Risk of skidding if ABS and ESP® are malfunctioning The wheels may block during braking and ESP® does not perform any vehicle stabilization. The steerability and braking characteristics are heavily impaired and the braking distance may increase. In addition, other driving safety systems are switched off. ▶ Drive on carefully. ▶ Have ABS and ESP® checked immediately at a qualified specialist workshop. ▶ Drive on carefully. ▶ Have ABS and ESP® checked immediately at a qualified specialist workshop.
 inoperative See Owner's Manual	* ESP®, BAS and Hill Start Assist are unavailable due to a malfunction. ATTENTION ASSIST is deactivated and other driving systems could be automatically deactivated. The brake system continues to function normally, but without the functions listed above. The wheels could therefore lock up at an early stage in the event of maximum full-stop braking, for example. This will severely impair steerability and braking. Braking distance may increase in an emergency braking situation. ⚠ **WARNING** Risk of skidding if ESP® is malfunctioning If ESP® is malfunctioning, ESP® cannot carry out vehicle stabilisation. In addition, other driving safety systems are switched off. ▶ Drive on carefully. ▶ Have ESP® checked at a qualified specialist workshop.
 currently unavailable See Owner's Manual	* ESP®, BAS and Hill Start Assist are unavailable due to a malfunction. Self-diagnosis is not yet complete, for example. ATTENTION ASSIST is deactivated and other driving systems could be automatically deactivated. The brake system continues to function normally, but without the functions listed above. The wheels could therefore lock up at an early stage in the event of maximum full-stop braking, for example. This will severely impair steerability and braking. Braking distance may increase in an emergency braking situation.

Display messages	Possible causes/consequences and ▶ Solutions
	⚠ **WARNING** Risk of skidding if ESP® is malfunctioning If ESP® is malfunctioning, ESP® cannot carry out vehicle stabilisation. In addition, other driving safety systems are switched off. ▶ Drive on carefully. ▶ Have ESP® checked at a qualified specialist workshop. ▶ Drive carefully on a suitable stretch of road, making slight steering movements at a speed above 20 km/h. The functions mentioned above will be available again when the display message goes out. If the display message continues to be shown: ▶ Drive on carefully. ▶ Consult a qualified specialist workshop immediately.
 Release parking brake	* The red (P) indicator lamp on the instrument cluster lights up. A warning tone also sounds. You are driving with the parking brake applied or performing emergency braking using the parking brake. ▶ Release the parking brake (→ page 146).
 Parking brake See Owner's Manual	* The yellow (P) warning lamp lights up and the red (P) indicator lamp is off. The parking brake is malfunctioning, e.g. after the 12 V on-board electrical system battery has been disconnected. **Releasing the parking brake:** ▶ Switch the vehicle off and on again. ▶ Depress the brake pedal and briefly pull the handle of the parking brake (→ page 146). ▶ After around ten seconds, push down the handle of the parking brake. If the yellow (P) warning lamp is off: ▶ Release the parking brake. If the yellow (P) warning lamp remains lit: ▶ Do not drive on. ▶ Secure the vehicle against rolling away. ▶ Shift the transmission to P. ▶ Turn the front wheels towards the kerb. ▶ Consult a qualified specialist workshop. * The yellow (P) warning lamp and the red (P) indicator lamp light up. The parking brake is malfunctioning. **Releasing the parking brake:** ▶ Switch the vehicle off and on again.

Display messages	Possible causes/consequences and ▶ Solutions
	▶ Release the parking brake. If the parking brake still cannot be released: ▶ Do not drive on. ▶ Consult a qualified specialist workshop. * The red Ⓟ indicator lamp flashes and the yellow Ⓟ warning lamp lights up. The parking brake is malfunctioning. ▶ Switch the vehicle off and on again. ▶ Release or apply the parking brake. If the red Ⓟ indicator lamp continues flashing: ▶ Do not drive on. ▶ Secure the vehicle against rolling away. ▶ Shift the transmission to P. ▶ Turn the front wheels towards the kerb. ▶ Consult a qualified specialist workshop.
 Depress brake pedal to release	* The red Ⓟ indicator lamp lights up. You have tried to release the parking brake without depressing the brake pedal. ▶ Depress the brake pedal. ▶ To release, pull the handle on the parking brake.
PRE-SAFE inoperative See Owner's Manual	* Important functions of PRE-SAFE® have failed. All other occupant safety systems, e.g. airbags, remain available. ▶ Consult a qualified specialist workshop immediately. Information on these functions can be found under "PRE-SAFE® (anticipatory occupant protection)" (→ page 37).
 Restraint sys. malfunction Consult workshop	* The restraint system is malfunctioning. In addition, the warning lamp on the instrument cluster lights up. ⚠ **DANGER** Risk of fatal injuries due to restraint system malfunctions Components in the restraint system may be activated unintentionally or not deploy as planned in an accident. In the event of an accident, the high-voltage on-board electrical system may not be deactivated as intended. You may suffer an electric shock if you touch the damaged components of the high-voltage on-board electrical system. ▶ Have the restraint system checked and repaired immediately at a qualified specialist workshop. ▶ After an accident, switch off the vehicle immediately. Further information on the restraint system and its components can be found under "Occupant safety".

Display messages	Possible causes/consequences and ▶ Solutions
 Front left malfunction Consult workshop (example)	* The corresponding restraint system is malfunctioning. In addition, the warning lamp on the instrument cluster lights up. ⚠ **DANGER** Risk of fatal injuries due to restraint system malfunctions Components in the restraint system may be activated unintentionally or not deploy as planned in an accident. In the event of an accident, the high-voltage on-board electrical system may not be deactivated as intended. You may suffer an electric shock if you touch the damaged components of the high-voltage on-board electrical system. ▶ Have the restraint system checked and repaired immediately at a qualified specialist workshop. ▶ After an accident, switch off the vehicle immediately. ▶ Consult a qualified specialist workshop immediately.
 Left windowbag malfunction Consult workshop (example)	* The corresponding window airbag is malfunctioning. In addition, the warning lamp on the instrument cluster lights up. ⚠ **WARNING** Risk of injury or fatal injury due to a malfunction in the windowbag The windowbag might be triggered unintentionally or might not be triggered at all in the event of an accident. ▶ Have the windowbag checked and repaired immediately at a qualified specialist workshop. ▶ Consult a qualified specialist workshop immediately.

Driving systems

Display messages	Possible causes/consequences and ▶ Solutions
	* For certain countries only: the maximum permissible speed has been exceeded. ▶ Drive more slowly.
 ATTENTION ASSIST inoperative	* ATTENTION ASSIST has failed. ▶ Consult a qualified specialist workshop.
ATTENTION ASSIST: Take a break!	* Based on certain criteria, ATTENTION ASSIST has detected fatigue or increasing lapses in concentration on the part of the driver. A warning tone also sounds. ▶ If necessary, take a break. On long journeys, take regular and timely breaks that allow you to rest properly.

Display messages	Possible causes/consequences and ▶ Solutions
Active Distance Assist - - - km/h	* An activation condition for Active Distance Assist DISTRONIC has not been fulfilled. ▶ Comply with the activation conditions for Active Distance Assist DISTRONIC (→ page 153).
Active Distance Assist Off	* Active Distance Assist DISTRONIC has been deactivated (→ page 153). In the event of a deactivation not initiated by the driver, a warning tone also sounds.
Active Distance Assist inoperative	* A warning tone also sounds. Active Distance Assist DISTRONIC is malfunctioning. In addition, BAS may have failed. ▶ Consult a qualified specialist workshop.
Active Distance Assist and Limiter inoperative	* A warning tone also sounds. Active Distance Assist DISTRONIC and the limiter are malfunctioning. ▶ Consult a qualified specialist workshop.
Active Distance Assist suspended	* You are accelerating. Active Distance Assist DISTRONIC does not intervene for the duration of the acceleration process. ▶ Remove your foot from the accelerator pedal. Active Distance Assist DISTRONIC will be activated again.
Active Distance Assist currently unavailable See Owner's Manual	* A warning tone also sounds. Active Distance Assist DISTRONIC has been switched off and is temporarily non-operational. The following causes are possible: • The function is impaired due to heavy rain or snow. • The radar sensor system is temporarily non-operational, e.g. due to electromagnetic radiation close to TV or radio transmitting stations or other sources of radiation. • The system is outside the operating temperature range. • The on-board electrical system voltage is too low. If the causes mentioned above no longer apply, the display message will disappear and Active Distance Assist DISTRONIC will be operational again. If the display message does not disappear: ▶ Stop in accordance with the traffic conditions. ▶ Secure the vehicle against rolling away. ▶ Restart the vehicle.
Active Distance Assist available again	* Active Distance Assist DISTRONIC is operational again after being temporarily unavailable. You can now switch Active Distance Assist DISTRONIC on again (→ page 154).
Active Brake Assist Functions limited See Owner's Manual	* Active Brake Assist is unavailable due to a malfunction. ▶ Consult a qualified specialist workshop.

Display messages	Possible causes/consequences and ▶ Solutions
Active Brake Assist Functions currently limited See Owner's Manual	* Active Brake Assist is temporarily non-operational. The following causes are possible: • The sensors in the front bumper are dirty. • The function is impaired due to heavy rain or snow. • The radar sensor system is temporarily non-operational, e.g. due to electromagnetic radiation close to TV or radio transmitting stations or other sources of radiation. • The system is outside the operating temperature range. • The on-board electrical system voltage is too low. If the causes mentioned above no longer apply, the display message will disappear and Active Brake Assist will be operational again. If the display message does not disappear: ▶ Stop in accordance with the traffic conditions. ▶ Secure the vehicle against rolling away. ▶ Switch off the vehicle. ▶ Clean the sensors in the front bumper (→ page 219). ▶ Start the vehicle again.
Radar sensors dirty See Owner's Manual	* A warning tone also sounds. At least one of the following driving systems or driving safety systems is temporarily non-operational or operational only on a restricted basis: • Active Brake Assist • Blind Spot Assist • Active Distance Assist DISTRONIC • Recuperation level D AUTO The following causes are possible: • The sensors in the radiator grille and/or in the bumpers are dirty. • The function of the driving system or driving safety system is impaired due to heavy rain or snow. If the causes mentioned above no longer apply, the display message will disappear and the driving systems or driving safety systems will be operational again. If the display message does not disappear: ▶ Stop in accordance with the traffic conditions. ▶ Secure the vehicle against rolling away. ▶ Switch off the vehicle. ▶ Clean the sensors in the following places: • In the radiator grille • In the front bumper • In the rear bumper ▶ Start the vehicle again.

Display messages	Possible causes/consequences and ▶ Solutions
Limiter - - - km/h	* The limiter cannot be activated while you have the accelerator pedal depressed beyond the point of resistance (kickdown). ▶ If conditions permit, drive at a speed greater than 30 km/h and store the speed.
Limiter passive	* You have the accelerator pedal depressed beyond the point of resistance. Whilst you are accelerating, the limiter does not control your speed. ▶ Remove your foot from the accelerator pedal. The limiter will be reactivated and will limit your speed.
Cruise control - - - km/h	* An activation condition for cruise control has not been met. For example, you are aiming to store a speed below 30 km/h. ▶ If conditions permit, drive at a speed greater than 30 km/h and store the speed. ▶ Observe the activation conditions for cruise control (→ page 152).
Cruise control and Limiter inoperative	* A warning tone also sounds. Cruise control and the limiter are malfunctioning. ▶ Consult a qualified specialist workshop.
Blind Spot Assist inoperative	* Blind Spot Assist is malfunctioning. ▶ Consult a qualified specialist workshop.
Blind Spot Assist currently unavailable See Owner's Manual	* Blind Spot Assist is temporarily non-operational. The following causes are possible: • The function is impaired due to heavy rain or snow. • The radar sensor system is temporarily non-operational, e.g. due to electromagnetic radiation close to TV or radio transmitting stations or other sources of radiation. • The system is outside the operating temperature range. If the causes mentioned above no longer apply, the display message will disappear and Blind Spot Assist will be operational again. If the display message does not disappear: ▶ Stop in accordance with the traffic conditions. ▶ Secure the vehicle against rolling away. ▶ Switch off the vehicle. ▶ Restart the vehicle.
Active Parking Assist cancelled	* An acoustic signal also sounds. The active parking assistance systems have been cancelled and Active Parking Assist will automatically be aborted. You have touched the steering wheel, for example, or have driven at too high a speed. ▶ Steer and brake manually. ▶ Repeat the parking procedure if necessary. Take the deactivation conditions into account in the process (→ page 161).
Active Parking Assist inoperative	* PARKTRONIC is malfunctioning or defective.

Display messages	Possible causes/consequences and ▶ Solutions
	▶ Comply with the instructions and aids in "Function of PARKTRONIC"(→ page 157). ▶ If the display message continues to be displayed, consult a qualified specialist workshop: * Active Parking Assist is not available or is malfunctioning. ▶ Switch off the vehicle, wait a short while, then switch it on again. If the display message continues to be displayed, or if the display does not show the P symbol: ▶ Consult a qualified specialist workshop.
Lane Keeping Assist inoperative	* Lane Keeping Assist is malfunctioning. ▶ Consult a qualified specialist workshop.
Lane Keeping Assist currently unavailable See Owner's Manual	* Lane Keeping Assist has been switched off and is temporarily non-operational. The following causes are possible: • The windscreen is dirty in the camera's field of vision. • Visibility is impaired due to heavy rain, snow or fog. • Lane markings are absent for a long period of time. • The lane markings are worn, dark or covered by dirt or snow, for example. If the causes mentioned above no longer apply, the display message will disappear and Lane Keeping Assist will be operational again. If the display message does not disappear: ▶ Stop in accordance with the traffic conditions. ▶ Secure the vehicle against rolling away. ▶ Clean the windscreen.
Traffic Sign Assist inoperative	* Traffic Sign Assist is malfunctioning. ▶ Consult a qualified specialist workshop.
Traffic Sign Assist currently unavailable See Owner's Manual	* Traffic Sign Assist has been switched off and is temporarily non-operational. The following causes are possible: • The windscreen is dirty in the camera's field of vision. • Visibility is impaired due to heavy rain, snow or fog. If the causes mentioned above no longer apply, the display message will disappear and Traffic Sign Assist will be operational again. If the display message does not go out: ▶ Stop in accordance with the traffic conditions. ▶ Secure the vehicle against rolling away. ▶ Clean the windscreen.

Display messages	Possible causes/consequences and ▶ Solutions
HOLD Off	* The HOLD function has been deactivated. The vehicle has started skidding. A warning tone also sounds. ▶ Switch the HOLD function on again later (→ page 156). * The HOLD function has been deactivated. An activation condition will no longer be met when the brake pedal is depressed. A warning tone also sounds. ▶ Check the activation conditions of the HOLD function (→ page 156).
Lowering	* The vehicle level may be lowered for the following reasons: • You have selected a different drive program. • You have exceeded the speed limit.
Vehicle rising	* The vehicle level may be raised for the following reasons: • You have selected a different drive program. • You have fallen below the speed limit.
Compressor is cooling	* Due to frequent level changes within a short space of time, the compressor first needs to cool down to enable the selected driving level to be set. When the compressor has cooled down, the vehicle will continue rising to the selected vehicle level. ▶ Drive on in a manner appropriate for the current level. Make sure that there is sufficient ground clearance.
Malfunction See Owner's Manual	* AIRMATIC is functioning only to a limited extent. The vehicle's handling characteristics may be affected. ! **NOTE** The tyres on the front axle or the fenders could be damaged by large steering movements ▶ Avoid large steering movements while driving and listen for scraping sounds. ▶ If you hear scraping sounds, pull over and stop the vehicle in accordance with the traffic conditions, and set a higher vehicle level if possible. ▶ Drive in a manner appropriate for the current level, but do not exceed 80 km/h. ▶ Consult a qualified specialist workshop.

Climate control

Display messages	Possible causes/consequences and ▶ Solutions
inoperative HV battery charging incomplete	* The high-voltage battery is charging. Pre-entry climate control cannot be switched on. ▶ Wait until the charging process has achieved a minimum charge.
inoperative Charge HV battery	* The charge level of the high-voltage battery is too low. Pre-entry climate control cannot be switched on. ▶ Charge the high-voltage battery.
Pre-entry climate control (via key) available again after engine start	* You have attempted to switch on pre-entry climate control more than three times with the engine switched off. ▶ Let the drive system run for ten seconds. Pre-entry climate control is operational again.
Pre-entry climate control (via key) inoperative HV-battery low	* The charge level of the high-voltage battery is too low. Pre-entry climate control cannot be switched on. ▶ Charge the high-voltage battery. When the high-voltage battery is sufficiently charged, pre-entry climate control will be operational again.

Drive system

Display messages	Possible causes/consequences and ▶ Solutions
Maximum speed exceeded Reduce speed	* The vehicle has exceeded the maximum permissible speed. ▶ Slow the vehicle to the maximum permissible speed in accordance with the traffic conditions. You could otherwise damage the drive system.
Charger cable connected	* You cannot pull away while the charging cable is connected. ▶ Disconnect the charging cable from the vehicle.
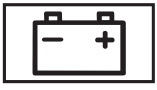 12 V battery See Owner's Manual	* The drive system is off and the charge level is too low. ▶ Switch off electrical consumers that are not required. To charge the battery: ▶ Charge the battery when stationary.

Display messages	Possible causes/consequences and ▶ Solutions
 Battery reserve level Charge high-voltage battery	* The state of charge of the high-voltage battery has reached the reserve level. ▶ Charge the high-voltage battery (→ page 136).
Without starting engine again, consult workshop	* The drive system cannot be restarted due to a malfunction. ▶ Do not switch off the vehicle; drive on to the nearest qualified specialist workshop.
Vehicle not currently being charged Charging station fault	* A malfunction has occurred in the charging station or the RFID card is not recognised. ▶ Start the charging process at a different charging station. or ▶ Have the RFID card checked to ensure it is working properly.
Charging method currently unavailable Please try again or change charg. method	* A temporary malfunction has occurred in the charging station. ▶ Wait until the malfunction has passed. or ▶ Start the charging process at a different charging station.
Charging malfunction Please change charging type See Owner's Manual	* The charging process cannot be started due to a malfunction. ▶ Consult a qualified specialist workshop.
Not possible to unlock charging cable See Owner's Manual	* The charging cable connector cannot be removed from the charging station's socket. ▶ Press the EMERGENCY OFF switch on the charging station. If the charging cable connector cannot be removed after that: ▶ Request service personnel from the operator of the charging station via the emergency call button attached to the charging station or the emergency call numbers.
 Towing not permitted See Owner's Manual	* The drive system is malfunctioning. ▶ Have the vehicle transported only using a transporter or trailer.
  Acoustic presence indicator inoperative	* The sound generator (acoustic vehicle alerting system) is malfunctioning. No driving noises are being produced. As a result, your vehicle may not be heard by other road users in certain situations. ▶ Drive with particular care. ▶ Consult a qualified specialist workshop.
Reduced drive system performance See Owner's Manual	* The drive system is outside the operating temperature range, e.g. due to extreme outside temperatures. Drive system power output is reduced. The yellow reduced power warning lamp is lit.

Display messages	Possible causes/consequences and ▶ Solutions
	▶ Drive on carefully. Once the operating conditions return to normal, the full output will be available again. * The high-voltage battery is not charged sufficiently. Drive system power output is reduced. The yellow reduced power warning lamp is lit. ▶ Drive on carefully. ▶ Charge the high-voltage battery immediately. * If the drive system power output is still reduced, there is a fault in the drive system. ▶ Drive on carefully. ▶ Consult a qualified specialist workshop.
Battery capacity too low. Stop charge immediately	* The charge level of the high-voltage battery is so low that driving is no longer possible. ▶ Park the vehicle and charge the high-voltage battery.
HV battery overheated Stop, everybody out! Outside if possible	* The high-voltage battery has overheated. There is a risk of fire. ▶ Stop the vehicle immediately in accordance with the traffic conditions. ▶ If possible, park the vehicle in the outdoors and make sure that all occupants exit the vehicle. ▶ Do not drive on. ▶ If smoke develops, leave the danger zone and call the fire service immediately. ▶ Consult a qualified specialist workshop even if there are no external signs of a fire.
Malfunction	* The drive system is malfunctioning. A warning tone also sounds. ▶ Consult a qualified specialist workshop. * There is a serious malfunction if the display message and warning tone are repeated at short intervals. You must stop the vehicle immediately in accordance with the traffic conditions because the drive system is automatically deactivated. ▶ Stop the vehicle immediately in accordance with the traffic conditions. ▶ Switch off the vehicle and consult a qualified specialist workshop.
High-voltage battery overheated. Stop now, outside if possible.	* The high-voltage battery has overheated. There is a risk of fire. ▶ Stop the vehicle immediately in accordance with the traffic conditions. ▶ If possible, park the vehicle in the outdoors and make sure that all occupants exit the vehicle. ▶ Do not drive on. ▶ If smoke develops, leave the danger zone and call the fire service immediately.

Display messages	Possible causes/consequences and ▶ Solutions
	▶ Consult a qualified specialist workshop even if there are no external signs of a fire.
Störung Werkstatt aufsuchen	* The drive system is malfunctioning. ▶ Consult a qualified specialist workshop.
Stop Engine off	* The drive system is malfunctioning. ▶ Stop the vehicle immediately in accordance with the traffic conditions. Do not continue driving! ▶ Consult a qualified specialist workshop.
Störung Werkstatt aufsuchen	* The drive system is malfunctioning. ▶ Consult a qualified specialist workshop.
High-voltage battery maintenance required urgently. No start in approx. XXX km	* The high-voltage battery requires maintenance (→ page 213). Otherwise, it will no longer be possible to restart the vehicle after the remaining distance displayed has been covered. ▶ Have the necessary maintenance work on the high-voltage battery carried out at a qualified specialist workshop.
High-voltage battery maintenance required urgently. Do not restart and consult dealer.	* The high-voltage battery requires maintenance (→ page 213). Otherwise, you will generally not be able to restart the vehicle once you switch it off. ▶ Do not switch off the vehicle; drive on to the nearest qualified specialist workshop.

Tyres

Display messages	Possible causes/consequences and ▶ Solutions
Rectify tyre pressure	* The tyre pressure is too low in at least one of the tyres, or the difference in tyre pressure between the individual wheels is too great. ▶ Check the tyre pressure at the next opportunity (→ page 236). ▶ Correct the tyre pressure as necessary. ▶ Restart the tyre pressure monitoring system (→ page 237).
Check tyre(s)	* A warning tone also sounds. The tyre pressure in one or more tyres has dropped significantly.

Display messages	Possible causes/consequences and ▶ Solutions
	⚠ **WARNING** Risk of an accident due to insufficient tyre pressure • The tyres can burst. • The tyres can wear excessively and/or unevenly. • The driving characteristics as well as the steering and braking may be greatly impaired. You could then lose control of the vehicle. ▶ Observe the recommended tyre pressures. ▶ Adjust the tyre pressure if necessary. ▶ Stop the vehicle without steering or braking suddenly. Pay attention to the traffic conditions. ▶ Secure the vehicle against rolling away. ▶ Check the tyres. If necessary, replace the wheel (→ page 239). ▶ Check the tyre pressure (→ page 236). Correct the tyre pressure as necessary.
Warning tyre defect	* The tyre pressure in one or more tyres has dropped suddenly. ⚠ **WARNING** Risk of an accident from driving with a flat tyre • The tyres can overheat and cause a fire. • The driving characteristics as well as the steering and braking may be greatly impaired. You could then lose control of the vehicle. ▶ Do not drive on with a flat tyre. ▶ Observe the notes on flat tyres. ▶ Stop the vehicle without steering or braking suddenly. Pay attention to the traffic conditions. ▶ Secure the vehicle against rolling away. ▶ Check the tyres. If necessary, replace the wheel (→ page 239).
	* Due to a source of radio interference, no signals from the tyre pressure sensors are being received. The tyre pressure monitoring system is temporarily malfunctioning. The tyre pressure monitoring system will restart automatically as soon as the cause has been rectified.
Wheel sensor(s) missing	* There is no signal from the tyre pressure sensor of at least one tyre. The display is not showing any pressure value for the tyre in question. ▶ Have the faulty tyre pressure sensor replaced at a qualified specialist workshop.
Tyre pressure monitor inoperative No wheel sensors	* The wheels fitted do not have suitable tyre pressure sensors. The tyre pressure monitoring system is deactivated. ▶ Fit wheels with suitable tyre pressure sensors. The tyre pressure monitoring system will switch on after a few minutes of driving.

Display messages	Possible causes/consequences and ▶ Solutions
Tyre pressure monitor inoperative	* The tyre pressure monitoring system is malfunctioning. ▶ Consult a qualified specialist workshop.

Key

Display messages	Possible causes/consequences and ▶ Solutions
 Replace key	* The key needs to be replaced. ▶ Consult a qualified specialist workshop.

Vehicle

Display messages	Possible causes/consequences and ▶ Solutions
	* The tailgate is open. ▶ Close the tailgate.
	* A warning tone also sounds. The bonnet is open. ⚠ **WARNING** Risk of accident due to driving with the bonnet unlocked The bonnet may open and block your view. ▶ Never release the bonnet when driving. ▶ Before every trip, ensure that the engine bonnet is locked. ▶ Stop the vehicle immediately in accordance with the traffic conditions. ▶ Secure the vehicle against rolling away. ▶ Close the bonnet.
	* In addition, a warning tone sounds while the vehicle is in motion. The display shows the open door or doors. ▶ Close all the doors.
 Top up washer fluid	* The washer fluid level in the washer fluid reservoir has dropped below the minimum. ▶ Top up the washer fluid (→ page 216).
 Power steering malfunction See Owner's Manual	* A warning tone also sounds. The power assistance for the steering could be malfunctioning. You may need to steer more forcefully. ▶ Carefully continue to a qualified specialist workshop and have the steering checked immediately.

Display messages	Possible causes/consequences and ▶ Solutions
Telephone No service	* Your vehicle is outside the transmission and receiver range of the mobile phone network provider.
To start engine, shift to either P or N	* You have attempted to start the vehicle in transmission position R or D. ▶ Shift the transmission to position P or N.
Auxiliary battery malfunction	* The auxiliary battery for the transmission is no longer being charged. ▶ Consult a qualified specialist workshop.
Apply brake to deselect Park (P) position	* You have tried to shift the transmission to position D, R or N without applying the brake. ▶ Depress the brake pedal.
Apply brake to select R	* You have tried to shift the transmission to position R without applying the brake. ▶ Depress the brake pedal. ▶ Shift the transmission to position R.
N permanently active Risk of vehicle rolling	* A warning tone also sounds. While the vehicle is rolling or driving, the transmission was shifted to position N. ▶ To stop, depress the brake pedal and, when the vehicle is at a standstill, shift the transmission to position P. ▶ To continue your journey, shift the transmission to position R or D.
Risk of vehicle rolling Vehicle not in P	* A warning tone also sounds. The driver's door is open and the transmission is in position N, R or D. ▶ Shift the transmission to position P . ▶ Secure the vehicle against rolling away.
Without changing gear, consult workshop	* A warning tone also sounds. You can no longer change the transmission position due to a malfunction. If transmission position D has been selected: ▶ Without changing the transmission position, consult a qualified specialist workshop. If transmission position P, R or N has been selected: ▶ Inform a qualified specialist workshop.
Reversing not poss. Consult workshop	* The transmission is malfunctioning. Transmission position R cannot be selected. ▶ Inform a qualified specialist workshop.
Transmission Malfunction Stop	* The transmission is malfunctioning. The transmission automatically switches to neutral N. ▶ Stop the vehicle immediately in accordance with the traffic conditions. ▶ Shift the transmission to position P . ▶ Inform a qualified specialist workshop.

Lights

Display messages	Possible causes/consequences and ▶ Solutions
Left dipped beam (example)	* The corresponding light source is defective. Have defective LED lights replaced at a qualified specialist workshop. ▶ Observe the notes on changing a bulb (→ page 108). ▶ Replace the defective bulb at the front (→ page 109) or rear (→ page 110).
Adaptive Main-beam Assist inoperative	* Adaptive Highbeam Assist is malfunctioning. ▶ Switch high beam on/off manually. ▶ Consult a qualified specialist workshop.
Adaptive Main-beam Assist currently unavailable See Owner's Manual	* Adaptive Highbeam Assist is deactivated and temporarily inoperative. The following causes are possible: • The windscreen is dirty in the camera's field of vision. • Visibility is impaired due to heavy rain, snow or fog. ▶ Clean the windscreen. When the system detects that the camera is fully operational, the display will show the message Adaptive Main-beam Assist available again Adaptive Highbeam Assist is operational again.
Active Light System inoperative	* The active light function is faulty. ▶ Consult a qualified specialist workshop.
AUTO lights inoperative	* The light sensor is faulty. The automatic driving lights are malfunctioning. ▶ Switch the light functions on/off manually (→ page 102). ▶ Consult a qualified specialist workshop.
Intell. Light System inoperative	* The Intelligent Light System is malfunctioning. The lighting system remains available without the Intelligent Light System functions. ▶ Consult a qualified specialist workshop.
Malfunction See Owner's Manual	* The exterior lighting is malfunctioning. ▶ Consult a qualified specialist workshop.

Warning and indicator lamps

Indicator and warning lamps on the instrument cluster

Some systems will perform a self-test when the vehicle is switched on. Some indicator and warning lamps may briefly light up or flash. This behaviour is non-critical. These indicator and warning lamps indicate a malfunction only if they light up or flash after the vehicle has been started or during a journey.

Safety systems

Warning/indicator lamp	Possible causes/consequences and ▶ Solutions
 Restraint system warning lamp	*The red restraint system warning lamp is on while the vehicle is on. The restraint system is malfunctioning. ⚠ **DANGER** Risk of fatal injuries due to restraint system malfunctions Components in the restraint system may be activated unintentionally or not deploy as planned in an accident. In the event of an accident, the high-voltage on-board electrical system may not be deactivated as intended. You may suffer an electric shock if you touch the damaged components of the high-voltage on-board electrical system. ▶ Have the restraint system checked and repaired immediately at a qualified specialist workshop. ▶ After an accident, switch off the vehicle immediately. ▶ Pay attention to the display messages. ▶ Drive on carefully. ▶ Have the restraint system and its components checked immediately at a qualified specialist workshop. Further information on the restraint system and its components can be found under "Occupant safety".
 Brake system warning lamp	*The red brake system warning lamp is on while the vehicle is on. EBD is unavailable due to a malfunction. This means that ABS, BAS, Hill Start Assist and ESP® as well as its driving safety systems, for example, are also unavailable. ATTENTION ASSIST is deactivated and other driving systems could be automatically deactivated. ⚠ **WARNING** Risk of skidding if EBD, ABS and ESP® are malfunctioning The wheels may block during braking and ESP® does not perform any vehicle stabilization. The steerability and braking characteristics are heavily impaired and the braking distance may increase. In addition, other driving safety systems are switched off. ▶ Drive on carefully. ▶ Have the brake system checked immediately at a qualified specialist workshop. ▶ Switch off the vehicle, wait a short while, then switch it on again. ▶ Check whether the display message has disappeared and ESP® is operational. If the display message continues to be shown: ▶ Drive on carefully. ▶ Consult a qualified specialist workshop immediately.

Warning/indicator lamp	Possible causes/consequences and ▶ Solutions
 Brake system warning lamp	*The red brake system warning lamp is on while the vehicle is on. A warning tone also sounds. The brake force boosting is malfunctioning. ⚠ **WARNING** Risk of accident and injury if brake force boosting is malfunctioning If brake force boosting is malfunctioning, increased brake pedal force may be necessary for braking. The braking characteristics may be impaired. The braking distance can increase in emergency braking situations. ▶ Stop in a safe location immediately. Do not continue driving! ▶ Consult a qualified specialist workshop. ▶ Secure the vehicle against rolling away.
 Brake system warning lamp	*The red brake system warning lamp is on while the vehicle is on. There is insufficient brake fluid in the brake fluid reservoir. ⚠ **WARNING** Risk of an accident due to low brake fluid level If the brake fluid level is too low, the braking effect and the braking characteristics may be impaired. ▶ Stop the vehicle as soon as possible, paying attention to road and traffic conditions. Do not continue driving. ▶ Consult a qualified specialist workshop. ▶ Do not top up the brake fluid. ▶ Secure the vehicle against rolling away.
 ABS warning lamp	*The yellow ABS warning lamp is on while the vehicle is on. ABS has been switched off due to a malfunction. As a result, BAS, Hill Start Assist and ESP® as well as its driving safety systems, for example, have also been switched off. ATTENTION ASSIST is deactivated and other driving systems could be automatically deactivated. ⚠ **WARNING** Risk of skidding if ABS and ESP® are malfunctioning The wheels may block during braking and ESP® does not perform any vehicle stabilization. The steerability and braking characteristics are heavily impaired and the braking distance may increase. In addition, other driving safety systems are switched off. ▶ Drive on carefully. ▶ Have ABS and ESP® checked immediately at a qualified specialist workshop. ▶ Switch off the vehicle, wait a short while, then switch it on again. ▶ Check whether the display message has disappeared and ESP® is operational. If the display message continues to be shown:

Warning/indicator lamp	Possible causes/consequences and ▶ Solutions
	▶ Drive on carefully. ▶ Consult a qualified specialist workshop immediately. If the ABS control unit is defective, other systems may be available only with restrictions or may be unavailable, e.g. the navigation system or the automatic transmission.
 ESP® warning lamp	*The yellow ESP® warning lamp flashes while the vehicle is in motion. ESP® or traction control intervenes because there is a risk of skidding or at least one wheel is spinning. Cruise control or Active Distance Assist DISTRONIC has been automatically switched off. ▶ When pulling away, accelerate only as much as is necessary. ▶ Depress the accelerator pedal less during your journey. ▶ Adapt your driving style to suit the road and weather conditions. ▶ Do not switch off ESP®. In exceptional cases, it may be better to switch off ESP®(→ page 148).
 ESP® warning lamp	*The yellow ESP® warning lamp is on while the vehicle is on. ESP®, BAS and Hill Start Assist are unavailable due to a malfunction. ATTENTION ASSIST is deactivated and other driving systems could be automatically deactivated. ⚠ **WARNING** Risk of skidding if ESP® is malfunctioning If ESP® is malfunctioning, ESP® cannot carry out vehicle stabilisation. In addition, other driving safety systems are switched off. ▶ Drive on carefully. ▶ Have ESP® checked at a qualified specialist workshop. ▶ Pay attention to the display messages. ▶ Drive on carefully. ▶ Consult a qualified specialist workshop immediately.
  ESP® OFF warning lamp	*The yellow ESP® OFF warning lamp is on while the vehicle is on. ESP® has been switched off. ⚠ **WARNING** Risk of skidding when driving with ESP® deactivated ESP® does not act to stabilise the vehicle. The availability of further driving safety systems is also limited. ▶ Drive on carefully. ▶ Deactivate ESP® only for as long as the situation requires. If ESP® cannot be activated, ESP® is malfunctioning. ▶ Have ESP® checked immediately at a qualified specialist workshop. ▶ Switch ESP® on again.

Warning/indicator lamp	Possible causes/consequences and ▶ Solutions
	In exceptional cases, it may be better to switch off ESP®(→ page 148). ▶ Adapt your driving style to suit the road and weather conditions. If ESP® cannot be switched on: ▶ Drive on carefully. ▶ Have ESP® checked at a qualified specialist workshop.
Indicator lamp for parking brake	*The red indicator lamp for the parking brake flashes or is on and/or the yellow warning lamp for the parking brake is on. The parking brake is malfunctioning or the display shows an instruction to release the parking brake. If only the red indicator lamp for the parking brake lights up, the parking brake has been applied. Pay attention to the display messages.

Seat belt

Warning/indicator lamp	Possible causes/consequences and ▶ Solutions
Seat belt warning lamp	*The red seat belt warning lamp lights up or flashes after the vehicle has started. A warning tone may also sound. For certain countries only: The red seat belt warning lamp lights up for a maximum of six seconds after the vehicle has been switched on. The seat belt warning lamp reminds the driver and front passenger to fasten their seat belts. ▶ Fasten your seat belt (→ page 31).
Seat belt warning lamp	*The red seat belt warning lamp lights up after the vehicle starts as soon as the driver's or front passenger door has been closed. The driver's or front passenger's seat belt is not fastened. ▶ Fasten your seat belt (→ page 31). The warning lamp will go out. In vehicles with automatic front passenger airbag actuation, there are objects on the front passenger seat. ▶ Take the objects off the front passenger seat and stow them in a well-secured place. The warning lamp will go out.
Seat belt warning lamp	*The red seat belt warning lamp flashes and an intermittent warning tone sounds. The driver's or front passenger's seat belt is not fastened. You are driving at a speed greater than 25 km/h or have briefly exceeded 25 km/h. ▶ Fasten your seat belt (→ page 31). The warning lamp and the intermittent warning tone will go out. In vehicles with automatic front passenger airbag actuation, there are objects on the front passenger seat. You are driving at a speed greater than 25 km/h or have briefly exceeded 25 km/h. ▶ Take the objects off the front passenger seat and stow them in a well-secured place. The warning lamp and the intermittent warning tone will go out.

Driving systems

Warning/indicator lamp	Possible causes/consequences and ▶ Solutions
Warning lamp for distance warning function	*The red distance warning lamp lights up while the vehicle is in motion. The distance to the vehicle in front is too small for the selected speed. ▶ Increase the distance to the vehicle in front.
Warning lamp for distance warning function	*The red distance warning lamp lights up while the vehicle is in motion. A warning tone also sounds. You are approaching a vehicle or a stationary obstacle on your anticipated route at excessive speed. ▶ Be ready to apply the brakes immediately. ▶ Pay careful attention to the traffic situation. If necessary, apply the brakes or avoid an obstacle. You can find further information about the distance warning function in "Active Brake Assist" (→ page 149).

Vehicle

Warning/indicator lamp	Possible causes/consequences and ▶ Solutions
Power steering system warning lamp	*The red power steering warning lamp is on while the vehicle is on. A warning tone also sounds. The power assistance for the steering could be malfunctioning. You may need to steer more forcefully. ▶ Carefully continue to a qualified specialist workshop and have the steering checked immediately.

Drive system

Warning/indicator lamp	Possible causes/consequences and ▶ Solutions
Electrical fault warning lamp	* The red electrical fault warning lamp is lit. There is a fault with the electrics. ▶ Note the messages on the instrument cluster display.
High-voltage battery reserve	*The yellow warning lamp for the charge level of the high-voltage battery is lit. The charge level of the high-voltage battery has reached the reserve level. ▶ Charge the high-voltage battery.
Reduced power warning lamp	* The yellow reduced power warning lamp is lit. Drive system power output is reduced. ▶ Note the messages on the instrument cluster display.

Warning/indicator lamp	Possible causes/consequences and ▶ Solutions
High-voltage battery warning	*The red warning lamp lights up while the drive system is on. There is a malfunction in the drive system. or The high-voltage battery's state of charge is too low. ▶ Note the messages on the instrument cluster display.

Tyres

Warning/indicator lamp	Possible causes/consequences and ▶ Solutions
Tyre pressure monitoring system warning lamp	*The yellow tyre pressure monitoring system warning lamp (pressure loss/defect) is lit. The tyre pressure monitoring system has detected a loss of tyre pressure in at least one tyre. ⚠ **WARNING** Risk of an accident due to insufficient tyre pressure • The tyres can burst. • The tyres can wear excessively and/or unevenly. • The driving characteristics as well as the steering and braking may be greatly impaired. You could then lose control of the vehicle. ▶ Observe the recommended tyre pressures. ▶ Adjust the tyre pressure if necessary. ▶ Stop the vehicle without steering or braking suddenly. Pay attention to the traffic conditions. ▶ Secure the vehicle against rolling away. ▶ Pay attention to the display messages. ▶ Check the tyres and, if necessary, replace the wheel (→ page 239). ▶ Check the tyre pressure. You can check the tyre pressure electronically (→ page 236). ▶ Correct the tyre pressure if necessary.
Tyre pressure monitoring system warning lamp	*The yellow tyre pressure monitoring system warning lamp (pressure loss/malfunction) flashes for approximately one minute and then remains lit. The tyre pressure monitoring system is malfunctioning. ⚠ **WARNING** There is a risk of an accident if the tyre pressure monitoring system is malfunctioning The tyre pressure monitoring system cannot issue a warning if there is pressure loss in one or more of the tyres. Tyres with insufficient tyre pressure may impair the driving characteristics as well as steering and braking. ▶ Have the tyre pressure monitoring system checked at a qualified specialist workshop.

Warning/indicator lamp	Possible causes/consequences and ▶ Solutions
	▶ Pay attention to the display messages. ▶ Consult a qualified specialist workshop.

1, 2, 3 ...

360° Camera
- Button ... 161
- Function ... 159
- Maintenance ... 219
- Opening the camera cover (reversing camera) ... 159
- Switching automatic mode on/off (reversing camera) ... 161

A

A/C function ... 120

ABS ... 148

Accident and Breakdown Management
- Mercedes me connect ... 182

Accident, emergency call ... 223

Acoustic presence indicator ... 127

Activating/deactivating the acoustic locking verification signal ... 50

Active Brake Assist
- Function ... 149
- Switching on/off ... 151

Active Distance Assist DISTRONIC
- Activate/deactivate variable limiter ... 154
- Activating/deactivating ... 154
- Calling up a speed ... 154
- Function ... 153
- Increases/decreases the speed ... 154
- Instrument cluster display ... 156
- Storing a speed ... 154

Active light function ... 104

Active Parking Assist
- Exiting a parking space ... 163
- Function ... 161
- Parking ... 163

Adaptive brake lights ... 151

Adaptive Highbeam Assist
- Function ... 105
- Switching on/off ... 106

Adaptive Highbeam Assist Plus
- Function ... 106
- Switching on/off ... 107

Add-on equipment (body/equipment mounting directives) ... 17

Adjusting the air vents ... 123

Adjusting the armrest ... 74

Adjusting the lights (driving abroad) ... 102

After-sales service ... 213

Air suspension ... 135

Air-recirculation button
- Convenience opening/closing ... 123

Air-recirculation mode ... 122

Airbag
- Automatic co-driver airbag shutoff ... 34
- Inflating ... 29
- Overview ... 32
- PASSENGER AIR BAG indicator lamp ... 35
- Protection impaired ... 33
- Protection provided ... 32
- Warning lamp ... 28

AIRMATIC ... 135

Alarm system ... 66

Alternative route ... 194

Ambient lighting ... 108

Animals ... 49

Anti-lock braking system ... 148

Anti-skid chain ... 234

Anti-theft alarm system
- Activating/deactivating ... 66
- Activating/deactivating interior protection ... 67
- Function ... 66
- Interior motion sensor ... 67
- Stopping the alarm ... 66
- Switching tow-away protection on/off ... 67
- Tow-away protection ... 67

Anti-theft protection
- Immobiliser ... 66

Apps, Mercedes me ... 183

Aquaplaning ... 131

Armrest
- Stowage compartment ... 93

Ashtray
- in the centre console ... 98
- In the rear ... 98

Assistance system ... 148

Assistant display (on-board computer) ... 173

ASSYST PLUS
- Regular maintenance work ... 213
- Service interval display ... 213
- Special service requirements ... 214

ASSYST PLUS service interval display
- Displaying the service due date ... 213
- Non-operational times with the battery disconnected ... 214

Attachments ... 17

ATTENTION ASSIST
- Function ... 164

Switching on/off..... 165
Attention assistant..... 164
Authorised workshop..... 22
Automatic climate control..... 121
Automatic co-driver airbag shutoff
Function..... 34
PASSENGER AIR BAG indicator lamp..... 35
Automatic distance control..... 153
Automatic driving lights..... 102
Automatic emergency call..... 223
Automatic measures after an accident..... 37
Auxiliary climate control
Notes..... 124
Available power display..... 172
Axle load..... 248

B

Back support, Lumbar support..... 73
BAS..... 148
Battery
High-voltage battery..... 226
Key..... 51
On-board electrical system battery (12 V)..... 225
Belt..... 29
Blind Spot Assist
Function..... 166
Rear Cross Traffic Alert..... 167
Switching on/off..... 166
Bluetooth®
Connecting a mobile phone..... 198
Bottle holder..... 97
Brake
ABS (anti-lock braking system)..... 148
Activating/deactivating the HOLD function..... 156
Active Brake Assist..... 149
Adaptive brake lights..... 151
BAS (Brake Assist System)..... 148
Braking with parking brake..... 131
Downhill gradient..... 131
Driving instructions..... 131
EBD (Electronic Brakeforce Distribution)..... 149
Heavy/light loads..... 131
HOLD function..... 156
Limited braking effect (salt-treated roads)..... 131
New brake disks/brake linings..... 131
new brake linings/brake disks..... 130
Running-in notes..... 130
Wet road surfaces..... 131
Brake Assist System..... 148
Brake fluid..... 249
Brakeforce Distribution..... 149
Brakes
Recuperation..... 128
Braking assistance..... 148
Breakdown
Changing a wheel..... 239
Towing (both axles on the ground)..... 229
Towing (raised front axle)..... 229
Transporting the vehicle..... 230
Vehicle does not start..... 231
Bulbs..... 108
Buttons on the steering wheel..... 8

C

Cameras
360° Camera..... 159
Information..... 147
Maintenance..... 219
Reversing camera..... 158
Car key..... 50
Car wash (care)..... 217
Car-to-X-Communication
Display on map..... 195
Care, Car wash
Automatic car wash..... 217
High-pressure cleaner..... 217
Washing by hand..... 218
Carpet
Cleaning..... 220
Carrier systems
Notes..... 211
Central locking system
Button..... 53
Centre console
Overview (between the seats)..... 12
Overview (centre)..... 10
Overview (lower)..... 11
Overview (top)..... 9
Stowage compartment..... 93
Changing a wheel
Lowering the vehicle..... 241
Preparing..... 239
Raising the vehicle..... 240
Removing a wheel..... 241

Charge level display..... 171

Charging
Charge port, emergency release..... 144
Charging station, mode 3..... 140
Ending the charging process..... 144
Fast charging station, mode 3/4..... 141
Indicator lamps on vehicle socket..... 139
Mains socket, mode 2..... 139
Notes on charging the high-voltage battery..... 136
Notes on the high-voltage battery..... 226
On-board electrical system battery (12 V)..... 227
Setting the charging process..... 138
Setting the departure time..... 138
Setting the maximum charge level..... 138
Setting the maximum charging current..... 138
Starting the charging process..... 142
Stowing the charging cable..... 137
USB port..... 100
Vehicle socket..... 139
Wallbox, mode 3..... 140

Charging cable
Stowing..... 137

Charging prediction..... 138

Child safety lock
Hinged windows..... 49
Sliding door..... 48

Child seat
Approval categories..... 41
Basic instructions..... 37
Fitting ISOFIX..... 43
Front passenger seat..... 47
Recommendations for child restraint systems..... 40
Risks/dangers..... 38
Seats suitable for belt-secured child restraint systems..... 45
Seats suitable for ISOFIX child restraint systems..... 42
Securing..... 41
Securing to the front passenger seat with the seat belt..... 47
Securing to the rear seat with the seatbelt..... 46
Top Tether..... 44
Without automatic co-driver airbag shutoff..... 47

Children
Avoiding dangers in the vehicle..... 38
Basic instructions..... 37

Cigarette lighter..... 98

Clean varnish..... 218

Cleaning
High-pressure cleaner..... 217
Paint..... 218
Vehicle interior..... 220
Washing by hand..... 218

Climate control
A/C function..... 120
Activating/deactivating..... 120
Adjusting the air vents..... 123
Air distribution settings..... 121
Air-recirculation mode..... 122
Automatic control..... 121
Auxiliary climate control..... 124
Demisting the windscreen..... 122
Demisting windows..... 122
Energy-saving use..... 119
Notes..... 119
Setting the air distribution..... 121
Setting the airflow..... 121
Setting the temperature..... 121
Switching the rear window heater on/off..... 123
Synchronisation function..... 121
TEMPMATIC operating unit..... 118
THERMOTRONIC control panel..... 119

Co-driver airbag shutoff, PASSENGER AIR BAG OFF..... 34

Co-driver seat
Adjusting electrically..... 71

COC papers, CERTIFICATE OF CONFORMITY..... 245

Cockpit..... 6

Coffee cup symbol..... 164

Combination switch
Lights..... 103
Rear window wiper..... 113
Windscreen wipers..... 113

Commuter route..... 194

Components subject to radio regulations
Declaration of conformity..... 19

Convenience closing
via air recirculation button..... 123

Convenience opening
via air recirculation button..... 123

Coolant
Checking..... 215
Notes on coolant (drive system)..... 250
Topping up..... 215

Copyright..... 27

Cornering light..... 104
Correct use..... 23
Cross traffic (warning)..... 167
Crosswind Assist..... 149
Cruise control
Activating/deactivating..... 152
Calling up a speed..... 152
Function..... 151
Increasing/decreasing speed..... 152
Lever..... 152
Requirements:..... 152
selecting..... 152
Setting the speed..... 152
Storing a speed..... 152
Cup holder
Opening on the luxury seat..... 97
Cup holders
Centre console..... 11
Rear..... 97

D

Dashboard..... 6
Data processing in the vehicle..... 24
Data protection rights..... 26
Data storage
Data protection rights..... 26
electronic control units..... 24
Onboard Logic Unit..... 26
Online services..... 26
Daytime running lights, Constant head-lamp mode
Activating/deactivating..... 102
Replacing light bulbs..... 109
Dealership..... 22
Declaration of conformity
Components subject to radio regulations..... 19
Electromagnetic compatibility..... 19
Jack..... 20
Departure time
Auxiliary climate control..... 124
Destination entry..... 193
Diagnostics connection..... 22
Dialling a phone number (on-board computer)..... 177
Digital inside rear-view mirror..... 116
Digital Owner's Manual..... 15
DIRECT SELECT lever
Engaging drive position..... 134
Engaging neutral..... 134
Engaging park position automatically... 134
Engaging reverse gear..... 134
Function..... 133
Selecting park position..... 134
Transmission position display..... 133
Transmission positions..... 133
Disconnect device (high-voltage on-board electrical system)..... 127
Display
Cleaning..... 220
Displays on the instrument cluster..... 171
Display message, Message (instrument cluster)
Calling up on the on-board computer.. 254
Notes..... 254
Displaying the range..... 173
Distance control..... 153
Distance warning..... 149
DISTRONIC..... 153
Door
Activating/deactivating the automatic locking mechanism..... 54
Ambient lamp..... 111
Locking/unlocking emergency key..... 54
Opening (from the inside)..... 52
Unlocking (from the inside)..... 52
Door control panel..... 14
Drinks holder..... 97
Drive program display..... 135
Drive programs..... 134
Drive system
Manually disconnecting..... 127
Parking..... 145
Starting..... 129
Driver profile..... 188
Driver's seat
Adjusting electrically..... 71
Manually adjusting..... 69
Driving in winter..... 132
Driving instructions
Acoustic presence indicator (sound generator)..... 127
Brakes..... 131
Downhill gradient..... 131
Driving in winter..... 132
Electric mode..... 127
General driving tips..... 130
Light adjustment when driving abroad..... 102

Limited braking effect (salt-treated roads)..... 131
New brake disks/brake linings..... 131
Parking brake..... 131
Running-in notes..... 130
slippery road surfaces..... 132
Subjecting brakes to a load..... 131
Wet road surfaces (brake)..... 131

Driving notes
Transport by rail..... 130

Driving safety system
ABS (anti-lock braking system)..... 148
Active Brake Assist..... 149
Adaptive brake lights..... 151
ATTENTION ASSIST..... 164
BAS (Brake Assist System)..... 148
Blind Spot Assist..... 166
Cameras..... 147
Cruise control..... 151
EBD (Electronic Brakeforce Distribution)..... 149
ESP® (Electronic Stability Program)..... 148
ESP® Crosswind Assist..... 149
Hill Start Assist..... 156
HOLD function..... 156
Overview..... 148
Radar and ultrasonic sensors..... 147
Traffic Sign Assist..... 165
Your responsibility..... 147

Driving system..... 148

Driving tips
Aquaplaning..... 131
Driving on flooded roads..... 131
Driving on wet roads..... 131
Recuperation..... 128

Drowsiness detection..... 164

Dynamic handling control system..... 148

DYNAMIC SELECT
Drive program display..... 135
Drive programs..... 134
Function..... 134
Operating..... 135
Selecting the drive program..... 135

E

EASY-ENTRY easy entry and exit feature
Installing/removing (rear bench seat).... 78
Using (luxury rear seat)..... 85
Using (rear bench seat)..... 78
Using (rear seat)..... 81

EASY-PACK tailgate
Limiting the opening angle..... 60
Notes..... 59
Opening/closing..... 59
Opening/closing the rear window..... 60
Programming the key button..... 61
Resetting..... 60

EBD, Electronic Brakeforce Distribution..... 149

EC general operating permit number..... 248

ECO display
Activating..... 133
Function..... 132

Electric Intelligence
Route with charging stations..... 194

Electric mode
Notes..... 127
Power display..... 169

Electric parking brake
Automatically applying..... 146
Emergency braking..... 146
Manually applying/releasing..... 146
Notes..... 145
Releasing automatically..... 146

Electric sliding door
Function..... 55
open/close with key button..... 57
Opening/closing (from the inside)..... 56
opening/closing (from the outside)..... 57
Problems..... 58
Programming the key button..... 57
Resetting..... 58

Electromagnetic compatibility
Declaration of conformity..... 19

Electronic Stability Program..... 148

Electronics
Engine electronics..... 245
Fitting two-way radios..... 245

Emergency
Fire extinguisher..... 222
First-aid kit (soft-sided)..... 222
Removing the warning triangle..... 222
Safety vest..... 222
Setting up the warning triangle..... 222

Emergency braking
Electric parking brake..... 146

Emergency key
Locking/unlocking the door..... 54
Removing/inserting..... 51

Emergency release (vehicle socket)..... 144

Emergency shutoff (high-voltage on-board electrical system)..... 127

Energy consumption (displaying the average)..... 173
Energy flow display
Displaying..... 132
Function/notes..... 132
Engaging drive position (transmission)..... 134
Engaging reverse gear..... 134
Engine electronics..... 245
Engine number..... 248
Environmental protection
Take-back of end-of-life vehicles..... 16
Environmentally friendly driving..... 16
ESC, Electronic Stability Control..... 148
ESP®
Activating/deactivating..... 149
Crosswind Assist..... 149
Function..... 148
Exiting a parking space
PARKTRONIC..... 157
Exterior lighting
Changing illuminants (rear)..... 110
Intelligent Light System..... 104
Light switch..... 102
Maintenance..... 219
Replacing illuminants (front)..... 109

F

Factory settings
MBUX reset function..... 190
Fastening..... 31
Fault message
Notes on display messages..... 254
Filling up the windscreen washing system..... 216
Fire extinguisher..... 222
First aid
First-aid kit (soft-sided)..... 222
First-aid kit (soft-sided)..... 222
Flat tyre
Changing a wheel..... 239
Fog light (extended range)..... 104
Foil covering
Radar and ultrasonic sensors..... 147
Folding table
Installing/removing..... 94
Moving..... 94
Using..... 96
Free Software..... 27
Frequencies
Mobile phone..... 245
Two-way radios..... 245
Front airbag..... 32
Front passenger seat
Manually adjusting..... 69
Front seat
rotating..... 74
Fuses..... 231

G

General operating permit number (EC)..... 248
Genuine parts..... 16
Glasses compartment..... 94
Glove compartment..... 93
Grab handles..... 69

H

Handbrake..... 145
Handling characteristics
Unusual..... 233
Hazard warning light system..... 103
Hazard warnings
Car-to-X-Communication..... 195
Head restraint
Adjusting electrically..... 89
Manually adjusting..... 88
Headlamp flashing..... 103
Help call
Mercedes-Benz emergency call system..... 223
High beam
Activating/deactivating..... 103
Adaptive Highbeam Assist Plus..... 106
Replacing light bulbs..... 109
High-pressure cleaner..... 217
High-voltage battery, Battery (high-voltage on-board electrical system)
Charge port, emergency release..... 144
Charging at time of departure..... 138
Charging duration..... 251
Charging prediction..... 138
Charging station, mode 3..... 140
Connection types..... 251
Disconnect device..... 127
Ending the charging process..... 144
Energy content..... 251
Energy flow display..... 132
Fast charging station, mode 3/4..... 141

General notes on charging..... 136
Indicator lamps on vehicle socket..... 139
Mains socket, mode 2..... 139
Notes..... 226
Setting the charging process..... 138
Setting the maximum charge level..... 138
Setting the maximum charging current..... 138
Starting the charging process..... 142
Stowing the charging cable..... 137
Type..... 251
Voltage types..... 251
Wallbox, mode 3..... 140

High-voltage on-board electrical system
Indicator lamps on vehicle socket..... 139

Highbeam
Adaptive Highbeam Assist..... 105

Hill Start Assist..... 156

Hinged windows
Child safety lock..... 49

HOLD function
Notes..... 156
Switching on/off..... 156

Home screen
Media display..... 186

Hotspot
Setting up..... 189

Household socket..... 99

I

Identification plate..... 248

Ignition lock..... 129

Immobiliser..... 66

Implied warranty..... 24

Importer information
Regulatory radio information..... 248

Inattention detection..... 164

Indicator lamps..... 7

inside rear-view mirror
automatic anti-dazzle mode..... 117
digital inside rear-view mirror..... 116

Installations..... 17

Instrument cluster
Adjusting the lighting..... 172
Available power display..... 172
Charge level display..... 171
Indicators on the display..... 171
Maintenance..... 220
Notes on warning/indicator lamps..... 275
Overview of displays..... 169
Power display..... 169
Warning/indicator lamps..... 7

Instrument lighting, Dashboard lighting..... 172

Intelligent Light System
Activating/deactivating..... 105
Active light function..... 104
Adaptive Highbeam Assist..... 105
Cornering light..... 104
Overview..... 104

Interior lighting
Ambient lighting..... 108
Replacing illuminants..... 111
Setting..... 107
Switch-off delay time..... 108

Interior motion sensor
Activating/deactivating..... 67
Function..... 67

Internet
Setting up a Wi-Fi hotspot..... 189
Web browsers..... 199

ISOFIX child restraint system
Seats suitable for attaching..... 42

ISOFIX child seat anchor
Fitting..... 43

J

Jack
Declaration of conformity..... 20
Storage location..... 231
Stowage compartment (rear)..... 232

Journeys abroad
Light adjustment low beam..... 102

Jump-start connection..... 227

K

Key
acoustic locking verification signal..... 50
Battery..... 51
Central locking system..... 51
electric sliding door open/close..... 57
Emergency key..... 51
Fastening to keyring..... 51
Functions..... 50
Pre-entry climate control..... 124
Problem..... 52
Programming the button for the electric sliding door..... 57
Programming the button for the rear window/tailgate..... 61
Start the vehicle..... 129
Unlocking setting..... 51

Key positions..... 129

L

Lamp..... 108
Lane detection..... 167
Lane Keeping Assist
Activating/deactivating..... 168
Function..... 167
Sensitivity..... 168
Language
Notes..... 190
Setting..... 190
Lashing points
Loads..... 252
Overview..... 207
Level control..... 135
Light switch (overview)..... 102
Lights
Activating/deactivating the surround lighting..... 107
Active light function..... 104
Adaptive Highbeam Assist..... 105
Adaptive Highbeam Assist Plus..... 106
Adjusting the instrument lighting..... 172
Automatic driving lights..... 102
Combination switch..... 103
Cornering light..... 104
Fog light (extended range)..... 104
Hazard warning lights..... 103
Headlamp flashing..... 103
High beam..... 103
Intelligent Light System..... 104
Light adjustment when driving abroad..... 102
Light switch..... 102
Low beam..... 102
Motorway mode..... 104
Parking lights..... 102
Range..... 103
Rear fog light..... 102
Responsibility with lighting systems..... 102
Standing lights..... 102
Switch-off delay time..... 107
Switching on the daytime running lights..... 102
Switching the Intelligent Light System on/off..... 105
Turn signal light..... 103
Limiter
Activating/deactivating..... 152, 154
Calling up a speed..... 152
Function..... 151
Increasing/decreasing speed..... 152
Lever..... 152
Passive mode..... 151
Requirements:..... 152
selecting..... 152
Setting the speed..... 152
Storing a speed..... 152
LINGUATRONIC
Operable functions..... 187
Starting..... 187
Live Traffic Information..... 195
Load compartment and rear interior lamps
Replacing illuminants..... 111
Load distribution..... 205
Load securing
Lashing points..... 207
Notes..... 206
Load securing aid
Load protection net..... 208
Luggage compartment partition..... 209
Loading guidelines..... 204
Locking/unlocking
Activating/deactivating the automatic locking mechanism..... 54
Doors (interior)..... 52
Emergency key..... 54
Low beam
Activating/deactivating..... 102
Light adjustment when driving abroad..... 102
Replacing light bulbs..... 109
lubricants
Operating fluids Notes..... 249
Luggage compartment partition
Folding up/down..... 209
Removing/fitting..... 209
Stowage compartments..... 209
Lumbar support (4-way)..... 73
Luxury rear seat
Adjusting electrically..... 86
Adjusting the head restraint..... 90
Bench seat anchorage / seating variants..... 75
EASY-ENTRY easy entry and exit feature..... 85
Moving..... 87

M

M+S tyres..... 233

Maintaining safe distance
Active Distance Assist DISTRONIC..... 154

Maintenance
ASSYST PLUS..... 213
Carpet..... 220
Display..... 220
Exterior lighting..... 219
Instrument cluster..... 220
Notes..... 213
Paint..... 218
Plastic trim..... 220
Real wood/trim elements..... 220
Reversing camera..... 219
Reversing camera/360° camera..... 219
Roof lining..... 220
Seat belt..... 220
Seat cover..... 220
Sensors..... 219
Vehicle socket..... 219
Wheels/rims..... 219
Windows..... 219
Wiper blades..... 219

Malfunction
Restraint system..... 28

Map
Displaying online map contents..... 195
Displaying weather information..... 195
Moving..... 195
Parking service..... 195
Selecting the map orientation..... 195
Setting the map scale..... 195
Switching motorway information on/off..... 195

Map functions..... 195

Maximum gross vehicle weight..... 248

MBUX..... 186

MBUX display
Home screen..... 186

MBUX multimedia system
Factory setting..... 190
Media..... 200
Mercedes me & Apps..... 183
Notes..... 185
Overview..... 185
Profile..... 188
Touchscreen..... 186

Media
Menu (on-board computer)..... 176
Operating media playback (on-board computer)..... 176
Overview of functions/symbols..... 200
Selecting a media source (on-board computer)..... 176

Media display
Home screen..... 186
Operating..... 186

Media mode
Connecting Bluetooth® audio equipment..... 201

Medical aids..... 23

Memory function
Outside mirrors..... 73
Seat..... 73

Menu (on-board computer)
Assistant display..... 173
Media..... 176
Navigation..... 174
Overview..... 172
Radio..... 175
Service..... 173
Settings..... 177
Telephone..... 177
Trip..... 173

Mercedes me app
Calling up services..... 184
Calling up your user account..... 183
Unlinking the user account..... 184

Mercedes me Apps..... 183

Mercedes me calls
Arranging a service appointment..... 180
Calling the Mercedes-Benz customer centre..... 180
Calling the Mercedes-Benz customer centre after automatic accident or breakdown detection..... 180
Consenting to the transfer of data..... 181
Information on call using overhead control panel..... 179
Transferred data..... 181

Mercedes me connect
Accident and Breakdown Management..... 182
Information..... 182
Making a call via the overhead control panel..... 179
Transferred data..... 183

Mercedes-Benz emergency call system, Emergency call
Automatic emergency call..... 223
Data transfer..... 224
Information..... 223
Manual emergency call..... 224
Overview..... 223

Mercedes-Benz GenuineParts..... 16
Mercedes-Benz service centre..... 22
Message memory..... 254
Mirror
adjusting/setting anti-dazzle mode (outside mirrors)..... 115
Mirrors
digital inside rear-view mirror..... 116
Rear visibility..... 117
Mobile phone
Charging..... 100
Frequencies..... 245
Maximum transmission output..... 245
Modifications..... 17
Motorway mode..... 104
Mounting a load..... 204
Multimedia system..... 186

N

Navigation
Activating..... 191
Destination entry..... 193
Displaying/hiding the menu..... 191
Electric Intelligence..... 194
Menu (on-board computer)..... 174
Overview..... 192
Route with charging stations..... 194
Navigation instructions (on-board computer)..... 174
Nominal tensile load of tie-down eyes..... 252

O

Occupant safety
Airbag..... 32
Automatic co-driver airbag shutoff..... 34
Automatic measures after an accident.. 37
Child seat..... 37
Pets in the vehicle..... 49
PRE-SAFE®..... 37
Seat belt..... 29
On-board computer
Assistant display menu..... 173
Digital speedometer..... 173
Displaying the energy flow..... 173
Displaying the range..... 173
Displaying the service due date..... 213
ECO display..... 133
Indicators on the display..... 171
Media menu..... 176
Menu navigation..... 174
Menu overview..... 172
Operation..... 170
Overview..... 170
Radio menu..... 175
Service menu..... 173
Settings menu..... 177
Telephone menu..... 177
Trip menu..... 173
On-board diagnostic interface..... 22
On-board electrical system battery (12 V)
Charging..... 227
Notes (vehicle battery)..... 225
Replacing..... 227
Starting assistance..... 227
On-board electronics
Engine electronics..... 245
Fitting two-way radios..... 245
Onboard Logic Unit
Data storage..... 26
Online services..... 26
Online services..... 26
Open Source Software..... 27
Opening angle
Limiting (EASY-PACK tailgate)..... 60
Opening/closing the bonnet..... 214
Operating fluids
Brake fluid..... 249
Notes..... 249
Notes on coolant (drive system)..... 250
Windscreen washer fluid..... 250
Operating safety..... 18
Outside mirrors
Adjusting/setting anti-dazzle mode..... 115
automatic anti-dazzle mode..... 117
Blind Spot Assist..... 166
Folding in/out..... 115
Memory function..... 73
Setting options..... 14
Overhead control panel
Adjusting the interior lighting..... 107
Overview..... 13
Owner's manual..... 17

P

Paint code..... 248
Panorama sliding sunroof
Notes..... 63
Opening/closing..... 64
Opening/closing the roller sunblind..... 64
Problems..... 66

Park position
Engaging..... 134
Engaging automatically..... 134
Parking
Active Parking Assist..... 161
PARKTRONIC..... 157
Parking aid
Active Parking Assist..... 161
PARKTRONIC..... 157
Parking Assist
Active Parking Assist..... 161
PARKTRONIC..... 157
Parking assistance systems
Active Parking Assist..... 161
Parking brake..... 145
Parking brake (electric)..... 145
Parking lights
Activating/deactivating..... 102
Replacing light bulbs..... 109
Parking out
Active Parking Assist..... 161
Parking service..... 195
Parking up..... 146
PARKTRONIC
Function..... 157
Switching on/off..... 158
PASSENGER AIR BAG
Status display, co-driver airbag..... 35
Permissible axle load..... 248
Permissible gross mass..... 248
Permitted towing methods..... 227
Pets in the vehicle..... 49
Plastic trim (care)..... 220
Pop-out windows
Opening/closing..... 62
Power display..... 169
Pre-entry climate control
Activating..... 125
Activating/deactivating using the button..... 126
At departure time..... 125
Via the key..... 124
PRE-SAFE®, Anticipatory occupant protection
Function..... 37
Reversing measures..... 37
Profile
Creating a new profile..... 188
Information..... 188
Selecting profile options..... 188
Protection of the environment
Driving style..... 16
Pulling
Towing methods..... 227
Pulling away..... 156

Q

QR code for rescue card..... 24
Qualified specialist workshop..... 22

R

Radar and ultrasonic sensors
Damage..... 147
Radio
Menu (on-board computer)..... 175
Radio regulations
Importer information..... 248
Regulatory radio identification..... 248
Specific absorption rate..... 248
Wireless applications..... 246
REACH regulation..... 23
Real wood (care)..... 220
Rear and load compartment lamps
Replacing illuminants..... 111
Rear bench seat
Adjusting the seat backrest (comfort rear bench seat)..... 79
Bench seat anchorage / seating variants..... 75
Folding forwards and backwards..... 80
Installing/removing (comfort rear bench seat)..... 80
Moving..... 79
Notes..... 75
Using the EASY-ENTRY easy entry and exit feature..... 78
Rear Cross Traffic Alert, Cross traffic warning..... 167
Rear fog light..... 102
Rear luggage rack
Notes..... 211
Rear seat
Adjusting the seat backrest..... 82
Bench seat anchorage / seating variants..... 75
EASY-ENTRY easy entry and exit feature..... 81
Fitting/removing..... 84

Folding forward/back..... 83
Luxury rear seat..... 86
Moving..... 82
Notes..... 75

Rear visibility
automatic anti-dazzle mode..... 117

Rear window
Opening/closing..... 60
Programming the key button..... 61

Rear window wiper
Activating/deactivating..... 113

Recuperation
Function..... 128
Setting..... 129

Recycling..... 16

Registration..... 22

Regulating headlamp range..... 103

Removing/fitting load protection net..... 208

Replacement key, Spare key..... 52

Replacing a wheel
Fitting a new wheel..... 241

Replacing illuminants
Illuminant (rear)..... 110
Mirror lamp..... 111
Rear and load compartment lamps..... 111
Signal and ambient lamp in the tail-gate..... 111
Surround lighting..... 111
Tail lamp..... 110

Replacing light bulbs
Daytime running lights..... 109
High beam..... 109
Light sources (front)..... 109
Low beam..... 109
Notes..... 108
Standing/parking lights..... 109
Turn signal light..... 109

Rescue card QR code..... 24

Rescue separation point (high-voltage on-board electrical system)..... 127

Resetting
MBUX reset function..... 190

Resetting the trip computer..... 173

Responsibility
Driving safety systems..... 147

Restraint system
Basic instructions for children..... 37
Function the event of an accident..... 29
Functionality..... 28
Malfunction..... 28
Protection..... 28
Protection impaired..... 28
Self-test..... 28
Warning lamp..... 28

Reversing camera
Function..... 158
Maintenance..... 219
Open camera cover (360° Camera)..... 159
Switching automatic mode on/off (360° Camera)..... 161

Roll away protection..... 156

Roller sunblind
Panorama sliding sunroof..... 64

Roof lining (care)..... 220

Roof load..... 253

Roof luggage rack
Load..... 253
Notes..... 211

Route
Alternative route..... 194
Calculating..... 194
Commuter route..... 194
Electric Intelligence..... 194
Navigation..... 192
Selecting options..... 194

Running-in notes..... 130

S

Safety system..... 148

Safety vest..... 222

Seat
4-way lumbar support..... 73
Adjusting electrically..... 71
Adjusting the armrest..... 74
Adjusting the head restraint electri-cally..... 89
Adjusting the head restraint manually..... 88
Bench seat anchorage / seating variants in the rear..... 75
Correct driver's seat position..... 69
Door control panel..... 14
Installing/removing (rear bench seat)..... 80
Manually adjusting..... 69
Memory function..... 73
rotating (front seat)..... 74
Side airbag..... 32
Switches the seat heating on/off..... 90

Seat belt
Activating/deactivating seat belt adjustment..... 31
Adjusting the height..... 31

Automatic tightening..... 31
Cleaning..... 220
Fastening..... 31
Protection..... 29
Protection impaired..... 30
Releasing..... 31
Warning lamp..... 31

Seat belt adjustment
Activating/deactivating..... 31
Function..... 31

Seat belt tensioners..... 29

Seat belt warning..... 31

Seat cover (care)..... 220

Seat ventilation
Activating/deactivating..... 92

Securing loads
Load protection net..... 208
Tie-down eyes..... 207

Securing luggage..... 204

Selector lever..... 133

Self-test
Automatic co-driver airbag shutoff..... 35
Restraint system..... 28

Sensors
Information..... 147
Maintenance..... 219

Service..... 213

Service (on-board computer)..... 173

Service centre..... 22

Service interval display..... 213

Setting the air distribution..... 121

Setting the airflow..... 121

Settings (on-board computer)..... 177

Shifting to neutral (transmission)..... 134

Side window
Problems..... 63

Side windows
Adjusting..... 62
Opening/closing..... 61
Opening/closing the pop-out window.... 62

Sliding door
Child safety lock..... 48
electric sliding door..... 55
Function..... 55
Opening/closing (from the inside)..... 55
opening/closing (from the outside)..... 54

Sliding sunroof..... 63

Slippery road surfaces..... 132

Smartphone Integration, iPhone®
Android Auto..... 199
Apple CarPlay®..... 199

Snow chains..... 234

Socket (12 V), 12 V socket..... 99

Socket (230 V)..... 99

Socket (high-voltage battery)..... 139

Software update..... 189

Sound
Menu..... 203

Sound generator..... 127

Sound settings..... 203

Spare parts..... 16

Spare wheel
Fitting/removing..... 243

Specialist workshop..... 22

Specific absorption rate (SAR)..... 248

Speed
Limit, Limiter..... 151
Save, cruise control..... 154
Save, DISTRONIC..... 154
Save, Limiter..... 154

Speed control
Active Distance Assist DISTRONIC..... 153
Cruise control..... 151
Limiter..... 151

Speedometer..... 169

Standing lights
Activating/deactivating..... 102
Replacing light bulbs..... 109

Start-off assist..... 156

Starting assistance..... 227

Starting-off aid..... 156

Status indicator
Co-driver airbag..... 35

Steering wheel
Adjusting..... 92
Driver's airbag..... 32

Steering-wheel buttons..... 8

Stopping the alarm..... 66

Stowage compartment (rear)
Jack..... 232
Vehicle tool kit..... 232

Stowage space
Armrest stowage compartment..... 93
Bottle holder..... 97
Glasses compartment..... 94

Glove compartment..... 93
Stowage compartment in the centre console..... 93
Summer tyres..... 233
Sun visor
Mirror lamp..... 111
Operating..... 117
Surround lighting
Replacing illuminants..... 111
Suspension..... 135
SVHC
Substances of very high concern..... 23
Switch-off delay time
Exterior..... 107
Interior..... 108
Switches the seat heating on/off..... 90
Switching on the ignition..... 129
Switching on the power supply..... 129
Switching the rear window heater on/off... 123
Switching the refrigerator box on/off..... 100
Synchronisation function..... 121
System settings
MBUX reset function..... 190
Overview..... 188

T

Table..... 94
Tail lamp (replacing illuminants)..... 110
Tailgate
EASY-PACK tailgate..... 59
Opening angle (EASY-PACK)..... 60
Opening in an emergency..... 58
Opening/closing..... 58
opening/closing (EASY-PACK)..... 59
Signal and ambient lamp in the tail-gate..... 111
Take-back of end-of-life vehicles..... 16
Technical data
Information..... 245
Radio regulations..... 248
Specific absorption rate (SAR)..... 248
Vehicle identification plate..... 248
Telephone, Smartphone
Bluetooth® telephony..... 198
Connecting a mobile phone..... 198
Functions in the telephone menu..... 199
Menu (on-board computer)..... 177
Notes..... 196
Operating modes..... 198
Secure Simple Pairing..... 198
Telephone menu overview..... 198
Temperature
Setting..... 121
setting centrally..... 121
TEMPMATIC (operating unit)..... 118
THERMOTRONIC (control panel)..... 119
Tie-down eyes
Loads..... 252
Top Tether..... 44
Touch Control
MBUX..... 186
Touchpad
Operating..... 186
Touchscreen..... 186
Tow-away protection
Activating/deactivating..... 67
Function..... 67
Towing
both axles on the ground..... 229
raised front axle..... 229
Towing eye
Fitting/removing..... 230
Storage location..... 230
Towing methods..... 227
Traffic information..... 195
Traffic Sign Assist
Function..... 165
Setting..... 166
Transmission
DIRECT SELECT lever..... 133
Drive program display..... 135
Drive programs..... 134
DYNAMIC SELECT switch..... 134
Engaging drive position..... 134
Engaging neutral..... 134
Engaging reverse gear..... 134
Selecting park position..... 134
Transmission position display..... 133
Transmission positions..... 133
Transmission position display..... 133
Transport (vehicle)..... 230
Transport by rail..... 130
Trim element (care)..... 220
Turn signal light
Replacing light bulbs..... 109
Two-way radios
Frequencies..... 245
Installation..... 245

Maximum transmission output..... 245

Tyre pressure
Checking (tyre pressure monitoring system)..... 236
Notes..... 234
Restarting the tyre pressure monitor... 237
Tyre pressure monitoring system..... 236
Tyre pressure table..... 235

Tyre pressure monitoring system
Checking the tyre pressures..... 236
Checking the tyre temperature..... 236
Function..... 236
Restarting..... 237

Tyre pressure table..... 235

Tyre temperature
Checking (tyre pressure monitoring system)..... 236
Tyre pressure monitoring system..... 236

Tyre tread..... 233

Tyres
Checking..... 233
Checking the tyre pressure (tyre pressure monitoring system)..... 236
Checking the tyre temperature (tyre pressure monitoring system)..... 236
Direction of rotation..... 239
Fitting..... 241
M+S tyres..... 233
Mounting..... 237
Noise..... 233
Removing..... 241
Replacing..... 237, 239
Restarting the tyre pressure monitor... 237
Selection..... 237
Snow chains..... 234
Storing..... 239
Summer tyres..... 233
Tyre pressure monitoring system..... 236
Tyre pressure table..... 235
Unusual handling characteristics..... 233
Wheel/tyre combination..... 242

U

Unfastening..... 31

Unlocking setting..... 51

Updates..... 189

USB port..... 100

V

Variable limiter..... 151

Vehicle
Activating/deactivating the automatic locking mechanism..... 54
Correct use..... 23
Data storage..... 24
Deactivating..... 145
Diagnostics connection..... 22
Equipment..... 17
Identification plate..... 248
Implied warranty..... 24
loading..... 230
lock automatically..... 54
Locking/unlocking (from the inside)..... 53
Locking/unlocking emergency key..... 54
Lowering..... 241
Medical aids..... 23
Parking..... 145
Parking up..... 146
QR code for rescue card..... 24
Raising..... 240
REACH regulation..... 23
Registration..... 22
Starting (key)..... 129
SVHC/substances of very high concern..... 23
Switching on the power supply..... 129
Towing away..... 227

Vehicle cameras..... 147

Vehicle data
Vehicle height..... 251
Vehicle length..... 251
Vehicle width..... 251
Wheelbase..... 251

Vehicle dimensions..... 251

Vehicle equipment..... 17

Vehicle identification number..... 248

Vehicle identification plate..... 248

Vehicle key..... 50

Vehicle level..... 135

Vehicle sensors..... 147

Vehicle socket
Emergency release..... 144
Indicator lamps..... 139

Vehicle socket (high-voltage battery)
Maintenance..... 219

Vehicle tool kit, Tool
Jack..... 231
Stowage compartment (rear)..... 232
Towing eye..... 230

Vehicle's high-voltage on-board electrical system
Charge port, emergency release..... 144
Disconnect device..... 127
Manually disconnecting..... 127
Rescue separation point..... 127

VIN..... 248

Visibility (demisting windows)..... 122

W

Warning system..... 66

Warning triangle
Removing..... 222
Setting up..... 222

Warning/indicator lamp
ABS warning lamp..... 277
Brake system warning lamp 276, 277
Electrical fault warning lamp..... 280
ESP® OFF warning lamp..... 278
ESP® warning lamp..... 278
High-voltage battery reserve..... 280
High-voltage battery warning..... 281
Indicator lamp for parking brake..... 279
Power steering system warning lamp..... 280
Reduced power warning lamp... 280
Restraint system warning lamp..... 276
Seat belt warning lamp..... 279
Tyre pressure monitoring system warning lamp..... 281
Warning lamp for distance warning function..... 280
Notes..... 275
PASSENGER AIR BAG..... 35

Warning/indicator lamps
Overview..... 7

Washer fluid..... 250

Washing by hand..... 218

Washing the engine..... 217

Weather information..... 195

Web browsers..... 199

Wheel rotation..... 239

Wheels
Changing..... 239
Checking..... 233
Checking the tyre pressure (tyre pressure monitoring system)..... 236
Checking the tyre temperature (tyre pressure monitoring system)..... 236
Fitting..... 241
Flat tyre..... 225
Maintenance..... 219
Mounting..... 237
Noise..... 233
Removing..... 241
Replacing..... 237, 239
Restarting the tyre pressure monitor... 237
Selection..... 237
Snow chains..... 234
Storing..... 239
Technical data..... 242
Tyre pressure..... 234
Tyre pressure monitoring system..... 236
Tyre pressure table..... 235
Unusual handling characteristics..... 233
Wheel/tyre combination..... 242

Wheels (care)..... 219

Wi-Fi
Setting up a hotspot..... 189

Window airbag..... 32

Windows
Demisting..... 122
Maintenance..... 219
Opening/closing..... 61
Removing mist..... 122

Windscreen
Demisting..... 122

Windscreen washer fluid..... 250

Windscreen wipers
Activating/deactivating..... 113
Replacing the wiper blades..... 113
Replacing the wiper blades (windscreen)..... 113
Replacing wiper blades (rear window)..... 115
Switching on/off (rear window)..... 113
Switching on/off (windscreen)..... 113

Winter operation..... 234

Winter tyres
Notes..... 233

Wiper blades
Maintenance..... 219
Replacing (rear window)..... 115
Replacing (windscreen)..... 113

Wireless applications..... 246
Workshop..... 22

Publication details

Internet

Further information about Mercedes-Benz vehicles and about Mercedes–Benz AG can be found on the following websites:

https://www.mercedes-benz.com

https://group.mercedes-benz.com

Documentation team

You are welcome to forward any queries or suggestions you may have regarding this Owner's Manual to the technical documentation team at the following address:

Mercedes-Benz AG, HPC: CAC, Customer Service, 70546 Stuttgart, Germany

©Mercedes–Benz AG: Not to be reprinted, translated or otherwise reproduced, in whole or in part, without written permission from Mercedes–Benz AG.

Vehicle manufacturer

Mercedes-Benz AG

Mercedesstraße 120

70372 Stuttgart

Germany

As at 02.12.22

Your Operator's Manuals

Digital in the vehicle

Discover the Operator's Manual in the multimedia system under "Vehicle". Begin with Quick Start, discover highlights and useful tips.

Vehicle document wallet in the vehicle

Here you can find information on operation, service work and the warranty for your vehicle in printed form.

Digital on the Internet

You can access the Operator's Manual on the Mercedes-Benz homepage.

Digital as an app

The Mercedes-Benz Guides app is available free of charge in common app stores.

Apple® iOS

Android™

4475842112Z102

Order no. T447 0784 02 Part no. 447 584 21 12 Z102 Edition 2023-05