GLC

Operator's Manual +

Mercedes-Benz

F254 0138 13

Front passenger air bag warning

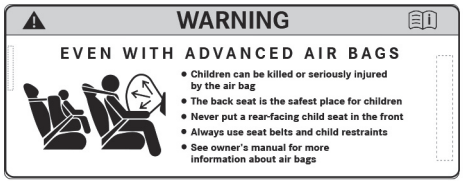

Air bag warning sticker for USA and Canada

WARNING Risk of injury or fatal injuries if the front passenger air bag is enabled

If the front passenger air bag is enabled, a child on the front passenger seat may be struck by the front passenger air bag in the event of an accident.

▶ NEVER use a rearward-facing child restraint system on a seat with an ENABLED FRONT AIR BAG. This can result in the DEATH of or SERIOUS INJURY to the CHILD.

Observe the chapter "Children in the vehicle".

Welcome to the world of Mercedes-Benz

Before your first drive, please read this Operator's Manual carefully and familiarize yourself with your vehicle. For your own safety and a longer service life of the vehicle, follow the instructions and warning notices in this Operator's Manual. Disregarding them may lead to damage to the vehicle or injury to people.

Damage to the vehicle resulting from the disregard of the instructions is not covered by the Mercedes-Benz Limited warranty.

The standard equipment and product description of your vehicle may vary and depends on the following factors:

- Model
- Order
- National version
- Availability

Your vehicle may therefore differ from that shown in the descriptions and illustrations in individual cases.

Mercedes-Benz reserves the right to introduce changes in the following areas:

- Design
- Equipment
- Technical features

The following documents are components of the vehicle:

- Digital Operator's Manual
- Printed Operator's Manual
- Maintenance Booklet
- Supplementary manuals relating to specific equipment
- Supplementary documents

Keep these documents in the vehicle at all times. Ensure that all documents are in the vehicle or passed on in the event of sale or rental.

Mercedes-Benz USA, LLC

Mercedes-Benz Canada, Inc.

A Mercedes-Benz Group AG Company

Disclaimer

The following online version of the Operator's Manual describes all models as well as all the standard and optional equipment of your vehicle. Country-specific differences in the language variants are possible. Note that your vehicle may not be fitted with all features described. This is also the case for safety-relevant systems and functions.

Please contact your authorized Mercedes-Benz dealer if you would like to have a printed Operator's Manual for other vehicle models and vehicle model years. The online version is the currently valid Operator's Manual. Possible variations to your vehicle may not be taken into account because Mercedes-Benz is constantly updating its vehicles and equipment in line with the current state of the art and introducing changes to the design and equipment.

Please also read the printed Operator's Manual, any supplementary documents and the digital Operator's Manual in the vehicle.

Copyright
All Rights Reserved. All texts, images, graphics, are subject to Copyright and other laws for the protection of intellectual property. They may not be copied for commercial purposes or for transmission, nor changed and used on other websites.

F254 0138 13

Symbols 6

Quick start and tips 7
Seats 7
Children in the vehicle 8
DIGITAL LIGHT 8
Touch-sensitive controls 9
Radio 10
Wi-Fi hotspot 11
Connecting a mobile phone 11
MBUX Voice Assistant 12
ENERGIZING Packages 12
Driving Assistance package 13
Parking Package 13
AC charging of the high-voltage battery (mode 2 oder 3) 14
DC charging of the high-voltage battery (mode 4) 14
Destination entry navigation 14
New multimedia system features 16
At the gas station 23
Preparing for a holiday 31
Luggage and loading 36
Ice and snow 42
Help in the event of a breakdown 48
Expert tips 56

At a glance 60
Cockpit 60
Cockpit (plug-in hybrid) 62
Indicator and warning lamps 64
Overhead control panel 68
Door operating unit and seat adjustment 70
Emergencies and breakdowns 72

Digital Operator's Manual 74
Calling up the Digital Operator's Manual 74

General notes 75
Protecting the environment 75
Mercedes-Benz Genuine Parts 76
Touch-sensitive controls 76
Mercedes me App 77
Service and vehicle operation 78
Operating safety 79
Installing the license plate on the front license plate bracket 82
National information for components relevant to radio regulation 83
Diagnostics connection 83
Qualified specialist workshop 84
Correct use of the vehicle 85
Notes for persons with electronic medical aids 85
Problems with your vehicle 86
Reporting safety defects 86
Limited Warranty 87
QR code for rescue card 87
Data storage 87
Copyright 92

Occupant safety 93
Brief overview of the most important points 93
Information on the automatic functions of the restraint system 100
Purpose and function of the restraint system 104
Seat belts 109
Airbags 110

Children in the vehicle **111**
Brief overview of most important points 111
Important safety notes 111
Suitable child restraint systems for the transport of children 117
Securing the child restraint system 117
Child safety locks 123
Occupant presence reminder 126

Opening and closing **127**
SmartKey 127
Doors 132
Running boards 136
Cargo compartment 136
Side windows 142
Sliding sunroof 145
Anti-theft protection 149

Seats and stowing **152**
Notes on the correct driver's seat position .. 152
Notes on grab handles 152
Seats 153
Steering wheel 164
Easy entry and exit feature 166
Memory function 168
Stowage areas 170
Cup holder 184
Sockets 187
Wireless charging of the mobile phone and connection with the exterior antenna 189
Installing/removing the floor mats 191

Light and visibility **192**
Exterior lighting 192
Interior lighting 202
Windshield wiper and windshield washer system 204
Mirrors 208
Area permeable to radio waves on the windshield 211

Climate control **212**
Overview of climate control systems 212
Operating the climate control system 214

Driving and parking **227**
Driving 227
DYNAMIC SELECT 254
Automatic transmission 261
Function of the 4MATIC 270
Refueling 270
Charging the high-voltage battery (plug-in hybrid) 273
Parking 290
Driving and driving safety systems 303
Trailer hitch 387
Vehicle towing instructions 391

Driver's display **392**
Notes on the driver display 392
Operating the driver display 392
Driver display menus 393
Head-up Display 406
Vehicles with a 48 V on-board electrical system 408
Function of the power meter 409
Overview of status indicators on the driver display 409
Overview of status indicators on the driver display (Mercedes-AMG vehicles) 410

MBUX Voice Assistant **412**
Notes on operating safety 412
Operation 412
Using MBUX Voice Assistant effectively 414
Essential voice commands 415

MBUX multimedia system **420**
Overview and operation 420
System settings 443
AMG TRACK PACE 452
Plug-in hybrid settings 457
Off-road menu 458
Fit & Healthy 459
Navigation and traffic 460
Telephone 503
Online and Internet functions 531
Media 539
Radio 546
Sound 552

Maintenance and care **556**
ASSYST PLUS service interval display 556
Maintenance Management 557
Telediagnosis 557
Engine compartment 558
Cleaning and care 566

Breakdown assistance **575**
Emergency 575
Flat tire 576
Battery (vehicle) 583
Tow starting or towing away 590
Electrical fuses 596

Wheels and tires **600**
Notes on noise or unusual handling characteristics 600
Notes on regularly inspecting wheels and tires 600
Notes on snow chains 601
Turning snow chain mode on or off 601
Tire pressure 601
Loading the vehicle 608
Tire labeling 612
Definition of terms for tires and loading 618
Changing a wheel 620
Emergency spare wheel 630
Collapsible spare wheel 631

Technical data **635**
Notes on technical data 635
Vehicle electronics 635
Radio regulations 637
Vehicle identification plate, VIN and engine number overview 756
Operating fluids 757
Vehicle data 767
Trailer hitch 773

Display messages and warning/indicator lamps **777**
Display messages 777
Warning and indicator lamps 864

Index **886**

In this Operator's Manual, you will find the following symbols:

WARNING Danger due to failure to observe the warning notices

Warning notices draw your attention to hazards that may endanger your health or life, or the health or life of others.

▶ Observe the warning notices.

ENVIRONMENTAL NOTE Environmental damage due to failure to observe environmental notes

Environmental notes include information on environmentally responsible behavior or environmentally responsible disposal.

▶ Observe environmental notes.

NOTE Damage to property due to failure to observe notes on material damage

Notes on material damage inform you of risks which may lead to your vehicle being damaged.

▶ Observe notes on material damage.

ⓘ These symbols indicate useful instructions or further information that could be helpful to you.

▶	Instruction
(⟶ page)	Further information on a topic
Display	Display in the central display
⤳▶	Highest menu level, which is to be selected in the multimedia system
▶▶	Relevant submenus, which are to be selected in the multimedia system
*	Indicates a cause

Seats

Adjusting the seats

Adjusting the seats manually and electrically

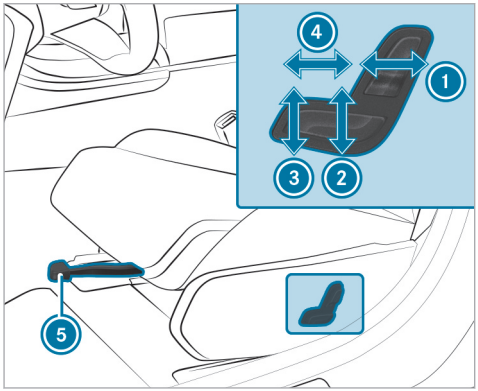

1. Seat backrest inclination
2. Seat height
3. Seat cushion inclination
4. Seat cushion length
5. Seat fore-and-aft position

▶ **To adjust the seat fore-and-aft position:** lift lever 5 and slide the seat into the desired position.

▶ Make sure that the seat is engaged.

Adjusting the seats electrically using the door control panel

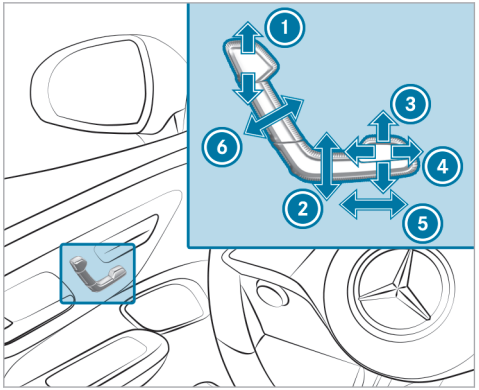

1. Head restraint height
2. Seat height
3. Seat cushion inclination
4. Seat cushion length
5. Seat fore-and-aft position
6. Seat backrest inclination

▶ Save the settings with the memory function (→ page 169).

Children in the vehicle

Safely transporting children in the vehicle

- ▶ Always observe when children are traveling in the vehicle (→ page 111)
- ▶ Important warning notices (→ page 113)
- ▶ Suitable vehicle seats for installing a child restraint system (→ page 111)
- ▶ Activating/deactivating the seat belt's special seat belt retractor (→ page 119)
- ▶ Installing an ISOFIX child restraint system on the rear seat (→ page 120)
- ▶ Attaching Top Tether belt (→ page 121)
- ▶ Securing the child restraint system with the seat belt (→ page 122)
  - Notes on rearward-facing and forward-facing child restraint systems on the front passenger seat (→ page 115)
- ▶ Automatic front passenger air bag shutoff (→ page 115)
- ▶ Child safety locks for the rear side windows (→ page 124)
- ▶ Child safety locks for the rear doors (→ page 123)

DIGITAL LIGHT

Adaptive functions of the DIGITAL LIGHT

With this system, the headlamps adapt to the driving and weather situation. It also provides extended functions for improved illumination of the road.

The system comprises the following adaptive functions:

- Active headlamps (→ page 195)
- Topographical compensation (→ page 195)

▶ **To activate or deactivate DIGITAL LIGHT:**
- Briefly press [⌂] on the multimedia system display.
- Select Settings.
- Select Light.
- Select DIGITAL LIGHT.
- Activate or deactivate Dynamic Low Beam.

▶ **To activate or deactivate enhanced assistance functions:**
- Select Supporting Projections.
- Activate or deactivate the desired projection.

The availability of the assistance functions is dependent on the country.

Touch-sensitive controls

Overview of touch-sensitive controls

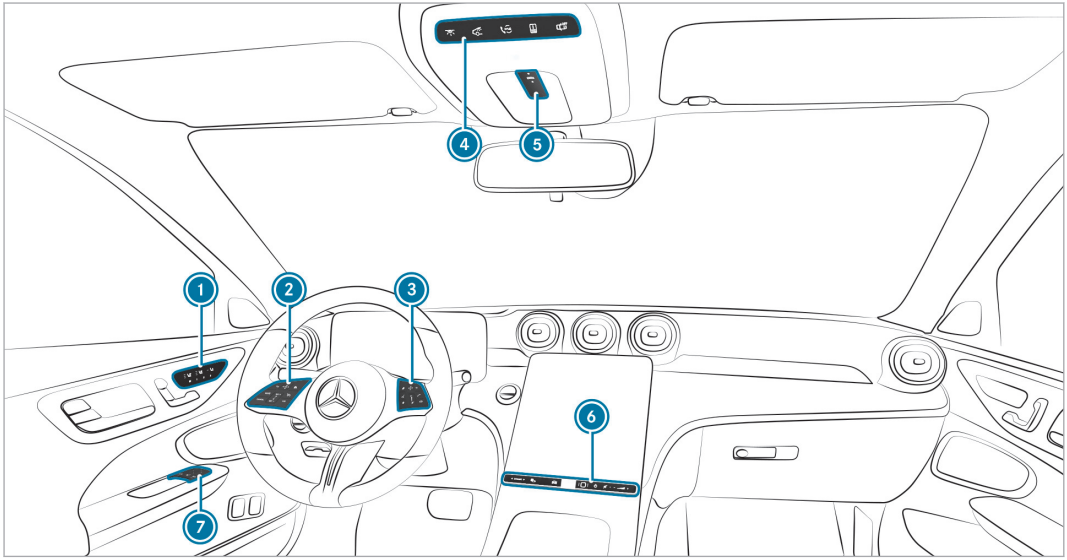

F254 0138 13

1. Control panel:
   - Switches the seat heating on/off
   - Switches the seat ventilation on/off
   - M Operates the memory function
2. Control panel:
   Driver's display
   - Active Distance Assist DISTRONIC
3. Control panel for the MBUX multimedia system
4. Control panel:
   - Switches the front interior lighting on/off
   - Switches the rear interior lighting on/off
   - me button
   - Opens/closes the panoramic sliding sunroof rear roller sunblind
   - Switches automatic interior lighting control on/off
5. Opens/closes the panoramic sliding sunroof
   - Opens/closes the panoramic sliding sunroof front roller sunblind
6. Control panel:
   - DYNAMIC SELECT
   - Active Parking Assist
   - Quick vehicle access
   - Fingerprint sensor
   - Switches the MBUX multimedia system on/off
   - Switches sound on/off
   - Adjusts the volume
7. Operates the outside mirrors

▶ Observe the notes on the touch-sensitive controls (→ page 76).

Radio

Operating radio

▶ **To switch to radio:**
- Briefly press on the multimedia system display.
- Tap on .

▶ **To set the frequency band:**
- Briefly press on the multimedia system display.
- Tap on .
- Select a frequency band or a favorite.

▶ **To set a radio station:**
- Briefly press on the multimedia system display.
- Tap on .
- Swipe to the left or right on the control element or select a radio station.

▶ **To call up the radio station list:**
- Briefly press on the multimedia system display.
- Tap on .
- Select .

▶ **To search for radio stations using station names or frequency entry:**
- Briefly press on the multimedia system display.
- Tap on .
- Select .
- Enter a station name or frequency.

- Select a station.

▶ To store radio stations:
- Briefly press [⌂] on the multimedia system display.
- Tap on [i].
- Select [☆].

▶ To set the traffic information service volume increase:
- Briefly press [⌂] on the multimedia system display.
- Tap on [⚙].
- Select System.
- Select Audio.
- Select Navigation and Traffic Announcements.
- Set a value for Increase Volume for Traffic Announcement.

Wi-Fi hotspot

Setting up a Wi-Fi hotspot

Generally, two types of Wi-Fi connection are available:

- Using the multimedia system as a Wi-Fi hotspot

  The multimedia system serves as a Wi-Fi hotspot for mobile communication devices such as a smartphone or tablet PC.

  The data volume of the vehicle or an already connected tethering device is used for the data connection.

  Data volumes must be purchased via the Mercedes me Portal.

  The use of the vehicle data tariff by external devices is not available in all countries.
- Using a mobile communication device as a Wi-Fi hotspot (tethering)

  An external Wi-Fi hotspot is accessed for the Internet connection of the multimedia system.

  The data tariff of the mobile communication device via Purchased Plan is used for the data connection.

Options for setting up a connection:

- QR code

  The connection is set up by scanning the QR code shown on the multimedia system.
- Security key

  The connection is established by entering the security key displayed on the multimedia system.

Connecting a mobile phone

Connecting a mobile phone

▶ Activating Bluetooth®:
- Make sure that the mobile phone Bluetooth® is switched on.
- Tap on [⌂] the central display or media display.
- Select Settings.
- Select System.

- Select Internet and Bluetooth.
- Activate Bluetooth®.

▶ **Searching for a mobile phone:**
- Tap on [⌂] the central display or media display.
- Select Phone.
- Select [⚙].
- Select Devices.
- Select Devices.
- Select Connect New Device.

▶ **To authorize a mobile phone:**
- Select a mobile phone.

A code is displayed in the multimedia system and on the mobile phone.

▶ If the codes match, confirm the code on the mobile phone.

MBUX Voice Assistant

Operating the MBUX Voice Assistant

You can use the MBUX Voice Assistant to operate the following functions depending on the vehicle equipment:

- Telephone
- Text messages and e-mails
- Navigation
- Radio and media
- Vehicle functions
- Online functions

Examples of possible voice commands:

- To operate the phone: **Call my father.**
- To manage e-mails: **Show me my new e-mails.**
- To operate the navigation: **Search for an Asian restaurant, but not Japanese, in South London.**
- To operate the radio: **Which station am I currently listening to?**
- To operate media: **Play a similar track.**
- To operate climate control: **My feet are cold.**
- To operate vehicle functions: **Open the window.**
- To call up the weather: **Will it be sunny tomorrow?**
- To ask a general knowledge question: **Who painted the picture "The Scream"?**

ENERGIZING Packages

Operating ENERGIZING COMFORT

▶ **To start an ENERGIZING program:**
- Briefly press [⌂] in the multimedia system display.
- Select Comfort.
- Select ENERGIZING COMFORT.
- Select a program and start with [▶].

▶ **To configure an ENERGIZING program:**
- Select a program.
- Select Settings.
- Switch the functions included in the program on or off.

▶ To start Power Nap:
- Select Power Nap.
- Select [▶] for the desired seat.

▶ To start a training program:
- Select Training.
- Select a program and start with [▶].
- To activate fragrancing for training, select Fragrance.

▶ To start Tips:
- Select Tips.
- Select an area of the body and start with [▶].

Driving Assistance package

Functions of the Driving Assistance Package

The Driving Assistance Package contains various functions that assist you when driving. For this purpose, your vehicle uses cameras and radar sensors to monitor the area in front of, behind or next to the vehicle.

The following functions are included in the Driving Assistance Package, depending on country-specific availability:

▶ Active Distance Assist DISTRONIC (→ page 318)

You can watch an animation on this topic via the following link:

▶ Active Speed Limit Assist (country-dependent) (→ page 324)

You can watch an animation on this topic via the following link:

▶ Route-based speed adaptation (country-dependent) (→ page 325)

▶ Active Brake Assist (→ page 337)

You can watch an animation on this topic via the following link:

▶ Active Steering Assist (country-dependent) (→ page 329)

You can watch an animation on this topic via the following link:

▶ Active Emergency Stop Assist (country-dependent) (→ page 331)

▶ Active Lane Change Assist (country-dependent) (→ page 333)

▶ Active Stop-and-Go Assist (country-dependent) (→ page 327)

▶ Active Blind Spot Assist with exit warning (→ page 347)

You can watch an animation on this topic via the following link:

▶ Active Lane Keeping Assist (→ page 350)

Parking Package

Functions of the Parking Package

Depending on country-specific availability, your vehicle may be equipped with various functions to assist you with parking and maneuvering. For this purpose, your vehicle uses cameras and ultrasonic sensors to monitor the vehicle surroundings.

Depending on the equipment version, the following systems and functions are part of your Parking Package:

- **Rear-view camera:** monitors the area behind the vehicle and shows it on the driver display (→ page 357).
- **360° camera:** a system comprising four cameras that cover the immediate vehicle surroundings and showm them on the driver display (→ page 359).
- **Parking Assist PARKTRONIC:** an electronic parking assistance system that monitors the area surrounding your vehicle and the distance to obstacles in the vicinity using ultrasound (→ page 366).
- **Active Parking Assist:** an electronic parking assistance system that assists you when you are parking or exiting a parking space by changing gear, accelerating, braking and steering the vehicle (→ page 369).
- **Memory Parking Assist:** can park your vehicle in and leave a previously recorded and stored parking space (→ page 379).
- **Trailer Maneuvering Assist:** Trailer Maneuvering Assist assists you when you are backing up with a trailer. The rear-view camera monitors the articulation angle between the vehicle and the trailer and adjusts it to a specified value. Trailer Maneuvering Assist also limits your speed (→ page 383).

You can watch an animation on this topic via the following link:

AC charging of the high-voltage battery (mode 2 oder 3)

AC charging (mode 2 or 3)

Starting and ending the charging process

- More notes on charging the high-voltage battery (→ page 273)
- Overview of the charging cable control panel (→ page 280)

DC charging of the high-voltage battery (mode 4)

DC charging (mode 4)

Starting and ending the charging process

- More notes on charging the high-voltage battery (→ page 273)
- Overview of the charging cable control panel (→ page 280)

Destination entry navigation

Entering a navigation destination

- Briefly press [⌂] in the multimedia system display.
  The zero layer is shown.

  The zero layer is your own personalized user interface with the digital map in the foreground and the applications that you use the most. You can switch between the zero layer and the home screen with a classic menu.
- Select [🔍].

Select the following options for destination entry:

- Enter a POI, an address or a three-word address in the input line.

  Online search results for POIs (if available) may contain additional information, for example opening times and prices. The information is provided by an online map service.

  You can find further information about 3-word addresses at: http://+what3words.com
- Select a destination suggestion.

  Requirements:

  The Navigation option is switched on in the user settings for Suggestions.

  The multimedia system has gathered sufficient data in order to show destination suggestions.
- Select Previous Destinations.

  Select a previous destination.

  You can save the destination as a favorite .
- Select POIs.

  Select a POI category, e.g. P or enter a POI name or POI category in the input line.

  If search results are displayed, limit them with Filter, for example by search position or the desired travel time.
- Select Contacts.

  Requirements:

  A mobile phone is connected to the multimedia system and contacts have been downloaded.

  The contact contains a navigable address.
- Enter the geocoordinates as latitude and longitude in the input line.

  Example 1: 47°58'11"N 7°57'25"E (degrees, minutes, seconds and compass direction)

  Example 2: 47.969722 7.956944 (decimal degrees)
- Select a destination on the map.
- Select Favorites.

  Requirements:

  The destinations have been saved as favorites.
- Select Received Destinations.

  Requirements:

  There is an Internet connection for receiving external destinations.

  The destinations have been sent to the vehicle.

New multimedia system features

Information about the telephone menu

1. Bluetooth® device name of the currently connected mobile phone/of the mobile phone
2. Bluetooth® device name of the currently connected mobile phone/of the mobile phone (two phone mode)
3. Signal strength of the mobile phone network
4. Battery status of the connected mobile phone
5. Options
6. Messages
7. Calls up my devices
8. Numerical pad
9. Starts contact search

Telephone menu overview

Via the telephone menu you can use the functions in connection with your mobile phone.

The following functions can be used:

- Call lists
- Contacts
- Messages
- Device manager

Using call lists

If your mobile phone supports the PBAP Bluetooth® profile, the call lists from the mobile phone are displayed in the multimedia system.

The following functions are available:

- Making calls from the call list
- Opening contacts on the call list

Messages

In the message menu you can receive text messages and create and send them with the help of the MBUX voice assistant. In addition, you can conveniently use the read-aloud function during the journey.

Device manager

In the device manager, you can connect your mobile phone with the multimedia system.

You have the option of using your mobile phone alone in single telephone mode or together with another mobile phone in two phone mode.

Using contacts

If you permit the multimedia system to access the contacts in your mobile phone, you can use these in the vehicle. You can store up to 8,000 contacts.

The following options are available to you via the contacts menu:

- Making telephone calls (calling a contact)
- Navigation

- Composing messages with the help of the MBUX voice assistant
- Additional options

The contacts from your mobile phone can be downloaded automatically or manually.

Conducting a call

When conducting a call, additional functions are available apart from making, accepting or rejecting a call. For example, you can switch between calls, conduct a call with several participants or conference calls.

It is also possible to accept or reject waiting calls. If you receive a call while already in a call, a message is displayed.

During a call you can activate the following functions:

- Microphone off
- Fade in the numerical pad to send DTMF tones
- Add a call
- Hands-free mode to transfer the call to the front or rear passenger compartment
- Privacy mode to transfer the call to the telephone or headphones

Information about navigation

Zero layer with digital map

1 Navigation module (reduced view)
Route guidance active:
The navigation module shows the information relevant to the route in the zoomed-out view, e.g. the destination or a traffic delay
[⊗] Ends the current route guidance
Tapping opens the navigation module in the expanded view with the route overview

2 Enters a destination

3 Searches for a parking space

4 Sets map orientation [⊘] and map type

5 Current vehicle position (vehicle symbol or arrow)

6 Display area with entertainment sources, phone, active applications and suggestions

7 Navigation window shows the next maneuver (zoomed out view) or the route monitor (zoomed in view)
Route guidance active: route monitor shows, e.g. route sections, upcoming driving maneuvers with lane recommendations, destination, traffic delays, toll stations, 3D images at freeway exits, online content
[🔊] Switches off navigation announcements
[🔇] Switches on navigation announcements

When you switch on the multimedia system or after selecting [⌂], the digital map is shown in the zero layer.

ⓘ The zero layer is your own personalized user interface with the digital map in the foreground and the applications that you use the most. You can switch between the zero layer and the home screen with a classic menu.

The navigation system offers many options for destination entry, route planning and route guidance. The traffic situation is taken into account during route guidance. When using route guidance with augmented reality, additional information can be shown in a camera image before a turning maneuver. Services and apps help you reach the destination quickly, safely and in comfort.

Start entering the destination via ② [🔍] on the digital map. You can enter the POI, address or contact as the destination on-board or search online using a map service. Or you select a previous destination. The destination can be stored here as a favorite or be saved as an address for home and work. When the Allow Destination Suggestions option is switched on, the vehicle makes suggestions based on your visited navigation destinations. If external destinations and routes are received from apps or services, these are also available.

The following options are available for route planning, for example:

- Route options:

  e.g. avoid or use toll roads, tunnels, unpaved roads or areas
- Intermediate destinations
- Alternative routes
- Commuter route
- Automatic gas station and service station search

You can record and save routes then select or share them with a USB device.

Lane recommendations are shown during route guidance on multi-lane roads. When driving on a freeway, service facilities on the route ahead can be shown and used for route guidance.

The Live Traffic Information service takes the current traffic situation into account. The map can show the current traffic flow, traffic incidents or warning messages, e.g. before the end of traffic jams that pose a risk.

Hazardous situations on public roads are detected automatically by the vehicle via Car-to-X-Communication or these can be reported by the driver. The early warning makes it possible to adapt your driving characteristics in good time. Accidents, broken-down vehicles, weather hazards or a vehicle with activated hazard warning lights are shown on the map.

For route guidance with augmented reality, information objects such as arrows indicating a turn, street names and house numbers are shown in a video image during the driving maneuver or at traffic lights.

The map shows map data from the database or from an online map service. In small map scales, buildings are shown as realistic images. The online map update service makes possible the updating of the map data.

Weather information and data from other services can be shown on the map. Parking garages with the corresponding equipment, deliver data about

the current occupancy and about parking charges, for example.

The options offered vary depending on the country, vehicle equipment and available services.

Navigation module (expanded view) with route overview

Example: route guidance is active

1. Destination
2. Searches for a gas station
3. Switches traffic information display on or off

Information on radio

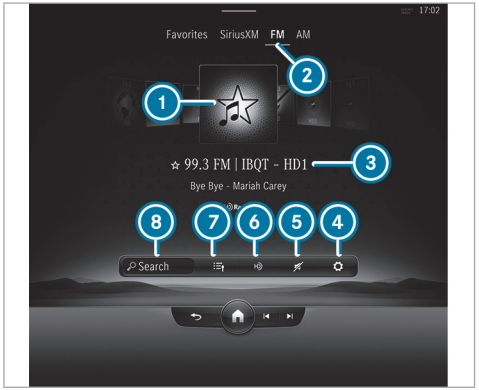

1. Station logo
2. Active frequency band
3. Station name or set frequency
4. Settings
5. Mutes volume
6. Switches HD Radio® on/off
7. Station list
8. Search

Using the radio menu you can play a multitude of radio stations and use the Internet Radio TuneIn. Search for your preferred stations and save these as favorites or in station lists.

ⓘ The function of TuneIn Internet radio is country-dependent.

Radio text: this function shows you the station name, the track and the artist for the song currently playing, for example.

Information on media

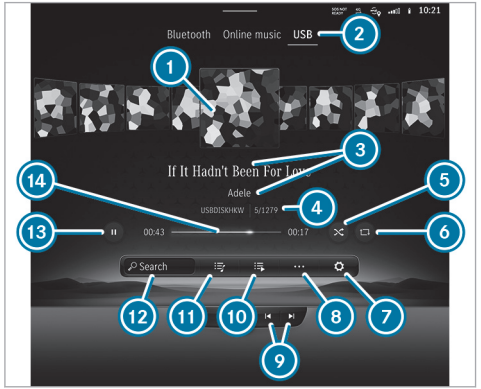

1. Album cover
2. Active media source
3. Track and artist
4. Active data storage medium and current track number/track in playback list
5. Random playback
6. Repeat
7. Settings
8. Additional options
9. Previous or next track and fast rewind or fast forward
10. Additional categories
11. Playlists and categories
12. Media search
13. Controls playback
14. Timeline

Using the Media application, you can set and use the audio and video functions of your multimedia system. You can listen to music or look at videos, for example.

USB: Using the USBmenu, you can play back your own audio or video data from a data storage medium connected by USB.

Bluetooth®: Using the Bluetooth menu, you can connect Bluetooth® audio equipment with the multimedia system and play back the available tracks on the audio equipment. Connecting the device can be conveniently handled in the device manager, so you can complete all settings with just a few clicks.

Online music: The Online Music menu allows you to access music streaming services.

Notes on comfort

The Comfort menu makes all the functions available that contribute to your comfort when driving or taking a break.

Seat Comfort

The Seat menu allows you to flexibly adjust the contours of the seats to your needs by adjusting the side bolsters and lumbar support independently. You can save these settings in your Mercedes me profile, so they can be called up each time you drive. With the Seat Kinetics function, you can start a program that causes slight modifications of the seat position when you are driving. These modifications promote a healthy back.

Massage

In the Massage menu you will find the massage program that are available for your vehicle. By selecting the desired program you start it directly and it runs for a period of approximately ten

minutes, depending on the program selected. With the Intensive function you can increase the effect of the massage program.

Ambient light

In the Ambient Light menu you can set the color and brightness for your ambient lighting. Using the Link Zones function, the ambiance, accent and impression zones can be regulated separately so that you can set the lighting of your vehicle individually.

Information about smartphone integration

Using the Smartphone Integration menu, various applications are available that can bring the functions of your mobile phone to the multimedia system display. Operation can by carried out via the touchscreen or voice control, for example.

Only one mobile phone at a time can be connected via Smartphone Integration to the multimedia system. Also for use with two phone mode with Smartphone Integration, only one additional mobile phone can be connected using Bluetooth® with the multimedia system.

Use Android Auto for mobile phones with the Android operating system and use Apple CarPlay® with your iPhone®. The full functionality of Android Auto and Apple CarPlay® is only possible with an Internet connection.

Information on AMG Performance

Using the AMG Performance menu, you can call up information about the performance of your vehicle.

Depending on the vehicle the following menus are available:

- Energy Flow

  Visualization of the energy flow in the vehicle
- Consumption

  Display of the current and average consumption values of the vehicle
- Vehicle

  Display of vehicle data
- Engine

  Display of engine data such as current power and torque
- Drive

  Display of current data of various drive elements such as current, voltage and temperature.

Information about vehicle info

You can have important vehicle information displayed in the Info menu. At a glance you will have an overview of vehicle and engine data or current consumption values, for example. In addition, you can call up the Digital Operator's Manual via the Operator's Manual menu item.

Vehicle data

The following data will be shown, for example:

- Activity of the acceleration and brake pedal
- Activity of the suspension strut
- Wheel angle
- G-force display for the linear and lateral acceleration

Engine data

The following data is shown:

- Transmission oil temperature
- Engine/coolant temperature
- Performance
- Torque
- Boost pressure

Consumption data

Depending on your driving style, this display shows the current and average fuel consumption. Together with the displays of vehicle and engine data, you can adapt your driving style to be as efficient and economical as possible.

Information about Mercedes me Apps

Various services and online functions are available via the Apps Mercedes me menu:

- Managing Mercedes me services
- Using the dashcam
- Using the web browser to surf the Internet

You require a user account, and have to connect your vehicle with the user account, in order to be able to use services.

ⓘ If the Mercedes me App is available on a mobile phone, the vehicle connection can be accomplished using the QR code shown.

Please not that the available features are country-dependent.

Information on settings

In the Settings you can set the basic configuration for your multimedia system and the vehicle. You have access to all functions in this menu, from switching the driver assistance systems on and off to display and language settings.

The settings are structured in the following menus:

- Assistance
- Vehicle
- Light
- System

Assistance menu

With the Assistance menu you have direct access to the driver assistance systems which are installed in your vehicle and can either switch these on or off, or configure according to your wishes.

Vehicle menu

Here you can activate the following functions, for example:

- Automatic folding in of the outside mirrors when parking the vehicle
- Automatic adjustment of the seat and steering wheel, for comfortable entry and exit from the vehicle
- Automatic activation of the 360° camera when selecting reverse gear

Light menu

All the light settings can be carried out in the Light menu. You can activate or deactivate the Intelligent Light System here, set for how long your vehicle should remain lit after parking or unlocking or switch the function off.

System menu
All important settings for the multimedia system can be carried out in the System menu.

You can carry out the following settings, for example:

- Setting the system language
- The configuration of Wi-Fi and Bluetooth®
- Setting of time and date

At the gas station

Refueling the vehicle

WARNING Risk of fire or explosion from fuel

Fuels are highly flammable.

- Fire, open flames, smoking and creating sparks must be avoided.
- Before refueling, switch off the vehicle and, if installed, the stationary heater, and leave them switched off during refueling.

WARNING Risk of injury from fuels

Fuels are poisonous and hazardous to your health.

- Do not swallow fuel or let it come into contact with skin, eyes or clothing.
- Do not inhale fuel vapor.
- Keep children away from fuel.
- Keep doors and windows closed during the refueling process.

If you or other people come into contact with fuel, observe the following:

- Immediately rinse fuel off your skin with soap and water.
- If fuel comes into contact with your eyes, immediately rinse them thoroughly with clean water. Seek medical attention immediately.
- If you swallow fuel, seek medical attention immediately. Do not induce vomiting.
- Change immediately out of clothing that has come into contact with fuel.

WARNING Risk of fire and explosion due to electrostatic charge

Electrostatic charge can ignite fuel vapor.

- Before you open the fuel filler cap or take hold of the pump nozzle, touch the metallic vehicle body.
- To avoid creating another electrostatic charge, do not get into the vehicle again during the refueling process.

NOTE Damage caused by the wrong fuel

Vehicles with a gasoline engine:

Even small amounts of the wrong fuel could result in damage to the fuel system, the engine and the emission control system.

- Refuel only with low-sulfur spark-ignition engine fuel.

This fuel may contain up to 10% ethanol. Your vehicle is suitable for use with E10 fuel.

Never refuel with one of the following fuels:

- Diesel
- Gasoline with more than 10% ethanol by volume (e.g. E15, E85, E100)
- Gasoline with more than 3% methanol by volume (e.g. M15, M30, M85, M100)
- Gasoline with metallic additives

If you have accidentally refueled with the wrong fuel:

▶ Do not switch on the vehicle.

▶ Consult a qualified specialist workshop.

! **NOTE** Do not use diesel to refuel vehicles with a gasoline engine

If you have accidentally refueled with the wrong fuel:

- Do not switch on the vehicle. Otherwise fuel can enter the engine.

Even small amounts of the wrong fuel could result in damage to the fuel system and the engine. The repair costs are high.

▶ Consult a qualified specialist workshop.

▶ Have the fuel tank and fuel lines drained completely.

! **NOTE** Damage to the fuel system due to overfilling the fuel tank

▶ Only fill the fuel tank until the pump nozzle switches off.

If too much fuel has been added due, for example, to a faulty filling pump:

▶ Do not switch on the vehicle.

▶ Consult a qualified specialist workshop.

! **NOTE** Fuel may spray out when you remove the fuel pump nozzle

▶ Only fill the fuel tank until the pump nozzle switches off.

Requirements

- The vehicle is unlocked.
- **Plug-in hybrid with gasoline engine:** the fuel tank was bled before refueling (→ page 273).

Observe the notes on service fluids and fuel.

Refuel only with fuel that has at least the octane number specified in the information label in the fuel filler flap. Otherwise, engine output may be reduced and fuel consumption increased.

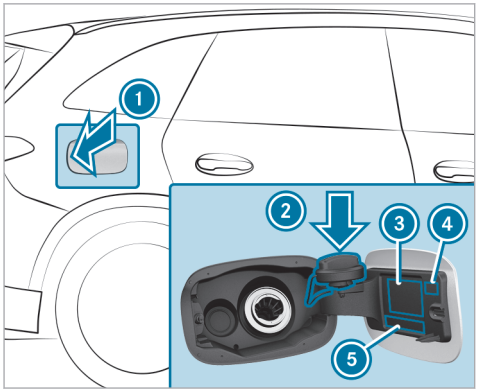

1. Fuel filler flap
2. Bracket for the fuel filler cap
3. Tire pressure table
4. QR code for rescue card
5. Fuel type

ⓘ **Plug-in hybrid with gasoline engine:** the fuel filler flap opens automatically after the fuel tank has been bled (→ page 273).

- ▶ Press in the center on the back area of fuel filler flap ①.
- ▶ Turn the fuel filler cap counter-clockwise and remove it.
- ▶ Insert fuel filler cap from above into bracket ②.
- ▶ Completely insert the pump nozzle into the tank filler neck, hook in place and refuel.
- ▶ Fill the fuel tank only until the pump nozzle switches off.
- ▶ Replace the cap on the filler neck and turn clockwise until it engages audibly.
- ▶ Close fuel filler flap ①.

Checking the tire pressure manually

- ▶ Read the tire pressure recommended for the current operating conditions from the tire and loading information placard or the tire pressure table. Observe the notes on tire pressure.
- ▶ Remove the valve cap of the tire to be checked.
- ▶ Press the tire pressure gauge securely onto the valve.
- ▶ Read the tire pressure.
- ▶ If the tire pressure is lower than the recommended value, increase the tire pressure to the recommended value.
- ▶ If the tire pressure is higher than the recommended value, release air. To do so, press down the metal pin in the valve, e.g. using the tip of a pen. Then check the tire pressure again using the tire pressure gauge.
- ▶ Screw the valve cap onto the valve.

Refilling the windshield washer system

⚠ **DANGER** Risk of fatal injuries when carrying out maintenance work during the charging process

During the charging process, the high-voltage on-board electrical system is under high voltage.

- ▶ Do not perform any maintenance work during the charging process.

WARNING Risk of burns when opening the hood

If you open the hood in the event of an overheated engine or fire in the engine compartment, the following situations may occur:

- You may come into contact with hot gases.
- You may come into contact with other escaping hot operating fluids.

▶ Before opening the hood, allow the engine to cool down.

▶ In the event of a fire in the engine compartment, keep the hood closed and call the fire service.

WARNING Risk of injury due to moving parts

Components in the engine compartment may continue to run or start unexpectedly even when the drive system is switched off.

Observe the following if you must open the hood:

▶ Switch off the vehicle.

▶ Never touch the danger zones surrounding moving components, e.g. the rotation area of the fan.

▶ Remove jewelery and watches.

▶ Keep items of clothing and hair away from moving parts.

WARNING Risk of burns from hot component parts in the engine compartment

Certain component parts in the engine compartment can be very hot, e.g. the engine, the cooler and parts of the exhaust system.

▶ Allow the engine to cool down and only touch component parts described in the following.

WARNING - Risk of fire and injury from windshield washer concentrate

Windshield washer concentrate is highly flammable. It could ignite if it comes into contact with hot engine component parts or the exhaust system.

▶ Make sure that no windshield washer concentrate spills out next to the filler opening.

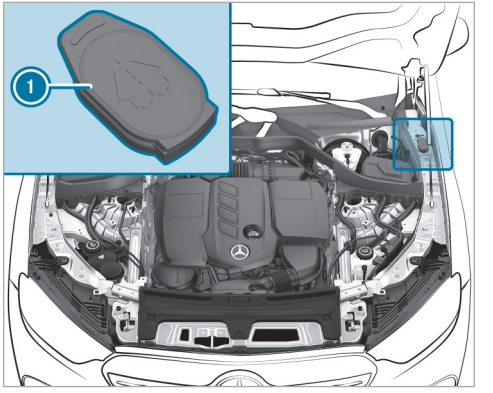

▶ Open cap (1) by the tab.

▶ Add washer fluid.

Changing the windshield wiper blades

⚠ **WARNING** Risk of becoming trapped if the windshield wipers are switched on while wiper blades are being replaced

If the windshield wipers begin to move while you are changing the wiper blades, you can be trapped by the wiper arm.

▶ Always switch off the windshield wipers and vehicle before changing the wiper blades.

Moving the wiper arms into the replacement position

▶ Switch the vehicle on and then off again immediately.

▶ Within around 15 seconds, press the button on the combination switch for approximately three seconds (→ page 204).
The wiper arms will move into the replacement position.

ⓘ Depending on the production period of the vehicle, different variants of the wiper blades will have been installed.

Removing the wiper blades (variant 1)

▶ Fold the wiper arms away from the windshield.

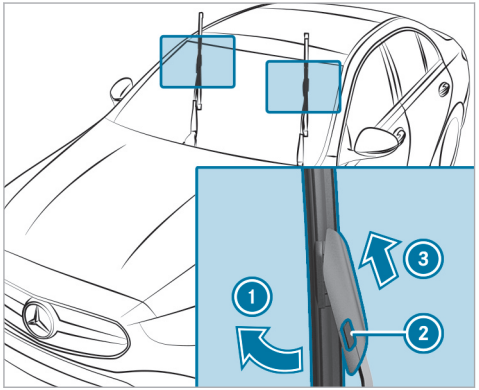

▶ Hold the wiper arm with one hand. With the other hand, turn the wiper blade away from the wiper arm in the direction of arrow ① as far as it will go.

▶ Press release knob ②.

▶ Remove the wiper blade in the direction of arrow ③ away from the wiper arm.

Removing the wiper blades (variant 2)

▶ Fold the wiper arms away from the windshield.

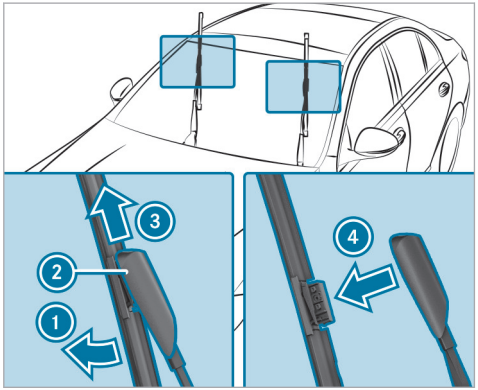

▶ Hold the wiper arm with one hand. With the other hand, turn the wiper blade away from

the wiper arm in the direction of arrow ① as far as it will go.

- Slide catch ② in the direction of arrow ③ until it engages in the removal position.
- Remove the wiper blade from the wiper arm in the direction of arrow ④.

Installing the wiper blades (variant 1)

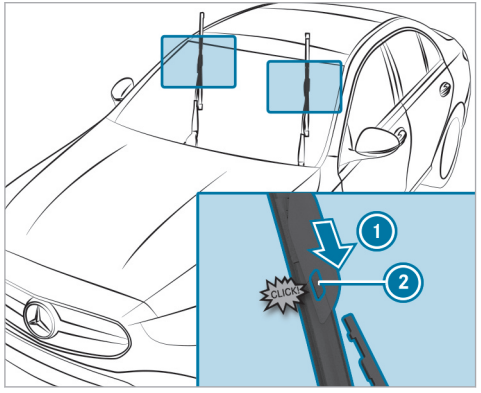

- Insert the new wiper blade in to the wiper arm in the direction of arrow ① until release knob ② engages.
- Make sure that the wiper blade is seated correctly.
- Fold the wiper arms back onto the windshield.
- Switch on the vehicle.
- Press the button on the combination switch.
  The wiper arms will return to their original positions.
- Switch off the vehicle.

Installing the wiper blades (variant 2)

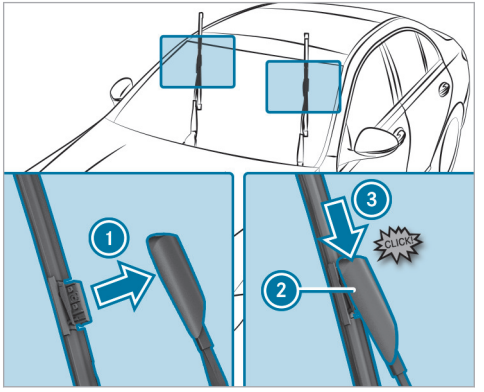

- Insert the new wiper blade into the wiper arm in the direction of arrow ①.
- Slide catch ② in the direction of arrow ③ until it engages in the locking position.
- Make sure that the wiper blade is seated correctly.
- Fold the wiper arms back onto the windshield.

- Switch on the vehicle.
- Press the button on the combination switch.
  The wiper arms will return to their original positions.
- Switch off the vehicle.

Maintenance display

A maintenance display can be found at the tip of the blade on the newly installed wiper blades.

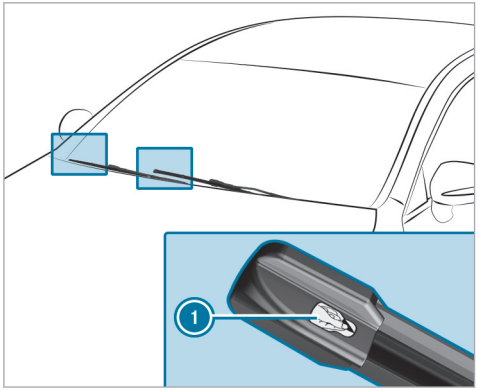

- Remove protective film (1) from the maintenance display.

When the color of the maintenance displays changes from black to yellow, you should replace the wiper blades.

Checking the engine oil level using the driver's display

Requirements

- The engine has been warmed up.
- The vehicle is parked on a level surface.
- The engine is running at idle speed.
- The hood is closed.

Determining the engine oil level can take up to 30 minutes with a normal driving style and even longer with an active driving style.

Driver's display:

→ Service

The engine oil level is shown.

One of the following messages will appear on the driver's display:

- Engine Oil Level Measuring Now...: the engine oil level cannot be determined yet.

- Repeat the request after a maximum of 30 minutes' driving.

- Engine Oil Level OK and the bar display for indicating the engine oil level on the driver's

display is green and is between "min" and "max": the engine oil level is correct.

- Engine Oil Level Refill 1,0 liq.gal. and the bar display for indicating the engine oil level on the driver's display is yellow and is below "min":

▶ Add 1.1 US qt (1 l) of engine oil.

- Engine Oil Level Reduce and the bar display for indicating the engine oil level on the driver's display is yellow and is above "max":

▶ Drain off any excess engine oil that has been added. To do so, consult a qualified specialist workshop.

- For Engine Oil Level Switch on Vehicle

▶ Switch on the vehicle to check the engine oil level.

- Engine Oil Level System Inoperative: The oil level sensor is defective or not connected.

▶ Consult a qualified specialist workshop.

- Engine Oil Level System Currently Unavailable

▶ Close the hood.

Information on washing the vehicle in a car wash

⚠ **WARNING** Risk of accident due to reduced braking effect after washing the vehicle

The braking effect is reduced after washing the vehicle.

▶ After the vehicle has been washed, brake carefully while paying attention to the traffic conditions until the braking effect has been fully restored.

! **NOTE** Damage from automatic braking

If one of the following functions is activated, the vehicle will brake automatically in certain situations:

- Active Brake Assist
- Active Distance Assist DISTRONIC
- HOLD function
- Active Parking Assist

To avoid damage to the vehicle, switch off these systems, e.g. when towing or using a car wash.

! **NOTE** Damage due to unsuitable car wash

▶ Before driving into a car wash make sure that the car wash is suitable for the vehicle dimensions.

▶ Ensure there is sufficient ground clearance between the underbody and the guide rails of the car wash.

▶ Ensure that the clearance width of the car wash, in particular the width of the guide rails, is sufficient.

To avoid damage to your vehicle when using a car wash, ensure the following beforehand:

- Active Distance Assist DISTRONIC is deactivated.
- The HOLD function is switched off.

- The 360° camera or the reversing camera is off.
- The side windows and sliding sunroof are completely closed.
- The outside mirrors are folded in.
- The blower for the ventilation and heating is switched off.
- The windshield wiper switch is in position [0].
- The key is at least 10 ft (3 m) away from the vehicle. Otherwise the tailgate could open unintentionally.
- For car washes with conveyor system:
  - Neutral [N] is engaged.
  - If you would like to leave the vehicle while it is being washed, make sure the key is in the vehicle. The park position [P] is otherwise automatically engaged.

ⓘ Removing the wax from the windshield and wiper rubbers after a car wash will prevent smearing and reduce wiper noise.

Preparing for a holiday

Notes on regularly inspecting wheels and tires

⚠ **WARNING** Risk of injury through damaged tires

Damaged tires can cause tire pressure loss.

▶ Check the tires regularly for signs of damage and replace any damaged tires immediately.

⚠ **WARNING** Risk of hydroplaning due to insufficient tire tread

Insufficient tire tread will result in reduced tire grip.

In heavy rain or slush the risk of hydroplaning is increased, in particular where speed is not adapted to suit the conditions.

▶ Thus, you should regularly check the tread depth and the condition of the tread across the entire width of all tires.

Minimum tread depth for:

- Summer tires: ⅛ in (3 mm)
- M+S tires: ⅙in (4 mm)

▶ For safety reasons, replace the tires before the legally-prescribed limit for the minimum tread depth is reached.

Carry out the following checks on all wheels regularly, at least once a month or as required, for example, prior to a long journey or driving off-road:

- Check the tire pressure (→ page 601).
- Visually inspect wheels and tires for damage.
- Check the valve caps.
- Visually inspect the tire tread depth and the tire contact surface across the entire width.

  The minimum tread depth for summer tires is ⅛ in (3 mm) and for winter tires ⅙ in (4 mm).

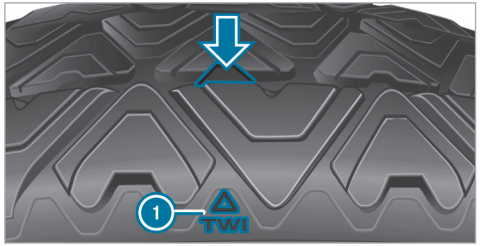

Six marks ① show where the bar indicators (arrow) are integrated into the tire tread. They are visible once a tire tread depth of approximately 1/16 in (1.6 mm) has been reached.

Removing the safety vest

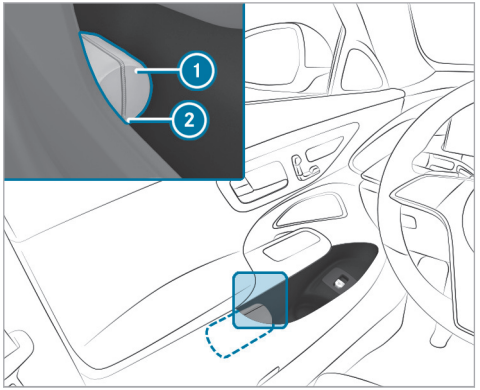

There is a safety vest compartment in the stowage compartments of all doors for storing a safety vest.

- ▶ To remove: pull out safety vest bag ① by loop ②.
- ▶ Open safety vest bag ① and pull out the safety vest.
- ▶ To stow: fold the reflective safety jacket, roll it up and stow it in safety jacket bag ①.
- ▶ Slide safety jacket bag ① along the lower edge of the armrest into the safety jacket compartment. Meanwhile, ensure that loop ② hangs out well within reach.

ⓘ Remove a new reflective safety jacket from its packaging material before sliding it into the safety jacket compartment. The packaging material may otherwise cause it to slip out or make removing it difficult.
Observe the legal requirements in each country.

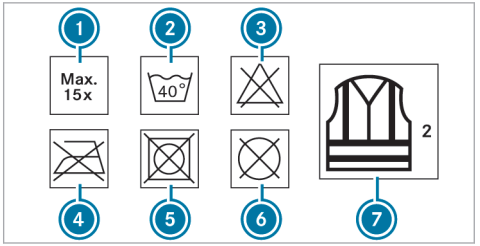

① Maximum number of washes
② Maximum wash temperature
③ Do not bleach

④ Do not iron
⑤ Do not tumble dry
⑥ Do not dry clean
⑦ Class 2 safety vest

The requirements defined by the legal standard are only fulfilled if the safety vest is the correct size and is fully closed.

Replace the safety vest in the following cases:

- The reflective strips are damaged or dirty
- The maximum permissible number of washes is exceeded
- The fluorescence has faded, e.g. due to continuous exposure to sunlight.

Dispose of the safety vest in an environmentally responsible manner:

- To do so, contact your local waste disposal company.

Removing the warning triangle

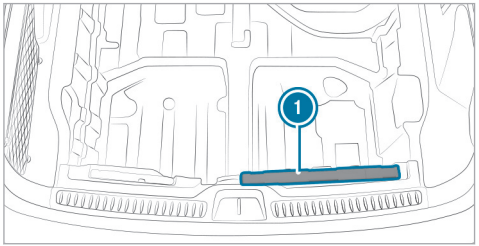

Warning triangle ① is located under the cargo floor in the loading sill when the vehicle is delivered.

▶ Remove warning triangle ①.

First-aid kit (soft-sided) overview

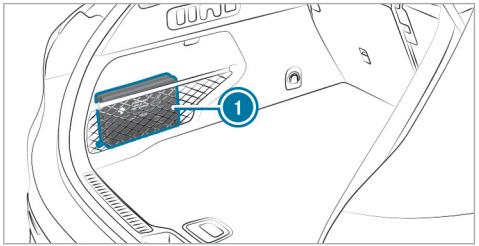

First-aid kit (soft sided) ① is in the cargo compartment in the left-hand stowage net.

Map data update overview

As the content of a digital road map has a short life, outdated data may have a negative effect on all navigation functions. For the best MBUX navigation experience, you should install all of the map updates offered by Mercedes-Benz.

The following options are available for the update of map data:

- Online map update
- Updates from the Mercedes me Portal
- Update at an authorized Mercedes-Benz Center

  Additional costs can be incurred in this process.

Online map update

Requirements:

- Mercedes me connect is available.
- You have a Mercedes me user account.
- The Online Map Update service is available for your region.
- The service has been activated.

Installation takes place in the background as an automatic map update.

The MBUX multimedia system installs all of the available map updates for the North American regions in which the vehicle is located or is moved.

The online map update is activated at the latest after the next time the vehicle is switched on.

Updates from the Mercedes me Portal

The map data for several regions can also be updated manually. Log in with your Mercedes me user account at: https://www.mercedes-benz.de/

Follow the menu path My Mercedes Me account > My vehicles > Selection of car > Online Map Update. Select the regions to be downloaded to a storage medium.

After the map data has been copied, connect the storage medium with your vehicle. Select the notification with information about a new version of the map data and start the installation. After the MBUX multimedia system has been restarted, the updated map data is used.

Entering a POI or address

Requirements:

- For the online search:
  - There is an Internet connection.
  - Mercedes me connect is available.
  - You have set up a user account in the Mercedes me Portal.
  - The vehicle is connected with the user account and you have accepted the terms of use.
  - Further information can be found at: https://www.mercedes.me
  - The service is available.
  - The service has been activated at an authorized Mercedes-Benz Center.

ⓘ If Online Search is not available, the search is performed using the data of the digital map.

Multimedia system:

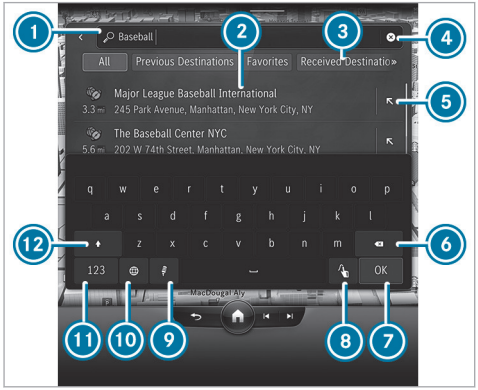

Example: entering a POI or address

1. Input line with current entry
2. Search result
3. Selects destination search, displays further destination searches with double arrow
4. Deletes an entry
5. Adopts the search result in the input line and continues the search
6. Deletes the last character entered
7. Hides the keypad
8. Switches to handwriting recognition (→ page 441)
9. Starts the MBUX voice assistant (→ page 412)
10. Sets the written language
11. Switches to digits and special characters
12. Switches to upper-case or lower-case letters

▶ Enter a destination. The entries can be made in any order.
The search results are displayed in a list.

ⓘ Online search results for POIs may contain additional information, for example opening times and ratings. The information is provided by an online map service.
This online function is not available in all countries.

The following entries can be made, for example in ①:

- City, street, house number or street, city
- Zip code
- POI name or POI category, e.g. Restaurants
- City, POI name
- Contact name
- Geo-coordinates (→ page 465)
- Three-word addresses from what3words (→ page 466)

  Entering three-word addresses is possible in the online search .

▶ Hide the keyboard with OK.

▶ Select the destination in the list.
The following menu shows the selected destination with the address information and a corresponding map section.

The menu enables the route to be calculated.

Searching for radio stations using station names or frequency entry

Multimedia system:

→ [⌂] ▸▸ [♪] Radio

- ▶ Select [🔍].
- ▶ Enter a station name or frequency.
- ▶ Select a station.

Luggage and loading

Attaching a roof luggage rack

⚠ WARNING Risk of accident due to exceeding the maximum roof load

The vehicle center of gravity and the usual driving characteristics as well as the steering and braking characteristics alter.

If you exceed the maximum roof load, the driving characteristics, as well as steering and braking, will be greatly impaired.

- ▶ Never exceed the maximum roof load and adjust your driving style.

Vehicle-specific weight information can be found on the vehicle identification plate.

! NOTE Vehicle damage due to failure to observe the maximum permissible clearance height

If the vehicle height exceeds the maximum permissible clearance height, the roof and other vehicle parts may be damaged.

- ▶ Please observe the maximum clearance height indicated.
- ▶ If the vehicle exceeds the permissible clearance height, do not drive in.
- ▶ Take the modified vehicle height into account in the case of roof superstructures or other carrier systems.

! NOTE Damage to the panorama roof with power tilt/sliding panel due to non-approved roof luggage racks

The panorama roof with power tilt/sliding panel may be damaged by the roof luggage rack if you attempt to open it when using a roof luggage rack not tested and approved for Mercedes-Benz.

- ▶ When a roof luggage rack is installed, open the panorama roof with power tilt/sliding panel only if this has been tested and approved for Mercedes-Benz.

The panorama roof with power tilt/sliding panel may be raised to allow ventilation of the vehicle interior.

- ▶ Secure the roof luggage rack to the roof railing.
- ▶ Observe the manufacturer's installation instructions.

Folding the rear seat backrests forward

⚠ WARNING Risk of becoming trapped when adjusting the seats

When you adjust a seat, you may trap yourself or a vehicle occupant.

▶ When adjusting a seat, make sure that no one has any body parts in the sweep of the seat.

⚠ **WARNING** Risk of an accident because the seat backrest is not engaged

The seat backrest may fold forwards.

There is a risk of the following, in particular:

- The vehicle occupant may be pressed against the seat belt. The seat belt cannot protect as intended and could cause additional injury.
- A child restraint system is no longer properly supported or properly positioned and may no longer fulfill its function as intended.
- The seat backrest cannot restrain objects or goods in the trunk or cargo compartment.

Always ensure that the seat backrest is engaged, especially:

- After the seat has been adjusted.
- After the cargo compartment enlargement has been folded forwards

Prior to use, make sure that the red marking of the lock verification indicator is no longer visible. Otherwise, the seat backrest is not locked.

Always ensure that all vehicle occupants have their seat belts fastened correctly and are sitting properly. Particular attention must be paid to children.

Requirements

- The rear seat backrest head restraints are fully inserted.
- The rear armrest has been folded up.

If you no longer require the folded-down rear seat backrest as a load area, fold the backrest back into place.

▶ Ensure that the center seat backrest is in an upright position and locked to the left seat backrest (→ page 178).

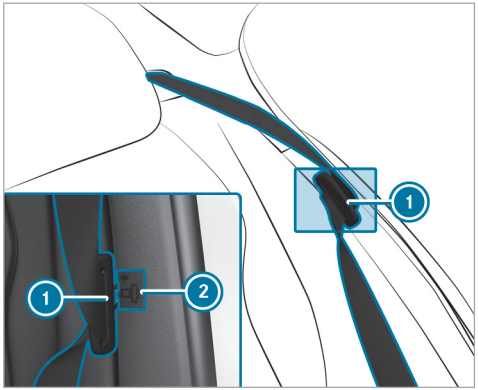

▶ Press the seat belt tongue of seat belt ① into marked position ②.

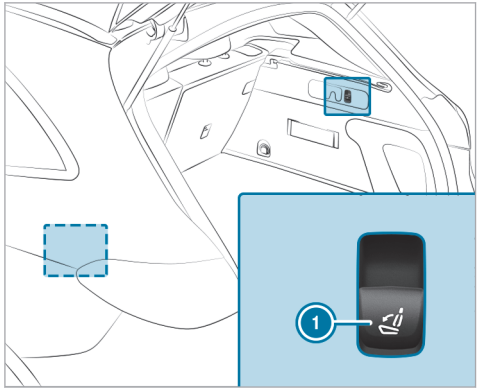

▶ **To fold the left seat backrest forward:** briefly pull left button ①.
The left and center seat backrests fold forwards.

If the left seat backrest is not locked with the center seat backrest, this will be shown on the driver display.

▶ **To fold the right seat backrest forward:** briefly pull right button ①.
The right seat backrest will fold forwards.

Folding the rear seat backrest back

⚠ **WARNING** Risk of becoming trapped when adjusting the seats

When you adjust a seat, you may trap yourself or a vehicle occupant.

▶ When adjusting a seat, make sure that no one has any body parts in the sweep of the seat.

⚠ **WARNING** Risk of an accident because the seat backrest is not engaged

The seat backrest may fold forwards.

There is a risk of the following, in particular:

- The vehicle occupant may be pressed against the seat belt. The seat belt cannot protect as intended and could cause additional injury.
- A child restraint system is no longer properly supported or properly positioned and may no longer fulfill its function as intended.
- The seat backrest cannot restrain objects or goods in the trunk or cargo compartment.

Always ensure that the seat backrest is engaged, especially:

- After the seat has been adjusted.
- After the cargo compartment enlargement has been folded forwards

Make sure that the red marking of the lock verification indicator is no longer visible. Otherwise, the seat backrest is not locked.

Always ensure that all vehicle occupants have their seat belts fastened correctly and are sitting properly. Particular attention must be paid to children.

NOTE Damage caused by trapping the seat belt when folding back the seat backrest

The seat belt could become trapped and thus damaged when the seat backrest is folded back.

- Make sure that the seat belt is not trapped when folding back the seat backrest.

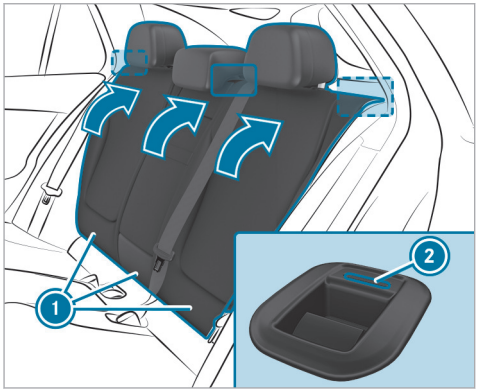

- Move the driver's or front passenger seat forwards, if necessary.
- Swivel seat backrest ① back until it engages. If the seat backrest is not engaged and locked in place, red lock verification indicator ② will be visible.

Overview of the tie-down eyes

Observe the notes on loading the vehicle (→ page 170).

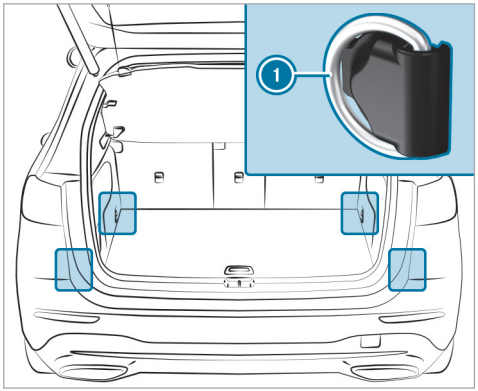

① Tie-down eyes

Overview of the front storage compartments

WARNING Risk of injury due to objects being stowed incorrectly

If objects in the vehicle interior are stowed incorrectly, they can slide or be thrown around

and hit vehicle occupants. In addition, cup holders, open storage spaces and mobile phone brackets cannot always retain all objects they contain.

There is a risk of injury, particularly in the event of sudden braking or a sudden change in direction.

- ▶ Always stow objects in such a way that they cannot be thrown around in such situations.
- ▶ Always make sure that objects do not protrude from storage spaces, parcel nets or storage nets.
- ▶ Close the lockable storage spaces before starting a journey.
- ▶ Always stow and secure heavy, hard, pointed, sharp-edged, fragile or bulky objects in the trunk.

Observe the notes on loading the vehicle.

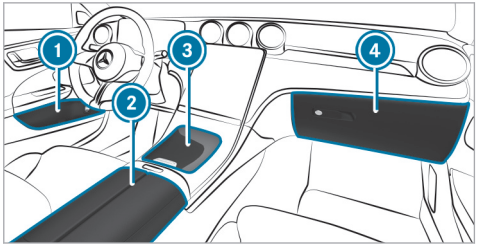

1. Stowage spaces in the doors
2. Storage compartment under the armrest with multimedia and USB ports
3. Storage compartment in the front center console with cup holders, USB ports and charging module for wireless charging of mobile phones
4. Glove box

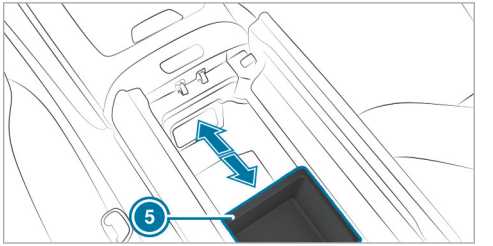

Under armrest 2 there is also a sliding storage compartment 5, which can be used in the front or rear position. Push the compartment to the desired position until it engages.

For cleaning, the storage compartment can be moved to the middle position and removed. The rubber mat in the storage compartment can be removed for cleaning.

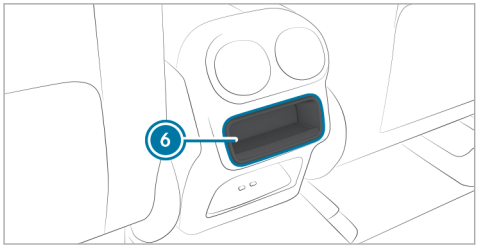

Depending on the vehicle version, there is a storage compartment in the rear center console 6. The rubber mat in the storage compartment can be removed for cleaning.

Locking/unlocking the glove box

⚠ **WARNING** Risk of injury due to objects being stowed incorrectly

If objects in the vehicle interior are stowed incorrectly, they can slide or be thrown around and hit vehicle occupants. In addition, cup holders, open storage spaces and mobile phone brackets cannot always retain all objects they contain.

There is a risk of injury, particularly in the event of sudden braking or a sudden change in direction.

- ▶ Always stow objects in such a way that they cannot be thrown around in such situations.
- ▶ Always make sure that objects do not protrude from storage spaces, parcel nets or storage nets.
- ▶ Close the lockable storage spaces before starting a journey.
- ▶ Always stow and secure heavy, hard, pointed, sharp-edged, fragile or bulky objects in the trunk.

Observe the notes on loading the vehicle.

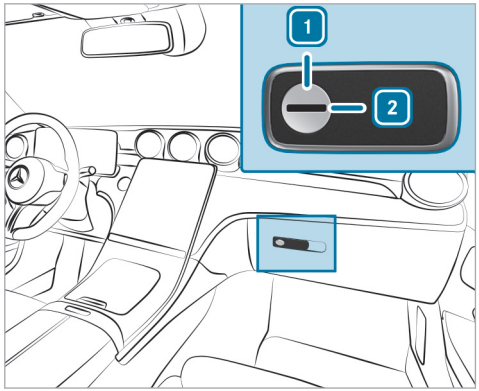

- ▶ Turn the emergency key a quarter turn clockwise [2] (to lock) or counter-clockwise [1] (to unlock).

Ice and snow

Notes on regularly inspecting wheels and tires

WARNING Risk of injury through damaged tires

Damaged tires can cause tire pressure loss.

▶ Check the tires regularly for signs of damage and replace any damaged tires immediately.

WARNING Risk of hydroplaning due to insufficient tire tread

Insufficient tire tread will result in reduced tire grip.

In heavy rain or slush the risk of hydroplaning is increased, in particular where speed is not adapted to suit the conditions.

▶ Thus, you should regularly check the tread depth and the condition of the tread across the entire width of all tires.

Minimum tread depth for:

- Summer tires: ⅛ in (3 mm)
- M+S tires: ⅙ in (4 mm)

▶ For safety reasons, replace the tires before the legally-prescribed limit for the minimum tread depth is reached.

Carry out the following checks on all wheels regularly, at least once a month or as required, for example, prior to a long journey or driving off-road:

- Check the tire pressure (→ page 601).
- Visually inspect wheels and tires for damage.
- Check the valve caps.
- Visually inspect the tire tread depth and the tire contact surface across the entire width.

  The minimum tread depth for summer tires is ⅛ in (3 mm) and for winter tires ⅙ in (4 mm).

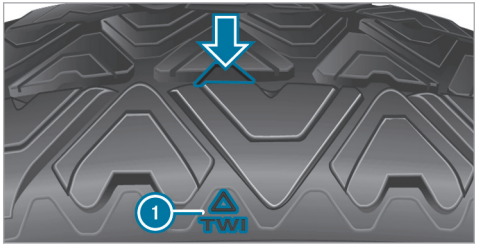

Six marks (1) show where the bar indicators (arrow) are integrated into the tire tread. They are visible once a tire tread depth of approximately 1⁄16 in (1.6 mm) has been reached.

Notes on snow chains

WARNING Risk of accident due to incorrectly installed snow chains

If you have installed snow chains on the front wheels, they may drag against the vehicle body or chassis components.

▶ Never install snow chains on the front wheels.

▶ Only install snow chains on the rear wheels in pairs.

NOTE Damage to components of the vehicle body or chassis due to mounted snow chains

If you mount snow chains to the front wheels of 4MATIC vehicles, you may damage components of the vehicle body or chassis.

▶ Only mount snow chains to the rear wheels of 4MATIC vehicles.

Observe the following notes when using snow chains:

- Snow chains are only permissible for certain wheel/tire combinations. You can obtain information about this from a Mercedes-Benz Service Center.
- For safety reasons, only use snow chains that have been specifically approved for your vehicle by Mercedes-Benz, or snow chains with the same quality standard.
- Comply with the installation instructions of the snow chain manufacturer.
- If snow chains are fitted, the maximum permissible speed is 30 mph (50 km/h).
- **Vehicles with Active Parking Assist:** do not use Active Parking Assist when snow chains are fitted.

ⓘ You can deactivate ESP® to pull away (→ page 310). This allows the wheels to spin, achieving increased tractive power.

Notes on windshield washer fluid

Observe the notes on operating fluids (→ page 757).

WARNING - Risk of fire and injury from windshield washer concentrate

Windshield washer concentrate is highly flammable. It could ignite if it comes into contact with hot engine component parts or the exhaust system.

▶ Make sure that no windshield washer concentrate spills out next to the filler opening.

NOTE Damage to the exterior lighting due to unsuitable windshield washer fluid

Unsuitable windshield washer fluid may damage the plastic surface of the exterior lighting.

▶ Only use windshield washer fluid which is also suitable for use on plastic surfaces, e.g. MB SummerFit or MB WinterFit.

NOTE Blocked spray nozzles caused by mixing windshield washer fluids

▶ Do not mix MB SummerFit and MB WinterFit with other windshield washer fluids.

Do not use distilled or de-ionised water. Otherwise, the fill level sensor may be triggered erroneously.

Recommended windshield washer fluid:

- Above freezing point: e.g. MB SummerFit
- Below freezing point: e.g. MB WinterFit

For the correct mixing ratio, refer to the information on the antifreeze container.

Mix washing water with windshield washer fluid all year round.

Refilling the windshield washer system

DANGER Risk of fatal injuries when carrying out maintenance work during the charging process

During the charging process, the high-voltage on-board electrical system is under high voltage.

▶ Do not perform any maintenance work during the charging process.

WARNING Risk of burns when opening the hood

If you open the hood in the event of an overheated engine or fire in the engine compartment, the following situations may occur:

- You may come into contact with hot gases.
- You may come into contact with other escaping hot operating fluids.

▶ Before opening the hood, allow the engine to cool down.

▶ In the event of a fire in the engine compartment, keep the hood closed and call the fire service.

WARNING Risk of injury due to moving parts

Components in the engine compartment may continue to run or start unexpectedly even when the drive system is switched off.

Observe the following if you must open the hood:

▶ Switch off the vehicle.

▶ Never touch the danger zones surrounding moving components, e.g. the rotation area of the fan.

▶ Remove jewelery and watches.

▶ Keep items of clothing and hair away from moving parts.

WARNING Risk of burns from hot component parts in the engine compartment

Certain component parts in the engine compartment can be very hot, e.g. the engine, the cooler and parts of the exhaust system.

▶ Allow the engine to cool down and only touch component parts described in the following.

WARNING - Risk of fire and injury from windshield washer concentrate

Windshield washer concentrate is highly flammable. It could ignite if it comes into contact

with hot engine component parts or the exhaust system.

- Make sure that no windshield washer concentrate spills out next to the filler opening.

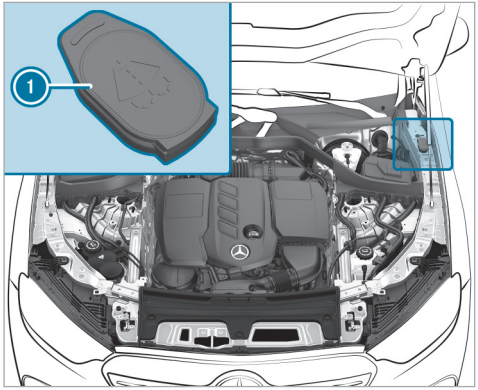

- Open cap 1 by the tab.
- Add washer fluid.

Changing the windshield wiper blades

WARNING Risk of becoming trapped if the windshield wipers are switched on while wiper blades are being replaced

If the windshield wipers begin to move while you are changing the wiper blades, you can be trapped by the wiper arm.

- Always switch off the windshield wipers and vehicle before changing the wiper blades.

Moving the wiper arms into the replacement position

- Switch the vehicle on and then off again immediately.
- Within around 15 seconds, press the button on the combination switch for approximately three seconds (→ page 204).
  The wiper arms will move into the replacement position.

ⓘ Depending on the production period of the vehicle, different variants of the wiper blades will have been installed.

Removing the wiper blades (variant 1)

- Fold the wiper arms away from the windshield.

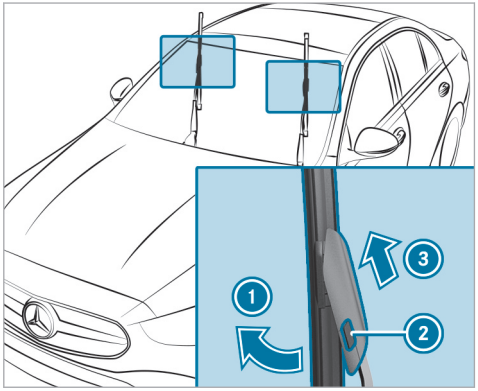

- Hold the wiper arm with one hand. With the other hand, turn the wiper blade away from the wiper arm in the direction of arrow 1 as far as it will go.
- Press release knob 2.

- Remove the wiper blade in the direction of arrow ③ away from the wiper arm.

Removing the wiper blades (variant 2)

- Fold the wiper arms away from the windshield.

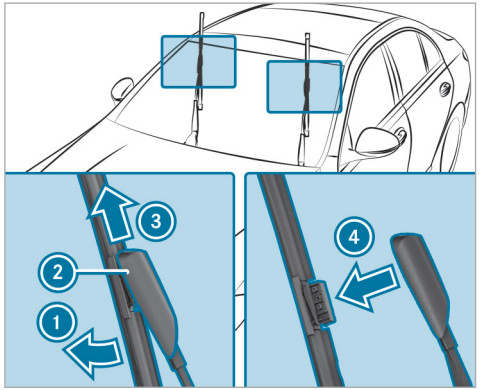

- Hold the wiper arm with one hand. With the other hand, turn the wiper blade away from the wiper arm in the direction of arrow ① as far as it will go.
- Slide catch ② in the direction of arrow ③ until it engages in the removal position.
- Remove the wiper blade from the wiper arm in the direction of arrow ④.

Installing the wiper blades (variant 1)

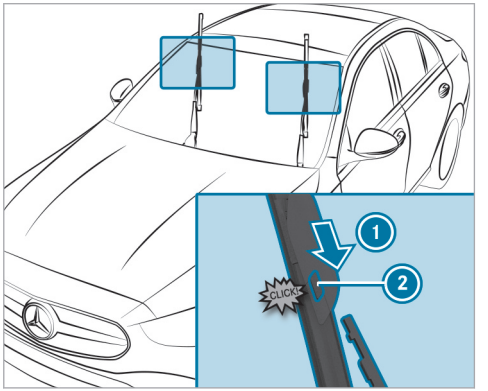

- Insert the new wiper blade in to the wiper arm in the direction of arrow ① until release knob ② engages.
- Make sure that the wiper blade is seated correctly.
- Fold the wiper arms back onto the windshield.
- Switch on the vehicle.
- Press the button on the combination switch.
  The wiper arms will return to their original positions.
- Switch off the vehicle.

Installing the wiper blades (variant 2)

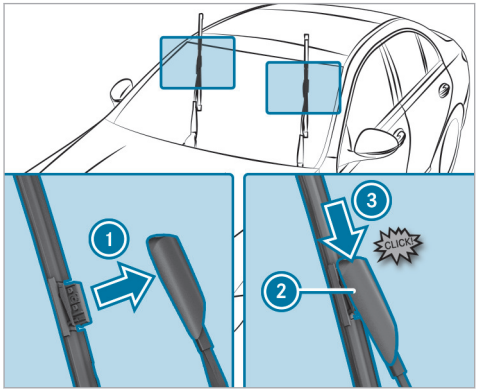

- Insert the new wiper blade into the wiper arm in the direction of arrow 1.
- Slide catch 2 in the direction of arrow 3 until it engages in the locking position.
- Make sure that the wiper blade is seated correctly.
- Fold the wiper arms back onto the windshield.

- Switch on the vehicle.
- Press the button on the combination switch.
  The wiper arms will return to their original positions.
- Switch off the vehicle.

Maintenance display

A maintenance display can be found at the tip of the blade on the newly installed wiper blades.

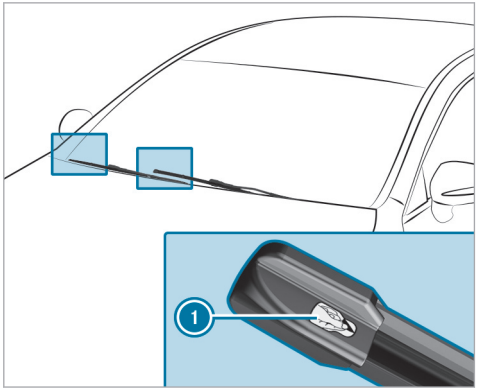

- Remove protective film 1 from the maintenance display.

When the color of the maintenance displays changes from black to yellow, you should replace the wiper blades.

Help in the event of a breakdown

Activating/deactivating the hazard warning lights

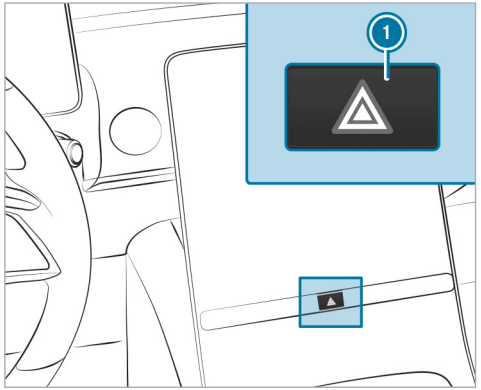

▶ Press button ①.

The hazard warning lights will switch on automatically if:

- the air bag has been deployed.

Removing the safety vest

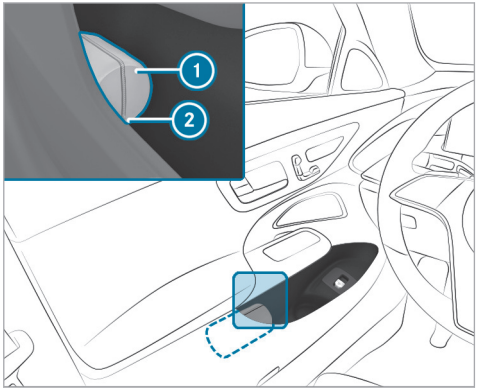

There is a safety vest compartment in the stowage compartments of all doors for storing a safety vest.

▶ To remove: pull out safety vest bag ① by loop ②.

▶ Open safety vest bag ① and pull out the safety vest.

▶ To stow: fold the reflective safety jacket, roll it up and stow it in safety jacket bag ①.

▶ Slide safety jacket bag ① along the lower edge of the armrest into the safety jacket compartment. Meanwhile, ensure that loop ② hangs out well within reach.

ⓘ Remove a new reflective safety jacket from its packaging material before sliding it into the safety jacket compartment. The packaging material may otherwise cause it to slip out or make removing it difficult.
Observe the legal requirements in each country.

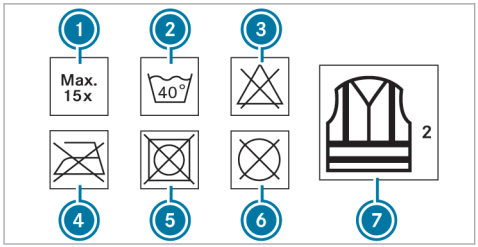

1. Maximum number of washes
2. Maximum wash temperature
3. Do not bleach
4. Do not iron
5. Do not tumble dry
6. Do not dry clean
7. Class 2 safety vest

The requirements defined by the legal standard are only fulfilled if the safety vest is the correct size and is fully closed.

Replace the safety vest in the following cases:

- The reflective strips are damaged or dirty
- The maximum permissible number of washes is exceeded
- The fluorescence has faded, e.g. due to continuous exposure to sunlight.

Dispose of the safety vest in an environmentally responsible manner:

- To do so, contact your local waste disposal company.

Removing the warning triangle

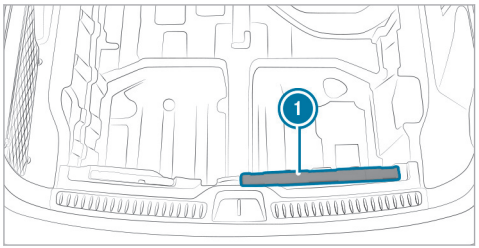

Warning triangle 1 is located under the cargo floor in the loading sill when the vehicle is delivered.

F254 0138 13

▶ Remove warning triangle 1.

First-aid kit (soft-sided) overview

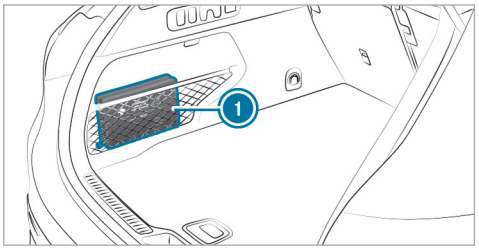

First-aid kit (soft sided) 1 is in the cargo compartment in the left-hand stowage net.

QR code for rescue card

QR codes are attached in the fuel filler flap and on the opposite side on the B-pillar. In the event of an accident, rescue services can use the QR code to quickly find the appropriate rescue card for your vehicle. The current rescue card contains the

most important information about your vehicle (e.g. the routing of the electric lines) in compact form.

Further information can be obtained at https://www.mercedes-benz.de/qr-code

Starting assistance and charging the 12 V battery

Preparing starting assistance/charging

- ▶ Secure the vehicle by applying the electric parking brake.
- ▶ Shift the transmission to position P.
- ▶ Switch off the vehicle and all electrical consumers.
- ▶ Open the hood.

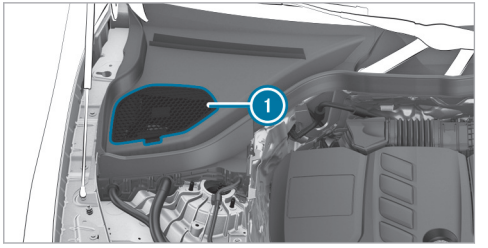

- ▶ Open cover 1 of the jump-start connection point.

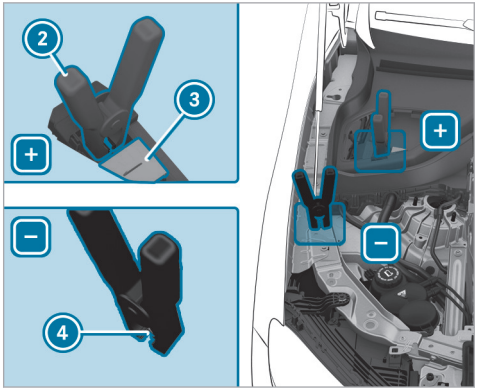

- ▶ Open cover 3 of positive contact 2 on the jump-start connection point.

Starting assistance

- ▶ Connect positive terminal 2 on your vehicle to positive terminal of the donor battery using the jumper cable. Always begin with positive clamp 2 on your own vehicle first.

- ▶ Start the engine of the donor vehicle and run it at idling speed.
- ▶ Connect the negative terminal of the donor battery to ground point ④ of your vehicle using the jumper cable. Begin with the donor battery first.
- ▶ Start the engine of your own vehicle.
- ▶ Let the engines run for several minutes.
- ▶ Before disconnecting the jumper cables, switch on an electrical consumer in your own vehicle, e.g. the rear window defroster or the lighting.

When the starting assistance procedure is complete:

- ▶ Remove the jumper cables from ground point ④ first and the negative terminal of the donor battery, then from positive contact ② and the positive terminal of the donor battery. Begin each time with the contacts on your own vehicle first.
- ▶ Close cover ③ of positive terminal ② after removing the jumper cables.
- ▶ Close cover ①.

If your vehicle has been started with starting assistance, it may not be possible to use the electric drive for approximately 30 minutes.

Further information can be obtained at a qualified specialist workshop.

Charging

- ▶ Connect positive contact ② on the vehicle to the positive terminal of the charger using the charging cable. Always begin with positive contact ② on the vehicle.
- ▶ Connect the negative terminal of the charger and ground point ④ on the vehicle with the charging cable. Start with the charger.
- ▶ Start the charging process.

When the charging process is complete:

- ▶ Remove the charging cable from ground point ④ first and the negative terminal of the charger, then from positive contact ② and the positive terminal of the charger. Begin each time with the contacts on the vehicle.
- ▶ After removing the charging cable, close cover ③ of positive contact ②.
- ▶ Close cover ①.

Further information can be obtained at a qualified specialist workshop.

Notes on electrical fuses

⚠ WARNING Risk of accident and injury due to overloaded lines

If you manipulate or bridge a faulty fuse or if you replace it with a fuse with a higher amperage, the electric line could be overloaded.

This could result in a fire.

- ▶ Always replace faulty fuses with specified new fuses containing the correct amperage.

! NOTE Damage due to incorrect fuses

Using incorrect fuses can result in damage to electrical components or systems or their functions being considerably restricted.

▶ Use only fuses approved for Mercedes-Benz with the respective specified fuse rating.

Blown fuses must be replaced with fuses of the same rating, which you can recognize by the color and the label. The fuse ratings and further information to be observed can be found in the fuse assignment diagram.

Fuse assignment diagram: on the fuse box in the cargo compartment (→ page 599).

! NOTE Damage or malfunctions caused by moisture

Moisture may cause damage to the electrical system or cause it to malfunction.

▶ When the fuse box is open, make sure that no moisture can enter the fuse box.

▶ When closing the fuse box, make sure that the seal of the lid is positioned correctly on the fuse box.

If the newly inserted fuse also blows, have the cause traced and rectified at a qualified specialist workshop.

Ensure the following before replacing a fuse:

- The vehicle is secured against rolling away.
- All electrical consumers are switched off.
- The vehicle is switched off.

The fuses are located in various fuse boxes:

- Fuse box in the engine compartment on the driver's side (→ page 597)
- Fuse box on the driver's side of the cockpit (→ page 598)
- Fuse box in the front-passenger footwell (→ page 599)
- Fuse box in the cargo compartment (→ page 599)

Notes on flat tires

⚠ WARNING Risk of accident due to a flat tire

A flat tire severely affects the driving characteristics as well as steering and braking.

Tires without run-flat characteristics:

▶ Do not drive on with a flat tire.

▶ Change the flat tire immediately with an emergency spare wheel or spare wheel. Alternatively, consult a qualified specialist workshop.

Tires with run-flat characteristics:

▶ Observe the information and warning notes on MOExtended tires (run-flat tires).

In the event of a flat tire, you have the following options depending on your vehicle's equipment:

- **Vehicles with MOExtended tires:** it is possible to continue your journey for a short period of time. Make sure you observe the notes on

MOExtended tires (run-flat tires) (→ page 577).

- **Vehicles with a TIREFIT kit:** you can seal the tire so that it is possible to continue your journey for a short period of time. To do this, use the TIREFIT kit (→ page 579).
- **Vehicles with Mercedes me connect:** you can make a call for breakdown assistance via the overhead control panel in the case of a breakdown (→ page 521).
- **All vehicles:** change the wheel (→ page 624).

ⓘ The emergency spare wheel is available only in certain countries (→ page 630).
Vehicles equipped with MOExtended tires are not equipped with a TIREFIT kit at the factory. It is therefore recommended that you additionally equip your vehicle with a TIREFIT kit if you mount tires on your vehicle that do not feature run-flat characteristics, e.g. winter tires. A TIREFIT kit may be obtained from a qualified specialist workshop.
Vehicles with a Mercedes-Benz emergency call system that are not equipped with a TIREFIT kit: in the event of a flat tire, contact the Customer Assistance Center for the Mercedes-Benz emergency call system .

Overview of the tire-change tool kit

With the exception of some country-specific variants, vehicles are not equipped with a tire-change tool kit. For more information on which tire-changing tools are required and approved for performing a wheel change on your vehicle, consult a qualified specialist workshop.

Required tire-change tool kit may include, forexample:

- Jack
- Chock
- Lug wrench
- Alignment bolt

The tire-change tool kit ① is located under the cargo floor.

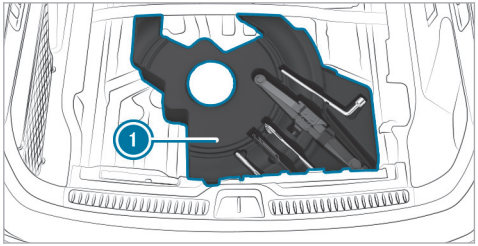

The tire-change tool kit includes the following:

- Jack
- Lug wrench
- Wheel studs
- Where applicable, extension piece for wheel studs (depending on vehicle version)
- Folding chock
- Ratchet wrench
- Alignment bolt

TIREFIT kit storage location

Plug-in hybrid

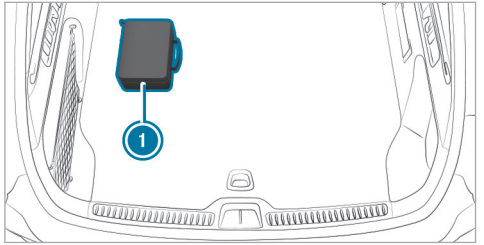

The TIREFIT kit ① is located on the left-hand side of the cargo compartment in the as-delivered condition.

Not plug-in hybrid

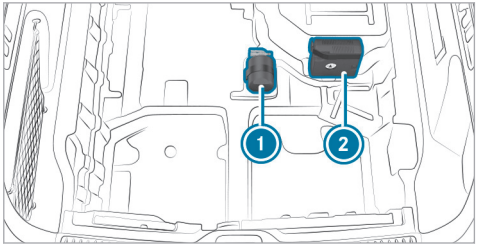

① Tire sealant bottle
② Tire inflation compressor

The TIREFIT kit is located under the cargo floor in the as-delivered condition.

Depending on the vehicle version, the TIREFIT kit may be located in a different position in the cargo compartment.

ⓘ Depending on the power category (LK), the tire inflation compressor weighs as follows:

- LK1 – 12 V/10 A, 120 W, 1.8 lbs (0.8 kg)
- LK2 – 12 V/15 A, 180 W, 2 lbs (0.9 kg)

You can find information on the power category (LK) and/or electrical data on the back of the tire inflation compressor.
The tire inflation compressor is maintenance-free. In the event of a malfunction, please contact a qualified specialist workshop.

Towing the vehicle with both axles on the ground

▶ Observe the notes on the permitted towing methods.

▶ Make sure that the battery is connected and charged.

Observe the following points when the battery is discharged:

- the vehicle cannot be started.
- the electric parking brake cannot be released or applied
- **Vehicles with automatic transmission:** the transmission cannot be shifted to position N or P.

ⓘ **Vehicles with automatic transmission:** if the transmission cannot be shifted to position N or if the display does not show anything, transport the vehicle (→ page 594). A towing vehicle with lifting equipment is required for vehicle transportation.

! NOTE Damage due to towing away at excessively high speeds or over long distances

The drivetrain could be damaged when towing at excessively high speeds or over long distances.

- ▶ A towing speed of 30 mph (50 km/h) must not be exceeded.
- ▶ A towing distance of 30 miles (50 km) must not be exceeded.

⚠ WARNING Risk of accident when towing a vehicle which is too heavy

If the vehicle to be tow-started or towed away is heavier than the permissible gross mass of your vehicle, the following situations can occur:

- The towing eye may become detached.
- The vehicle/trailer combination may swerve or rollover.

▶ Before tow-starting or towing away, check if the vehicle to be tow-started or towed away exceeds the permissible gross mass.

If a vehicle has to be tow-started or towed away, its permissible gross mass must not exceed the permissible gross mass of the towing vehicle.

- ▶ Information on the permissible gross mass of the vehicle can be found on the vehicle identification plate (→ page 756).
- ▶ **Vehicles with automatic transmission:** do not open the driver's door or front passenger door; the transmission otherwise automatically shifts to position P.
- ▶ Install the towing eye (→ page 595).
- ▶ Fasten the towing device.

! NOTE Damage due to incorrect connection of the tow bar

▶ Only connect the tow rope or tow bar to the towing eyes.

- ▶ Deactivate the automatic locking mechanism (→ page 134).
- ▶ Do not activate the HOLD function.
- ▶ Deactivate the tow-away alarm (→ page 150).
- ▶ Deactivate Active Brake Assist (→ page 342).
- ▶ **Vehicles with automatic transmission:** shift to position N.
- ▶ Release the electric parking brake.

WARNING Risk of accident due to limited safety-related functions during the towing process

Safety-related functions are limited or no longer available in the following situations:

- The vehicle is switched off.
- The brake system or power steering system is malfunctioning.
- The energy supply or the on-board electrical system is malfunctioning.

When your vehicle is towed away, significantly more effort may be required to steer and brake than is normally required.

▶ Use a tow bar.

▶ Make sure that the steering wheel can move freely before towing the vehicle away.

NOTE Damage due to excessive tractive power

If you pull away sharply, the tractive power may be too high and the vehicles could be damaged.

▶ Pull away slowly and smoothly.

Expert tips

Additional functions of buttons

Resetting the climate control settings

▶ Press and hold the MENU / MENU REST button on the front control panel for four seconds.
The climate control settings will be reset to the basic settings.

Useful vehicle functions

Notes about the automatically active rear window wiper

The rear window wiper will automatically be active if the following conditions are met at the same time:

- The front windshield wiper is switched on
- Reverse gear is engaged

Storing the parking position of the front-passenger outside mirror using the memory button

Requirements:

- Reverse gear has not been engaged.

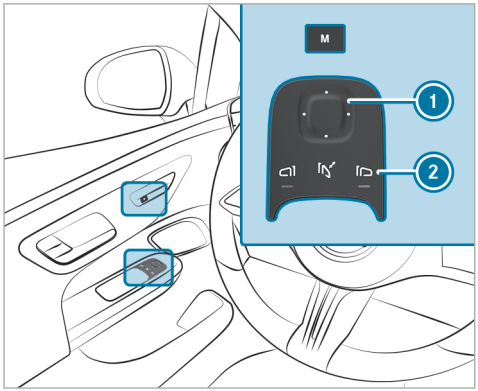

- Use button ② to select the front-passenger outside mirror.
- Move the front-passenger outside mirror into the desired parking position using button ①.
- Press the M button.
- Confirm immediately using button ① to store the setting.

ⓘ No more than three seconds may pass between the M button and button ① being pressed. The mirror adjustment will be canceled after three seconds.

Tips for on the move

Vehicle conditions for automatic engine stop or start

Conditions for automatic engine stop:

- The ECO start/stop function is switched on.
- The brake system does not require a running engine.
- The atmospheric air pressure is within the range that is suitable for the system.
- The engine is at normal operating temperature.
- Engine diagnostics are not active.
- The transmission oil temperature is within the range that is suitable for the system.
- The temperature in the vehicle interior is within the set range.
- The fuel tank is sufficiently full.
- The system detects that there is no moisture on the windshield when the air conditioning system is switched on.
- The system does not detect a steep gradient.
- The hood is closed.

Conditions for automatic engine start:

- The brake system requires a running engine.
- The atmospheric air pressure has exceeded the range that is suitable for the system.
- Engine diagnostics require a running engine.
- The transmission oil temperature has exceeded the range that is suitable for the system.
- The temperature in the vehicle interior deviates from the set range.
- The system detects moisture on the windshield when the air conditioning system is switched on.

Good to know

Deactivating the function of the key

Vehicles with KEYLESS-GO: if you deactivate the function of the SmartKey, the KEYLESS-GO functions will also be deactivated. Access or drive authorization by KEYLESS-GO will then no longer be possible with that particular SmartKey. Activate the function of the SmartKey so that all its functions will again be available.

You can also deactivate the function of the SmartKey to reduce the energy consumption of the SmartKey if you do not use the vehicle or a SmartKey for an extended period of time.

▶ Press and hold the button on the SmartKey.

▶ With the key button pressed, immediately press key button twice in quick succession.
The indicator light of the key lights up once briefly and once for a long time.

ⓘ The following options for re-activating the SmartKey are available:

- Press any button on the SmartKey.
- Start the vehicle with the SmartKey in the marked space in the center console (→ page 232).

Overview of the Mercedes-Benz emergency call system

eCall can help to reduce the time between an accident and the arrival of emergency services at the site of the accident. It helps locate an accident site in places that are difficult to access. However, even if a vehicle is equipped with eCall, this does not mean the system is ON. As such, eCall does not replace dialing 911 in the event of an accident.

An emergency call can be made automatically or manually.

Only make emergency calls if you or others are in need of rescue. Do not make an emergency call in the event of a breakdown or a similar situation.

Messages on the display

SOS NOT READY: the vehicle is not on or eCall not available.

During an active emergency call, SOS appears in the display.

You can find more information on the regional availability of eCall at: https://www.mercedes-benz-mobile.com/extra/ecall/

ⓘ If there is a malfunction of the emergency call system, the loudspeakers, microphone, air bag or the SOS button, for example, are faulty.

You can recognize a malfunction in the emergency call system by the following displays:

- A corresponding message will also appear in the driver's display.
- The SOS button lights up red continuously.

Emergency guide

In the event of an accident or breakdown, the emergency guide shows safety notes on the central display.

These include, for example:

- Recommended actions when leaving the vehicle
- Procedure for safely removing seat belts in the event of an accident whereby the vehicle comes to rest on its roof

The emergency guide is activated in the following situations:

- Occupant protection system has been triggered
- An emergency call is made
- Certain breakdown situations

ⓘ The availability as well as the scope of the emergency guide can vary depending in the country and vehicle equipment.

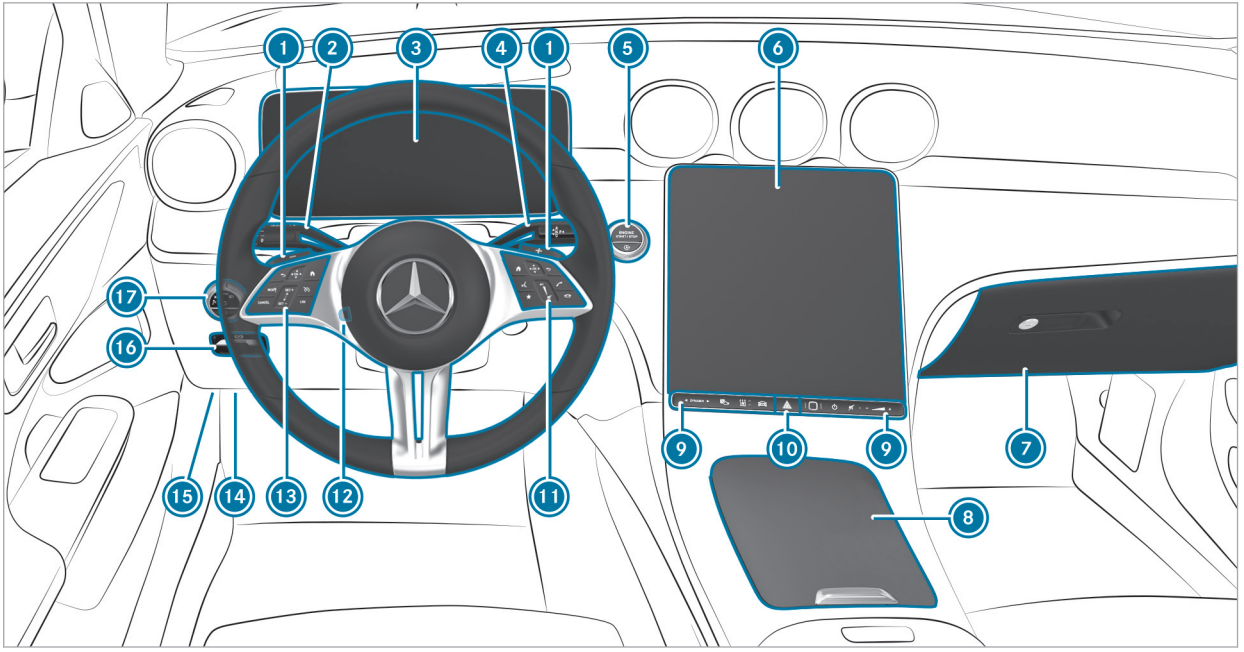

Left-hand drive vehicles

F254 0138 13

1 Steering wheel paddle shifters	→	267
2 Combination switch	→	193
3 Driver's display	→	392
4 DIRECT SELECT lever	→	261
5 ENGINE START / STOP Start/stop button	→	231
ECO start/stop function	→	244
6 Central display	→	420
7 Glove box	→	39
8 Stowage compartment	→	39
9 Switch panel for:		
DYNAMIC SELECT button	→	257
Active Parking Assist	→	371
Quick vehicle access		
Fingerprint sensor	→	430
Switches the MBUX multimedia system on/off	→	420
Switches sound on/off	→	439
Adjusts the volume	→	440
10 Hazard warning light system	→	48
11 Control panel for the MBUX multimedia system	→	428
12 Adjusts the steering wheel	→	165
13 Control panel:		
Driver's display	→	392
Cruise control	→	317
Active Distance Assist DISTRONIC	→	321
14 Diagnostics connection	→	83
15 Opens the hood	→	558
16 Electric parking brake	→	298
17 Light switch	→	192

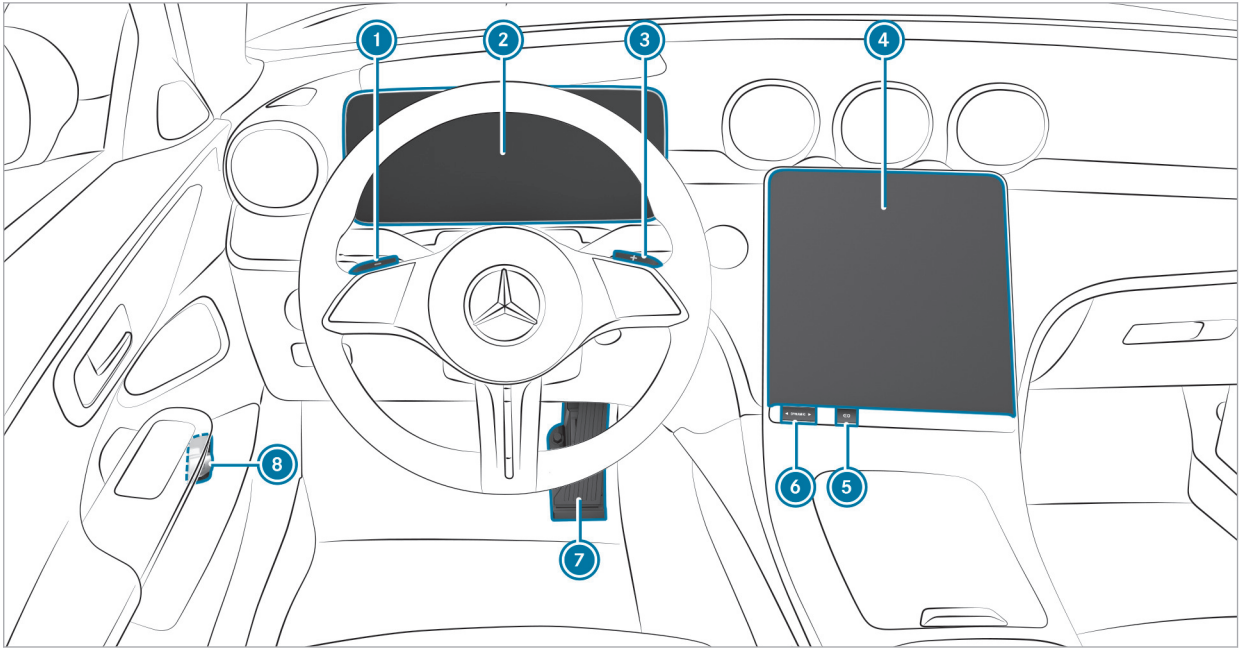

Left-hand-drive vehicles

F254 0138 13

1	[–] Increases recuperation	→	248
2	Driver display:		
	[READY] Operational readiness	→	410
	Power meter	→	409
	Trip computer	→	398
	ECO Assist	→	250
3	[+] Reduces recuperation	→	248
4	Central display:		
	Plug-in hybrid settings	→	457
	Energy flow display	→	458
5	Sets charging times	→	457
6	[DYNAMIC] DYNAMIC SELECT button	→	254
7	Haptic accelerator pedal	→	252
8	Depressurizes the fuel tank and operation for refueling	→	273

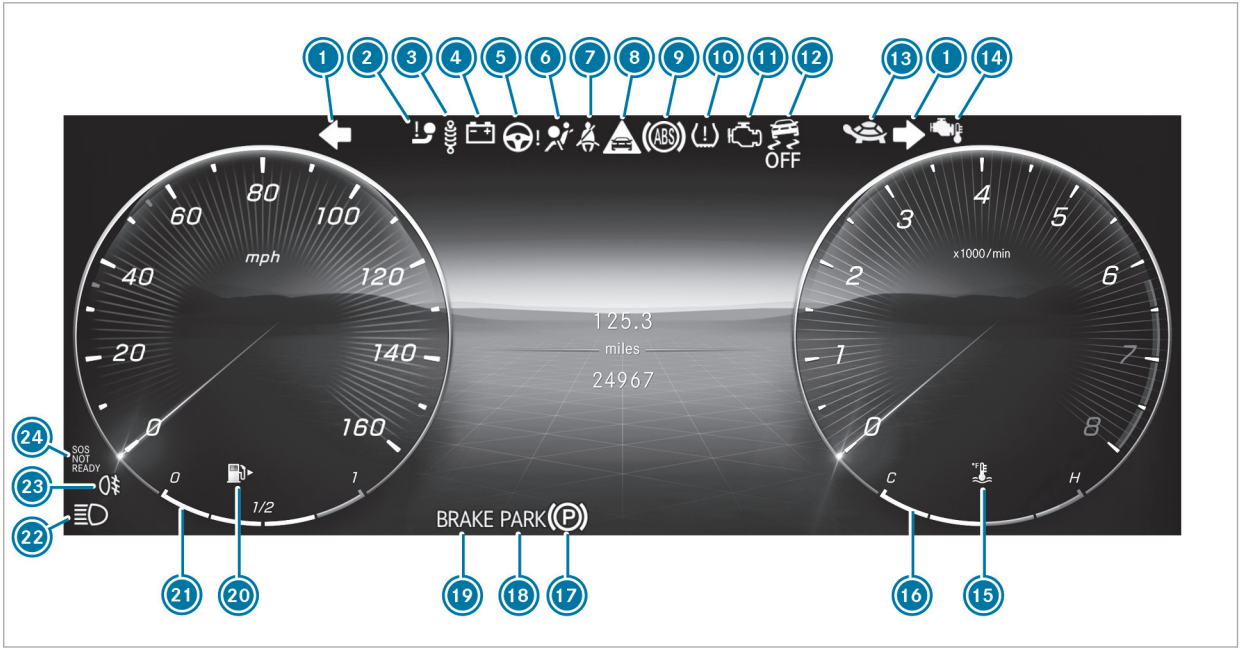

Driver display

F254 0138 13

1	Turn signal lights	→	193
2	Trailer hitch	→	869
3	Indicator lamp inoperative		
4	Electrical malfunction	→	871
5	Power steering (red)	→	869
	Power steering (yellow)	→	869
	Rear axle steering (red)	→	869
	Rear axle steering (yellow)	→	869
6	Restraint system	→	866
7	Seat belt	→	866
8	Distance warning	→	878
9	ABS	→	878
10	Tire pressure monitoring system	→	884
11	Engine diagnostics	→	871
12	ESP® OFF	→	878
	ESP®	→	878
13	Drive system: reduced power	→	868
14	Gasoline engine: reduced power	→	260
15	Coolant temperature	→	871
16	Coolant temperature display	→	398
17	Electric parking brake (yellow)	→	875
18	Electric parking brake (red)	→	875
	PARK USA only		
	Canada only		
19	Brakes (red)	→	875
	BRAKE USA only		
	Canada only		
	RBS Recuperative Brake System, USA only	→	875
	Brakes (yellow), Canada only	→	875
20	Reserve fuel with fuel filler flap location indicator	→	871
21	Fuel level	→	398
22	High beam	→	193

	Low beam	→	192
	Side lights	→	192
23	Rear fog light	→	193
24	Mercedes-Benz emergency call system	→	884

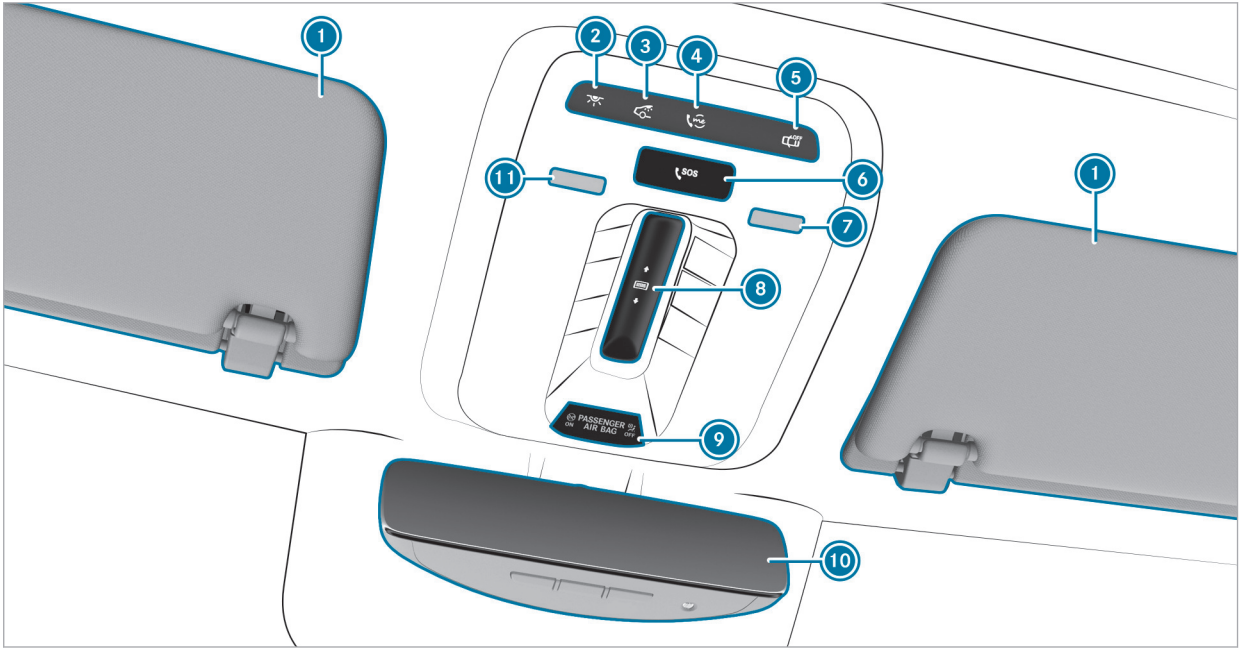

F254 0138 13

1	Sun visors (folding, available in extendable design as an optional extra)		
2	Switches the front interior lighting on/off	→	202
3	Switches the rear interior lighting on/off	→	202
4	me button	→	521
5	Switches automatic interior lighting control on/off	→	202
6	SOS button	→	521
7	Switches the right-hand reading lamp on/off	→	202
8	Opens/closes the panorama roof with power tilt/sliding panel	→	145
	Opens/closes the panorama roof with power tilt/sliding panel roller sunblind	→	145
9	PASSENGER AIR BAG indicator lamp	→	98
10	Inside rear-view mirror	→	210
11	Switches the left-hand reading lamp on/off	→	202

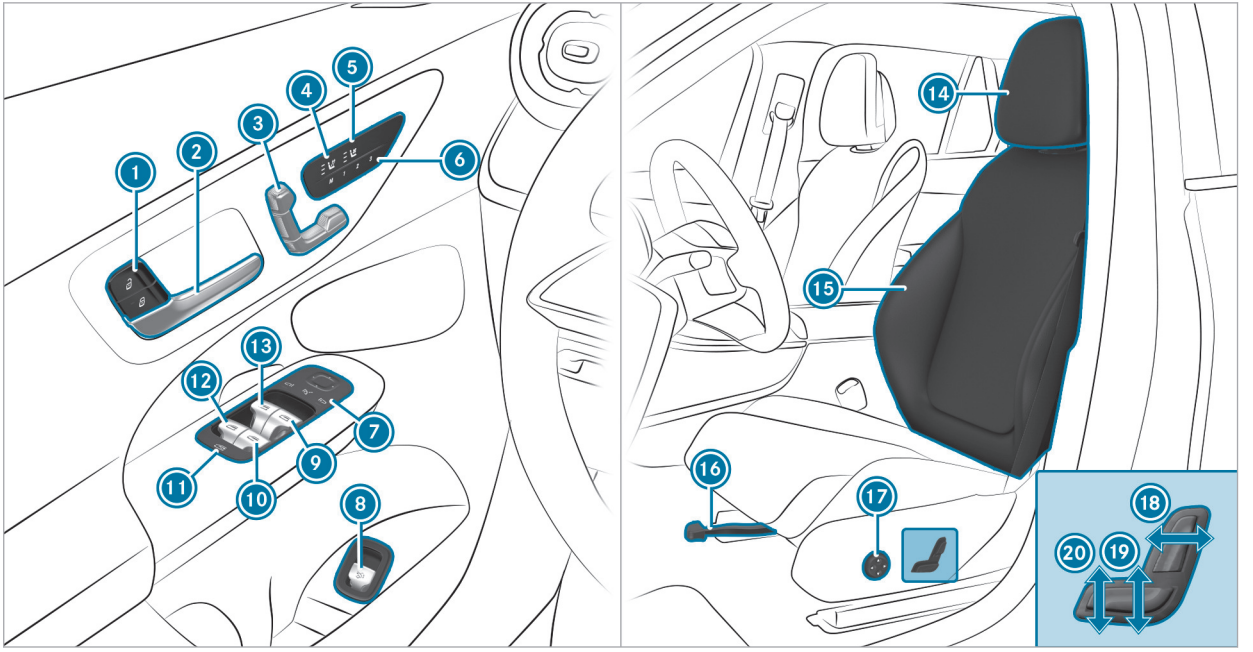

F254 0138 13

1	Locks/unlocks the vehicle	→	132
2	Opening the door	→	132
3	Adjusts the seats electrically	→	155
4	Switches the seat heating on/off	→	162
5	Switches the seat ventilation on/off	→	163
6	M Operates the memory function	→	169
7	Operates the outside mirrors	→	208
8	Opens/closes the tailgate	→	136
9	Opens/closes the right side window	→	142
10	Opens/closes the rear right side window	→	142
11	Child safety lock for the rear side windows	→	124
12	Opens/closes the rear left side window	→	142
13	Opens/closes the left side window	→	142
14	Adjusting the head restraints	→	158
15	Seat adjustment using the multimedia system	→	160
16	Adjusts the seat fore-and-aft position	→	153
17	Adjusts the 4-way lumbar support	→	157
18	Adjusts the seat backrest inclination	→	153
19	Adjusts the seat height	→	153
20	Adjusts the seat cushion inclination	→	153

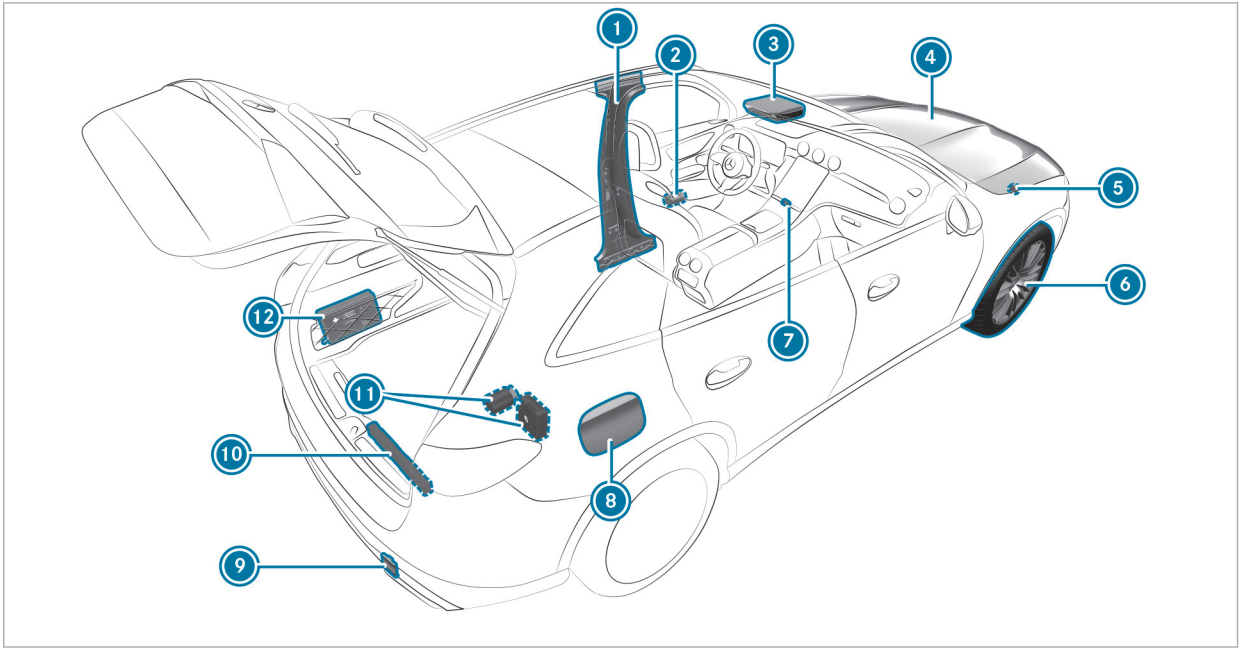

F254 0138 13

1 B-pillar with:		
QR code for accessing the rescue card	→	49
2 Safety vests	→	32
3 me button	→	521
SOS button	→	521
4 Checking and refilling operating fluids	→	757
Starting assistance	→	50
5 Tow-starting or towing away	→	54
6 Flat tire	→	52
7 Hazard warning light system	→	48
8 Fuel filler flap with:		
information label on fuel type	→	23
information label on tire pressure	→	603
QR code for accessing the rescue card	→	49
9 Tow-starting or towing away	→	54
10 Warning triangle	→	33
11 TIREFIT kit	→	579
12 First-aid kit (soft sided)	→	33

Calling up the Digital Operator's Manual

Multimedia system:

→ [⌂] ▸▸ Settings ▸▸ Info
▸▸ Operator's Manual
▸▸ Open Digital Operator's Manual

The Digital Operator's Manual describes the functions and operation of the vehicle and the multimedia system.

▶ Select one of the following menu items in the Digital Operator's Manual:

- Quick start: find the first steps towards adjusting your seat (driver's side).
- Tips: find information that prepares you for certain everyday situations with your vehicle.
- Animations: watch animations of the vehicle functions.
- Messages: receive additional information about the messages in the driver's display.
- Language: select the language for the Digital Operator's Manual.

You can search for keywords using the search field Search, in order to find quick answers to questions about the operation of the vehicle.

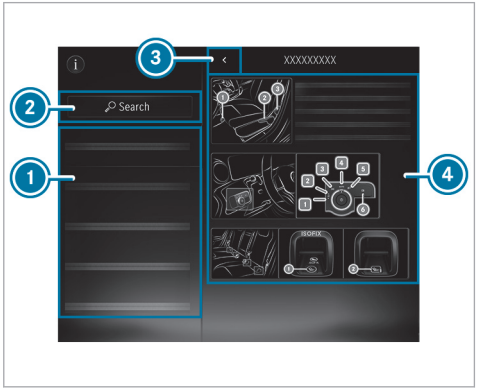

① Menu
② Search
③ Back
④ Contents section

Some sections in the Digital Operator's Manual, such as warning notes, can be expanded and collapsed.

Additional methods of calling up the Digital Operator's Manual:

Driver's display: call up brief information as display messages in the driver's display

MBUX Voice Assistant: call up via the voice control system

Global search: call up search results for contents of the Digital Operator's Manual in the home screen

For safety reasons, the Digital Operator's Manual is deactivated while driving.

Protecting the environment

ENVIRONMENTAL NOTE Environmental damage due to operating conditions and personal driving style

The pollutant emission of the vehicle is directly related to the way you operate the vehicle.

Operate your vehicle in an environmentally responsible manner to help protect the environment. Please observe the following recommendations on operating conditions and personal driving style.

Operating conditions:

- Make sure that the tire pressure is correct.
- Do not carry any unnecessary weight (e.g. roof luggage racks once you no longer need them).
- Adhere to the service intervals. A regularly serviced vehicle will contribute to environmental protection.
- Always have maintenance work carried out at a qualified specialist workshop.

Personal driving style:

- Do not depress the accelerator pedal when starting the engine.
- Do not warm up the vehicle while stationary.
- Drive carefully and maintain a suitable distance from the vehicle in front.
- Avoid frequent, sudden acceleration and braking.
- Change gear in good time and use each gear only up to ⅔ of its maximum engine speed.
- Switch off the vehicle in stationary traffic, e.g. by using the ECO start/stop function.
- Drive in a fuel-efficient manner. Observe the ECO display for an economical driving style.

Plug-in hybrid

ENVIRONMENTAL NOTE Environmental pollution caused by irresponsible disposal of the high-voltage battery

A high-voltage battery contains materials which are harmful to the environment.

- Dispose of defective high-voltage batteries at a qualified specialist workshop.

Environmental issues and recommendations:
It is recommended that you re-use or recycle materials instead of just disposing of them.

The relevant environmental guidelines and regulations serve to protect the environment and must be strictly observed.

Mercedes-Benz Genuine Parts

ENVIRONMENTAL NOTE Environmental damage due to not using recycled reconditioned components

Mercedes-Benz AG offers recycled reconditioned components and parts with the same quality as new parts. The same entitlement from the Limited Warranty is valid as for new parts.

▶ Use recycled reconditioned components and parts from Mercedes-Benz AG.

NOTE Impairment of the operating efficiency of the restraint systems from installing accessory parts or from repairs or welding

Air bags and Emergency Tensioning Devices, as well as control units and sensors for the restraint systems, may be installed in the following areas of your vehicle:

- doors
- door pillars
- sill
- seats
- cockpit
- driver's display
- center console
- lateral roof frame

▶ Do not install accessory parts such as audio systems in these areas.

▶ Do not carry out repairs or welding.

▶ Have accessories retrofitted at a qualified specialist workshop.

You could jeopardize the operating safety of your vehicle if you use parts, tires and wheels as well as accessories relevant to safety that have not been approved by Mercedes-Benz. Safety-critical systems (e.g. the brake system) may malfunction. Use only Mercedes-Benz Genuine Parts or parts of equal quality. Use only tires, wheels and accessory parts that have been specifically approved for your vehicle model.

Mercedes-Benz Genuine Parts are subject to strict quality inspections. Each part has been specially developed, manufactured or selected for Mercedes-Benz vehicles and adapted to them. Therefore, only Mercedes-Benz Genuine Parts should be used.

More than 300,000 different Mercedes-Benz Genuine Parts are available for Mercedes-Benz models.

All authorized Mercedes-Benz Service Centers maintain a supply of Mercedes-Benz Genuine Parts for necessary service and repair work. In addition, strategically located parts delivery centers provide for quick and reliable parts service.

Always specify the vehicle identification number (VIN) (→ page 756) when ordering Mercedes-Benz Genuine Parts.

Touch-sensitive controls

In addition to conventional switches and buttons, your vehicle is equipped with touch-sensitive controls.

These are located in the following areas of your vehicle:

- Roof and door control panel
- Climate control
- Steering wheel
- MBUX multimedia system

The controls have touch-sensitive user interface surfaces. You can control these surfaces by pressing or swiping to adjust settings or to trigger functions, for example.

When using touch-sensitive user interfaces, note the following points to avoid problems:

- Do not affix stickers or similar objects to the surfaces.
- Do not attach smartphone holders or other mountings to the surface of the central display.
- Keep the surfaces protected from moisture and wet conditions.
- Keep the surfaces free of dust and dirt (→ page 572).

Some touch-sensitive controls have both a symbol and integrated indicator lamps. Be sure to press on the symbol of the control element when using it.

Mercedes me App

Notes about the on-demand feature

You can also activate various functions (on-demand feature) subsequently via Mercedes me after purchasing your vehicle.

Information is available at any authorized Mercedes-Benz Center.

Activating on-demand feature using Mercedes me

Requirements

- The vehicle has a wireless connection.
- The vehicle is linked to the Mercedes me user account.

Ordering and activating on-demand feature

▶ Add the desired on-demand feature for the vehicle to the shopping basket in the Mercedes me Store.

▶ Complete the order.
The on-demand feature is activated when operating the vehicle.

Speeding up activation

▶ Switch the vehicle off and lock it.

▶ Unlock the vehicle after about two minutes and switch on the vehicle.
The on-demand feature has been activated. For some features, a notification also appears in the vehicle's multimedia system.

If the activation was not successful, repeat the process.

Service and vehicle operation

Vehicle operation outside the USA or Canada

When you are abroad with your vehicle, observe the following points:

- service points or replacement parts may not be available immediately.
- unleaded fuel may not be available for vehicles with a catalytic converter. Leaded fuel may cause damage to the catalytic converter.
- the fuel may have an extremely low octane number. Unsuitable fuel can cause engine damage.

Some Mercedes-Benz models are available in Europe through our European Delivery Program. For more information, please consult a Mercedes-Benz service outlet, or write to one of the following addresses:

in the USA:

Mercedes-Benz USA, LLC

One Mercedes-Benz Drive

Sandy Springs, GA 30328

in Canada:

Mercedes-Benz Canada, Inc.

2680 Matheson Blvd E, Suite 500

Mississauga, ON L4W 0A5

Maintenance

Your customer advisor confirms the service in the service report.

Roadside Assistance

The Mercedes-Benz Roadside Assistance Program offers technical help in the case of a breakdown. Your calls to the toll-free Roadside Assistance Hotline are answered by our agents 24 hours a day, 365 days a year.

1-800-FOR-MERCedes (1-800-367-6372) (USA)

1-800-387-0100 (Canada)

You can find further information in the Mercedes-Benz Roadside Assistance Program brochure (USA) or the "Roadside Assistance" section in the Service and Warranty booklet (Canada). You will find both in the vehicle document wallet.

Change of address or change of ownership

In the event of a change of address, please send us the "Notification of address change" in the Service and Guarantee booklet or simply call the Mercedes-Benz Customer Assistance Center (USA) on the hotline number 1-800-FOR-MERCedes (1-800-367-6372) or Customer Service (Canada) on 1-800-387-0100. We can then reach you in a timely fashion, if necessary.

If you sell your Mercedes, please leave all literature in the vehicle so that it is available to the next owner. If you have purchased a used vehicle, please send us the "Notice of Purchase of Used Car" in the Service and Guarantee booklet or simply call the Mercedes-Benz Customer Assistance Center (USA) at the hotline number 1-800-FOR-MERCedes (1-800-367-6372) or Customer Service (Canada) at 1-800-387-0100.

Possible danger due to substances hazardous to health

In compliance with Proposition 65 (“Prop65”), the following detachable label has been added to each vehicle sold in California:

WARNING

Operating, servicing and maintaining a passenger vehicle, pickup truck, van or off-road motor vehicle can expose you to chemicals including engine exhaust, carbon monoxide, phthalates, and lead, which are known to the State of California to cause cancer and birth defects or other reproductive harm. To minimize exposure, avoid breathing exhaust, do not idle the engine except as necessary, service your vehicle in a well-ventilated area and wear gloves or wash your hands frequently when servicing your vehicle. For more information go to www.P65Warnings.ca.gov/passenger-vehicle

A 000 817 82 02

Operating safety

WARNING Risk of accident due to malfunctions or system failures

If you do not have the prescribed service/maintenance work or any required repairs carried out, this could result in malfunctions or system failures.

- Always have the prescribed service and maintenance work or any required repairs carried out in a qualified specialist workshop.

WARNING Risk of accident or injury due to incorrect modifications on electronic component parts

Modification of electronic components, their software or wiring could impair their function and/or the function of other networked component parts or safety-relevant systems.

This can endanger the operating safety of the vehicle.

- Never tamper with the wiring and electronic component parts or their software.
- You should have all work on electrical and electronic components carried out at a qualified specialist workshop.

Observe the "On-board electronics" section in "Technical data".

WARNING Risk of fire caused by flammable material on hot exhaust system components

Flammable material such as leaves, grass or twigs may ignite if they come into contact with hot parts of the exhaust system.

- When driving on an unpaved road or off-road, check the vehicle underside regularly.
- In particular, remove trapped plant parts or other flammable material.
- If there is damage, consult a qualified specialist workshop immediately.

NOTE Damage to the vehicle due to driving too fast and due to impacts to the vehicle underbody or suspension components

In the following situations, in particular, there is a risk of damage to the vehicle:

- The vehicle becomes grounded, e.g. on a high curb or an unpaved road
- The vehicle is driven too fast over an obstacle, e.g. a curb, speed bump or pothole
- A heavy object strikes the underbody or suspension components

In situations such as these, damage to the body, underbody, suspension components, wheels or tires may not be visible. Components damaged in this way can unexpectedly fail or, in the case of an accident, may no longer absorb the resulting force as intended.

If the underbody paneling is damaged, flammable materials such as leaves, grass or twigs can collect between the underbody and the underbody paneling. These materials may ignite if they come into contact with hot parts of the exhaust system.

▶ Have the vehicle checked and repaired immediately at a qualified specialist workshop.

or

▶ If driving safety is impaired while continuing your journey, pull over and stop the vehicle immediately, while paying attention to road and traffic conditions, and contact a qualified specialist workshop.

Plug-in hybrid

Hybrid vehicles have a combustion engine and at least one electric motor. The energy supply for operating the vehicle electrically is provided by the vehicle's high-voltage electrical system.

DANGER Risk of death and fire due to modified and/or damaged components of the high-voltage on-board electrical system

The vehicle's high-voltage on-board electrical system is under high voltage. If you modify component parts in the vehicle's high-voltage on-board electrical system or touch damaged component parts, you may be electrocuted. In addition, modified and/or damaged components may cause a fire.

In the event of an accident or impact to the underbody, components of the high-voltage electrical system may be damaged although the damage is not visible.

▶ Never make any modifications to the high-voltage on-board electrical system.

▶ Do not switch on or use the vehicle if its high-voltage on-board electrical system components have been modified or damaged.

- Never touch damaged components of the high-voltage on-board electrical system.
- After an accident, do not touch any components of the high-voltage on-board electrical system.
- After an accident, have the vehicle transported away.
- Have the components of the high-voltage on-board electrical system checked at a qualified specialist workshop and replaced if necessary.

The components of the vehicle's high-voltage on-board electrical system are marked with yellow warning stickers. The cables of the vehicle's high-voltage on-board electrical system are orange in color.

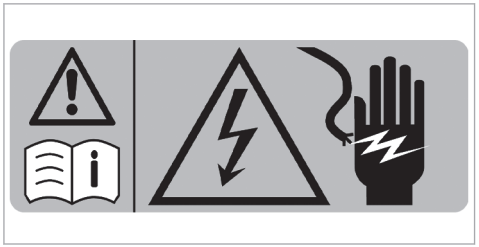

Example

High-voltage components that can become very hot are marked with an additional warning sticker:

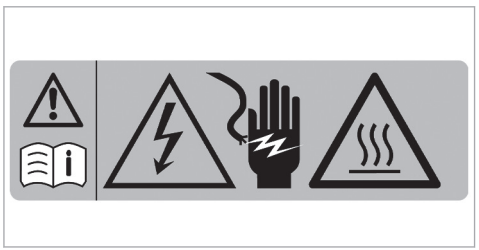

Vehicles with hybrid systems generate significantly less noise when stationary and when being driven compared with vehicles that have combustion engines.

When you are driving in electric mode, the vehicle may not be heard by other road users due to the significantly reduced noise generated when driving and when stationary.

It is for this reason that the vehicle is equipped with a sound generator, which serves as an acoustic vehicle alerting system (AVAS). This safety system is prescribed by law.

The external noise produced by the sound generator (AVAS) can be heard in the passenger compartment at low speeds and does not represent a malfunction.

Vehicles with a 48 V on-board electrical system

DANGER Risk of fatal injury by touching damaged high-voltage components

Vehicles with a 48 V on-board electrical system contain individual high-voltage compo-

nents. These high-voltage components are under high voltage.

If you modify component parts of these high-voltage components or touch damaged component parts, you may be electrocuted.

High voltage components may be damaged in an accident, although the damage may not be visible.

- ▶ Never perform modifications to component parts of high-voltage components.
- ▶ Never touch damaged component parts of high-voltage components.
- ▶ Never touch component parts of high-voltage components after an accident.

Vehicles with a 48 V on-board electrical system contain high-voltage components. These components are marked with a high-voltage label:

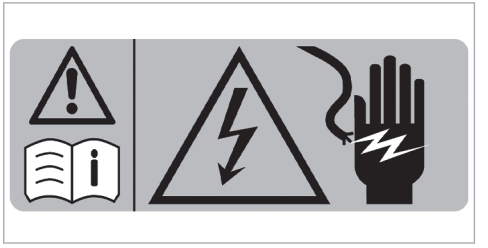

Example

All work on high-voltage components must be carried out at a qualified specialist workshop.

Installing the license plate on the front license plate bracket

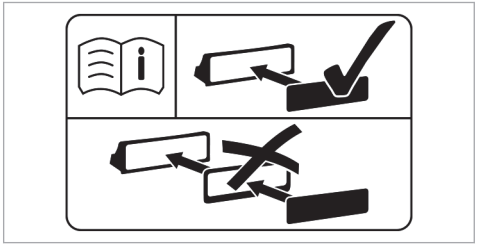

The information label can be found on the license plate bracket, either embossed or in sticker form.

! NOTE Malfunctions and system failures due to incorrect mounting of the license plate on the front license plate holder

If the license plate is incorrectly mounted on the front license plate holder, sensors, cameras or driving and safety systems may malfunction or fail.

Observe the following points when mounting the license plate on the front license plate holder:

- ▶ Mount the license plate directly on the license plate holder without advertising media or other holders.
- ▶ Mount the license plate so that it does not protrude above or to the side of the license plate adapter.

National information for components relevant to radio regulation

Information on crossing national borders

You must observe the radio regulations for the country in which you are currently operating your vehicle.

Wireless vehicle components

USA: "Radio based devices of this vehicle comply with Part 15 of the FCC Rules. Operation is subject to the following two conditions: 1) These devices may not cause harmful interference, and 2) These devices must accept any interference received, including interference that may cause undesired operation.Changes or modifications not expressly approved by the party responsible for compliance could void the user's authority to operate the equipment."

Canada: "This vehicle contains licence-exempt transmitter(s)/receiver(s) that comply with Innovation, Science and Economic Development Canada's licence-exempt RSS(s). Operation is subject to the following two conditions: (1) These devices may not cause interference. (2) These devices must accept any interference, including interference that may cause undesired operation of the devices." "Les émetteurs/récepteurs dans cette véhicule sont conforme aux CNR d'Innovation, Sciences et Développement économique Canada applicables aux appareils radio exempts de licence. L'exploitation est autorisée aux deux conditions suivantes : 1) Ces appareils ne doivent pas produire de brouillage; 2) Ces appareils doivent accepter tout brouillage radioélectrique subi, même si le brouillage est susceptible d'en compromettre le fonctionnement."

Diagnostics connection

The diagnostics connection is a technical interface in the vehicle. It is used, for example, in the context of repair and maintenance work or for reading out vehicle data in a specialist workshop. Diagnostic devices should therefore only be connected in a qualified specialist workshop.

⚠ **WARNING** Risk of accident due to connecting devices to the diagnostics connection

If you connect devices to the diagnostics connection of the vehicle, the function of vehicle systems and operating safety may be impaired.

- ▶ For safety reasons, we recommend that you use and connect only products approved by an authorized Mercedes-Benz Service Center.

WARNING Risk of accident due to objects in the driver's footwell

Objects in the driver's footwell may impede pedal travel or block a depressed pedal.

This will jeopardize the operating- and road safety of the vehicle.

- Stow all objects in the vehicle securely so that they cannot get into the driver's footwell.
- Make sure that there is always sufficient clearance for the pedals.
- Always install the floor mats securely and as prescribed.
- Do not use loose floor mats and do not place floor mats on top of one another.

NOTE Battery discharging from using devices connected to the diagnostics connection

Using devices at the diagnostics connection drains the battery.

- Check the charge level of the battery.
- If the charge level is low, charge the battery, e.g. by driving a considerable distance.

Please also observe the notes on the 12 V battery and on short-distance trips in the chapter "Driving and Parking" (→ page 237).

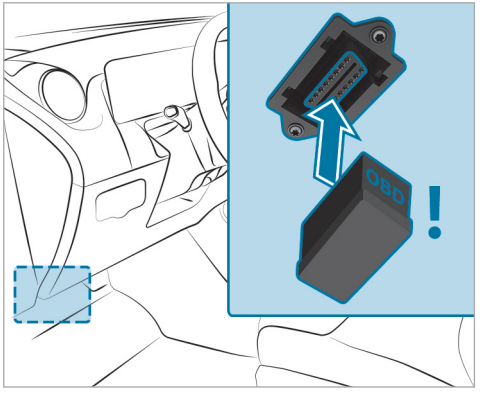

Connecting and using another device with the diagnostics connection can have the following effects:

- Malfunctions in the vehicle system
- Permanent damage to vehicle components

Please refer to the warranty terms and conditions for this matter.

Moreover, connecting equipment to the diagnostics connection can lead to emissions monitoring information being reset, for example. This may lead to the vehicle failing to meet the requirements of the next emissions inspection during the main inspection.

Qualified specialist workshop

A Mercedes-Benz Service Center is a qualified specialist workshop. It has the necessary special skills, tools and qualifications to correctly carry out the work required on your vehicle. This particularly applies to safety-relevant work.

Always have the following work on your vehicle carried out at a Mercedes-Benz Service Center:

- Safety-relevant work
- Service- and maintenance work
- Repair work
- Modifications as well as installations- and conversions
- Work on electronic components
- **Plug-in hybrid:** Work on the hybrid drive system
- **Vehicles with 48 V on-board electrical system:** Work on the high-voltage components of the 48 V on-board electrical system

Mercedes-Benz recommends a Mercedes-Benz Service Center.

Correct use of the vehicle

If you remove any warning stickers, you or others could fail to recognize certain dangers. Leave warning stickers in position.

Observe the following information in particular when driving your vehicle:

- the safety notes in this Operator's Manual, vehicle-specific supplements and further supplementary documents
- technical data for the vehicle
- traffic laws and regulations of the country you are currently driving in
- laws pertaining to motor vehicles and safety standards of the country you are currently driving in
- radio regulatory requirements of the country you are currently driving in

Notes for persons with electronic medical aids

Mercedes-Benz AG cannot, despite carefully developing vehicle systems, completely rule out the interaction of vehicle systems with electronic medical aids such as cardiac pacemakers.

In addition, there are components installed in the vehicle that, regardless of the operating status of the vehicle, can generate magnetic fields on a par with permanent magnets. These fields can be found, for example, in the area around the multimedia and sound system or also in the area of the seats, depending on the vehicle equipment.

For this reason, the following can occur in isolated cases, depending on the aids used:

- Medical aids malfunctioning
- Adverse health effects

Observe the notes and warnings of the manufacturer of the medical aids; if in doubt, contact the device manufacturer and/or your doctor. If there is continuing uncertainty concerning the possibility of medical aids malfunctioning, Mercedes-Benz AG recommends using only few electrical vehicle systems and/or maintaining a distance from the components.

Plug-in hybrid

When charging the high-voltage battery, keep a distance of at least an arm's length between the medical aid and the following components:

- The power supply equipment

This includes charging stations in the form of a wallbox or a public charging point, for example.

- Vehicle components carrying live voltage

  This includes the charging cable and the charging control box, for example.

Only have repairs and maintenance work in the area of the following components carried out at a qualified specialist workshop:

- Vehicle components carrying live voltage
- Transmission antenna
- Multimedia system and sound system

If you have any queries or suggestions, consult a qualified specialist workshop.

Problems with your vehicle

If you should experience any problem with your vehicle, particularly one that you believe may affect its safe operation, we urge you to contact a Mercedes-Benz Service Center immediately to have the problem diagnosed and rectified. If the problem is not resolved to your satisfaction there, please contact a Mercedes-Benz Service Center again or write to one of the following addresses.

In the USA:

Mercedes-Benz USA, LLC

Customer Assistance Center

One Mercedes-Benz Drive

Sandy Springs, GA 30328

In Canada:

Mercedes-Benz Canada, Inc.

Customer Assistance Center

2680 Matheson Blvd E, Suite 500

Mississauga, ON L4W 0A5

Reporting safety defects

USA only:
The following text is published as required of manufacturers under Title 49, Code of U.S. Federal Regulations, Part 575 pursuant to the “National Traffic and Motor Vehicle Safety Act of 1966”.

If you believe that your vehicle has a defect which could cause a crash or could cause injury or death, you should immediately inform the National Highway Traffic Safety Administration (NHTSA) in addition to notifying Mercedes-Benz USA, LLC.

If NHTSA receives similar complaints, it may open an investigation, and if it finds that a safety defect exists in a group of vehicles, it may order a recall and remedy campaign. However, NHTSA cannot become involved in individual problems between you, your dealer, or Mercedes-Benz USA, LLC.

To contact NHTSA, you may call the Vehicle Safety Hotline toll-free at 1-888-327-4236 (TTY: 1-800-424-9153) ; go to https://www.safercar.gov; or write to: Administrator, NHTSA, 400 Seventh Street, SW., Washington, DC 20590, USA.

You can also obtain other information about motor vehicle safety from https://www.safercar.gov.

Canada only:
The following text is published as required of manufacturers under subsection 18.4 (4) of the Motor Vehicle Safety Regulations.

If you believe that your vehicle has a defect which could cause a crash or could cause injury or death, you should immediately inform Transport

Canada in addition to notifying Mercedes-Benz Canada Inc.

If Transport Canada received similar complaints, it may open an investigation, and if it finds that a safety defect exists in a group of vehicles, it may order a recall and remedy campaign. However, Transport Canada cannot become involved in individual problems between you, your dealer, or Mercedes-Benz Canada Inc.

To contact Transport Canada, you may call the Defect Investigations and Recalls Division toll-free in Canada at 1-800-333-0510 or 819-994-3328 in the Gatineau-Ottawa area or internationally; may also go to the following websites for more information:

- English: https://www.tc.gc.ca/recalls
- French: https://www.tc.gc.ca/rappels

Limited Warranty

! **NOTE** Damage to the vehicle arising from violation of these operating instructions.

Damage to the vehicle can arise from violation of these operating instructions.

This damage is not covered either by the Mercedes-Benz implied warranty or by the New- or Used-Vehicle Warranty.

▶ Follow the instructions in these operating instructions on proper operation of your vehicle as well as on possible vehicle damage.

QR code for rescue card

QR codes are attached in the fuel filler flap and on the opposite side on the B-pillar. In the event of an accident, rescue services can use the QR code to quickly find the appropriate rescue card for your vehicle. The current rescue card contains the most important information about your vehicle (e.g. the routing of the electric lines) in compact form.

Further information can be obtained at https://www.mercedes-benz.de/qr-code

Data storage

Data processing in the vehicle

Electronic control units

There are electronic control units installed in your vehicle. Control units process data that they e.g. receive from vehicle sensors, generate themselves or exchange among themselves. Some control units are required for the safe operation of your vehicle. For example, some assist you when you are driving, such as driver assistance systems, while others enable convenience or infotainment functions.

The following provides you with general information regarding data processing in the vehicle. Additional information on what specific data is collected, stored and transmitted to third parties for what purpose in your vehicle can be found in the notes on the functional features in question in the respective operating instructions. These are

also available online and, depending on the equipment, digitally in the vehicle.

Personal data

Each vehicle is marked with a unique vehicle identification number. Depending on the country, this vehicle identification number can be used by, for example, government authorities to determine the identity of the owner. There are other possibilities for using data collected from the vehicle to identify the owner or driver, such as the license plate number.

The data generated or processed by control units may therefore be personal or, in certain circumstances, become personal. Depending on which vehicle data are available, it may be possible to make inferences about, for example, your driving behavior, your location, your route or your use patterns.

Legal requirements for the disclosure of data

If legal regulations exist, manufacturers are generally obligated to release data stored by the manufacturer to the necessary extent in individual cases at the request of state authorities. This may be the case during the investigation of a criminal offense, for example.

Within the framework of applicable law, state authorities are also authorized to take data readouts from vehicles themselves in specific cases. In the event of an accident, for example, information readouts can be taken from the air bag control unit to help to establish what happened.

Operating data in the vehicle

Control units process data to operate the vehicle.

This includes the following data, for example:

- Vehicle status information such as speed, longitudinal acceleration, lateral acceleration, number of wheel revolutions or the fastened seat belts indicator
- Ambient conditions, such as temperature, rain sensor or distance sensor

As a rule, this data is volatile, is not stored beyond the operating time and is processed only in the vehicle itself. Control units (e.g. the vehicle key) often contain data memories. These are used to temporarily or permanently document information about the vehicle's operating state, component stress, maintenance requirements or technical events and malfunctions.

Depending on the technical equipment, the following data will be stored:

- Operating status of system components (e.g. fill levels, tire pressure, battery status)
- Malfunctions or faults in important system components (e.g. lights, brakes)
- System reactions in special driving situations (e.g. air bag deployment, the intervention of stability control systems
- Information on events leading to vehicle damage

In special cases, it may be necessary to store data that would otherwise only be volatile. This may be the case if the vehicle has detected a malfunction, for example.

If you use services such as repair services or maintenance work, stored operational data readouts can be taken and used together with the vehicle identification number, where necessary. Readouts can be taken by service network employees such as workshops and manufactur-

ers, or third parties, such as breakdown services. The same is true in the case of warranty claims and quality assurance measures.

The readout will usually be taken via the diagnostics connection in the vehicle, which is required by law. The operating data readout taken documents technical conditions of the vehicle or individual components and helps to diagnose malfunctions, meet warranty obligations and improve quality. This data, particularly information on component stress, technical events, operating errors and other malfunctions, will be transmitted to the manufacturer for this purpose together with the vehicle identification number if necessary. In addition, the manufacturer is subject to product liability. For this reason, the manufacturer also uses operational data from the vehicle for e.g. recalls. This data can also be used to check customer claims for warranty and guarantee.

Fault memories in the vehicle can be reset by a service outlet or at your request as part of repair or maintenance work.

Comfort and infotainment functions

You can save comfort settings and individualization in the vehicle and change or reset them at any time.

Depending on the vehicle equipment, this includes the following settings, for example:

- Seat positions and steering wheel positions
- Suspension tuning and climate control settings
- Custom settings (e.g. interior lighting)

You can incorporate data into the vehicle's infotainment functions yourself as part of the selected equipment.

Depending on the vehicle equipment, this includes the following data, for example:

- Multimedia data (e.g. music, films or photos for playback in an integrated multimedia system)
- Address book data for use in conjunction with an integrated hands-free system or an integrated navigation system
- Navigation destinations that have been entered
- Data about the use of internet services

This data for comfort and infotainment functions can be saved locally in the vehicle or stored on a device that you have connected to the vehicle (e.g. smartphone, USB flash drive or MP3 player). If you have entered data yourself, you can delete it at any time.

The transfer of this data out of the vehicle will take place exclusively at your request. This applies in particular when you are using online services according to the settings you have selected.

Smartphone integration (e.g. Android Auto or Apple CarPlay®)

If your vehicle is equipped appropriately, you can connect your smartphone or another mobile device to the vehicle. You will then be able to control them using the controls integrated in the vehicle. The smartphone's picture and sound can be output via the multimedia system. Specific items of information will also be transferred to your smartphone. Depending on the type of integration, this may include position data, day/night

mode and other general vehicle statuses. Please refer to the vehicle Operator's Manual / infotainment system operating instructions for further information.

This integration allows the use of selected smartphone apps (e.g. navigation apps, music player apps). There will be no further interaction between your smartphone and the vehicle; in particular, vehicle data will not be directly accessible. The type of additional data processing is determined by the provider of the app being used. Whether you can configure settings for it and, if so, which ones, depend on the app and your smartphone's operating system.

Online services

Wireless network connection

If your vehicle has a wireless network connection, it enables data to be exchanged between your vehicle and additional systems. The wireless network connection is made possible by the vehicle's own transmitter and receiver or by a mobile end device that you have brought into the vehicle, for example, a smartphone. Online functions can be used via the wireless network connection. This includes online services and applications/apps provided to you by the manufacturer or by other providers.

Manufacturer's services

Regarding the manufacturer's online services, the individual functions are described by the manufacturer in a suitable place, for example, in the Operator's Manual or on the manufacturer's website, where the relevant data protection information is also given. Personal data may be used for the provision of online services. Data is exchanged via a secure connection, such as the manufacturer's designated IT systems. Any personal data which is collected, processed and used, other than for the provision of services, is done so exclusively on the basis of legal permission. This is the case, for example, for a legally prescribed emergency call system, a contractual agreement or when consent has been given.

You can have services and functions, some of which are subject to a fee, activated or deactivated. This excludes legally prescribed functions and services, such as an emergency call system.

Third-party services

If you use online services from other providers (third parties), these services are the responsibility of the provider in question and subject to that provider's data protection conditions and terms of use. As a general rule, the manufacturer has no influence on the content exchanged.

For this reason, when services are provided by third parties, please ask the service provider in question for information about the type, extent and purpose of the collection and use of personal data.

Data protection rights

Depending on your country or the equipment and range of functions of your vehicle as well as the services you use and the services on offer, you are entitled to different data protection rights. Further information on data protection and your data protection rights can either be found on the manufacturer's website or you will receive this information as part of the various services and service offers. There you will also find the contact

information for the manufacturer and its data protection officers.

At a workshop, for example, with the support of a specialist and possibly for a fee, you can have data read out which is stored only locally in the vehicle.

MBUX multimedia system/Mercedes me connect

If the vehicle is equipped with the MBUX multimedia system or Mercedes me connect, additional data about the vehicle's operation, the use of the vehicle in certain situations, and the location of the vehicle may be compiled by the MBUX multimedia system or Mercedes me connect.

For additional information, please refer to the "MBUX multimedia system" section and/or the Mercedes me connect Terms and Conditions.

Event data recorder

USA only:

This vehicle is equipped with an event data recorder (EDR). The main purpose of an EDR is to record, in certain crash or near crash-like situations, such as an air bag deployment or hitting a road obstacle, data that will assist in understanding how a vehicle's systems performed. The EDR is designed to record data related to vehicle dynamics and safety systems for a short period of time, typically 30 seconds or less.

The EDR in this vehicle is designed to record such data as:

- How various systems in your vehicle were operating;
- Whether or not the driver and passenger safety belts were buckled/fastened;
- How far (if at all) the driver was depressing the accelerator and/or brake pedal; and,
- How fast the vehicle was traveling.

These data can help provide a better understanding of the circumstances in which crashes and injuries occur. NOTE: EDR data are recorded by your vehicle only if a non-trivial crash situation occurs; no data are recorded by the EDR under normal driving conditions and no personal data (e.g., name, gender, age, and crash location) are recorded. However, other parties, such as law enforcement could combine the EDR data with the type of personally identifying data routinely acquired during a crash investigation.

To read data recorded by an EDR, special equipment is required, and access to the vehicle or the EDR is needed. In addition to the vehicle manufacturer, other parties, such as law enforcement, that have the special equipment, can read the information if they have access to the vehicle or the EDR.

EDR data may be used in civil and criminal matters as a tool in accident reconstruction, accident claims, and vehicle safety. Since the Crash Data Retrieval CDR tool that is used to extract data from the EDR is commercially available, Mercedes-Benz USA, LLC („MBUSA“) expressly disclaims any and all liability arising from the extraction of this information by unauthorized Mercedes-Benz personnel.

MBUSA will not share EDR data with others without the consent of the vehicle owners or, if the vehicle is leased, without the consent of the lessee. Exceptions to this representation include responses to subpoenas by law enforcement; by

federal, state or local government; in connection with or arising out of litigation involving MBUSA or its subsidiaries and affiliates; or, as required by law.

Warning: The EDR is a component of the Restraint System Module. Tampering with, altering, modifying or removing the EDR component may result in a malfunction of the Restraint System Module and other systems.

State laws or regulations regarding EDRs that conflict with federal regulation are pre\-empted. This means that in the event of such conflict, the federal regulation governs. As of Dec 2016, 17 states have enacted laws relating to EDRs.

Copyright

Free and open source software

Information on licenses for free and open-source software used in your vehicle can be found on the data carrier in your vehicle document wallet and with updates on the following website:

https://www.mercedes-benz.com/opensource

Registered trademarks

- Bluetooth® is a registered trademark of Bluetooth SIG, Inc.
- DTS™ is a registered trademark of DTS, Inc.
- Dolby® and MLP™ are registered trademarks of DOLBY Laboratories.
- ESP® and PRE-SAFE® are registered trademarks of Mercedes-Benz Group AG.
- HomeLink® is a registered trademark of Gentex Corporation.
- iPod® and iTunes® are registered trademarks of Apple Inc.
- Burmester® is a registered trademark of Burmester Audiosysteme GmbH.
- Microsoft® and Windows Media® are registered trademarks of Microsoft Corporation.
- SiriusXM® is a registered trademark of Sirius XM Radio Inc.
- HD Radio™ is a registered trademark of iBiquity Digital Corporation.
- Gracenote® is a registered trademark of Gracenote, Inc.
- ZAGAT Survey® and related brands are registered trademarks of Zagat Survey, LLC.

Brief overview of the most important points

Basic information

Make sure that the following prerequisites in particular have been met so that the components of the restraint system are able to provide the intended level of protection:

- Sit correctly (→ page 94).
- Fasten the seat belt correctly (→ page 95).
  - Function of the seat belt warning lamp [ ] (→ page 97).
  - Function of the rear seat belt status display (→ page 98).
- The restraint system warning lamp [ ] has gone out after the self-test (→ page 96).
- The PASSENGER AIR BAG indicator lamps display the correct status for the front passenger air bag (→ page 98).

Helping you to understand clearly

The "Occupant safety" chapter includes information on equipment, functions and behaviors that contribute directly to the safety of vehicle occupants.

The information is structured as follows:

- **Brief overview of the most important points:** this chapter provides an overview of the relationship between the restraint system and the correct behavior of all vehicle occupants.
- **Specific information:** in further sections of the "Occupant safety" chapter, you can find specific information on the equipment and functions of the restraint system.
- **Index:** you can also find certain topics in this Operator's Manual using the index.

The "Occupant safety" chapter does not provide information on topics including the following:

- Children in the vehicle (→ page 111)
- Driving and driving safety systems (→ page 303)
- Stowage areas (→ page 170)

Defining generic terms clearly

The following generic terms are used in this Operator's Manual:

- **Occupant safety:** comprises the components and system functions that help to minimize, as much as possible, the stresses and consequences for vehicle occupants caused by an accident.
- **Restraint system:** comprises those components that, along with the vehicle structure, help prevent vehicle occupants from potentially coming into contact with parts of the vehicle interior. The seat belts and air bags, for example, are components of the restraint system.
- **Child restraint system:** you can find all information on this topic in the chapter "Children in the vehicle" (→ page 111).

Be diligent

For the components of the restraint system to provide the intended level of protection, it is essential for your posture to be correct and for the seat belt to be fastened correctly.

Bear in mind that negligence when adopting your sitting position and fastening your seat belt may have serious consequences. Be diligent and make sure that all vehicle occupants are sitting correctly and have fastened their seat belts properly before starting every journey (→ page 94).

Information on the correct seat position

The seat position must be correct in order for the components of the restraint system to provide the intended level of protection.

The seat position influences both the protection provided by the seat belt and the additional protection provided by the air bag.

The correct seat position with an almost upright posture and a correctly fastened seat belt also reduce the risk posed by the air bag when it is deployed.

When choosing the seat, take note of the available space. When you are sitting with the right posture in a nearly upright position, your head should not touch the roof.

⚠ WARNING Risk of injury or death due to an incorrect seat position

If you deviate from the correct seat position, the air bag cannot provide its intended protective function.

Each vehicle occupant must make sure of the following.

- ▶ Put the seat in the correct position.
- ▶ Fasten seat belts correctly. Pregnant women must take particular care to ensure that the lap belt never lies across the abdomen.
- ▶ Observe the following information.

In order for the restraint system to provide the intended level of protection, observe the following information:

- Before starting your journey, adjust your seat correctly (→ page 152).

  When doing so, make sure you are able to fasten your seat belt correctly. The shoulder belt strap must be routed forward from the seat belt outlet over the center of your shoulder.
- Keep your distance from the air bags, especially the front air bags. Set the driver's seat and front passenger seat as far back as possible while making sure the seat belt is fastened correctly.
- If persons are sitting on the rear seats, vehicle occupants should maintain a sufficient distance to the parts of the vehicle interior in front of them.
- Make sure there are no people, animals or objects between the vehicle occupants and an air bag.
- If you are the driver, observe the following information on the correct position of the driver's seat (→ page 152).

  Hold the steering wheel only by the steering wheel rim. This allows the driver's air bag to fully deploy.
- Assume a nearly upright position, with your buttocks as far back as possible in the gap between the seat cushion and seat backrest.

  This ensures that your back lies as flat and firmly as possible against the seat backrest.

- While driving, do not lean forward and do not lean against the door or side window. You may otherwise be in the deployment area of the air bags.
- Sit with your feet resting on the floor, if possible. Your thighs are slightly supported by the seat cushion

  Do not put your feet up on the cockpit, for example. Your feet may otherwise be in the deployment area of the air bag.
- Fasten the seat belt correctly (→ page 95).

Notes on wearing the seat belt correctly

Always fasten your seat belt correctly before starting a journey. A seat belt can provide the best level of protection only if it is worn correctly.

⚠ WARNING Risk of injury or death due to incorrectly fastened seat belt

If the seat belt is not worn correctly, it cannot perform its intended protective function.

In addition, an incorrectly fastened seat belt can also cause injuries, for example, in the event of an accident or when braking or changing direction suddenly.

▶ Always ensure that all vehicle occupants have their seat belts fastened correctly and are sitting properly.

⚠ WARNING Risk of injury or death when additional restraint systems are not used for persons with a smaller stature

Persons under 5 ft (1.50 m) tall cannot wear the seat belt correctly without a suitable additional restraint system.

▶ Always secure persons under 5 ft (1.50 m) tall in a suitable restraint system.

Observe the following information on the correct seat position and sitting position (→ page 94).

Each vehicle occupant must observe the following notes in particular:

- The seat belt must not be twisted:
- The shoulder belt strap must be routed forward from the seat belt outlet over the center of your shoulder.
- The shoulder belt strap should neither touch your neck nor be routed under your arm or behind your back.
- The lap belt must be routed as low down across the hips as possible.

  In addition, push the lap belt down as far as possible across your hips and pull tight with the shoulder belt strap. Never route the lap belt across your abdomen.

  Pregnant women must also take particular care with this.
- The shoulder belt strap and lap belt must fit snugly against the body after being tightened.
- Avoid wearing bulky clothing, e.g. a winter coat.
- Never route the seat belt across sharp, pointed, abrasive or fragile objects.
- Only one person should use each seat belt at any one time.

- Never secure objects with a seat belt if the seat belt is also being used by one of the vehicle's occupants.

  Also ensure that no objects, e.g. a cushion, are ever placed between a person and the seat.

If you are driving with a child in the vehicle, observe the information in the chapter "Children in the vehicle" (→ page 111)

Observe the instructions for loading the vehicle when securing objects, luggage or loads (→ page 170).

Fastening and adjusting seat belts

If the seat belt is pulled quickly or sharply, the seat belt retractor locks. The seat belt strap cannot be pulled out any further.

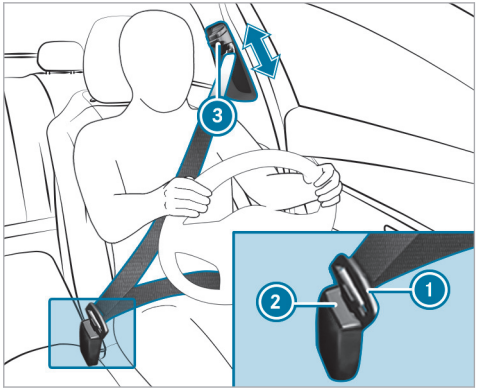

F254 0138 13

- Always engage seat belt tongue (1) of the seat belt into seat belt buckle (2) of the corresponding seat.
- **To adjust the seat belt height:** press button (3) on the seat belt outlet and slide the seat belt outlet to the desired position.
- **To engage the seat belt outlet:** release button (3) and ensure that the seat belt outlet engages.

! **NOTE** Deployment of components of the restraint system when the front passenger seat is unoccupied and a seat belt is buckled

When the front passenger seat is unoccupied and the seat belt tongue of the seat belt is engaged in the seat belt buckle, components of the restraint system may deploy unnecessarily on the front passenger side, e.g. the Emergency Tensioning Device.

- Only buckle the seat belts as intended.

ⓘ Observe the information on child seat safety feature of the seat belt (→ page 119).

Function of the restraint system warning lamp

When the vehicle is switched on, a self-test is performed, during which the restraint system warning lamp [ ] lights up. It goes out no later than a few seconds after the vehicle is started. The components of the restraint system are then functional.

A malfunction has occurred in the restraint system if:

- the restraint system warning lamp [ ] does not light up or lights up continuously when the vehicle is switched on.
- the restraint system warning lamp [ ] lights up continuously or repeatedly during a journey.

If components of the restraint system have been deployed, the restraint system warning lamp [ ] will light up continuously.

WARNING Risk of injury due to malfunctions in the restraint system

Components in the restraint system may be activated unintentionally or not deploy as planned in an accident.

▶ Have the restraint system checked and repaired immediately at a qualified specialist workshop.

Plug-in hybrid: if the restraint system is malfunctioning, the automatic high-voltage emergency shutoff may not function.

DANGER Risk of fatal injuries due to malfunctions of the automatic high-voltage emergency shutoff

In the event of an accident, the high-voltage on-board electrical system may not be deactivated as intended.

You may be electrocuted if you touch the damaged component parts of the high-voltage on-board electrical system.

▶ Have the automatic high-voltage emergency shutoff checked and repaired immediately at a qualified specialist workshop.

▶ After an accident, switch off the vehicle immediately.

Mercedes-Benz recommends that you have the vehicle towed to a qualified specialist workshop.

Function of the seat belt warning lamp

The [ ] seat belt warning lamp in the driver display is a reminder that all vehicle occupants must wear their seat belts correctly.

The [ ] seat belt warning lamp lights up for six seconds every time the vehicle is started.

In addition, a warning tone may sound.

When the driver's and front passengers doors are closed and the driver and front passenger have fastened their seat belts, the seat belt warning goes out.

In the following cases, the seat belt warning lights up during a journey if:

- The driver or front passenger has not fastened their seat belt and the following criteria is met:
  - The vehicle speed exceeds 5 mph (9 km/h) for more than 20 seconds.
  - The vehicle speed exceeds 15 mph (25 km/h) once.
- The driver or front passenger unfastens their seat belt while the vehicle is in motion.

Function of the rear seat belt status display

The rear seat belt status display in the driver's display is a reminder that all vehicle occupants must wear their seat belts correctly.

In addition, a warning tone may sound.

If a person unfastens a seat belt in the rear passenger compartment while the vehicle is motion, the rear seat belt status display appears again.

Display in the driver's display

Every time the vehicle is switched on, the rear seat belt status display informs you for a certain amount of time which rear seat belt is not fastened.

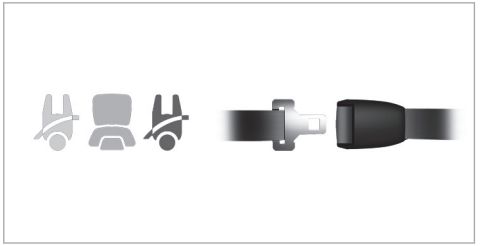

You can determine the status of the rear seat belt by the color of the seat symbol in the driver's display as follows:

- Gray: the rear seat belt is not fastened.
- Green: the seat belt tongue of a rear seat belt is engaged in the seat belt buckle of the displayed seat.
- Red: the person in the rear seat has unfastened their seatbelt.

Function of the PASSENGER AIR BAG indicator lamps (front passenger air bag)

The PASSENGER AIR BAG indicator lamps display the status of the front passenger air bag.

If the front passenger seat is occupied or a child restraint system is installed on the front passenger seat, you must make sure, both before and during a journey, that the status of the front

passenger air bag is correct for the current situation.

⚠ **WARNING** Risk of potentially fatal injuries due to objects trapped under the front passenger seat

Objects trapped under the front passenger seat may interfere with the function of the automatic front passenger air bag shutoff or damage the system.

▶ Do not stow any objects under the front passenger seat.

▶ When the front passenger seat is occupied, ensure that no objects have become trapped beneath the front passenger seat.

Self-test: when the vehicle is switched on, both the PASSENGER AIR BAG ON and OFF indicator lamps light up simultaneously for several seconds.

After the self-test, you can determine the status of the front passenger air bag as follows:

- **Front passenger air bag disabled:** PASSENGER AIR BAG OFF lights up continuously.

  The front passenger air bag will not be deployed in the event of an accident. If PASSENGER AIR BAG OFF is lit, no one may use the front passenger seat.

  If a rearward-facing child restraint system is installed on the front passenger seat, PASSENGER AIR BAG OFF must be lit continuously.

- **Front passenger air bag enabled:** PASSENGER AIR BAG ON lights up for up to 60 seconds or both the PASSENGER AIR BAG ON and OFF indicator lamps do not light up.

  The front passenger air bag may be deployed during an accident. If the front passenger air bag has this status, no rearward-facing child restraint system may be installed on the front passenger seat.

ⓘ If you are driving with a child in the vehicle, observe the information in the chapter "Children in the vehicle" (→ page 111)

⚠ **WARNING** Risk of injury or death due to a disabled front passenger airbag

The front passenger airbag is disabled when the PASSENGER AIR BAG OFF indicator lamp is lit.

A person in the front passenger seat could then, for example, come into contact with the vehicle interior, especially if the person is sitting too close to the cockpit.

If the front passenger seat is occupied, always ensure that:

- The classification of the person in the front passenger seat is correct and the front passenger airbag is enabled or disabled in accordance with the person in the front passenger seat.
- The front passenger seat has been moved as far back as possible.
- The person is seated correctly.

▶ Both before and during the journey, ensure that the status of the front passenger airbag is correct.

Malfunction of the automatic front passenger air bag shutoff

The PASSENGER AIR BAG OFF indicator lamp and the restraint system indicator lamp light up simultaneously.

In this case, no one may use the front passenger seat and no child restraint system may be installed on the front passenger seat.

Have the automatic front passenger air bag shutoff checked and repaired immediately at a qualified specialist workshop.

Disabling or enabling the front passenger air bag

The automatic front passenger air bag shutoff can disable or enable the front passenger air bag and front passenger knee bag according to the situation.

This happens automatically as a result of the classification of the person or child restraint system on the front passenger seat.

You cannot manually disable or enable the front passenger air bag.

Information on the child restraint system

When installing a child restraint system, observe the notes in "Children in the vehicle" (→ page 111).

Notes on the child restraint system on the front passenger seat

WARNING Risk of injury or fatal injuries if the front passenger air bag is enabled

If the front passenger air bag is enabled, a child on the front passenger seat may be struck by the front passenger air bag in the event of an accident.

▶ NEVER use a rearward-facing child restraint system on a seat with an ENABLED FRONT AIR BAG. This can result in the DEATH of or SERIOUS INJURY to the CHILD.

Also pay particular attention to the notes on rearward-facing or forward-facing child restraint systems on the front passenger seat (→ page 115).

Information on the automatic functions of the restraint system

Function of the automatic front passenger air bag shutoff

A person on the front passenger seat must observe the following information:

- Sit correctly (→ page 94).
- Fasten the seat belt correctly (→ page 95).

The automatic front passenger air bag shutoff can activate or deactivate the front passenger air bag and front passenger knee bag according to the situation.

Make sure you observe the following information:

- Status of the front passenger air bag: see "Function of the PASSENGER AIR BAG indicator lamps" (→ page 98).
- When installing a child restraint system on the front passenger seat, observe the vehicle-specific information (→ page 115).

Status of the front passenger air bag in relation to the stature of the person:

- **Front passenger air bag disabled:** PASSENGER AIR BAG OFF lights up continuously.

  The front passenger air bag will not be deployed in the event of an accident. If PASSENGER AIR BAG OFF is lit, no one may use the front passenger seat.

- **Front passenger air bag enabled:** PASSENGER AIR BAG ON lights up for up to 60 seconds or until both the PASSENGER AIR BAG ON and OFF indicator lamps go out.

  The front passenger air bag may be deployed during an accident. Observe the following information on the correct seat position (→ page 94).

  Vehicles with rear seats: a person of smaller stature should use a rear seat.

System limits

The front passenger air bag may otherwise be disabled by mistake, for example, in the following situation:

- The front passenger transfers their weight by supporting themselves on a vehicle armrest.
- The front passenger sits in such a way that their weight is raised from the seat surface.

! **NOTE** Deployment of components of the restraint system when the front passenger seat is unoccupied

In an accident, the components of the restraint system may deploy unnecessarily on the front passenger side if:

- There are heavy objects on the front passenger seat.
- The seat belt tongue is engaged in the seat belt buckle of the front passenger seat and the front passenger seat is unoccupied.

▶ Store objects in a suitable place.

▶ Only one person should use each seat belt at any one time.

Depending on the detected accident situation, the window air bag on the front passenger side may deploy. The air bag is deployed regardless of whether the front passenger seat is occupied.

Function of PRE-SAFE® (anticipatory occupant protection)

PRE-SAFE® is able to detect certain critical driving situations and implement pre-emptive measures to protect the vehicle occupants.

PRE-SAFE® can implement the following measures independently of each other:

- Tightening the seat belts on the driver's seat and front passenger seat.
- Closing the side windows.
- **Vehicles with sliding sunroof:** closing the sliding sunroof.
- **Vehicles with memory function:** moving the front passenger seat to a more favorable seat position.
- **PRE-SAFE® Sound:** provided that the multimedia system is switched on, generating a brief noise signal to stimulate the innate protective mechanism of a person's hearing.

! **NOTE** Damage caused by objects in the footwell or behind the seat

The automatic adjustment of the seat position may result in damage to the seat and/or the object.

▶ Stow objects in a suitable place.

Reverting the PRE-SAFE® system measures

If an accident did not occur, the pre-emptive measures that were taken will be reversed.

You will need to perform certain settings yourself.

▶ If the seat belt pre-tensioning is not reduced, move the seat backrest back slightly.
The locking mechanism will release.

Function of PRE-SAFE® PLUS (anticipatory occupant protection plus)

PRE-SAFE® PLUS can detect certain impacts, particularly an imminent rear impact, and take pre-emptive measures to protect the vehicle occupants. These measures may not necessarily prevent an imminent impact.

PRE-SAFE® PLUS can implement the following measures independently of each other:

- Tightening the seat belts on the driver's seat and front passenger seat.
- Increasing brake pressure when the vehicle is stationary. This brake application is canceled automatically when the vehicle pulls away.

If an accident did not occur, the pre-emptive measures that were taken will be reversed.

System limits

The system will not initiate any action in the following situations:

- If the vehicle is backing up

  or
- When the vehicle is towing a trailer and there is a risk of a rear-end collision

The system will not initiate a brake application in the following situations:

- During a journey

or

- When the vehicle is entering or exiting a parking space using Active Parking Assist

You can watch an animation on this topic via the following link:

Function of PRE-SAFE® Impulse Side

If an imminent side impact is detected, PRE-SAFE® Impulse Side can pre-emptively move the front seat vehicle occupant's upper body towards the center of the vehicle. It does this by rapidly inflating an air cushion in the outer seat side bolster of the seat backrest on the side on which the impact is anticipated. This increases the distance between the door and the vehicle occupant.

If PRE-SAFE® Impulse Side has been deployed or is faulty, a display message reading PRE-SAFE Pulse Side Inoperative See Operator's Manual will appear.

Seat belt adjustment function

Vehicles with PRE-SAFE®: after you have fastened the seat belt of the front seat, it may adjust itself against your body by pulling at the shoulder until somewhat tight. Do not hold the seat belt tightly while it is adjusting.

This function is a reminder that all vehicle occupants must wear their seat belts correctly.

You can activate and deactivate the seat belt adjustment function using the multimedia system (→ page 103).

Activating/deactivating seat belt adjustment via the multimedia system

Multimedia system:

→ [⌂] ▸▸ Settings ▸▸ Vehicle ▸▸ Occupant Protection

▶ Activate or deactivate Belt adjustment.

Overview of the automatic measures after an accident

Depending on the type and severity of the accident, and depending on the vehicle's equipment, the following measures can be implemented, forexample:

- automatic braking (post-collision brake) (→ page 104)
- activating the hazard warning lights
- triggering an automatic emergency call (→ page 58)
- Switching off the engine

  To start the vehicle again, switch the vehicle off and on once more (→ page 231). Depending on the type and severity of the accident, you may no longer be able to start the vehicle.
- switching off the fuel supply
- **Plug-in hybrid:** switching off the hybrid system and high-voltage on-board electrical system
- unlocking the vehicle doors
- lowering the side windows

- displaying the emergency guide in the central display (→ page 58)
- switching on the interior lighting

Function of the post-collision brake after an accident

Depending on the accident situation, the post-collision brake can minimise the severity of a further collision or even avoid it.

If an accident is detected, the post-collision brake can initiate automatic braking. When the vehicle has come to a standstill, the electric parking brake is automatically applied.

The driver can cancel automatic braking by taking the following actions:

- Braking more strongly than automatic braking
- Fully depressing the accelerator pedal with force

Purpose and function of the restraint system

Overview of deployment situations (restraint system)

Make sure that the following prerequisites in particular have been met so that the components of the restraint system are able to provide the intended level of protection:

- Sit correctly (→ page 94).
- Fasten the seat belt correctly (→ page 95).
  - Function of the seat belt warning lamp (→ page 97).
  - Function of the rear seat belt status display (→ page 98).
- The restraint system warning lamp is not lit up after the self-test (→ page 96).
- The PASSENGER AIR BAG indicator lamps display the correct status of the front passenger air bag (→ page 98).

Depending on the detected deployment situation, the components of the restraint system can be activated or deployed independently of each other:

- Emergency Tensioning Device: frontal impact, rear impact, side impact, rollover
- Driver's air bag, front passenger air bag: frontal impact
- Knee air bag: frontal impact
- Side impact air bag: side impact
- Window curtain air bag: side impact, rollover, frontal impact
- PRE-SAFE® Impulse Side: side impact

The installation location of an air bag is identified by the AIRBAG symbol (→ page 110).

Observe the information on the function of the restraint system (→ page 105).

Information on how the restraint system works

How the restraint system functions depends on the severity of the impact detected and the apparent type of accident.

For more information about types of accidents, see "Overview of deployment situations" (→ page 104).

The activation thresholds for the components of the restraint system are determined based on the evaluation of the sensor values measured at various points in the vehicle. This process is pre-emptive in nature. The triggering/deployment of the components of the restraint system must take place in good time at the start of the collision.

Factors that can be seen and measured only after a collision has occurred cannot play a decisive role in air bag deployment. Nor do they provide an indication of air bag deployment.

The vehicle may be deformed significantly without an air bag being deployed. This is the case if only parts which are relatively easily deformed are affected and the rate of vehicle deceleration is not high. Conversely, an air bag may be deployed even though the vehicle suffers only minor deformation. If very rigid vehicle parts such as longitudinal members are hit, this may result in sufficiently high levels of vehicle deceleration.

Depending on the apparent type of accident and the detected deployment situation, Emergency Tensioning Devices and/or air bags can supplement the protection offered by a correctly worn seat belt.

When enabled, an air bag can provide additional protection for the respective vehicle occupant.

Potential protection provided by each air bag:

- Knee air bag: thigh, knee and lower leg
- Driver's air bag, front passenger air bag: head and ribcage
- Window air bag: head
- Side air bag: ribcage, also pelvis for front seat occupants

However, no system available today can completely eliminate injuries and fatalities in every accident situation. In particular, the seat belt and air bag generally do not protect against objects penetrating the vehicle from the outside. It is also not possible to completely rule out the risk of injury caused by the air bag deploying.

Mercedes-Benz recommends that you have the vehicle towed to a qualified specialist workshop after an accident. Take this into account, particularly if an Emergency Tensioning Device is triggered or an air bag deployed.

If the Emergency Tensioning Devices are triggered or an air bag is deployed, you will hear a bang, and a small amount of powder may also be released:

- The bang will not generally affect your hearing.
- In general, the powder released is not hazardous to health but may cause short-term breathing difficulties to persons suffering from asthma or other pulmonary conditions.

  Provided it is safe to do so, leave the vehicle immediately or open the window in order to prevent breathing difficulties.

Air bags and pyrotechnic Emergency Tensioning Devices contain perchlorate material, which may require special handling or environmental protection measures. National guidelines regarding

waste disposal must be observed. In California, see the https://dtsc.ca.gov/. Using the search function, you will find information on perchlorate, for example.

Information on the limited protection provided by the restraint system

Risk due to the incorrect behavior of vehicle occupants

All vehicle occupants must make sure of the following in particular:

- They observe the information on the correct seat position (→ page 94).
- There are no heavy, sharp-edged or fragile objects in the pockets of their clothing. Store such objects in a suitable place.

WARNING Risk of injury or death due to an incorrect seat position

The seat belt does not offer the intended level of protection if you have not moved the seat backrest to an almost vertical position. In particular, you could slip beneath the seat-belt and become injured.

- ▶ Adjust the seat properly before beginning your journey.
- ▶ Always ensure that the seat backrest is in an almost vertical position and that the shoulder belt is routed across the center of your shoulder.

Risk due to objects in the vehicle interior

All vehicle occupants must make sure of the following in particular:

- They observe the information on the correct seat position (→ page 94).
- There are no objects between the seat, door and door pillar (B-pillar).
- There are no hard objects, e.g. coat hangers, hanging on the grab handles or coat hooks.
- There are no heavy, sharp-edged or fragile objects in the pockets of their clothing. Store such objects in a suitable place.

WARNING Risk of injury or death due to blocked seat belt buckle or seat belt anchorage

Objects next to the front seat that block the seat belt buckle or the moving seat belt anchorage on the front seat impair the function of the Emergency Tensioning Devices.

- ▶ Before starting the journey, make sure that there are no objects around the seat belt buckle or between the front seat and door.

WARNING Risk of injury from objects in the deployment area of an airbag

Objects in the deployment area of an airbag can hinder or prevent the correct deployment of the airbag.

The airbag may then deploy in an uncontrolled manner and may even cause additional injuries to the vehicle occupants by deploying. This may be the case in particular if the airbag is integrated into the seat.

- ▶ Always stow and secure objects correctly.
- ▶ Before commencing your journey, make sure that no objects are stowed in the deployment area of an airbag.

The installation location of an air bag is identified by the AIRBAG (→ page 110) symbol.

Risk due to installing accessories

Do not attach accessories such as mobile navigation devices, mobile phones or cup holders within the deployment area of an air bag, e.g. on the cockpit, on the door, on the side window or on the side trim.

In addition, no connecting cables, tensioning straps or retaining straps may be routed or attached to the vehicle within the deployment area of an air bag. Always comply with the accessory manufacturer's installation instructions and, in particular, the notes on suitable places for installation.

⚠ **WARNING** Risk of injury or death due to unsuitable protective covers

Unsuitable protective covers mean that air bags can no longer protect vehicle occupants as they are designed to do.

- ▶ Use only protective covers approved by Mercedes-Benz for the seat in question.

In addition, the function of the automatic passenger air bag deactivation may be restricted by an unsuitable protective cover. If the front passenger seat is occupied, ensure that the PASSENGER AIR BAG indicator lamps display the correct status of the front passenger air bag (→ page 98).

Risk due to pets in the vehicle interior

⚠ **WARNING** Risk of accident and injury due to animals left unsecured or unattended in the vehicle

If you leave animals in the vehicle unattended or unsecured, they could possibly press buttons or switches.

An animal may:

- Activate vehicle equipment and become trapped, for example
- Switch systems on or off and endanger other road users

Unsecured animals may be thrown around in the vehicle in the event of an accident or sudden steering and braking maneuvers and injure vehicle occupants in the process.

- ▶ Never leave animals in the vehicle unattended.
- ▶ Always correctly secure animals while driving, e.g. using a suitable animal carrier.

Risk due to modification, damage or wear to the components of the restraint system

⚠ **WARNING** Risk of injury or death due to modifications to the restraint system

Vehicle occupants may no longer be protected as intended if alterations are made to the restraint system.

- ▶ Never alter the parts of the restraint system.
- ▶ Never tamper with the wiring or any electronic component parts or their software.

If it is necessary to modify the vehicle to accommodate a person with disabilities, contact an authorized Mercedes-Benz Center for details.

USA only: for details, contact our Customer Assistance Center on 1-800-FOR-MERCedes (1-800-367-6372).

⚠ WARNING Risk of injury or death due to damaged or modified seat belts

Seat belts cannot provide protection in the following situations:

- The seat belt is damaged, has been modified, is extremely dirty, bleached or dyed
- The seat belt buckle is damaged or extremely dirty
- Modifications have been made to the Emergency Tensioning Device, seat belt anchorage or seat belt retractor

Seat belts may sustain non-visible damage in an accident, e.g. due to glass splinters.

Modified or damaged seat belts could tear or fail in the event of an accident, for example.

Modified Emergency Tensioning Devices could accidentally trigger or fail to function as intended.

- ▶ Never modify the seat belt system, for example the seat belt, seat belt buckle, Emergency Tensioning Device, seat belt anchorage and seat belt retractor.
- ▶ Make sure that the seat belts are undamaged, not worn and clean.
- ▶ Always have the seat belts checked immediately after an accident at a qualified specialist workshop.

Use only seat belts that have been approved for your vehicle by Mercedes-Benz.

⚠ WARNING Risk of injury due to modifications to the cover of an airbag

If you change the cover of an airbag or attach objects, e.g. even stickers, to it, the airbag may no longer function as intended.

- ▶ Never modify the cover of an airbag.
- ▶ Do not attach any objects to the cover.

The installation location of an air bag is identified by the AIRBAG symbol (→ page 110).

⚠ WARNING Risk of injury due to malfunctioning sensors in the door

The function of the airbags can be impaired due to modifications or incorrect work performed on the doors or door trim, or if the doors are damaged.

- ▶ Never modify the doors or parts of the doors.
- ▶ Always have work on the doors or door trim carried out at a qualified specialist workshop.

Risk due to components of the restraint system that have already been deployed
Mercedes-Benz recommends that you have the vehicle towed to a qualified specialist workshop after an accident.

WARNING Risk of burns from hot air bag components

The air bag parts are hot after an air bag has been deployed.

- Do not touch the air bag parts.
- Have a deployed air bag replaced at a qualified specialist workshop as soon as possible.

WARNING Risk of injury due to deployed airbag

A deployed airbag no longer offers any protection.

- Have the vehicle towed to a qualified specialist workshop in order to have the deployed airbag replaced.

Have deployed air bags replaced immediately.

WARNING Risk of injury or death from deployed pyrotechnic Emergency Tensioning Devices

Pyrotechnic Emergency Tensioning Devices that have been deployed are no longer operational and are unable to perform their intended protective function.

- Therefore, have deployed pyrotechnic Emergency Tensioning Devices immediately replaced at a qualified specialist workshop.

Seat belts

Releasing seat belts

- Press the release button in the seat belt buckle and guide the seat belt back with the seat belt tongue.

NOTE Damage caused by trapping the seat belt

If an unused seat belt is not fully retracted, it may become trapped in the door or in the seat mechanism.

- Always ensure that an unused seat belt is fully retracted.

Airbags

Overview of air bags

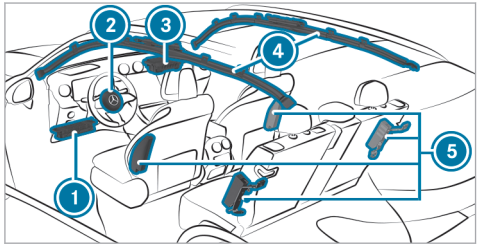

1. Knee air bag
2. Driver's air bag
3. Front passenger air bag
4. Window curtain air bag
5. Side impact air bag

The installation location of an air bag is identified by the AIRBAG symbol. An additional arrow symbol ▶ indicates the installation location for certain air bags.

Observe the information under "Overview of deployment situations" (→ page 104).

Brief overview of most important points

Safely transporting children in the vehicle

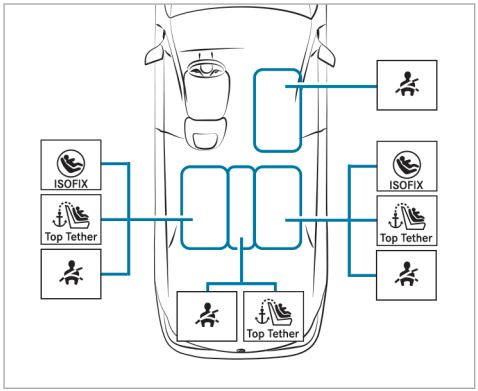

Always observe the following when transporting children:

- Do not leave children unsupervised in the vehicle (→ page 113).
- Secure children up to a height of 5 ft (1.50 m) on the respective seat (see illustration above) properly with a suitable and approved child restraint system , and secure small children in a rearward-facing child restraint system.
- Observe the child restraint system manufacturer's installation instructions.

Left/right rear seat (preferred seats)

Preferred securing system:

LATCH-type (ISOFIX) securing ring

and

Also secure Top Tether if present (→ page 121).

Alternative securing system:

Vehicle seat belt (→ page 122)

Additionally attach Top Tether if recommended by the manufacturer of the child restraint system (→ page 121).

Front passenger seat

Securing system:

Vehicle seat belt (→ page 122)

Be sure to observe:

- If the front passenger seat is occupied, ensure that the status of the front passenger air bag is correct for the current situation (→ page 98).

Center rear seat

Securing system:

Vehicle seat belt (→ page 122)

Additionally attach Top Tether if recommended by the manufacturer of the child restraint system (→ page 121).

Important safety notes

Basic information

Be diligent

Bear in mind that negligence when securing a child in the child restraint system may have seri-

ous consequences. Always be diligent in securing a child carefully before every journey.

Never allow babies and children to travel sitting on the lap of another vehicle occupant.

To improve protection for children younger than twelve years old or under 5 ft (1.50 m) in height, Mercedes-Benz recommends you observe the following information:

- Always secure a child in a child restraint system suitable for your Mercedes-Benz vehicle.
- The child restraint system must be appropriate to the age, weight and size of the child.
- The vehicle seat must be suitable for the child restraint system to be installed:

Accident statistics show that children secured on the rear seats are generally safer than children secured on the front seats. For this reason, Mercedes-Benz strongly advises that you install a child restraint system on a rear seat.

The generic term child restraint system

The generic term child restraint system is used in this Operator's Manual. A child restraint system is, for example:

- a baby car seat
- a rearward-facing child seat
- a forward-facing child seat
- a child booster seat – Mercedes-Benz recommends using a child booster seat **with** a backrest and seat belt guides.

Observe laws and legal requirements

Always observe the legal requirements when using a child restraint system in the vehicle.

Securing systems for child restraint systems in the vehicle

Only use the following securing systems for child restraint systems:

- the LATCH-type (ISOFIX) securing rings
- the vehicle's seat belt system
- the Top Tether anchorages

Simply attaching to the LATCH-type (ISOFIX) securing rings in the vehicle can reduce the risk of installing the child restraint system incorrectly.

When securing a child with the integrated seat belt of the ISOFIX/LATCH child restraint system, always comply with the permissible gross weight for the child and child restraint system (→ page 120).

A child booster seat may be necessary to achieve proper seat belt positioning for children over 40 lbs (18 kg) in weight or until they reach a height where a three-point seat belt can be installed properly without a child booster seat.

Mercedes-Benz recommends a suitable child booster seat with a backrest and seat belt guides.

Observe standards for child restraint systems

All child restraint systems must meet the following standards:

- U.S. Federal Motor Vehicle Safety Standards 213
- Canadian Motor Vehicle Safety Standards 213

Confirmation that the child restraint system complies with the standards can be found on an instruction label on the child restraint system. This confirmation can also be found in the installation instructions that are included with the child restraint system.

Important warning notices

Always secure a child restraint system correctly

WARNING Risk of injury or death due to incorrect installation of the child restraint system

The child can then not be protected or restrained as intended.

- Be sure to comply with the manufacturer's installation instructions for the child restraint system and its correct use.
- Make sure that the entire base of the child restraint system always rests on the sitting surface of the seat.
- Never place objects (e.g. cushions) under or behind the child restraint system.
- Use child restraint systems only with the original cover designed for them.
- Always replace damaged covers with genuine covers.

- Always observe the vehicle-specific information.
  - Installing the ISOFIX child restraint system on the right and left rear seats (→ page 120).
  - Securing the child restraint system with the seat belt (→ page 122).
- Observe the warning labels in the vehicle interior and on the child restraint system.

WARNING Risk of injury or death due to unsecured child restraint systems in the vehicle

If the child restraint system is incorrectly mounted or unsecured, it may come loose.

The child can then not be protected or restrained as intended.

Unused child restraint systems could be flung around and hit vehicle occupants.

- Always comply with the manufacturer's installation instructions for the child restraint system and its correct use.
- Always fit child restraint systems correctly, even if they are transported in the vehicle unused.

Do not modify the child restraint system

WARNING Risk of injury due to modifications to the child restraint system

The child restraint system can no longer function properly. This poses an increased risk of injury.

- Never modify a child restraint system.
- Only affix accessories which have been specially approved for this child restraint system by the child restraint system's manufacturer.

Use only child restraint systems that are in proper working condition

WARNING Risk of injury or death caused by the use of damaged child restraint systems

Child restraint systems or their retaining systems that have been subjected to stress in an accident may not be able to perform their intended protective function.

It may be the case that the child cannot be properly restrained.

- Always immediately replace child restraint systems that have been damaged or involved in an accident.
- Have the securing systems for the child restraint systems checked at a qualified specialist workshop before installing a child restraint system again.

Avoid direct sunlight

WARNING Risk of burns when the child seat is exposed to direct sunlight

If the child restraint system is exposed to direct sunlight or heat, parts could heat up excessively.

Children could suffer burns from these parts, particularly the metallic parts of the child restraint system.

- Always make sure that the child restraint system is not exposed to direct sunlight.
- Cover the child restraint system with a blanket, for example.
- If the child restraint system has been exposed to direct sunlight, allow it to cool before securing a child into it.
- Never leave children unattended in the vehicle.

Observe when stopping or parking

WARNING Risk of fatal injury due to exposure to extreme heat or cold in the vehicle

If persons, particularly children, are subjected to prolonged exposure to intense heat or cold, there is a risk of severe injury or even death.

- Never leave persons, particularly children, unattended in the vehicle.

WARNING Risk of accident and injury if children are left unattended in the vehicle

If children are left unattended in the vehicle, they could in particular:

- open doors, thereby endangering other persons or road users.
- get out and be struck by oncoming traffic.
- operate vehicle equipment and become trapped, for example.

In addition, the children could also set the vehicle in motion, for example by:

- releasing the parking brake.
- changing gear.
- starting the vehicle.

▶ Never leave children unattended in the vehicle.

▶ When leaving the vehicle, always take the SmartKey with you and lock the vehicle.

▶ Keep the SmartKey out of the reach of children.

Notes on rearward-facing and forward-facing child restraint systems on the front passenger seat

⚠ **WARNING** Risk of injury or fatal injury when using a rearward-facing child restraint system while the co-driver airbag is enabled

If you secure a child in a rearward-facing child restraint system on the co-driver seat and the PASSENGER AIR BAG OFF indicator lamp is off, the co-driver airbag can deploy in the event of an accident.

The child could be struck by the airbag.

▶ Always ensure that the co-driver airbag is disabled. The PASSENGER AIR BAG OFF indicator lamp must be lit.

▶ NEVER use a rearward-facing child restraint system on a seat with an ENABLED FRONT AIRBAG; DEATH or SERIOUS INJURY to the CHILD can occur.

Observe the specific instructions for the rearward-facing and forward-facing child restraint systems (→ page 117).

If it is absolutely necessary to install a child restraint system on the front passenger seat, always observe the following notes:

- When using a rearward-facing child restraint system on the front passenger seat, the front passenger air bag must always be disabled. This is only the case if the PASSENGER AIR BAG OFF indicator lamp is lit continuously (→ page 98).
- The front passenger air bag is enabled when the PASSENGER AIR BAG OFF indicator lamp is not lit. The front passenger air bag may be deployed during an accident. In that case, do not use rearward-facing child restraint systems.

Information on automatic front passenger air bag shutoff

If the front passenger seat is occupied, ensure, both before and during the journey, that the status of the front passenger air bag is correct for the current situation.

⚠ **WARNING** Risk of injury or death due to objects between the seat surface and the child restraint system

Objects between the seat surface and the child restraint system can interfere with the function of the automatic front passenger air bag shutoff.

- Do not place any objects between the seat surface and the child restraint system.
- Make sure that the entire base of the child restraint system rests on the seat cushion of the front passenger seat.
- The backrest of a forward-facing child restraint system must, as far as possible, be resting against the seat backrest of the front passenger seat.
- Always comply with the installation instructions from the child restraint system manufacturer.

When installing a child restraint system on the front passenger seat, observe the vehicle-specific information (→ page 115).

Rearward-facing child restraint system on the front passenger seat

If a rearward-facing child restraint system is installed on the front passenger seat, the front passenger air bag must be disabled. The PASSENGER AIR BAG OFF indicator lamp must be continuously lit (→ page 98).

WARNING Risk of injury or fatal injury when using a rearward-facing child restraint system while the co-driver airbag is enabled

If you secure a child in a rearward-facing child restraint system on the co-driver seat and the PASSENGER AIR BAG OFF indicator lamp is off, the co-driver airbag can deploy in the event of an accident.

The child could be struck by the airbag.

- Always ensure that the co-driver airbag is disabled. The PASSENGER AIR BAG OFF indicator lamp must be lit.
- NEVER use a rearward-facing child restraint system on a seat with an ENABLED FRONT AIRBAG; DEATH or SERIOUS INJURY to the CHILD can occur.

ⓘ Depending on the child restraint system and the stature of the child, the front passenger air bag will be enabled. The PASSENGER AIR BAG OFF indicator lamp will not light up.
The front passenger air bag may be deployed during an accident. If the front passenger air bag has this status, no rearward-facing child restraint system may be installed on the front passenger seat.
Instead, install the rearward-facing child restraint system on a suitable rear seat.

Forward-facing child restraint system on the front passenger seat

If a forward-facing child restraint system is installed on the front passenger seat, the front passenger air bag may be automatically enabled or disabled. The status of the front passenger air bag depends on the child restraint system and the stature of the child.

The PASSENGER AIR BAG OFF indicator lamp will either light up continuously or not light up (→ page 98). Always observe the following information.

⚠ **WARNING** Risk of injury or death due to incorrect positioning of the child restraint system

If you secure a child in a forward-facing child restraint system on the co-driver seat and you position the co-driver seat too close to the dashboard, in the event of an accident, the child could:

- come into contact with the vehicle's interior if the PASSENGER AIR BAG OFF indicator lamp is lit, for example
- be struck by the airbag if the PASSENGER AIR BAG OFF indicator lamp is off

▶ Always move the co-driver seat as far back as possible. In doing so, always make sure that the shoulder belt strap is correctly routed from the seat belt outlet of the vehicle to the shoulder belt guide on the child restraint system. The shoulder belt strap must be routed forwards and downwards from the seat belt outlet.

If necessary, adjust the seat belt outlet and the co-driver seat accordingly.

▶ Always comply with the child restraint system manufacturer's installation instructions.

Suitable child restraint systems for the transport of children

Information on the benefit of a rearward-facing child restraint system

Transport a baby in a suitable rearward-facing child restraint system only. It is also preferable to transport a small child in a suitable rearward-facing child restraint system. In this case, the child sits in the opposite direction to the direction of travel and faces backwards.

Babies and small children have comparatively weak neck muscles in relation to the size and weight of their head. The risk of injury to the cervical spine during an accident can be reduced in a rearward-facing child restraint system.

Securing the child restraint system

Adjusting the seat correctly

When installing a child restraint system on the left or right rear seat, always observe the following:

▶ Make sure that the child's feet do not touch the front seat. If necessary, move the front seat slightly forwards.

If the head restraint of the child restraint system cannot be fully extended when it is installed in the vehicle, this will result in restrictions on the maximum size setting for certain child restraint systems. Observe the child restraint system manufacturer's installation instructions.

ⓘ Contact with the roof when the head restraint is fully extended and locked in place will not result in any restrictions on use.

Also observe the following when installing an ISOFIX child restraint system:

▶ **When using a rearward-facing child restraint system on a rear seat:** adjust the front seat so

that it does not touch the child restraint system.

- **When using a forward-facing child restraint system with integrated child seat belt:** adjust the head restraint of the respective seat so that it does not push the child restraint system forwards. If necessary, the respective head restraint can be removed. In addition, the backrest of the child restraint system must lie as flat as possible against the backrest of the vehicle seat. After the child restraint system has been removed, replace the vehicle head restraint immediately and adjust it correctly.
- The child restraint system must not be put under strain between the roof and the seat cushion and/or be installed facing the wrong direction. Where possible, adjust the seat cushion angle accordingly.
- Adjust the vehicle head restraints so that the child restraint system is not put under strain by the head restraint.

When installing a belt-secured child restraint system, also observe the following:

- **When using a rearward-facing child restraint system on a rear seat:** adjust the front seat so that it does not touch the child restraint system.
- Also secure Top Tether if present (→ page 121).
- **When using a forward-facing child restraint system with integrated child seat belt:** adjust the head restraint of the respective seat so that it does not push the child restraint system forwards. If necessary, the respective head restraint can be removed. In addition, the backrest of the child restraint system must lie as flat as possible against the backrest of the vehicle seat. After the child restraint system has been removed, replace the vehicle head restraint immediately and adjust it correctly.
- The backrest of the forward-facing child restraint system must, as far as possible, be resting on the seat backrest of the rear seat.
- The child restraint system must not be put under strain between the roof and the seat cushion and/or be installed facing the wrong direction. Where possible, adjust the seat cushion angle accordingly.
- Adjust the vehicle head restraints so that the child restraint system is not put under strain by the head restraint.
- Make sure that the child's feet do not touch the front seat. If necessary, move the front seat slightly forwards.

Depending on the vehicle equipment, always observe the following when installing a belt-secured child restraint system on the front passenger seat:

- Observe the notes on rearward-facing and forward-facing child restraint systems on the front passenger seat (→ page 115).
- **When using a forward-facing child restraint system integrated child seat belt:** remove the head restraint from the front passenger seat, if possible. After the child restraint system has been removed, immediately replace the head restraint and adjust it correctly.

- The backrest of the forward-facing child restraint system must, as far as possible, be resting on the seat backrest of the front passenger seat.
- The child restraint system must not be put under strain between the roof and the seat cushion and/or be installed facing the wrong direction.
- Adjust the vehicle head restraints so that the child restraint system is not put under strain by the head restraint.
- Never place objects (e.g. cushions) under or behind the child restraint system.
- Set the front passenger seat as far back as possible and move the seat into the highest position if possible. Always make sure that the shoulder belt strap is correctly routed from the seat belt outlet of the vehicle to the shoulder belt guide on the child restraint system. The shoulder belt strap must be routed forwards from the seat belt outlet and, where possible, downwards to the child restraint system.
- Fully retract the seat cushion length adjustment.
- Adjust the seat cushion inclination so that the front edge of the seat cushion is in the highest position and the rear edge of the seat cushion is in the lowest position.
- Set the seat backrest to the most vertical position possible.

Activating or deactivating the special seat belt retractor of the seat belt

WARNING Risk of injury or death if a seat belt is unfastened while the vehicle is in motion

If the seat belt is released while the vehicle is in motion, the special seat belt retractor is deactivated and the child restraint system is no longer correctly secured. The seat belt is drawn in slightly by the inertia reel and cannot be immediately closed again.

- Stop the vehicle immediately in accordance with the traffic conditions.
- Activate the special seat belt retractor again and correctly secure the child restraint system.

When enabled, the child seat safety feature ensures that the seat belts of the front passenger seat and rear seats do not slacken once the child restraint system is secured.

The seat belts on the following seats are equipped with a child seat safety feature:

- Front passenger seat
- Rear seats

Installing a child restraint system

- When installing a child restraint system, always observe the manufacturer's installation and operating instructions as well as the information in this Operator's Manual.
- Pull the seat belt smoothly from the seat belt outlet.
- Engage the seat belt tongue in the belt buckle.

Activating the special seat belt retractor:

- ▶ Pull the seat belt out fully and let the inertia reel retract it again.
  When the special seat belt retractor is activated, you should hear a ratcheting sound.
- ▶ Push the child restraint system down until the seat belt sits tightly.

Deactivating the special seat belt retractor:

- ▶ Press the release button of the seat belt buckle.
- ▶ Hold the seat belt tongue and guide back to the seat belt outlet.

Installing an ISOFIX child restraint system

⚠ **WARNING** Risk of accident if the rear bench seat, rear seat and seat backrest are not engaged

The rear bench seat, rear seat and seat backrest may fold forwards, even when you are driving.

- As a result, the vehicle occupant will be pushed into the seat belt with increased force. The seat belt will not be able to protect as intended and could cause additional injury.
- Objects or loads in the trunk or cargo compartment will not be restrained by the seat backrest.

▶ Make sure that the rear bench seat, the rear seat and the seat backrest are engaged before every trip.

If the rear seat backrest is not engaged and locked in place, the red lock verification indicator will be visible.

⚠ **WARNING** Risk of injury or death if the permissible gross mass of the child and child restraint system together is exceeded.

Too much load may be placed on the LATCH-type (ISOFIX) or iSize child restraint systems and the child may not be restrained correctly in the event of an accident, for example.

▶ If the child is secured in a LATCH-type (ISOFIX) child restraint system with integrated seat belt, the total mass of the child and child restraint system must not exceed 73 lb (33 kg).

Always observe the information on the mass of the child:

- in the installation instructions and Operator's Manual of the manufacturer of the child restraint system used
- on a label on the child restraint system, if present

Regularly check that the permissible total mass of the child and child restraint system is still being adhered to.

When installing a child restraint system, also observe the following:

☑ Always observe the area of use and the suitability of the seats for attaching a child restraint system.

ISOFIX mounting brackets

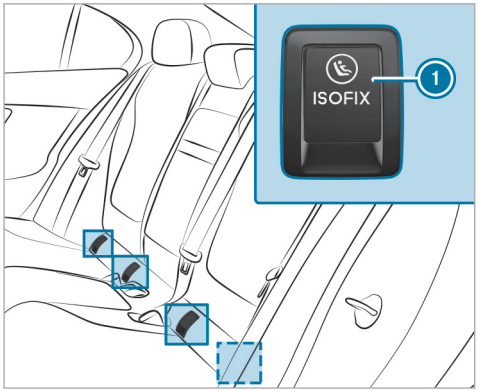

1 ISOFIX mounting bracket

Before every journey always ensure that the ISOFIX child restraint system is correctly engaged in both mounting brackets on the vehicle.

NOTE Damage to the seat belt for the center seat during installation of the child restraint system

- Make sure that the seat belt is not trapped.

- Fold the covers of the ISOFIX mounting brackets 1 back.
- Attach the ISOFIX child restraint system to both mounting brackets 1 in the vehicle.

Fastening a Top Tether

WARNING Risk of injury or death if the rear seat backrests are not locked after Top Tether belts are installed

The rear seat backrests may fold forwards when you are driving.

As a result, child restraint systems will no longer be able to perform their intended protective function. This may also cause additional injuries.

- Always lock rear seat backrests after installing Top Tether belts.
- Observe the lock verification indicator.

If the rear seat backrest is not engaged and locked in place, the red lock verification indicator will be visible.

If the child restraint system is equipped with a Top Tether belt:

The risk of injury may be reduced by Top Tether. The Top Tether belt enables an additional connection between the child restraint system attached with ISOFIX (left and right rear seats) or the seat belt (all rear seats) and the vehicle.

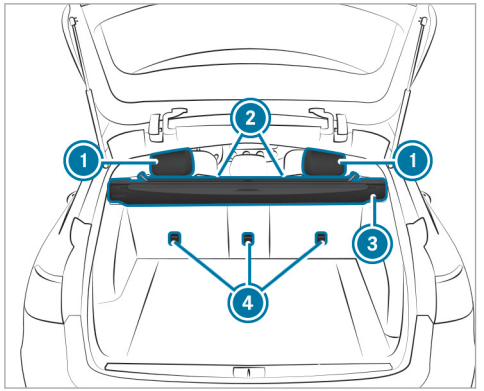

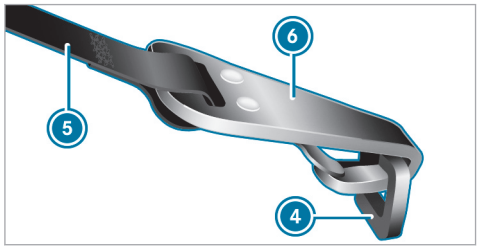

- If necessary, slide head restraint ① upwards (→ page 159).
- Install the ISOFIX/LATCH or belt-secured child restraint system with Top Tether. In doing so, comply with the child restraint system manufacturer's installation instructions.
- Guide Top Tether belt ⑤ under head restraint ① between the two head restraint bars.
- Guide Top Tether belt ⑤ downwards between cargo compartment cover ③ and seat backrest ②.
- Hook Top Tether hook ⑥ of Top Tether belt ⑤ into Top Tether anchorage ④ without twisting.
- Tension Top Tether belt ⑤. In doing so, comply with the child restraint system manufacturer's installation instructions.
- If necessary, slide head restraint ① downwards (→ page 159). Make sure that you do not interfere with the correct routing of Top Tether belt ⑤.

Securing the child restraint system with the seat belt

WARNING Risk of accident if the rear bench seat, rear seat and seat backrest are not engaged

The rear bench seat, rear seat and seat backrest may fold forwards, even when you are driving.

- As a result, the vehicle occupant will be pushed into the seat belt with increased force. The seat belt will not be able to protect as intended and could cause additional injury.
- Objects or loads in the trunk or cargo compartment will not be restrained by the seat backrest.

- Make sure that the rear bench seat, the rear seat and the seat backrest are engaged before every trip.

If the rear seat backrest is not engaged and locked in place, the red lock verification indicator will be visible.

The seat belts on the following seats are equipped with a special seat belt retractor:

- Front passenger seat
- Rear seats

When enabled, the special seat belt retractor ensures that the seat belts of the front passenger seat and rear seats do not slacken once the child restraint system is secured.

▶ For a child restraint system of the category "Universal" or "Semi-Universal" ensure that this is approved for the vehicle seat.

▶ Install the child restraint system.
The entire base of the child restraint system must always rest on the sitting surface of the seat.

▶ Always make sure that the shoulder belt strap is correctly routed from the seat belt outlet of the vehicle to the shoulder belt guide on the child restraint system.
The shoulder belt strap must be routed forwards from the seat belt outlet and, where possible, downwards to the child restraint system.

▶ **When installing on the rear seat:** also secure Top Tether, if present.

▶ **When installing on the front passenger seat:** if necessary, adjust the belt sash guide and the front passenger seat appropriately.

Child safety locks

Activating or deactivating the child safety lock for the rear doors

⚠ **WARNING** Risk of accident and injury if children are left unattended in the vehicle

If children are left unattended in the vehicle, they could in particular:

- open doors, thereby endangering other persons or road users.
- get out and be struck by oncoming traffic.
- operate vehicle equipment and become trapped, for example.

In addition, the children could also set the vehicle in motion, for example by:

- releasing the parking brake.
- changing gear.
- starting the vehicle.

▶ Never leave children unattended in the vehicle.

▶ When leaving the vehicle, always take the SmartKey with you and lock the vehicle.

▶ Keep the SmartKey out of the reach of children.

⚠ **WARNING** Risk of fatal injury due to exposure to extreme heat or cold in the vehicle

If persons, particularly children, are subjected to prolonged exposure to intense heat or cold, there is a risk of severe injury or even death.

▶ Never leave persons, particularly children, unattended in the vehicle.

WARNING Risk of accident and injury due to children left unattended in the vehicle

If children are traveling in the vehicle, they could, in particular:

- Open doors, thereby endangering other persons or road users.
- Get out and be struck by oncoming traffic.
- Operate vehicle equipment and become trapped, for example.

▶ Always activate the installed child safety locks if children are traveling in the vehicle.

▶ Never leave children unattended in the vehicle.

▶ When leaving the vehicle, always take the SmartKey with you and lock the vehicle.

There are child safety locks for the rear doors and the rear side windows.
The child safety lock on the rear doors secures each door separately. The doors can no longer be opened from the inside.

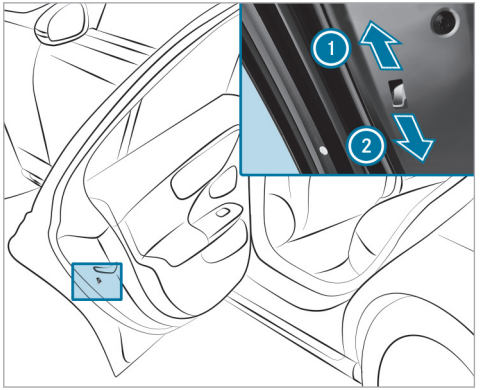

▶ Press the lever in direction 1 (activate) or 2 (deactivate).

▶ Make sure that the child-proof locks are working properly.

Activating and deactivating the child safety lock for the rear side windows

WARNING Risk of accident and injury if children are left unattended in the vehicle

If children are left unattended in the vehicle, they could in particular:

- open doors, thereby endangering other persons or road users.
- get out and be struck by oncoming traffic.
- operate vehicle equipment and become trapped, for example.

In addition, the children could also set the vehicle in motion, for example by:

- releasing the parking brake.
- changing gear.
- starting the vehicle.

▶ Never leave children unattended in the vehicle.

▶ When leaving the vehicle, always take the SmartKey with you and lock the vehicle.

▶ Keep the SmartKey out of the reach of children.

⚠ **WARNING** Risk of fatal injury due to exposure to extreme heat or cold in the vehicle

If persons, particularly children, are subjected to prolonged exposure to intense heat or cold, there is a risk of severe injury or even death.

▶ Never leave persons, particularly children, unattended in the vehicle.

⚠ **WARNING** Risk of accident and injury due to children left unattended in the vehicle

If children are traveling in the vehicle, they could, in particular:

- Open doors, thereby endangering other persons or road users.
- Get out and be struck by oncoming traffic.
- Operate vehicle equipment and become trapped, for example.

▶ Always activate the installed child safety locks if children are traveling in the vehicle.

▶ Never leave children unattended in the vehicle.

▶ When leaving the vehicle, always take the SmartKey with you and lock the vehicle.

There are child safety locks for the rear doors and the rear side windows.

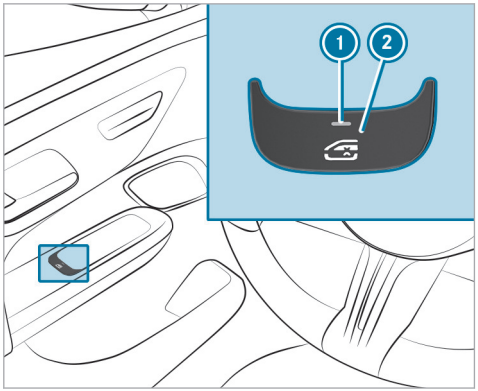

▶ **To activate/deactivate:** press button ②.

The rear side window can be opened or closed in the following cases:

- Indicator lamp ① is lit: via the switch on the driver's door
- Indicator lamp ① is off: via the switch on the corresponding rear door or driver's door

Occupant presence reminder

Function of the occupant presence reminder

The occupant presence reminder can help to remind you about a child who may have been forgotten in the rear passenger compartment of the vehicle. It activates and deactivates automatically when a rear door is open for an extended period of time and a child, which the system presumes to be present, could enter or exit the vehicle.

When the vehicle is switched off, the Do Not Leave People or Animals in the Vehicle message will appear on the driver's display if the system has previously activated automatically.

You can permanently deactivate the function in the multimedia system (→ page 126). When the system is deactivated, the [OFF] indicator lamp on the driver's display lights up.

Activating or deactivating the occupant presence reminder in the multimedia system

Multimedia system:

→ [⌂] ▸▸ Settings ▸▸ Vehicle ▸▸ Occupant Protection

▶ Activate or deactivate the function.

SmartKey

Overview of key functions

WARNING Risk of accident and injury due to children left unattended in the vehicle

If you leave children unattended in the vehicle, they could, in particular:

- open doors, thereby endangering other persons or road users.
- get out and be struck by oncoming traffic.
- operate vehicle equipment and become trapped, for example.

In addition, the children could also set the vehicle in motion by, for example:

- releasing the parking brake.
- changing the gearbox position.
- starting the vehicle.

▶ Never leave children unattended in the vehicle.

▶ When leaving the vehicle, always take the key with you and lock the vehicle.

▶ Keep the key out of reach of children.

NOTE Damage to the SmartKey caused by magnetic fields

▶ Keep the SmartKey away from strong magnetic fields.

Vehicle key with panic alarm

1. Opens/closes the tailgate
2. Unlocks (with embossed surface)
3. Locks
4. Indicator lamp
5. Panic alarm

ⓘ If indicator lamp 4 does not light up after you press the [ ] or [ ] button, the battery is weak or possibly discharged. Replace the battery as soon as possible.

Replace the key battery (→ page 129).

The key locks and unlocks the following components:

- Doors
- Fuel filler flap
- Socket flap (plug-in hybrid)
- Tailgate

If the vehicle is not opened within approximately 40 seconds after unlocking, it will lock again. Anti-theft protection will be armed again.

Do not keep the key together with electronic devices or metal objects. This may affect the key's functionality.

Activating/deactivating the acoustic locking verification signal

Multimedia system:

→ [⌂] ▸▸ Settings ▸▸ Vehicle ▸▸ Open/Close

▶ Activate or deactivate the Acoustic Lock.

Activating/deactivating the panic alarm

Requirements

- The vehicle is switched off.

▶ **To activate:** press button ① for approximately one second.
A visual and audible alarm is triggered.

▶ **To deactivate:** briefly press button ① again.

or

▶ Press the start/stop button.
A key belonging to the vehicle must be detected in the vehicle.

Changing the unlocking settings

Possible unlocking functions of the key:

- Central unlocking
- Unlocking the driver's door and fuel filler flap
- **Plug-in hybrid:** unlocking the driver's door and fuel filler flap/socket flap

▶ **To switch between settings:** press the [🔒] and [⊛] buttons simultaneously for approximately six seconds until the indicator lamp flashes twice.

Options if the unlocking function for the driver's door and fuel filler flap has been selected:

- **To unlock the vehicle centrally:** press the [🔒] button twice.
- **Vehicles with KEYLESS-GO:** if you touch the inner surface of the door handle on the driver's door, only the driver's door and the fuel filler flap are unlocked.

Options if the unlocking function for the driver's door and fuel filler flap / socket flap has been selected (plug-in hybrid):

- **To unlock the vehicle centrally:** press the [🔒] button twice.
- **Vehicles with KEYLESS-GO:** if you touch the inner surface of the door handle on the driver's door, only the driver's door and the fuel filler flap / socket flap are unlocked.

Deactivating the function of the key

Vehicles with KEYLESS-GO: if you deactivate the function of the SmartKey, the KEYLESS-GO functions will also be deactivated. Access or drive

authorization by KEYLESS-GO will then no longer be possible with that particular SmartKey. Activate the function of the SmartKey so that all its functions will again be available.

You can also deactivate the function of the SmartKey to reduce the energy consumption of the SmartKey if you do not use the vehicle or a SmartKey for an extended period of time.

▶ Press and hold the button on the SmartKey.

▶ With the key button pressed, immediately press key button twice in quick succession.
The indicator light of the key lights up once briefly and once for a long time.

ⓘ The following options for re-activating the SmartKey are available:

- Press any button on the SmartKey.
- Start the vehicle with the SmartKey in the marked space in the center console (→ page 232).

Removing/inserting the mechanical key

Removing the mechanical key

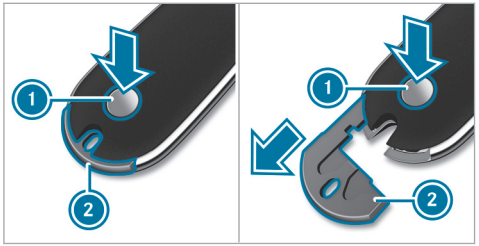

▶ Press release button ①.
Emergency key ② is pushed out slightly.

▶ Fully remove mechanical key ②.

Inserting the mechanical key

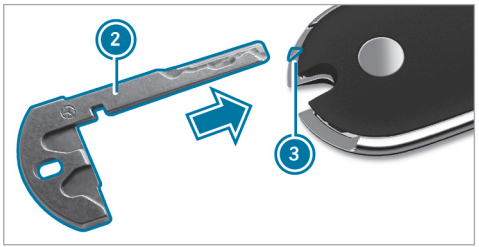

▶ Insert mechanical key ② at marking ③ until it engages.

ⓘ You can use mechanical key ② to attach the key to a key ring.

Replacing the key battery

⚠ **DANGER** Risk of fatal injuries due to swallowing batteries

Batteries contain toxic and corrosive substances. If batteries are swallowed or otherwise

enter the body, severe internal burns can occur within two hours.

There is a risk of fatal injury.

- ▶ Keep batteries out of the reach of children.
- ▶ If the battery compartment cover and/or lid do not close securely, stop using the key and keep it away from children.
- ▶ If batteries are swallowed or otherwise enter the body, seek immediate medical attention.

ENVIRONMENTAL NOTE Environmental damage due to improper disposal of batteries

Batteries contain pollutants. It is illegal to dispose of them with the household rubbish.

▶ Dispose of batteries in an environmentally responsible manner. Take discharged batteries to a qualified specialist workshop or to a collection point for used batteries.

Requirements

- You require a CR 2032 3 V cell battery.

Mercedes-Benz recommends that you have the battery replaced at a qualified specialist workshop.

▶ Remove the emergency key (→ page 129).

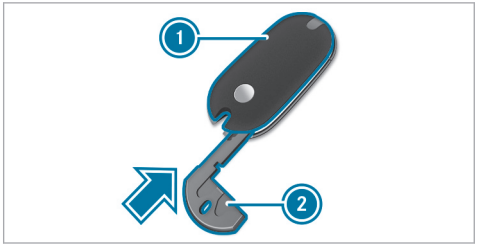

▶ Press emergency key ② into the opening in the key in the direction of the arrow until cover ① opens. When doing so, do not hold cover ① closed.

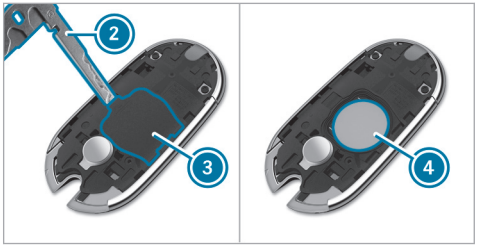

- ▶ Insert emergency key ② into the opening and lift up covering ③ and remove it.
- ▶ Repeatedly tap the key against your palm until battery ④ falls out of the key.
- ▶ Insert the new battery with the positive pole facing upwards. Use a lint-free cloth to do so.
- ▶ Make sure that the surface of the battery is free of lint, grease and other impurities.
- ▶ Insert the front tabs of covering ③ into the housing and then press on both sides to close it.
- ▶ Make sure that covering ③ is completely closed.
- ▶ Insert the front tabs of cover ① into the housing and then press until it is completely closed.
- ▶ Insert the emergency key again (→ page 129).

Problems with the key, troubleshooting

You can no longer lock or unlock the vehicle

Possible causes are:

- The key battery is weak or discharged.

- ▶ Check the battery using the indicator lamp (→ page 127).
- ▶ Replace the key battery, if necessary (→ page 129).
- ▶ Use the replacement key.
- ▶ Use the mechanical key to lock or unlock (→ page 134).
- ▶ Have key checked at a qualified specialist workshop.

There is interference from a powerful radio signal source

Possible causes if the function of the key is impaired:

- high voltage power lines
- mobile phones
- electronic devices (notebooks, tablets)
- shielding due to metal objects or induction loops for electrical gate systems or automatic barriers

- ▶ Make sure that there is sufficient distance between the key and the potential source of interference.

You have lost a key

- ▶ Have the key deactivated at a qualified specialist workshop.
- ▶ If necessary, have the mechanical lock replaced as well.

Doors

Unlocking/opening the doors from the inside

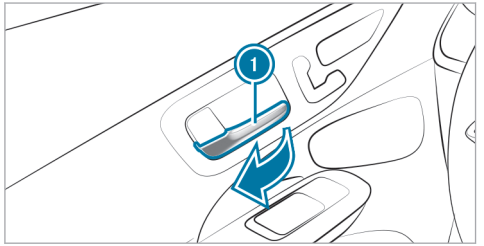

- **To unlock and open a front door:** pull door handle (1).
- **To unlock a rear door:** pull the rear door handle.
- **To open a rear door:** pull the rear door handle again.

Centrally locking and unlocking the vehicle from the inside

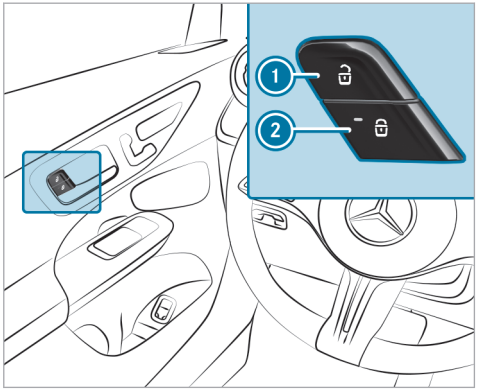

- **To unlock:** press button (1).
- **To lock:** press button (2).
  The red indicator lamp on button (2) will light up once the vehicle is locked.

(i) The buttons are also on the front passenger and rear doors.

This does not lock or unlock the fuel filler flap.

Plug-in hybrid: the socket flap is also locked and unlocked. The socket flap can be opened even if a SmartKey is detected in the vehicle.

The vehicle will not be unlocked:

- if you have locked the vehicle using the SmartKey
- if you have locked the vehicle using KEYLESS-GO

Locking/unlocking the vehicle with KEYLESS-GO

Requirements

- The key is outside the vehicle.
- The distance between the key and the vehicle does not exceed 3 ft (1 m).
- The driver's door and the door at which the door handle is used are closed.

! **NOTE** Vehicle damage due to unintentional opening of the tailgate

- When using an automatic car wash

- When using a high pressure cleaner

▶ Deactivate the function of the SmartKey in these situations.

or

▶ Make sure that the SmartKey is at a minimum distance of 10 ft (3 m) away from the vehicle.

Observe the information:

- on washing the vehicle in a car wash (→ page 30)
- on using a power washer (→ page 568)

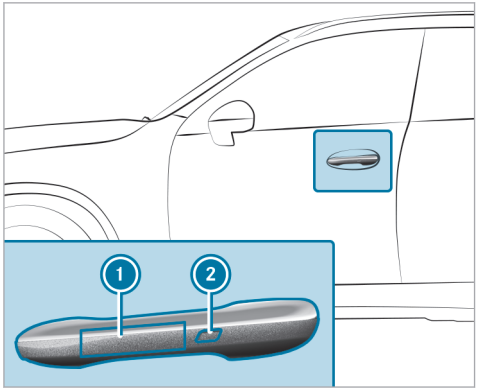

▶ **To unlock the vehicle:** touch the inside surface of the door handle.

▶ **To lock the vehicle:** touch the sensor surface ① or ②.

▶ **Convenience closing:** touch the recessed sensor surface ② for a prolonged period.

ⓘ Further information on convenience closing (→ page 144).

Problems with KEYLESS-GO, troubleshooting

You can no longer lock or unlock the vehicle using KEYLESS-GO

Possible causes:

- The function of the SmartKey has been deactivated.
- The SmartKey battery is weak or discharged.

▶ Activate the function of the SmartKey (→ page 58).

▶ Check the battery using the indicator lamp (→ page 127).

▶ Replace the SmartKey battery, if necessary (→ page 129).

▶ Use the replacement SmartKey.

▶ Use the emergency key to lock or unlock (→ page 134).

▶ Have the vehicle and SmartKey checked at a qualified specialist workshop.

There is interference from a powerful radio signal source

Possible causes if the function of KEYLESS-GO is impaired:

- High voltage power lines
- Mobile phones
- Electronic devices (notebooks, tablets)
- Shielding due to metal objects or induction loops for electrical gate systems or automatic barriers

▶ Make sure that there is sufficient distance between the SmartKey and the potential source of interference.

Activating/deactivating automatic locking in the MBUX multimedia system

Multimedia system:

⟶ [⌂] ▸▸ Settings ▸▸ Vehicle ▸▸ Open/Close

ⓘ The vehicle is locked automatically when the vehicle is switched on and the wheels are turning faster than walking pace.

▶ Activate or deactivate Automatic Door Lock.

In the following situations, there is a danger of being locked out when the function is activated:

- The vehicle is being towed or pushed.
- If the vehicle is being tested on a roller dynamometer.

Locking/unlocking the vehicle with the emergency key

Unlocking a left-hand vehicle door with the emergency key

ⓘ If you unlock and open the driver's door with the emergency key, this triggers the anti-theft alarm system.

ⓘ If you unlock the driver's door with the emergency key, the tailgate will not be unlocked.

ⓘ Information regarding starting the vehicle with the key in the storage compartment (emergency operation mode) (→ page 232).

▶ Remove the emergency key (→ page 129).

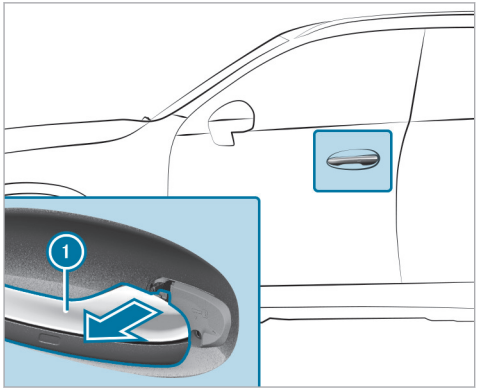

▶ Pull and hold the door handle ①.

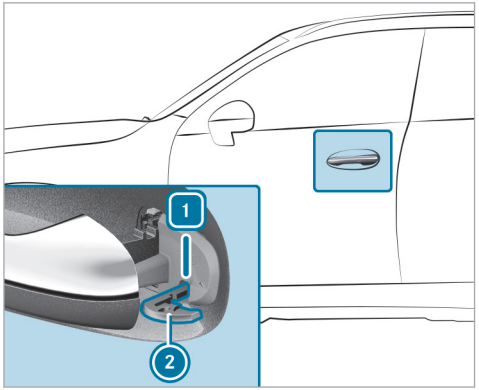

▶ Insert the emergency key ② into the lock cylinder as shown.

▶ Turn the emergency key ② counter-clockwise to position [1].

▶ Turn the emergency key ② back to its starting position.

▶ Remove the emergency key ② and release the door handle ①.

Locking the doors

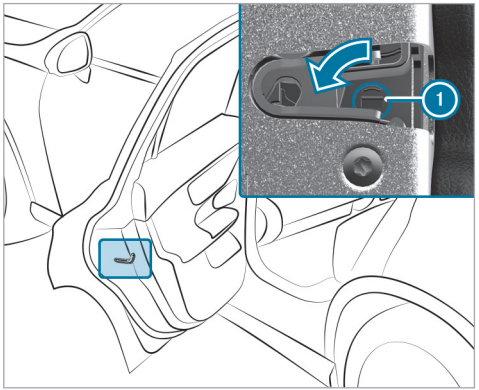

▶ Insert a suitable object, e.g. the emergency key, into opening ① on the door lock.

▶ **To lock the left-hand side of the vehicle:** turn the emergency key counter-clockwise as far as it will go.

▶ **To lock the right-hand side of the vehicle:** turn the emergency key clockwise as far as it will go.

If the locked door is closed, it can no longer be opened from the outside.

Running boards

Notes on running boards

Your vehicle is equipped with running boards. Observe the following instructions for using the running boards.

Keep the running boards and footwear free of dirt and step only on the studded area. This will make your footing safer.

! NOTE Damage to the vehicle body or underbody due to low ground clearance

The running boards are attached to the vehicle body via the underbody. This limits the ground clearance.

▶ Drive over obstacles, such as curbs, particularly carefully and slowly.

Cargo compartment

Opening the tailgate

⚠ DANGER Risk of exhaust gas poisoning

Combustion engines emit poisonous exhaust gases such as carbon monoxide. Exhaust gases can enter the vehicle interior if the tailgate is open when the engine is running, especially if the vehicle is in motion.

▶ Always switch off the engine before opening the tailgate.

▶ Never drive with the tailgate open.

! NOTE Damage to the tailgate caused by obstacles above the vehicle

The tailgate swings rearwards and upwards when it is opened.

▶ Make sure that there is sufficient space behind and above the tailgate.

▶ If the tailgate is unlocked, pull the tailgate handle and release it again immediately.

▶ **Vehicles with HANDS-FREE ACCESS:** Make a kicking movement with your foot below the bumper (→ page 139).

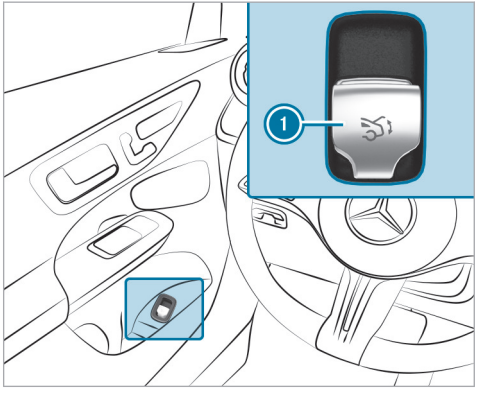

▶ Pull remote operating switch ① until the tailgate opens.

or

▶ Press and hold the [ ] button on the key.

▶ If the tailgate has stopped in an intermediate position, pull it upwards. Release it as soon as it begins to open.

If an obstacle obstructs the tailgate during the automatic opening process, blockage detection will stop the tailgate. The automatic blockage detection function is only an aid. It is not a substitute for you having to pay attention.

Closing the tailgate

⚠ **WARNING** Risk of injury from unsecured items in the vehicle

If objects, luggage or loads are not secured or not secured sufficiently, they could slip, tip over or be thrown around and thereby hit vehicle occupants.

There is a risk of injury, particularly in the event of sudden braking or a sudden change in direction.

▶ Always stow objects in such a way that they cannot be thrown around.

▶ Before the journey, secure objects, luggage or loads against slipping or tipping over.

Observe the notes on loading the vehicle.

Notes on closing the tailgate: your vehicle is equipped with automatic key recognition.

Note that the tailgate will not be locked in the following situation:

- You have locked the vehicle and closed the tailgate while a key belonging to the vehicle is inside the vehicle and is detected.

  and

- A second key belonging to the vehicle is not detected outside the vehicle.

Automatic key recognition is only an aid and is not a substitute for your attentiveness.

▶ Before locking, ensure that at least one key belonging to the vehicle is outside the vehicle.

▶ **To close the tailgate:** pull the tailgate downwards slightly. Release it as soon as it begins to close.

⚠ **WARNING** Risk of becoming trapped during automatic closing of the tailgate

Parts of the body could become trapped. There may be people in the closing area.

▶ Make sure that nobody is in the vicinity of the closing area during the closing process.

Use one of the following options to stop the closing process:

- Press the [ ] button on the SmartKey.
- Press or pull the remote operating switch on the driver's door.
- Press the closing or locking button on the tailgate.
- Pull the tailgate handle.

Vehicles with HANDS-FREE ACCESS: it is also possible to stop the closing process by making a kicking movement below the rear bumper.

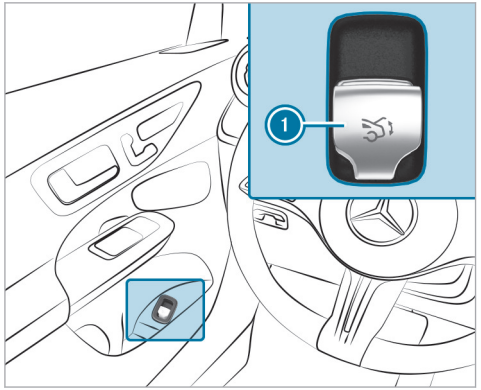

- Switch on the power supply or the vehicle.
- Push remote operating switch ① until the tailgate is fully closed.

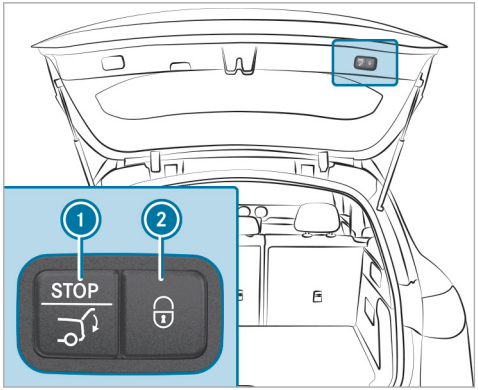

- Press closing button ① on the tailgate.

Vehicles with KEYLESS-GO

- Press locking button ② on the tailgate.
  If a key is detected outside the vehicle, the tailgate will close and the vehicle will be locked.
- Press and hold the [ ] button on the key.
  The key must be in the vicinity of the vehicle.

Vehicles with HANDS-FREE ACCESS

- Make a kicking movement with your foot below the bumper (→ page 139).

Automatic reversing function for the tailgate

The tailgate is equipped with automatic blockage detection with a reversing function. If an obstacle obstructs the tailgate during the automatic closing process, it will automatically open again slightly. Automatic blockage detection with the reversing function is only an aid and is not a substitute for your attentiveness.

- During the closing process, make sure that no body parts are in the closing area.

⚠ WARNING Risk of becoming trapped despite reversing function

The reversing function will not react:

- To soft, light and thin objects, e.g. fingers.
- Towards the end of the closing procedure.

In these situations in particular, the reversing function cannot prevent someone being trapped.

▶ Make sure that no body parts are in the closing area.

If someone is trapped, either:

- Press the [ ] button on the SmartKey.
- Press or pull the remote operating switch on the driver's door.
- Press the closing or locking button on the tailgate.
- Pull the tailgate handle.

HANDS-FREE ACCESS function

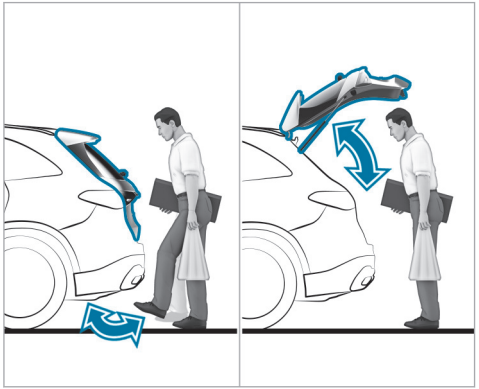

HANDS-FREE ACCESS allows you to open and close the tailgate, or even stop the opening and closing process at any point, by performing a kicking motion under the rear bumper. The transmission must be in position [P] for this function.

The kicking motion triggers the opening or closing process alternately.

- If you stop the tailgate opening process with a kicking motion, the tailgate is closed with the next kicking motion
- If you stop the tailgate closing process with a kicking motion, the tailgate is opened with the next kicking motion

In the following cases, the tailgate can be closed only with HANDS-FREE ACCESS:

- If the vehicle is switched on and the key's unlock function has been set so that only the driver's door is unlocked when activated (→ page 128).
- If the vehicle has been centrally locked from the inside (→ page 132).

Observe the notes when opening (→ page 136) and closing (→ page 137) the tailgate.

ⓘ Two warning tones sound when the tailgate is opening or closing.

WARNING Risk of burns caused by a hot exhaust system

The vehicle exhaust system can become very hot. If you use HANDS-FREE ACCESS, you could burn yourself by touching the exhaust system.

▶ Always ensure that you only make a kicking movement within the detection range of the sensors.

NOTE Vehicle damage due to unintentional opening of the tailgate or a door

- When using an automatic car wash
- When using a high pressure cleaner

▶ Deactivate the function of the SmartKey in these situations.

or

▶ Make sure that the SmartKey is at a minimum distance of 10 ft (3 m) (power washer) or 20 ft (6 m) (automatic car wash) away from the vehicle.

Ensure that you are standing firmly on the ground when performing the kicking motion. You could otherwise lose your balance, e.g. on ice.

Observe the following notes:

- The key is behind the vehicle.

  If the key is not recognized:

  - Take the key in your hand.

    or

  - Ensure that the function of the key is activated (→ page 58).
- Stand at least 12 in (30 cm) away from the vehicle when performing the kicking motion.
- Do not come into contact with the bumper when performing the kicking motion.
- Do not carry out the kicking motion too slowly.
- The kicking motion must be towards the vehicle and back again.
- **Vehicles with trailer hitch:** Perform the kicking motion to the left or right of the ball head.

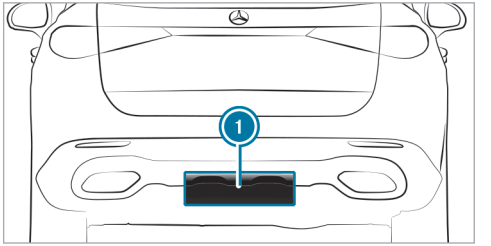

1 Detection range of the sensors

If several consecutive kicking motions are not successful, wait ten seconds.

System limits

The system may be impaired or inoperative in the following cases:

- The sensors are dirty, e.g. due to road salt or snow.
- The kicking motion is made using a prosthetic leg.

The tailgate can open or close unintentionally in the following situations:

- A person's arms or legs are moving in the sensor detection range, e.g. when polishing the vehicle or picking up objects.
- Objects are moved or placed behind the vehicle, e.g. the hose of a fuel dispenser, a charging cable or luggage
- Tension belts, tarps or other covers are pulled over the bumper.
- A protective mat with a length reaching over the loading sill down into the detection range of the sensors is used.
- The protective mat is not secured correctly.
- **Vehicles with trailer hitch:** Work is being carried out on the trailer hitch, trailers or rear bicycle racks.

Deactivate the function of the key (→ page 58) or do not carry the key about your person in such situations.

Limiting the opening angle of the tailgate

Activating the opening angle limiter

You can limit the opening angle of the tailgate in the top half of its opening range up to a point shortly before the end position.

▶ Stop the opening procedure of the tailgate at the desired position.

▶ Press and hold the closing button on the tailgate until you hear a short tone.
The opening angle limiter will be activated. The tailgate will then stop in the stored position when opened.

Fully opening the tailgate after it has stopped automatically

▶ Pull the handle on the outside of the tailgate again.

Deactivating the opening angle limiter

▶ Press and hold the closing button on the tailgate until two short tones sound.

Unlocking the tailgate with the emergency key

Requirements:

- The rear seat backrest has been folded forward.
- The cargo compartment cover has been removed.

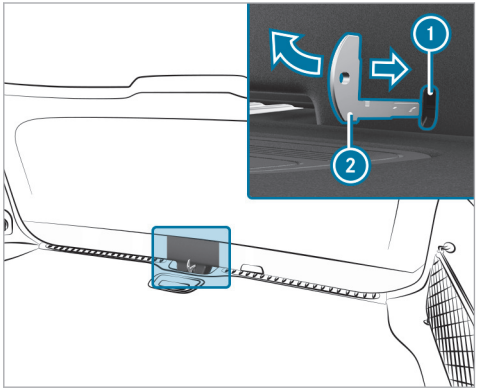

▶ Remove the emergency key (→ page 129).

▶ Insert emergency key ② into opening ① in the trim and push it in the direction of the arrow.
The tailgate will be unlocked.

Side windows

Opening and closing the side windows

⚠ WARNING Risk of entrapment when opening a side window

When opening a side window, parts of the body could be drawn in or become trapped between the side window and window frame.

▶ When opening, make sure that nobody is touching the side window.

▶ If someone is trapped, release the button immediately or pull it in order to close the side window again.

⚠ WARNING Risk of becoming trapped when closing a side window

When closing a side window, body parts could be trapped in the closing area in the process.

▶ When closing, make sure that no body parts are in the closing area.

▶ If someone is trapped, release the button immediately or press the button in order to reopen the side window.

⚠ WARNING Risk of becoming trapped when children operate the side windows

Children could become trapped if they operate the side windows, particularly when unattended.

▶ Activate the child safety lock for the rear passenger compartment side windows.

▶ When leaving the vehicle, always take the SmartKey with you and lock the vehicle.

▶ Never leave children unattended in the vehicle.

Requirements:

- The power supply or the vehicle has been switched on.

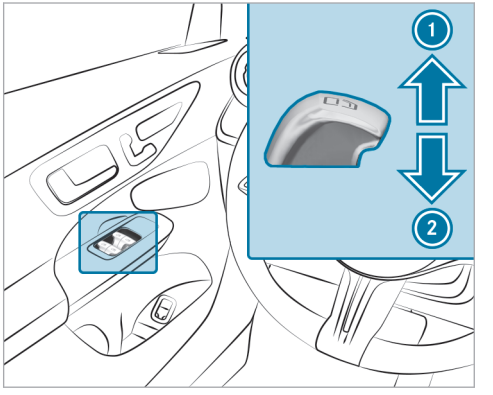

① Closing
② Opening

The buttons on the driver's door take precedence.

- **To start automatic operation:** press the [ ] button beyond the pressure point or pull and release it.
- **To interrupt automatic operation:** press or pull the [ ] button again.

When the vehicle is switched off, you can continue to operate the side windows.

This function is available for around four minutes or until a front door is opened.

Automatic reversing function of the side windows
If an obstacle impedes a side window during the closing process, the side window will open again automatically. The automatic reversing function is only an aid and is not a substitute for your attentiveness.

- During the closing process, make sure that no body parts are in the closing area.

WARNING Risk of becoming trapped despite there being reversing protection on the side window

The reversing function does not react:

- To soft, light and thin objects, e.g. fingers.
- During resetting.

The reversing function cannot prevent someone from becoming trapped in these situations.

- During the closing process, make sure that no body parts are in the closing area.
- If someone becomes trapped, press the [ ] button to open the side window again.

Convenience opening (ventilating the vehicle before starting a journey)

WARNING Risk of entrapment when opening a side window

When opening a side window, parts of the body could be drawn in or become trapped between the side window and window frame.

- When opening, make sure that nobody is touching the side window.
- Release the button immediately if somebody becomes trapped.

Requirements

- The SmartKey is in the immediate vicinity of the vehicle.

- Press and hold the [ ] button on the SmartKey.

  The following functions will be performed:

  - The vehicle will be unlocked.
  - The side windows will be opened.

- The panoramic sliding sunroof will be opened.
- The driver's seat ventilation will be switched on

ⓘ If the roller sunblind of the panoramic sliding sunroof is closed, the roller sunblind will be opened first.

▶ **To interrupt convenience opening:** release the [ ] button.

▶ **To continue convenience opening:** press and hold the [ ] button again.

Convenience closing (closing the vehicle from outside)

⚠ **WARNING** Risk of entrapment due to not paying attention during convenience closing

When the convenience closing feature is operating, parts of the body could become trapped in the closing area of the side window and the sliding sunroof.

▶ When the convenience closing feature is operating, monitor the entire closing process and make sure that no body parts are in the closing area.

Requirements

- The SmartKey is in the immediate vicinity of the vehicle.

▶ Press and hold the [ ] button on the SmartKey.

The following functions will be performed:

- The vehicle will be locked.
- The side windows will be closed.
- The panoramic sliding sunroof will be closed.

▶ **To interrupt convenience closing:** release the [ ] button.

▶ **To continue convenience closing:** press and hold the [ ] button again.

ⓘ Convenience closing also functions with KEYLESS-GO (→ page 132).

Resolving problems with the side windows

⚠ **WARNING** Risk of becoming trapped or fatally injured if reversing protection is not activated

If you close a side window again immediately after it has been blocked, the side window will close with increased or maximum force. The reversing function is then not active and body parts may become trapped.

▶ Make sure that no parts of the body are in the closing area.

▶ To stop the closing process, release the button or press the button again to reopen the side window.

A side window cannot be closed and you cannot see the cause.

▶ Check to see whether any objects are in the window guide.

▶ Adjust the side windows.

Adjusting the side windows

If a side window is obstructed during closing and reopens again immediately:

▶ Immediately after this, pull and hold the corresponding button again until the side window has closed and hold the button for at least one more second (re-adjustment).
The side window will be closed without the automatic reversing function.

If the side window is obstructed again and reopens again immediately:

▶ Immediately after this, pull and hold the corresponding button again until the side window has closed and hold the button for at least one more second (follow-up adjustment).
The side window will be closed without the automatic reversing function.

The side windows cannot be opened or closed using the convenience opening feature.

Possible causes are:

- The key battery is weak or discharged.

▶ Check the battery using the indicator lamp (→ page 127).

▶ Replace the key battery, if necessary (→ page 129).

Sliding sunroof

Opening and closing the sliding sunroof

ⓘ The term "sliding sunroof" refers to the panorama roof with power tilt/sliding panel.

⚠ **WARNING** Risk of becoming trapped when the sliding sunroof is being opened and closed

Body parts may become trapped in the range of movement.

▶ During the opening and closing process, make sure that no body parts are in the sweep of the sliding sunroof.
▶ If someone is trapped, release the control panel immediately.

or

▶ Touch the control panel during automatic operation.
The opening/closing process will be stopped.

⚠ **WARNING** Risk of becoming trapped if the sliding sunroof is operated by children

Children operating the sliding sunroof could get caught in the moving parts, particularly if unattended.

▶ Never leave children unattended in the vehicle.
▶ When leaving the vehicle, always take the key with you and lock the vehicle.

⚠ **WARNING** Risk of becoming trapped when the roller sunblind is being opened and closed

Body parts may become trapped between the roller sunblind and frame or sliding roof.

- ▶ During the opening or closing process, make sure that no body parts are in the roller sunblind's range of movement.
- ▶ If someone is trapped, release the control panel immediately.

or

- ▶ Touch the control panel during automatic operation.
  The opening/closing process will be stopped.

! **NOTE** Malfunction due to snow and ice

Snow and ice may cause the sliding sunroof to malfunction.

- ▶ Open the sliding sunroof only if it is free of snow and ice.

! **NOTE** Damage caused by protruding objects

Objects that protrude from the sliding sunroof may damage the seals.

- ▶ Do not allow anything to protrude from the sliding sunroof.

! **NOTE** Damage to panorama roof with power tilt/sliding panel caused by roof luggage rack

If the panorama roof with power tilt/sliding panel is opened when a roof luggage rack is installed, the panorama roof with power tilt/sliding panel may be damaged by the roof luggage rack.

- ▶ Do not open the panorama roof with power tilt/sliding panel if a roof luggage rack is installed.

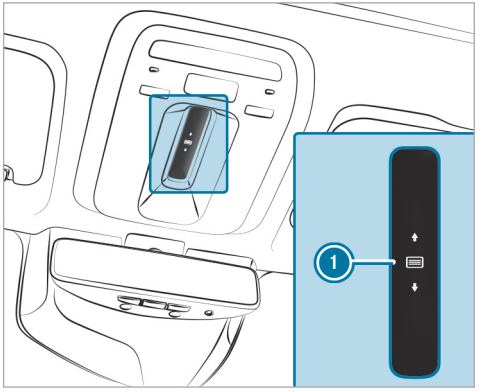

The sliding sunroof and the roller sunblind are operated using control panel 1.

The panorama roof with power tilt/sliding panel can be operated only when the roller sunblind is open.

- ▶ **To open:** swipe backwards across control panel 1 and hold it.

- **To close:** swipe forwards across control panel ① and hold it.
- **To raise or lower:** press control panel ① briefly.
- **To start automatic operation:** swipe forwards or backwards across control panel ①.
- **To cancel automatic operation:** press control panel ① again.
  The opening/closing process will be stopped.

Automatic reversing function of the sliding sunroof

If an obstacle obstructs the sliding sunroof during the closing process, the sliding sunroof will open again automatically. The automatic reversing function is only an aid and is not a substitute for your attentiveness.

- During the closing process, make sure that no body parts are in the closing area.

⚠ **WARNING** Risk of becoming trapped despite reversing function

The reversing function will not react:

- To soft, light and thin objects, e.g. fingers.
- Towards the end of the closing procedure.
- During resetting.

- During the closing process, make sure that no body parts are in the closing area.
- If someone is trapped, release the control panel immediately.

or

- Touch the control panel during automatic closing.
  The closing process will be stopped.

Automatic reversing function of the roller sunblind

If an obstacle obstructs the roller sunblind during the closing process, the roller sunblind will open again automatically. The automatic reversing function is only an aid and is not a substitute for your attentiveness.

- When closing the roller sunblind, make sure that no body parts are in the range of movement.

⚠ **WARNING** Risk of becoming trapped despite reversing function

In particular, the reversing function does not react to soft, light and thin objects, e.g. fingers.

- When closing the roller sunblind, make sure that no body parts are in the range of movement.
- If someone is trapped, release the control panel immediately.

or

- Touch the control panel during automatic closing.
  The closing process will be stopped.

Automatic functions of the sliding sunroof

ⓘ The term "sliding sunroof" refers to the panorama roof with power tilt/sliding panel.

Rain closing function when driving
Vehicles with a panorama roof with power tilt/sliding panel: if it starts to rain, the raised sliding sunroof will automatically be lowered while the vehicle is in motion.

Automatic lowering function
Vehicles with a panorama roof with power tilt/sliding panel: if the sliding sunroof is raised at the rear, it will automatically be lowered slightly at higher speeds. At low speeds, it will be raised again automatically.

WARNING Risk of becoming trapped by automatic lowering of the sliding sunroof

At higher speeds, the raised sliding sunroof will automatically be lowered slightly at the rear.

- Make sure that nobody reaches into the sliding sunroof's range of movement while the vehicle is in motion.
- If someone becomes trapped, touch the control panel.

Rectifying problems with the sliding sunroof

WARNING Risk of becoming trapped or fatal injuries when the sliding sunroof is closed again

If you close the sliding sunroof again immediately after it has been blocked or reset, the sliding sunroof will close with increased or maximum force.

There is a risk of becoming trapped or even of fatal injuries!

- Make sure that no parts of the body are in the closing area.
- If someone is trapped, release the control panel immediately.

or

- Touch the control panel during automatic closing.
  The closing process will be stopped.

The sliding sunroof cannot be closed and you cannot see the cause.

ⓘ The term "sliding sunroof" refers to the panorama roof with power tilt/sliding panel.

If the sliding sunroof is obstructed during closing and reopens again slightly:

- Immediately after automatic reversing, swipe forwards across the control panel (→ page 145) and hold it until the sliding sunroof is closed.
  The sliding sunroof will be closed with increased force.

If the sliding sunroof is obstructed again and opens again slightly:

- Repeat the previous step.
  The sliding sunroof will be closed again with increased force.

The sliding sunroof or the roller sunblind is not operating smoothly.

- Reset the sliding sunroof and the roller sunblind.

Resetting the sliding sunroof and the roller sunblind

- ▶ Swipe forwards across the control panel (→ page 145) and hold it repeatedly until the sliding sunroof is completely closed.
- ▶ Swipe across the control panel and hold it for another second.
- ▶ Swipe across and hold the control panel until the roller sunblind is fully closed.
- ▶ Swipe across the control panel and hold it for another second.
- ▶ Use automatic operation to fully open and then close the sliding sunroof.

Anti-theft protection

Function of the immobilizer

The immobilizer prevents your vehicle from being started without the correct key.

The immobilizer is automatically activated when the vehicle is switched off, and deactivated when the vehicle is switched on.

When leaving the vehicle, always take the key with you and lock the vehicle. Anyone can start the vehicle if a valid key has been left inside the vehicle.

ⓘ In the event that the engine cannot be started (yet the vehicle's starter battery is charged), the immobilizer may be defective. Contact an authorized Mercedes-Benz Center or call 1-800-FOR-MERCedes (in the USA) or 1-800-387-0100 (in Canada).

ATA (anti-theft alarm system)

Function of the ATA system

If the ATA system is armed, a visual and audible alarm is triggered in the following situations:

- When a door is opened
- When the tailgate is opened
- When the hood is opened
- When interior protection is triggered (→ page 150)
- When the tow-away alarm is triggered (→ page 150)

The ATA system is armed automatically after approximately ten seconds in the following situations:

- After the vehicle is locked with the key
- After the vehicle is locked using KEYLESS-GO

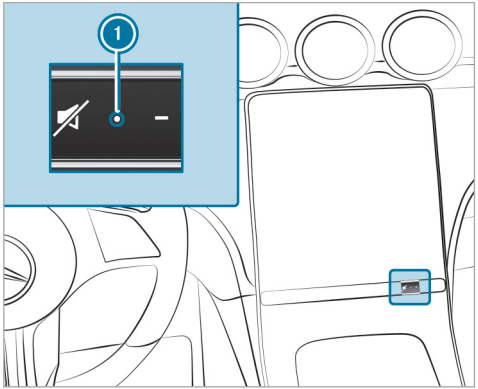

Indicator lamp ① flashes when the ATA system is armed.

The ATA system is deactivated automatically in the following situations:

- After the vehicle is unlocked with the key
- After the vehicle is unlocked using KEYLESS-GO
- After the start/stop button is pressed with the key in the storage compartment (→ page 232)

Deactivating the ATA

▶ Press the [ ], [ ] or [ ] button on the key.

or

▶ Press the start/stop button with the key in the storage compartment (→ page 232)

Deactivating the alarm using KEYLESS-GO:

▶ Grasp the outside door handle with the key outside the vehicle.

Function of the tow-away alarm

ⓘ This function may not be available in all countries.

An audible and visual alarm is triggered if a change in your vehicle's angle of inclination is detected while the tow-away alarm is armed.

The tow-away alarm is automatically armed after about 60 seconds:

- After the vehicle is locked with the key
- After the vehicle is locked using KEYLESS-GO

The tow-away alarm is only armed when the following components are closed:

- Doors
- Tailgate

The tow-away alarm is automatically deactivated:

- After the [ ] or [ ] button on the key is pressed
- After the start/stop button is pressed with the key in the storage compartment (→ page 232)
- After the vehicle is unlocked using KEYLESS-GO
- When HANDS-FREE ACCESS is used

Information on collision detection for a parked vehicle (→ page 301).

Arming/deactivating tow-away alarm

Multimedia system:

→ [ ] ▸▸ Settings ▸▸ Vehicle ▸▸ Opening/closing ▸▸ Vehicle Protection

▶ Arm or deactivate Tow-away Protection.

Tow-away alarm is armed again in the following cases:

- The vehicle is unlocked again.
- A door is opened.
- The vehicle is locked again.

Function of interior protection

ⓘ This function may not be available in all countries.

When interior protection is armed, a visual and audible alarm is triggered if movement is detected in the vehicle interior.

Interior protection is armed automatically after approximately ten seconds:

- After the vehicle is locked with the key
- After the vehicle is locked using KEYLESS-GO

Interior protection is only armed when the following components are closed:

- Doors
- Tailgate

Interior protection is automatically deactivated:

- After the [ ] or [ ] button on the key is pressed
- After the start/stop button is pressed with the key in the storage compartment (→ page 232)
- After the vehicle is unlocked using KEYLESS-GO
- When HANDS-FREE ACCESS is used

The following situations can lead to a false alarm:

- When there are moving objects suchas mascots in the vehicle interior
- If a side window is open
- If the panoramic sliding sunroof is open

Arming/deactivating interior protection

Multimedia system:

→ [ ] ▸▸ Settings ▸▸ Vehicle ▸▸ Opening/closing ▸▸ Vehicle Protection

▶ Arm or deactivate Interior Protection.

Interior protection will be armed again in the following cases:

- The vehicle is unlocked again.
- A door is opened.
- The vehicle is locked again.

Notes on the correct driver's seat position

⚠ **WARNING** Risk of accident due to adjusting the vehicle settings while the vehicle is in motion

You could lose control of the vehicle in the following situations in particular:

- If you adjust the driver's seat, the head restraint, the steering wheel or the mirror while the vehicle is in motion
- If you fasten your seat belt while the vehicle is in motion

▶ Before starting the vehicle: in particular, adjust the driver's seat, head restraint, steering wheel and mirror, and fasten your seat belt.

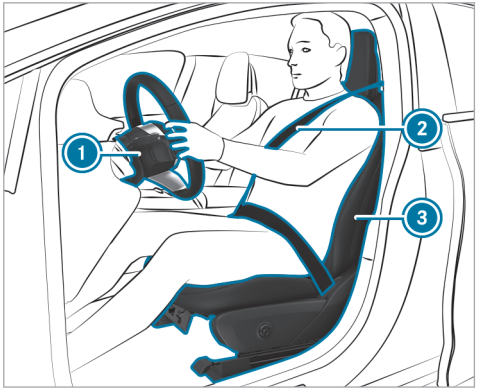

Ensure the following when adjusting steering wheel ①, seat belt ② and driver's seat ③:

- You are sitting as far away from the driver's air bag as possible, taking the following points into consideration:
- You are sitting in an upright position
- Your thighs are slightly supported by the seat cushion
- Your legs are not fully extended and you can depress the pedals properly
- The back of your head is supported at eye level by the center of the head restraint
- You can hold the steering wheel with your arms slightly bent
- You can move your legs freely
- You can see all the displays on the driver display clearly
- You have a good overview of the traffic conditions
- Observe the notes on correctly fastening the seat belt (→ page 95).

Notes on grab handles

⚠ **WARNING** Risk of injury due to excessive load on the grab handles

If you apply your full body weight to the grab handle or pull it abruptly, the grab handle may be damaged or come loose from its anchorage. This may result in injuries.

▶ Use the grab handles only to stabilize the seating position or to assist in getting in and out of the seat.

Seats

Adjusting the front seat with manual and electric seat adjustment

⚠ **WARNING** Risk of becoming trapped if the seats are adjusted by children

Children could become trapped if they adjust the seats, particularly when unattended.

▶ When leaving the vehicle, always take the SmartKey with you and lock the vehicle.

▶ Never leave children unattended in the vehicle.

You can adjust the seats when the vehicle is switched off.

⚠ **WARNING** Risk of becoming trapped when adjusting the seat

When you adjust a seat, you or other vehicle occupants could become trapped, e.g. on the seat guide rail.

▶ When adjusting a seat, make sure that no one has any part of their body within the sweep of the seat.

Observe the safety notes on "Air bags" and "Children in the vehicle".

⚠ **WARNING** Risk of accident due to the driver's seat not being engaged

The driver's seat may move unexpectedly while driving.

This could cause you to lose control of the vehicle.

▶ Always make sure that the driver's seat is engaged before starting the vehicle.

⚠ **WARNING** Risk of accident due to adjusting the vehicle settings while the vehicle is in motion

You could lose control of the vehicle in the following situations in particular:

- If you adjust the driver's seat, the head restraint, the steering wheel or the mirror while the vehicle is in motion
- If you fasten your seat belt while the vehicle is in motion

▶ Before starting the vehicle: in particular, adjust the driver's seat, head restraint, steering wheel and mirror, and fasten your seat belt.

⚠ **WARNING** Risk of becoming trapped if the seat height is adjusted carelessly

If you adjust the seat height carelessly, you or other vehicle occupants could be trapped and thereby injured.

Children in particular could accidentally press the electrical seat adjustment buttons and become trapped.

- While moving the seats, make sure that hands or other body parts do not get under the lever assembly of the seat adjustment system.

WARNING Risk of injury due to head restraints not being installed or being adjusted incorrectly

If head restraints have not been installed or have not been adjusted correctly, there is an increased risk of injury in the head and neck area, e.g. in the event of an accident or when braking.

- Always drive with the head restraints installed.
- Before driving off, make sure for every vehicle occupant that the center of the head restraint supports the back of the head at about eye level.

Adjust the head restraint fore-and-aft position so that it is as close as possible to the back of your head.

WARNING Risk of injury or death due to an incorrect seat position

The seat belt does not offer the intended level of protection if you have not moved the seat backrest to an almost vertical position.

In particular, you could slip beneath the seat-belt and become injured.

- Adjust the seat properly before beginning your journey.
- Always ensure that the seat backrest is in an almost vertical position and that the shoulder belt is routed across the center of your shoulder.

WARNING Risk of potentially fatal injuries due to objects trapped under the front passenger seat

Objects trapped under the front passenger seat may interfere with the function of the automatic front passenger air bag shutoff or damage the system.

- Do not stow any objects under the front passenger seat.
- When the front passenger seat is occupied, ensure that no objects have become trapped beneath the front passenger seat.

NOTE Damage to the seats when adjusting

The seats may be damaged by objects when adjusting the seats.

- When adjusting the seats, make sure that there are no objects in the footwell, under or behind the seats.

NOTE Damage to the headliner when making adjustments

The headliner may be damaged when adjusting the front seats.

▶ Adjust the head restraints first before adjusting the height of the respective seat.

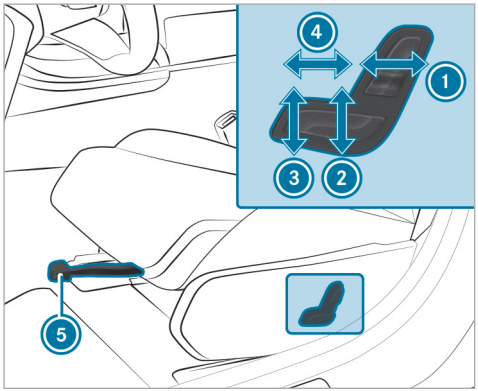

① Seat backrest inclination
② Seat height
③ Seat cushion inclination
④ Seat cushion length
⑤ Seat fore-and-aft position

▶ **To adjust the seat fore-and-aft position:** lift lever ⑤ and slide the seat into the desired position.

▶ Make sure that the seat is engaged.

Adjusting the front seat fully electrically

⚠ **WARNING** Risk of becoming trapped if the seats are adjusted by children

Children could become trapped if they adjust the seats, particularly when unattended.

▶ When leaving the vehicle, always take the SmartKey with you and lock the vehicle.

▶ Never leave children unattended in the vehicle.

You can adjust the seats when the vehicle is switched off.

⚠ **WARNING** Risk of becoming trapped when adjusting the seat

When you adjust a seat, you or other vehicle occupants could become trapped, e.g. on the seat guide rail.

▶ When adjusting a seat, make sure that no one has any part of their body within the sweep of the seat.

Observe the safety notes on "Air bags" and "Children in the vehicle".

⚠ **WARNING** Risk of accident due to adjusting the vehicle settings while the vehicle is in motion

You could lose control of the vehicle in the following situations in particular:

- If you adjust the driver's seat, the head restraint, the steering wheel or the mirror while the vehicle is in motion
- If you fasten your seat belt while the vehicle is in motion

- Before starting the vehicle: in particular, adjust the driver's seat, head restraint, steering wheel and mirror, and fasten your seat belt.

WARNING Risk of becoming trapped if the seat height is adjusted carelessly

If you adjust the seat height carelessly, you or other vehicle occupants could be trapped and thereby injured.

Children in particular could accidentally press the electrical seat adjustment buttons and become trapped.

- While moving the seats, make sure that hands or other body parts do not get under the lever assembly of the seat adjustment system.

WARNING Risk of injury due to head restraints not being installed or being adjusted incorrectly

If head restraints have not been installed or have not been adjusted correctly, there is an increased risk of injury in the head and neck area, e.g. in the event of an accident or when braking.

- Always drive with the head restraints installed.
- Before driving off, make sure for every vehicle occupant that the center of the head restraint supports the back of the head at about eye level.

Adjust the head restraint fore-and-aft position so that it is as close as possible to the back of your head.

WARNING Risk of injury or death due to an incorrect seat position

The seat belt does not offer the intended level of protection if you have not moved the seat backrest to an almost vertical position.

In particular, you could slip beneath the seat-belt and become injured.

- Adjust the seat properly before beginning your journey.
- Always ensure that the seat backrest is in an almost vertical position and that the shoulder belt is routed across the center of your shoulder.

WARNING Risk of potentially fatal injuries due to objects trapped under the front passenger seat

Objects trapped under the front passenger seat may interfere with the function of the automatic front passenger air bag shutoff or damage the system.

- Do not stow any objects under the front passenger seat.
- When the front passenger seat is occupied, ensure that no objects have become trapped beneath the front passenger seat.

NOTE Damage to the seats when adjusting

The seats may be damaged by objects when adjusting the seats.

▶ When adjusting the seats, make sure that there are no objects in the footwell, under or behind the seats.

The switches for adjusting the seats do not move. You will therefore receive no direct feedback on the switch while pressing it. Feedback is provided only by the movement of the seat.

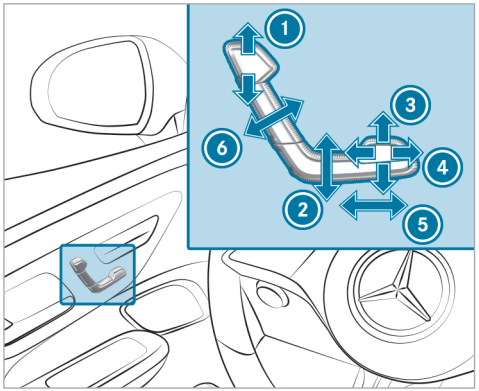

1. Head restraint height
2. Seat height
3. Seat cushion inclination
4. Seat cushion length
5. Seat fore-and-aft position
6. Seat backrest inclination

▶ Save the settings with the memory function (→ page 169).

ⓘ The head restraint height will be adjusted automatically when you adjust the seat height or the seat fore-and-aft position.

Adjusting the 4-way lumbar support

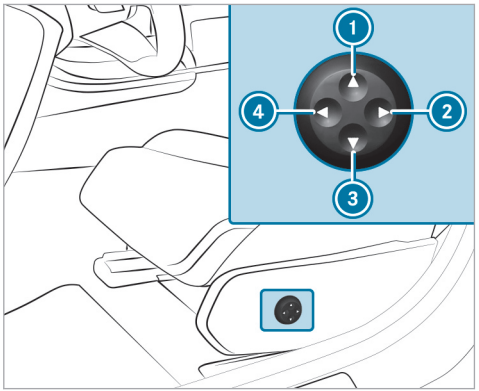

1. Higher
2. Softer

③ Lower
④ Firmer

▶ Use buttons ① to ④ to adjust the contour of the backrest.

Head restraints

Adjusting the head restraints on the front seats

⚠ **WARNING** Risk of accident due to adjusting the vehicle settings while the vehicle is in motion

You could lose control of the vehicle in the following situations in particular:

- If you adjust the driver's seat, the head restraint, the steering wheel or the mirror while the vehicle is in motion
- If you fasten your seat belt while the vehicle is in motion

▶ Before starting the vehicle: in particular, adjust the driver's seat, head restraint, steering wheel and mirror, and fasten your seat belt.

⚠ **WARNING** Risk of injury due to incorrectly adjusted head restraints

If head restraints have not been adjusted correctly, there is an increased risk of injury in the head and neck area, e.g. in the event of an accident or sudden braking.

▶ Before driving off, make sure for every vehicle occupant that the center of the head restraint supports the back of the head at about eye level.

Adjust the head restraint fore-and-aft position so that it is as close as possible to the back of your head.

Seats with manual and electric seat adjustment

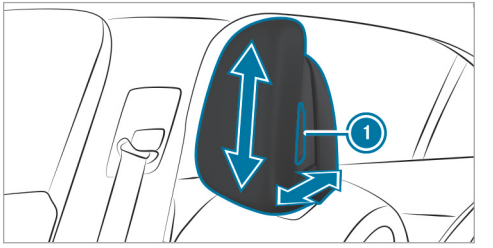

▶ Take hold of the head restraint on both sides and press release knob ①.

▶ **To move forwards or backwards:** pull the head restraint forwards or push it backwards.

▶ **To move upwards or downwards:** push the head restraint upwards or downwards.

▶ Let go of release knob ①.

Seats with electric seat adjustment

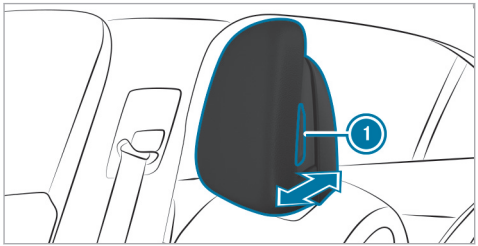

- Take hold of the head restraint on both sides and press release knob (1).
- **To move forwards or backwards:** pull the head restraint forwards or push it backwards.
- Let go of release knob (1).
- **To move upwards or downwards:** adjust the head restraint using the buttons on the door operating unit (→ page 155).

Adjusting the head restraints of the rear seats manually

⚠ **WARNING** Risk of injury due to head restraints not being installed or being adjusted incorrectly

If head restraints have not been installed or have not been adjusted correctly, there is an increased risk of injury in the head and neck area, e.g. in the event of an accident or when braking.

- Always drive with the head restraints installed.
- Before driving off, make sure for every vehicle occupant that the center of the head restraint supports the back of the head at about eye level.

Adjust the head restraint fore-and-aft position so that it is as close as possible to the back of your head.

ⓘ Move all head restraints up at least to the first detent, even in the steeper seating position (cargo position) (→ page 179). If a head restraint is in the lowest, non-locked position, the respective seat must not be used.

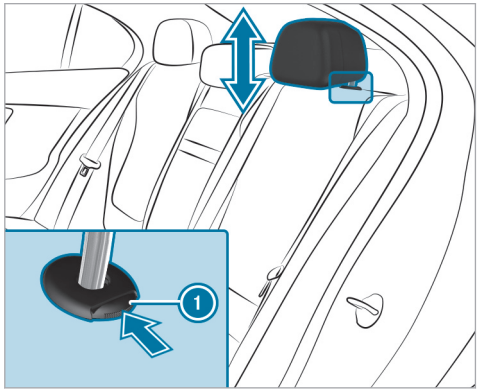

- **To raise:** push release knob (1) in the direction of the arrow and pull the head restraint up until it engages.
- **To lower:** press release knob (1) in the direction of the arrow and push the head restraint down until it engages.

Installing/removing the rear seat head restraints

WARNING Risk of injury due to head restraints not being installed or being adjusted incorrectly

If head restraints have not been installed or have not been adjusted correctly, there is an increased risk of injury in the head and neck area, e.g. in the event of an accident or when braking.

- Always drive with the head restraints installed.
- Before driving off, make sure for every vehicle occupant that the center of the head restraint supports the back of the head at about eye level.

Adjust the head restraint fore-and-aft position so that it is as close as possible to the back of your head.

Removing

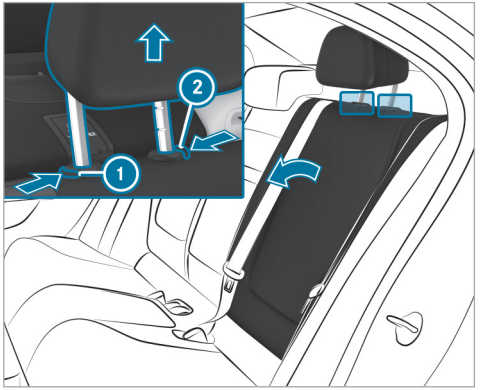

- Release the rear seat backrest and fold it forwards slightly (→ page 36).
- Press release knob ② and pull the head restraint upwards as far as it will go. Release knob ① will extend.
- Push both release knobs ① and ② at the same time in the direction of the arrow and pull out the head restraint.
- Fold the rear seat backrest back until it engages.

Installing

- Release the rear seat backrest and fold it forwards slightly (→ page 36).
- Insert the head restraint such that the notches on the bar are on the left when viewed in the direction of travel.
- Push the head restraint down until it engages.
- Fold the rear seat backrest back until it engages.

Configuring the seat settings

Multimedia system:

→ ⌂ ▸▸ Comfort ▸▸ Seat

Adjusting the air cushions

- In the corresponding menu, adjust the air cushions for Lumbar or Side Bolsters.

Setting the seat heating balance

- Select Heating Settings.
- Select Seat Heating Balance.
- Adjust the heat distribution for the desired seat.

Setting automatic seat adjustment

WARNING Risk of becoming trapped during adjustment of the driver's seat after calling up a driver profile

Selecting a user profile may trigger an adjustment of the driver's seat to the position saved under the user profile. You or other vehicle occupants could be injured in the process.

- Make sure that when the position of driver's seat is being adjusted using the multimedia system, no people or body parts are in the seat's range of movement.

If there is a risk of someone becoming trapped, immediately stop the adjustment process by:

- a) Pressing the warning message on the central display.

or

- b) Pressing a position button of the memory function or a seat adjustment switch in the driver's door.
  The adjustment process is stopped.

Multimedia system:
→ ⌂ ▸▸ Comfort ▸▸ Seat ▸▸ Automatic Seat Positioning

Manually adjusting driver's seat and steering wheel position to body size

The vehicle calculates a suitable driver's seat and steering wheel position on the basis of the driver's body size and sets this directly.

- **To set the unit of measurement:** select cm or ft/in.
- Set the size using the scale.
- Select Start Positioning.
  The driver's seat and steering wheel position is adjusted to the body size that has been set.

ⓘ You can also configure these settings via the Mercedes me user account for your user profile. By synchronizing the profiles in the vehicle and the Mercedes me connect profiles, you can carry over these settings for your vehicle. Further information about synchronizing user profiles (→ page 434).

ⓘ If the driver's seat and steering wheel position calculated by the vehicle is not practical or comfortable, it can be manually adapted at any time via the control buttons.
The outside mirrors are not set via this function. Instead, they have to be set manually via the operating switches.

Overview of massage programs

- Classic Massage: Relaxing back massage
- Mobilizing Massage Mobilizing massage with upward-moving relaxing waves. Can promote slower, deeper respiration. This can improve the supply of oxygen to cells and the brain.
- Activating Massage: Activating massage with upward-moving relaxing waves

- Relaxing Massage: Relaxing back massage with increasing wave motions and then soothing movements
- Deep Waves: Wave-like movements in the cushion can promote blood flow and metabolic processes in the lower back and legs
- Deep Workout: Wave-like movements in the cushion are combined with wave movements from the backrest and can stimulate blood circulation and metabolism in the lower back, buttocks and legs

ⓘ The Deep Waves and Deep Workout programs are only available on the driver's seat.

Selecting the massage program for the front seats

Multimedia system:

⟶ [⌂] ▸▸ Comfort

▶ Select Massage.

▶ Select a massage program (→ page 161).

▶ Start the program for the desired seat [▶].

▶ **To set the massage intensity:** switch Intensive on or off .

▶ **To stop the massage:** select [■].

ⓘ The availability of this function is dependent on the vehicle's equipment.

Resetting seat settings

Multimedia system:

⟶ [⌂] ▸▸ Comfort ▸▸ Seat

▶ Select Reset.

▶ Select [↻] for the desired seat.
The settings for the selected seat are reset.

Switching the seat heating on/off

⚠ **WARNING** Risk of burns due to repeatedly switching on the seat heating

Repeatedly switching on the seat heating can cause the seat cushion and seat backrest padding to become very hot.

In particular, the health of persons with limited temperature sensitivity or a limited ability to react to high temperatures may be affected or they may even suffer burn-like injuries.

▶ Do not repeatedly switch on the seat heating.

To protect against overheating, the seat heating may be temporarily deactivated after it has been switched on repeatedly.

! **NOTE** Damage to the seats caused by objects or documents when the seat heating is switched on

When the seat heating is switched on, overheating may occur due to objects or documents placed on the seats, e.g. seat cushions or child seats. This could cause damage to the seat surface.

▶ Make sure that no objects or documents are on the seats when the seat heating is switched on.

Requirements

- The power supply is switched on.

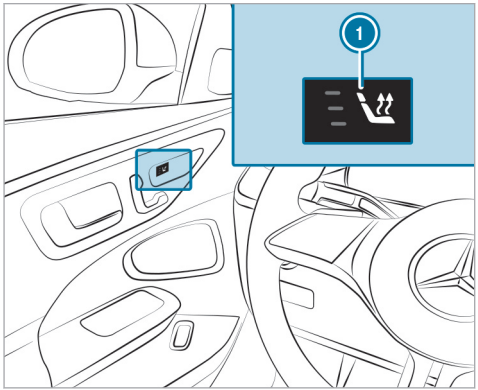

▶ Press button ① for the respective seat repeatedly until the desired heating level is reached.
Depending on the heating level, up to three indicator lamps will light up. If all indicator lamps are off, the seat heating is switched off.

ⓘ The seat heating will automatically switch down from the three heating levels after around 8, 10 and 20 minutes until the seat heating is switched off.

ⓘ If you switch the power supply off and on again within 20 minutes, the previous setting of the seat heating for the driver's seat will remain active.

Switching the seat ventilation on/off

Requirements

- The power supply is switched on.

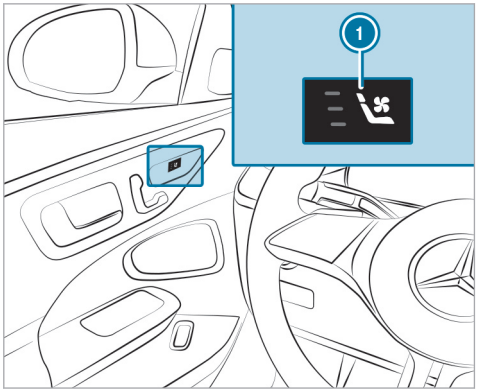

▶ Press button ① for the respective seat repeatedly until the desired blower setting is reached.
Depending on the blower setting, up to three indicator lamps will light up. If all indicator lamps are off, the seat ventilation is switched off.

ⓘ If you switch the power supply off and on again within 20 minutes, the previous seat ventilation setting for the driver's seat will remain active.

Steering wheel

Adjusting the steering wheel manually

⚠ **WARNING** Risk of accident due to adjusting the vehicle settings while the vehicle is in motion

You could lose control of the vehicle in the following situations in particular:

- If you adjust the driver's seat, the head restraint, the steering wheel or the mirror while the vehicle is in motion
- If you fasten your seat belt while the vehicle is in motion

▶ Before starting the vehicle: in particular, adjust the driver's seat, head restraint, steering wheel and mirror, and fasten your seat belt.

⚠ **WARNING** Risk of entrapment for children when adjusting the steering wheel

Children could injure themselves if they adjust the steering wheel.

▶ Never leave children unattended in the vehicle.

▶ When leaving the vehicle, always take the key with you and lock the vehicle.

Unlocking

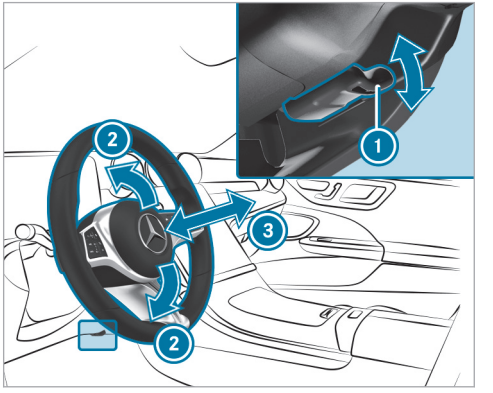

▶ Fold release lever ① down as far as it will go.

▶ Adjust height ② and distance ③ to the steering wheel.

Locking

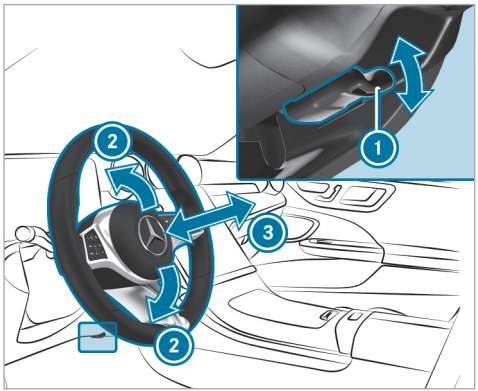

- Fold release lever (1) up as far as it will go.
- Check and make sure that the steering column is locked by moving the steering wheel.

Adjusting the steering wheel electrically

WARNING Risk of accident due to adjusting the vehicle settings while the vehicle is in motion

You could lose control of the vehicle in the following situations in particular:

- If you adjust the driver's seat, the head restraint, the steering wheel or the mirror while the vehicle is in motion
- If you fasten your seat belt while the vehicle is in motion

- Before starting the vehicle: in particular, adjust the driver's seat, head restraint, steering wheel and mirror, and fasten your seat belt.

WARNING Risk of entrapment for children when adjusting the steering wheel

Children could injure themselves if they adjust the steering wheel.

- Never leave children unattended in the vehicle.
- When leaving the vehicle, always take the key with you and lock the vehicle.

The steering wheel can be adjusted when the power supply is disconnected.

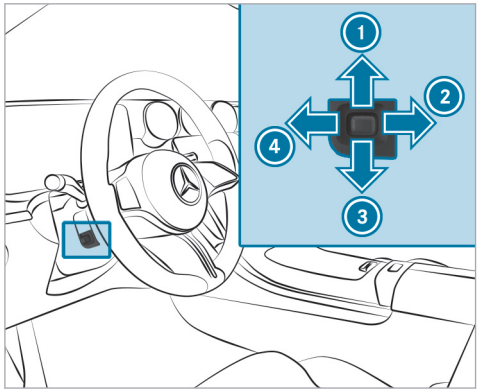

1. To move up
2. To move back
3. To move down
4. To move forward

▶ Save the settings with the memory function (→ page 169).

Decoupling the steering wheel heater from the seat heating

Requirements

- The power supply or the vehicle has been switched on.
- The steering wheel heater and the seat heating are linked.

Multimedia system:

→ ⌂ ▸▸ Comfort ▸▸ Seat ▸▸ Heating Settings

The function is active by default and the steering wheel heater is automatically activated and deactivated when the seat heating is switched on and off.

▶ Tap on Additional Steering Wheel Heating. The steering wheel heater will be decoupled from the seat heating.

When you switch the vehicle off, the steering wheel heater will switch off.

ⓘ The steering wheel heater can also be deactivated via the MBUX voice assistant.

Easy entry and exit feature

Using the easy entry and exit feature

⚠ **WARNING** Risk of accident when pulling away during the adjustment process of the easy entry and exit feature

You could lose control of the vehicle.

▶ Always wait until the adjustment process is complete before driving off.

⚠ **WARNING** Risk of becoming trapped when adjusting the easy entry and exit feature

You and other vehicle occupants, particularly children, may become trapped.

▶ Make sure that no one has any part of their body within the range of movement of the steering wheel and driver's seat.

If there is a risk of becoming trapped by the steering wheel:

▶ Move the steering wheel adjustment lever.
The adjustment process is stopped.

If there is a risk of becoming trapped by the driver's seat:

▶ Press the switch for seat adjustment.
The adjustment process is stopped.

▶ Never leave children unattended in the vehicle.

▶ When leaving the vehicle, always take the key with you and lock the vehicle.

Vehicles with memory function: you can stop the adjustment process by pressing one of the memory function position switches.

⚠ **WARNING** Risk of becoming trapped if children activate the easy entry and exit feature

Children could become trapped if they activate the easy entry and exit feature, particularly when unattended.

▶ Never leave children unattended in the vehicle.

▶ When leaving the vehicle, always take the key with you and lock the vehicle.

In order to use the easy entry and exit feature, the automatic seat adjustment function must have been switched on (→ page 161).

When the easy entry and exit feature is active, the steering wheel and driver's seat will move as follows:

- The steering wheel will move upwards.
- The driver's seat will move forward or backward to a position suitable for getting in or out of the vehicle.

This will occur in the following situations:

- You switch off the vehicle when the driver's door is open.
- You open the driver's door when the vehicle is switched off.

ⓘ The steering wheel will then move upwards only if it is not already as high as it will go.

The driver's seat will move forwards or backwards only if it is not already in the ideal position for getting in or out of the vehicle.

The steering wheel and the driver's seat will move back to the last driving position in the following cases:

- You switch the power supply or the vehicle on when the driver's door is closed.
- You close the driver's door when the vehicle is switched on.

The last drive position will be saved when:

- If you switch off the vehicle.
- **Vehicles with memory function:** you call up the seat settings via the memory function.
- **Vehicles with memory function:** you save the seat settings via the memory function.

Vehicles with memory function: press one of the memory function position switches to stop the adjustment process.

Setting the easy entry and exit feature

Requirements

- The automatic seat adjustment has been activated (→ page 161).
- The power supply or the vehicle has been switched on.

Multimedia system:

Settings ▸▸ Vehicle ▸▸ Comfort ▸▸ Easy Entry And Exit Feature

Setting the easy entry and exit feature

▶ Select Steering Wheel & Seat, Steering Wheel Only or Off.

ⓘ If you are using a custom user profile, this information will be used for the easy entry and exit feature. This will cause the driver's seat and steering wheel to move into the correct position automatically (→ page 431).

Memory function

Function of the memory function

⚠ **WARNING** Risk of an accident if the memory function is used while driving

If you use the memory function on the driver's side while driving, you could lose control of the vehicle as a result of the adjustments being made.

▶ Only use the memory function on the driver's side when the vehicle is stationary.

⚠ **WARNING** Risk of entrapment when adjusting the seat with the memory function

When the memory function adjusts the seat, you and other vehicle occupants – particularly children – could become trapped.

▶ During the adjusting process of the memory function, ensure that no body parts are in the area of movement of the seat or the steering wheel.

▶ If someone becomes trapped, press a preset position button or seat adjustment switch immediately.
The adjustment process is stopped.

⚠ **WARNING** Danger of entrapment when memory function is activated by children

When children activate the memory function, they can get trapped, especially if they are unsupervised.

▶ Never leave children unattended in the vehicle.

▶ When leaving the vehicle, always take the key with you and lock the vehicle.

You can use the memory function when the vehicle is switched off.
Seat adjustments for up to three people can be stored and called up using the memory function.

You can save the following settings for the front seat:

- Seat, backrest, head restraint position and contour of the seat backrest in the lumbar region
- Seat heating: distribution of the heated sections of the seat cushion and seat backrest
- Driver's side: steering wheel position and position of the outside mirrors on the driver's and front passenger sides

Operating the memory function

WARNING Risk of an accident if the memory function is used while driving

If you use the memory function on the driver's side while driving, you could lose control of the vehicle as a result of the adjustments being made.

▶ Only use the memory function on the driver's side when the vehicle is stationary.

WARNING Risk of entrapment when adjusting the seat with the memory function

When the memory function adjusts the seat, you and other vehicle occupants – particularly children – could become trapped.

▶ During the adjusting process of the memory function, ensure that no body parts are in the area of movement of the seat or the steering wheel.

▶ If someone becomes trapped, press a preset position button or seat adjustment switch immediately.
The adjustment process is stopped.

WARNING Danger of entrapment when memory function is activated by children

When children activate the memory function, they can get trapped, especially if they are unsupervised.

▶ Never leave children unattended in the vehicle.

▶ When leaving the vehicle, always take the key with you and lock the vehicle.

You can use the memory function when the vehicle is switched off.

Storing

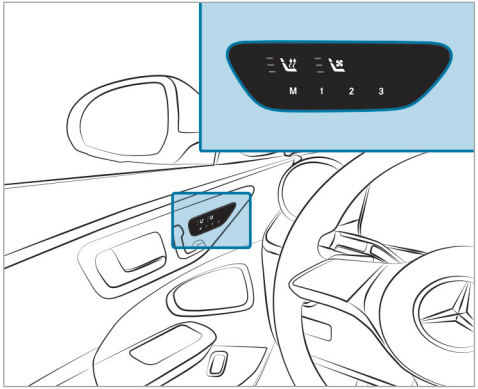

- Set the front seat, the steering wheel, the head-up display and the outside mirror to the desired position.
- Press the M button and then release it.
- Press one of the preset position buttons 1, 2 or 3 within three seconds.
  An acoustic signal sounds. The settings are stored.

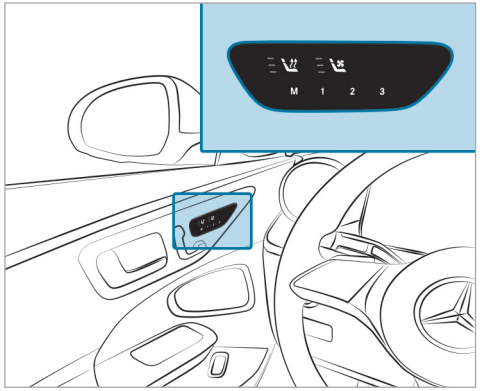

- **To call up:** press the preset position button 1, 2 or 3.
  The seat will be moved to the stored position. After releasing the button, the front seat, outside mirror, head-up display and steering column will continue to move into the stored position automatically.

You can watch an animation on this topic via the following link:

Stowage areas

Notes on loading the vehicle

DANGER Risk of exhaust gas poisoning

Combustion engines emit poisonous exhaust gases such as carbon monoxide. Exhaust gases can enter the vehicle interior if the tailgate is open when the engine is running, especially if the vehicle is in motion.

- Always switch off the engine before opening the tailgate.
- Never drive with the tailgate open.

Objects in the deployment area of an air bag may prevent the air bag from functioning correctly. Observe the notes on air bags (→ page 110).

WARNING Risk of injury from unsecured items in the vehicle

If objects, luggage or loads are not secured or not secured sufficiently, they could slip, tip over or be thrown around and thereby hit vehicle occupants.

There is a risk of injury, particularly in the event of sudden braking or a sudden change in direction.

- Always stow objects in such a way that they cannot be thrown around.
- Before the journey, secure objects, luggage or loads against slipping or tipping over.

WARNING Risk of injury due to objects being stowed incorrectly

If objects in the vehicle interior are stowed incorrectly, they can slide or be thrown around

and hit vehicle occupants. In addition, cup holders, open storage spaces and mobile phone receptacles cannot always retain all objects within.

There is a risk of injury, particularly in the event of sudden braking or abrupt changes in direction.

- Always store objects such that they cannot be thrown around in such situations.
- Always make sure that objects do not protrude from storage spaces, parcel nets or storage nets.
- Close the lockable storage spaces before starting a journey.
- Stow and secure objects that are heavy, hard, pointed, sharp-edged, fragile or too large in the cargo compartment.

WARNING Risk of accident due to objects in the driver's and front-passenger footwell

Objects in the driver's and front-passenger footwell may impede pedal travel or block a depressed pedal.

This jeopardizes the operating- and road safety of the vehicle.

- Stow all objects in the vehicle securely so that they cannot get into the driver's or front-passenger footwell.
- Always ensure that the pedals have sufficient free space.
- Always install the floor mats securely and as prescribed.
- Do not use loose floor mats and do not place floor mats on top of one another.

Vehicles with automatic front passenger air bag shutoff: objects trapped under the front passenger seat may interfere with the function of the automatic front passenger air bag deactivation or damage the system. Therefore please observe the notes on the function of automatic front passenger air bag deactivation (→ page 100).

WARNING - Risk of accident or injury when using the cup holder while the vehicle is moving

The cup holder cannot secure containers while the vehicle is moving.

If you use a cup holder while the vehicle is moving, the container may be flung around and liquids may be spilled. The vehicle occupants may come into contact with the liquid and if it is hot, they could be scalded. You could be distracted from traffic conditions and you may lose control of the vehicle.

- Only use the cup holder when the vehicle is stationary.
- Only use the cup holder for containers of the right size.
- Close the container, particularly if the liquid is hot.

NOTE Damage to the cup holder

The cup holder can be damaged when folding back the rear armrest. When open, the cup holder can be damaged by body weight.

- The rear armrest can only be folded back when the cup holder is closed.
- Do not sit or support yourself on the cup holder when it is open.

WARNING Risk of burns from the tailpipe and tailpipe trims

The exhaust tailpipe and tailpipe trims can become very hot. If you come into contact with these parts of the vehicle, you could burn yourself.

- Always be particularly careful around the tailpipe and the tailpipe trims and supervise children especially closely in this area.
- Allow vehicle parts to cool down before touching them.

NOTE Damage to the cargo floor caused by an unevenly distributed load or an abrupt application of load.

The cargo floor may be damaged by an unevenly distributed load or an abrupt application of load.

- Distribute the load evenly.
- Drive carefully when the vehicle is laden. Avoid abrupt starts, braking and steering as well as rapid cornering.

ⓘ Leather is a natural product. It has natural surface properties, such as differences in structure, marks caused by growth and injury or subtle color differences. These surface characteristics are particular to leather, and not material defects. Leather is also subject to a natural aging process which changes the surface characteristics.

The driving characteristics of your vehicle are dependent on the distribution of the load within the vehicle. You should bear the following in mind when loading the vehicle:

- Never allow the payload including occupants to exceed the maximum permissible gross mass or the gross axle weight rating for the vehicle. The values are specified on the vehicle identification plate on the vehicle's B-pillar.
- The load must not protrude above the upper edge of the seat backrests.
- Always place the load behind unoccupied seats if possible.
- Secure the load using the cargo tie-down rings and distribute the tension evenly.

Notes on carrying a roof load:

- Distribute the roof load and vehicle load evenly, and place heavy objects at the bottom. Also observe the notes on loading the vehicle.
- Drive with care. Avoid sudden starting, braking and steering maneuvers or fast cornering.

- When carrying a roof load or when the vehicle is fully loaded or occupied, select drive program [E] or [C]. These are configured for good stability (→ page 254).

ⓘ Further information on stowage compartments and stowage facilities can be found in the Digital Operator's Manual.

Stowage spaces in the vehicle interior

Overview of the front storage compartments

⚠ **WARNING** Risk of injury due to objects being stowed incorrectly

If objects in the vehicle interior are stowed incorrectly, they can slide or be thrown around and hit vehicle occupants. In addition, cup holders, open storage spaces and mobile phone brackets cannot always retain all objects they contain.

There is a risk of injury, particularly in the event of sudden braking or a sudden change in direction.

- ▶ Always stow objects in such a way that they cannot be thrown around in such situations.
- ▶ Always make sure that objects do not protrude from storage spaces, parcel nets or storage nets.
- ▶ Close the lockable storage spaces before starting a journey.
- ▶ Always stow and secure heavy, hard, pointed, sharp-edged, fragile or bulky objects in the trunk.

Observe the notes on loading the vehicle.

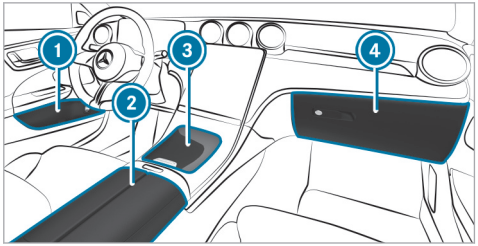

1. Stowage spaces in the doors
2. Storage compartment under the armrest with multimedia and USB ports
3. Storage compartment in the front center console with cup holders, USB ports and charging module for wireless charging of mobile phones
4. Glove box

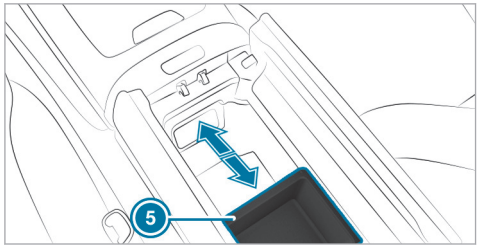

Under armrest ② there is also a sliding storage compartment ⑤, which can be used in the front or rear position. Push the compartment to the desired position until it engages.

For cleaning, the storage compartment can be moved to the middle position and removed. The rubber mat in the storage compartment can be removed for cleaning.

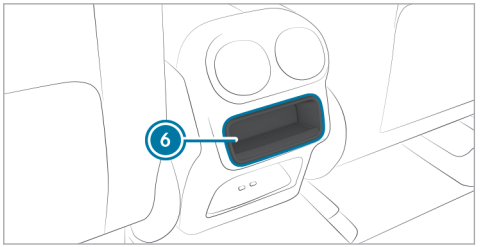

Depending on the vehicle version, there is a storage compartment in the rear center console ⑥. The rubber mat in the storage compartment can be removed for cleaning.

Opening and closing the storage compartment in the front center console

WARNING Risk of injury due to objects being stowed incorrectly

If objects in the vehicle interior are stowed incorrectly, they can slide or be thrown around and hit vehicle occupants. In addition, cup holders, open storage spaces and mobile phone brackets cannot always retain all objects they contain.

There is a risk of injury, particularly in the event of sudden braking or a sudden change in direction.

- ▶ Always stow objects in such a way that they cannot be thrown around in such situations.
- ▶ Always make sure that objects do not protrude from storage spaces, parcel nets or storage nets.
- ▶ Close the lockable storage spaces before starting a journey.
- ▶ Always stow and secure heavy, hard, pointed, sharp-edged, fragile or bulky objects in the trunk.

Observe the notes on loading the vehicle.

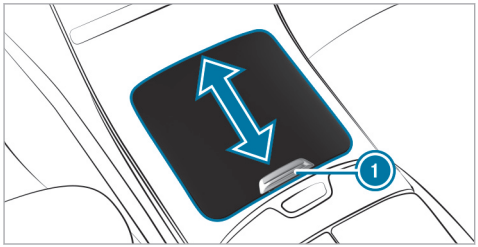

- **To open:** slide the cover of the storage compartment in the front center console all the way forwards in the direction of the arrow using handle (1).
- **To close:** briefly push handle (1) of the open cover of the storage compartment in the front center console forwards.
  The cover will automatically close the storage compartment in the front center console.

Locking/unlocking the glove box

WARNING Risk of injury due to objects being stowed incorrectly

If objects in the vehicle interior are stowed incorrectly, they can slide or be thrown around and hit vehicle occupants. In addition, cup holders, open storage spaces and mobile phone brackets cannot always retain all objects they contain.

There is a risk of injury, particularly in the event of sudden braking or a sudden change in direction.

- Always stow objects in such a way that they cannot be thrown around in such situations.
- Always make sure that objects do not protrude from storage spaces, parcel nets or storage nets.
- Close the lockable storage spaces before starting a journey.
- Always stow and secure heavy, hard, pointed, sharp-edged, fragile or bulky objects in the trunk.

Observe the notes on loading the vehicle.

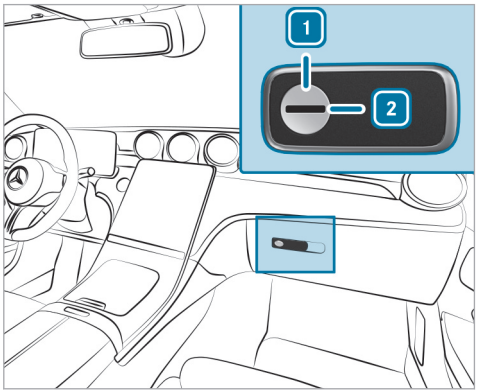

- Turn the emergency key a quarter turn clockwise [2] (to lock) or counter-clockwise [1] (to unlock).

Through-loading feature in the rear bench seat (EASY-PACK Quickfold)

Folding the rear seat backrests forward

WARNING Risk of becoming trapped when adjusting the seats

When you adjust a seat, you may trap yourself or a vehicle occupant.

▶ When adjusting a seat, make sure that no one has any body parts in the sweep of the seat.

WARNING Risk of an accident because the seat backrest is not engaged

The seat backrest may fold forwards.

There is a risk of the following, in particular:

- The vehicle occupant may be pressed against the seat belt. The seat belt cannot protect as intended and could cause additional injury.
- A child restraint system is no longer properly supported or properly positioned and may no longer fulfill its function as intended.
- The seat backrest cannot restrain objects or goods in the trunk or cargo compartment.

Always ensure that the seat backrest is engaged, especially:

- After the seat has been adjusted.
- After the cargo compartment enlargement has been folded forwards

Prior to use, make sure that the red marking of the lock verification indicator is no longer visible. Otherwise, the seat backrest is not locked.

Always ensure that all vehicle occupants have their seat belts fastened correctly and are sitting properly. Particular attention must be paid to children.

Requirements

- The rear seat backrest head restraints are fully inserted.
- The rear armrest has been folded up.

If you no longer require the folded-down rear seat backrest as a load area, fold the backrest back into place.

▶ Ensure that the center seat backrest is in an upright position and locked to the left seat backrest (→ page 178).

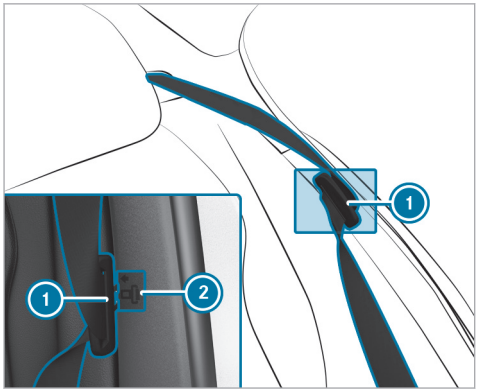

▶ Press the seat belt tongue of seat belt ① into marked position ②.

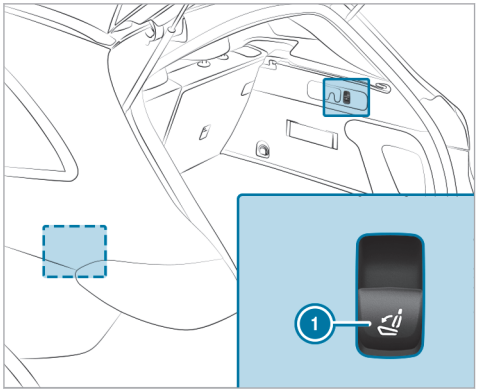

▶ **To fold the left seat backrest forward:** briefly pull left button ①.
The left and center seat backrests fold forwards.

If the left seat backrest is not locked with the center seat backrest, this will be shown on the driver display.

▶ **To fold the right seat backrest forward:** briefly pull right button ①.
The right seat backrest will fold forwards.

Folding the rear seat backrest back

⚠ **WARNING** Risk of becoming trapped when adjusting the seats

When you adjust a seat, you may trap yourself or a vehicle occupant.

▶ When adjusting a seat, make sure that no one has any body parts in the sweep of the seat.

⚠ **WARNING** Risk of an accident because the seat backrest is not engaged

The seat backrest may fold forwards.

There is a risk of the following, in particular:

- The vehicle occupant may be pressed against the seat belt. The seat belt cannot protect as intended and could cause additional injury.

- A child restraint system is no longer properly supported or properly positioned and may no longer fulfill its function as intended.
- The seat backrest cannot restrain objects or goods in the trunk or cargo compartment.

Always ensure that the seat backrest is engaged, especially:

- After the seat has been adjusted.
- After the cargo compartment enlargement has been folded forwards

Make sure that the red marking of the lock verification indicator is no longer visible. Otherwise, the seat backrest is not locked.

Always ensure that all vehicle occupants have their seat belts fastened correctly and are sitting properly. Particular attention must be paid to children.

NOTE Damage caused by trapping the seat belt when folding back the seat backrest

The seat belt could become trapped and thus damaged when the seat backrest is folded back.

▶ Make sure that the seat belt is not trapped when folding back the seat backrest.

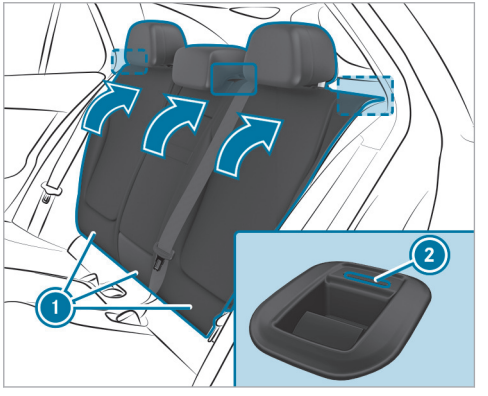

F254 0138 13

▶ Move the driver's or front passenger seat forwards, if necessary.

▶ Swivel seat backrest ① back until it engages. If the seat backrest is not engaged and locked in place, red lock verification indicator ② will be visible.

Locking the release catch of the center rear seat backrest

WARNING Risk of accident if the rear bench seat, rear seat and seat backrest are not engaged

The rear bench seat, rear seat and seat backrest may fold forwards, even when you are driving.

- As a result, the vehicle occupant will be pushed into the seat belt with increased force. The seat belt will not be able to protect as intended and could cause additional injury.
- Objects or loads in the trunk or cargo compartment will not be restrained by the seat backrest.

▶ Make sure that the rear bench seat, the rear seat and the seat backrest are engaged before every trip.

If the left and right seat backrests are not engaged and locked in place, this will be shown on the driver's display. If the center seat backrest is not engaged and locked in place, the red lock verification indicator will be visible.

Requirements:
- The left and center seat backrests are engaged and joined together.

You can lock the center seat backrest release catch if you want to secure the cargo compartment against unauthorized access. The center seat backrest can then be folded forwards only together with the left seat backrest.

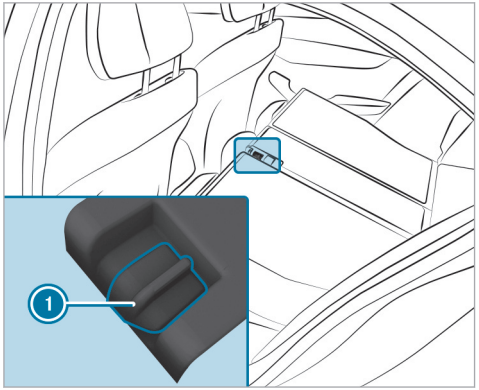

▶ Fold the center and left seat backrests forwards.

▶ To lock or unlock: slide catch (1) upwards or downwards.

F254 0138 13

Adjusting the angle of the rear seat backrests (cargo position)

⚠ WARNING Risk of accident if the rear bench seat, rear seat and seat backrest are not engaged

The rear bench seat, rear seat and seat backrest may fold forwards, even when you are driving.

- As a result, the vehicle occupant will be pushed into the seat belt with increased force. The seat belt will not be able to protect as intended and could cause additional injury.
- Objects or loads in the trunk or cargo compartment will not be restrained by the seat backrest.

▶ Make sure that the rear bench seat, the rear seat and the seat backrest are engaged before every trip.

To enlarge the cargo compartment, you can adjust the seat backrests so that they are 10 degrees steeper (cargo position).

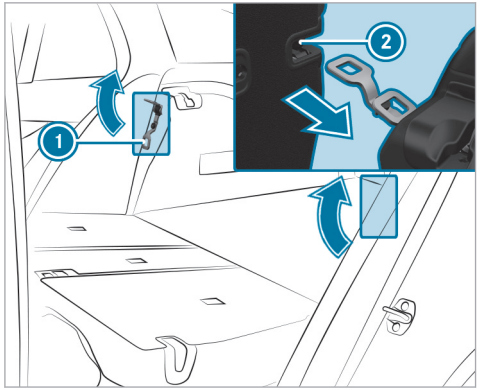

- Fold the seat backrest forwards (→ page 36).
- Move bracket ① in the direction of the arrow.

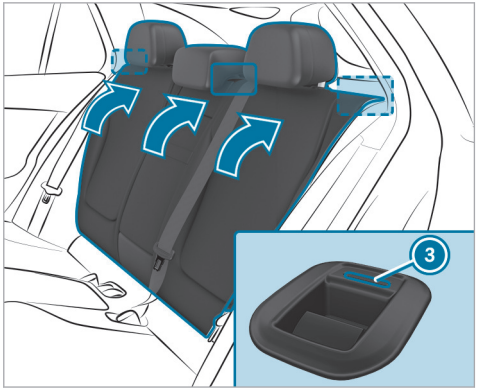

- Push seat backrest ② back to bracket ① until the backrest engages.
  If the seat backrest is not engaged and locked in place, red lock verification indicator ③ will be visible.

Cargo compartment cover

Extending/retracting the cargo compartment cover

WARNING Risk of injury or death due to poorly secured objects

The cargo compartment cover alone cannot secure or restrain heavy objects, items of luggage or heavy loads.

You could be hit by an unsecured load, particularly in the event of abrupt changes in direction, sudden braking or an accident.

- Always stow objects in such a way that they cannot be thrown around.
- Secure objects, luggage or loads against slipping or tipping over, e.g. by using tie downs, even if you are using the cargo compartment cover.

NOTE Damage to the cargo compartment cover when loading the vehicle

The cargo compartment cover may be damaged when the vehicle is being loaded.

- Do not place any objects above the lower edge of the side windows or on the cargo compartment cover.

The cargo compartment cover is attached behind the seat backrest of the rear bench seat.

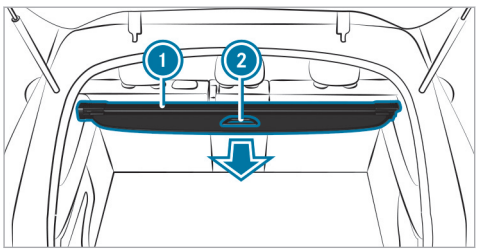

- **To extend:** pull cargo compartment cover (1) back by grab handle (2) and hook it into the holders on the left and right.
- **To retract:** unhook cargo compartment cover (1) from the holders on the left and right and guide it forwards by grab handle (2) until it is fully retracted.

Installing and removing the cargo compartment cover

Requirements

- The cargo compartment cover is retracted.

Removing the cargo compartment cover

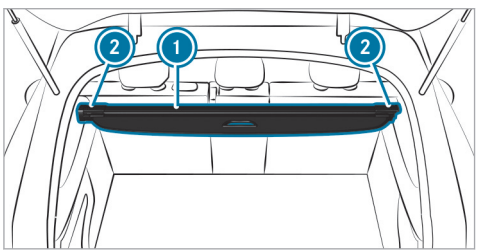

- Press in the end cap of cargo compartment cover (1) on the right- or left-hand side.
- Push cargo compartment cover (1) into recess (2) on the opposite side.
- Take cargo compartment cover (1) out by pulling it upwards.

Installing the cargo compartment cover

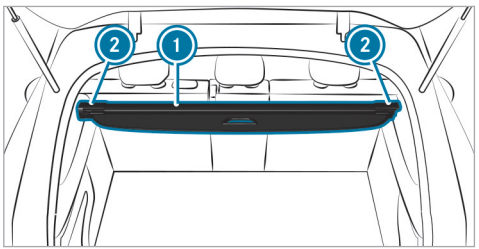

- Press in the end cap of cargo compartment cover (1) on the opposite side and insert cargo compartment cover (1) into other recess (2).
- Slide the end cap outwards.

Stowing the cargo compartment cover

Depending on the vehicle version, the cargo compartment cover can be stowed under the cargo floor.

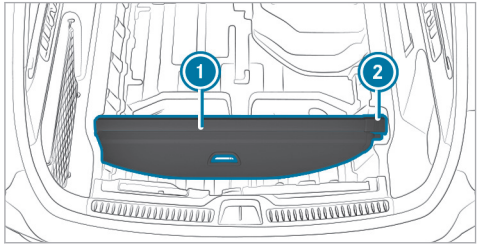

- **To insert:** position cargo compartment cover ① to the left under the trim and engage it in mounting ②.
- **To remove:** press the end cap of the cargo compartment cover inward and remove it from mounting ②.

Overview of the tie-down eyes

Observe the notes on loading the vehicle (→ page 170).

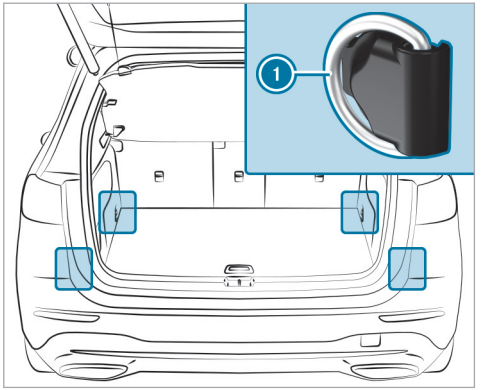

① Tie-down eyes

Overview of bag hooks

WARNING Risk of injury when using bag hooks with heavy objects

The bag hooks cannot restrain heavy objects or items of luggage.

Objects or items of luggage may be flung around and hit vehicle occupants.

- Only hang light objects on the bag hooks.
- Never hang hard, sharp-edged or fragile objects on the bag hooks.

Observe the notes on loading the vehicle (→ page 170).

The bag hook can bear a maximum load of 6.6 lbs (3 kg). Do not use it to secure a load.

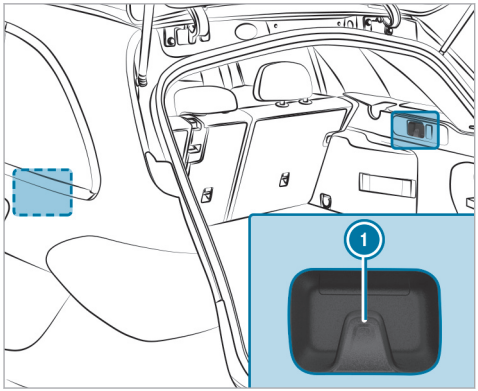

1 Bag hook

Attaching a roof luggage rack

WARNING Risk of accident due to exceeding the maximum roof load

The vehicle center of gravity and the usual driving characteristics as well as the steering and braking characteristics alter.

If you exceed the maximum roof load, the driving characteristics, as well as steering and braking, will be greatly impaired.

- Never exceed the maximum roof load and adjust your driving style.

Vehicle-specific weight information can be found on the vehicle identification plate.

NOTE Vehicle damage due to failure to observe the maximum permissible clearance height

If the vehicle height exceeds the maximum permissible clearance height, the roof and other vehicle parts may be damaged.

- Please observe the maximum clearance height indicated.
- If the vehicle exceeds the permissible clearance height, do not drive in.
- Take the modified vehicle height into account in the case of roof superstructures or other carrier systems.

NOTE Damage to the panorama roof with power tilt/sliding panel due to non-approved roof luggage racks

The panorama roof with power tilt/sliding panel may be damaged by the roof luggage rack if you attempt to open it when using a roof luggage rack not tested and approved for Mercedes-Benz.

- When a roof luggage rack is installed, open the panorama roof with power tilt/sliding panel only if this has been tested and approved for Mercedes-Benz.

The panorama roof with power tilt/sliding panel may be raised to allow ventilation of the vehicle interior.

- Secure the roof luggage rack to the roof railing.
- Observe the manufacturer's installation instructions.

Cup holder

Installing or removing the cup holder in the center console

WARNING - Risk of accident or injury when using the cup holder while the vehicle is moving

The cup holder cannot secure containers while the vehicle is moving.

If you use a cup holder while the vehicle is moving, the container may be flung around and liquids may be spilled. The vehicle occupants may come into contact with the liquid and if it is hot, they could be scalded. You could be distracted from traffic conditions and you may lose control of the vehicle.

- Only use the cup holder when the vehicle is stationary.
- Only use the cup holder for containers of the right size.
- Close the container, particularly if the liquid is hot.

WARNING Risk of injury due to objects being stowed incorrectly

If objects in the vehicle interior are stowed incorrectly, they can slide or be thrown around and hit vehicle occupants. In addition, cup holders, open storage spaces and mobile phone brackets cannot always retain all objects they contain.

There is a risk of injury, particularly in the event of sudden braking or a sudden change in direction.

- Always stow objects in such a way that they cannot be thrown around in such situations.
- Always make sure that objects do not protrude from storage spaces, parcel nets or storage nets.
- Close the lockable storage spaces before starting a journey.
- Always stow and secure heavy, hard, pointed, sharp-edged, fragile or bulky objects in the trunk.

Observe the notes on loading the vehicle (→ page 170).

Installing

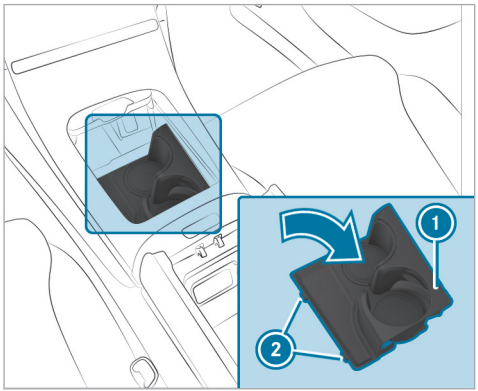

▶ Insert two lugs ② into the recesses in the trim and swing cup holder ① into the compartment until it engages.

Removing

The cup holder can be removed for cleaning.

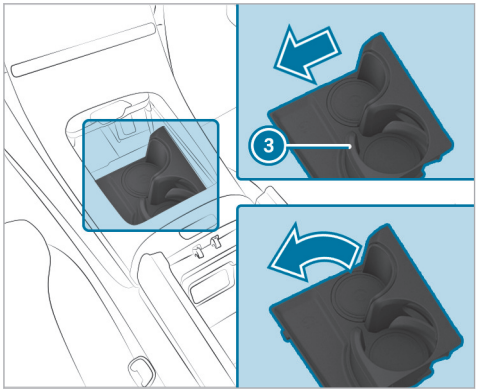

▶ Push the side wall of rear beverage compartment ③ to the left until the cup holder releases and swing the cup holder out upwards.

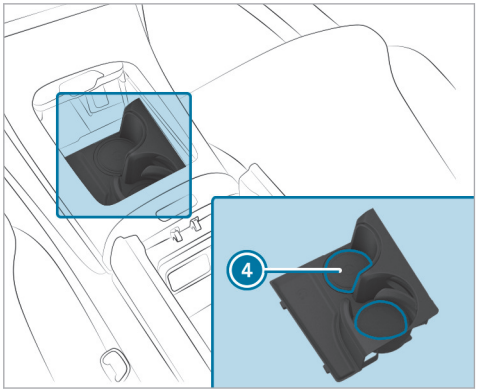

Insert mats ④ in the cup holder beverage compartments can be removed for cleaning.

▶ To do so, use a suitable tool to push the insert mats out of their mounting from the rear of the removed cup holder.

▶ Reinsert the cup holder after cleaning.

Using the cup holder

ⓘ Check whether the beverage container is held firmly by the cup holder. Some beverage containers will not be secured adequately in the cup holder due to their shape or size.

The side wall of the front beverage compartment can be retracted and extended manually.

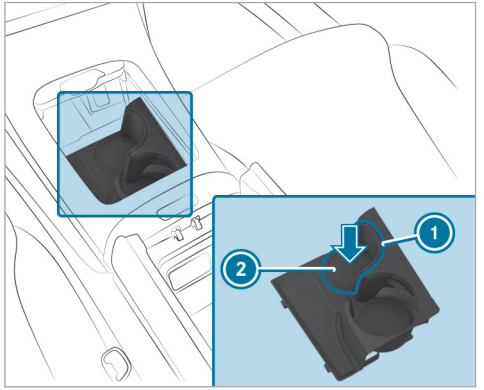

▶ Gently push a beverage container into the bottom ② of the beverage compartment.
The side panel will automatically extend to the left to secure the beverage container.

Alternatively, you can extend the side wall of the beverage compartment by pressing lightly on grooved surface ①.

Retracting the side wall

When the front beverage compartment is not in use, the side panel can be retracted manually. The cup holder's holding function will then no longer be available.

▶ Push the side panel back in the direction of the arrow until it engages in correct position ③.

Sockets

Using the 12 V socket

Requirements

- Connect only devices up to a maximum of 180 W (15 A).

Depending on the vehicle equipment, the vehicle has the following 12 V sockets:

- In the front passenger footwell
- In the cargo compartment

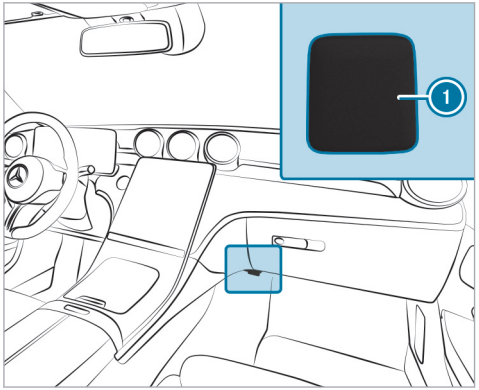

Example: 12 V socket in the front passenger footwell

▶ Fold up the cap of socket 1.

▶ Insert the plug of the device.

Using the 115 V socket in the rear passenger compartment

⚠ **DANGER** Risk of fatal injuries due to a damaged connecting cable or a damaged socket

You could receive an electric shock if the connecting cable or the 115 V power socket is pulled out of the trim or is damaged or wet.

▶ Use only connecting cables that are dry and free of damage.

▶ When the vehicle is switched off, make sure that the 115 V power socket is dry.

▶ Immediately have the 115 V power socket checked or replaced at a qualified specialized workshop if it is damaged or has been pulled out of the trim.

▶ Never plug the connecting cable into a 115 V power socket that is damaged or has been pulled out of the trim.

DANGER Risk of death due to using the socket incorrectly

In particular, you could receive an electric shock:

- If you touch the inside of the socket
- If you insert unsuitable devices or objects into the socket

▶ Do not touch the inside of the socket.

▶ Only connect suitable devices to the socket.

Make sure that no liquids get into the 115 V socket.

When the 115 V socket is not in use, keep the socket flap closed.

Requirements

- Only connect devices with a suitable plug which conforms to the standards specific to the country you are in.
- Only connect devices up to a maximum of 150 W.
- Do not use multiple socket outlets.

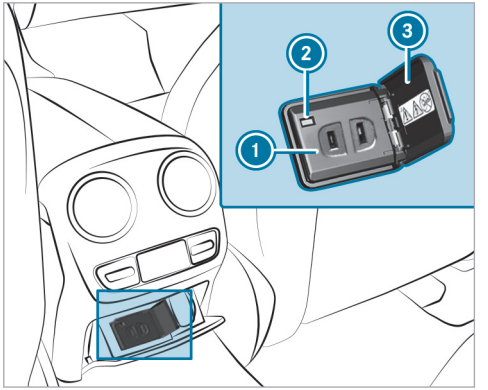

▶ Open socket flap ③.

▶ Insert the plug of the device into 115 V socket ①.
When the on-board electrical system voltage is sufficient, indicator lamp ② lights up.

USB ports

Depending on its equipment, the vehicle has the following USB ports:

- In the storage compartment in the front center console
- In the storage compartment under the front armrest
- In the rear passenger compartment center console

Depending on the vehicle equipment, the vehicle has either one or two USB ports in the storage compartment in the front center console and beneath the front armrest.

Depending on the vehicle equipment, the vehicle has two USB ports in the rear passenger compartment center console.

You can charge a USB device, such as a mobile phone, at the USB ports using a suitable charging cable. Depending on the vehicle equipment, devices can be charged with up to 20 V (5 A) when the vehicle is switched on.

Wireless charging of the mobile phone and connection with the exterior antenna

Notes on wirelessly charging a mobile phone

WARNING Risk of injury due to objects being stowed incorrectly

If objects in the vehicle interior are stowed incorrectly, they can slide or be thrown around and hit vehicle occupants. In addition, cup holders, open stowage spaces and mobile phone receptacles cannot always retain all objects within.

There is a risk of injury, particularly in the event of sudden braking or a sudden change in direction.

- Always stow objects so that they cannot be thrown around in such situations.
- Always make sure that objects do not protrude from stowage spaces, parcel nets or stowage nets.
- Close the lockable stowage spaces before starting a journey.
- Always stow and secure heavy, hard, pointed, sharp-edged, fragile or bulky objects in the trunk/cargo compartment.

Observe the notes on loading the vehicle.

WARNING Risk of fire from placing objects in the mobile phone storage compartment

Placing other objects in the mobile phone storage compartment could constitute a fire hazard.

- Apart from a mobile phone, do not place any other objects in the mobile phone storage compartment, especially those made of metal.

NOTE Damage to objects caused by placing them in the mobile phone storage compartment

If objects are placed in the mobile phone storage compartment, these may be damaged by electromagnetic fields.

- Do not place credit cards, storage media, ski passes or other objects sensitive to electromagnetic fields in the mobile phone storage compartment.

NOTE Damage to the mobile phone stowage compartment caused by liquids

If liquids enter the mobile phone stowage compartment, the compartment may be damaged.

- Ensure that no liquids enter the mobile phone stowage compartment.

Always observe the notes for persons with electronic medical aids (→ page 85).

- Depending on the vehicle equipment, the mobile phone is connected to the vehicle's exterior antenna via the charging module.
- The charging function and wireless connection of the mobile phone to the vehicle's exterior antenna are available only if the vehicle is switched on.

- Small mobile phones may not be able to be charged in every position of the mobile phone stowage compartment.
- Large mobile phones that do not rest flat in the mobile phone stowage compartment may not be able to be charged or connected with the vehicle's exterior antenna.
- The mobile phone may heat up during the charging process. This may also depend on the applications (apps) currently open in the background.
- To ensure more efficient charging and connection with the vehicle's exterior antenna, remove the protective cover from the mobile phone. Protective covers that are necessary for wireless charging are an exception.

Wirelessly charging a mobile phone in the front

WARNING Risk of injury due to objects being stowed incorrectly

If objects in the vehicle interior are stowed incorrectly, they can slide or be thrown around and hit vehicle occupants. In addition, cup holders, open storage spaces and mobile phone brackets cannot always retain all objects they contain.

There is a risk of injury, particularly in the event of sudden braking or a sudden change in direction.

- ▶ Always stow objects in such a way that they cannot be thrown around in such situations.
- ▶ Always make sure that objects do not protrude from storage spaces, parcel nets or storage nets.
- ▶ Close the lockable storage spaces before starting a journey.
- ▶ Always stow and secure heavy, hard, pointed, sharp-edged, fragile or bulky objects in the trunk.

Observe the notes on loading the vehicle.

Requirements

- The mobile phone is suitable for wireless charging.

A list of compatible mobile phones can be found at: https://www.mercedes-benz-mobile.com/

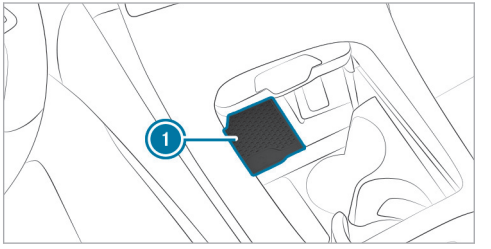

- ▶ Place the mobile phone in the front storage compartment as centrally as possible with the display facing upwards on mat (1) next to the USB ports.

When the charging symbol is shown on the driver's display, the mobile phone is being charged. In addition, malfunctions when the mobile phone is being charged are shown on the central display.

ⓘ The mat can be removed for cleaning, e.g. using clean, lukewarm water.

Installing/removing the floor mats

WARNING Risk of accident due to objects in the driver's footwell

Objects in the driver's footwell may impede pedal travel or block a depressed pedal.

This jeopardizes the operating and road safety of the vehicle.

- Stow all objects in the vehicle securely so that they cannot get into the driver's footwell.
- Always install the floor mats securely and as prescribed in order to ensure that there is always sufficient room for the pedals.
- Do not use loose floor mats and do not place floor mats on top of one another.

Installing floor mats

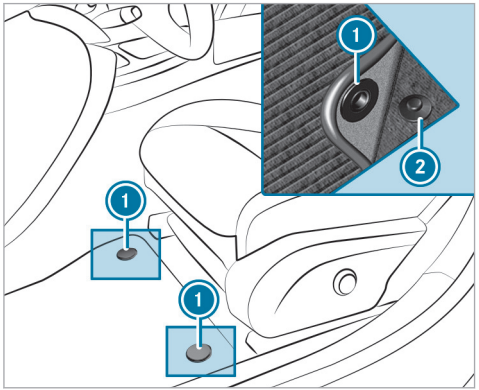

- Move the corresponding seat backwards and lay the floor mat in the footwell.
- Press studs (1) onto holders (2).
- Adjust the corresponding seat.

Removing floor mats

- Pull the floor mat off holders (2).
- Remove the floor mat.

F254 0138 13

Exterior lighting

Information about lighting systems and your responsibility

The various lighting systems of the vehicle are only aids. The driver of the vehicle is responsible for correct vehicle illumination in accordance with the prevailing light and visibility conditions, legal requirements and traffic situation.

Light switch

Operating the light switch

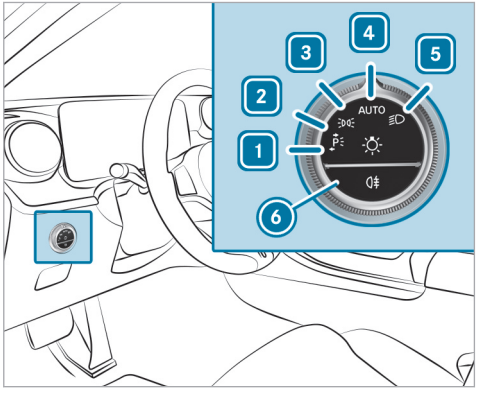

1 Left-hand parking lights
2 Right-hand parking lights
3 Standing lights and license plate lamp
4 AUTO Automatic driving lights (preferred light switch position)
5 Low beam/high beam
6 Activates or deactivates the rear fog light.

When low beam is activated, the indicator lamp for the standing lights will be deactivated and replaced by the low-beam indicator lamp.

▶ Always park your vehicle safely using sufficient lighting, in accordance with the relevant legal stipulations.

! NOTE Battery discharging by operating the parking lamps

Do not have the parking lamps switched on over a period of several hours.

If the battery is insufficiently charged, the standing lights or parking lights will be switched off automatically to facilitate the next engine start.

The exterior lighting (except standing and parking lights) will switch off automatically when the driver's door is opened.

- Observe the notes on locator lighting (→ page 202).

Switching on accident scene lighting

▶ Switch off the vehicle.

▶ Switch on the hazard warning lamps (→ page 48).

▶ Turn the light switch from the AUTO position to the position.
The low beam will be switched on despite the vehicle being switched off.

The accident scene lighting will be switched off if:

- you switch off the hazard warning lights.
- you turn the light switch back to AUTO.
- the battery is insufficiently charged.

Automatic driving lights function

When the vehicle is switched on, the side lamps, low beam and daytime running lights will be switched on automatically depending on the ambient light.

⚠ WARNING Risk of accident when the low beam is switched off in poor visibility

When the light switch is set to AUTO, the low beam may not be switched on automatically if there is fog, snow or other causes of poor visibility such as spray.

▶ In such cases, turn the light switch to .

The automatic driving lights are only an aid. You are responsible for the vehicle lighting.

Switching the rear fog light on/off

Requirements

- The light switch is in the or AUTO position.

▶ Press button .

Please observe the country-specific laws on the use of rear fog lamps.

Operating the combination switch for the lights

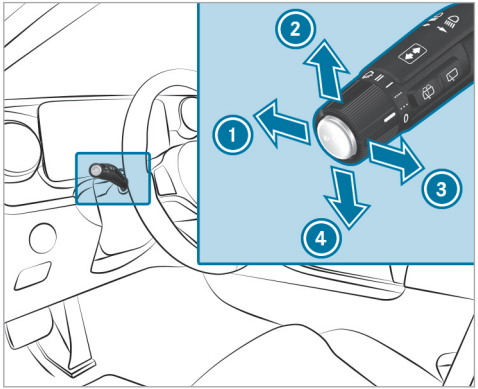

1. High beam
2. Turn signal light, right
3. Headlamp flashing
4. Turn signal light, left

▶ Use the combination switch to select the desired function.

Switching on high beam

- Turn the light switch to the [≡D] or [AUTO] position.
- Push the combination switch in the direction of arrow ①.
  When high beam is activated, the indicator lamp for low beam [≡D] will be deactivated and replaced by the indicator lamp for high beam [≡D].

Switching off high beam

- Push the combination switch in the direction of arrow ① or pull it in the direction of arrow ③.

Headlamp flashing

- Pull the combination switch in the direction of arrow ③.

Turn signals

- **To indicate briefly:** push the combination switch briefly to the point of resistance in the direction of arrow ② or ④.
  The corresponding turn signal light will flash three times.
- **To indicate permanently:** push the combination switch beyond the point of resistance in the direction of arrow ② or ④.

Vehicles with Active Lane Change Assist:

- A turn signal indicator activated by the driver may continue to operate for the duration of the lane change.
- If the driver indicated directly beforehand but a lane change was not immediately possible, the turn signal indicator may activate automatically.

Activating/deactivating the hazard warning lights

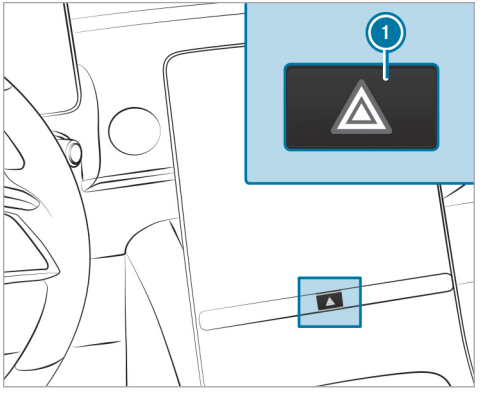

- Press button ①.

The hazard warning lights will switch on automatically if:

- the air bag has been deployed.

DIGITAL LIGHT adaptive functions

Function of dynamic low beam

You can watch an animation on this topic via the following link:

With this system, the headlamps adapt to the driving and weather situation. It also provides extended functions for improved illumination of the road.

ⓘ The availability of the functions is country-dependent.

The system comprises the following functions:

- Active Headlamps (→ page 195)
- Topographical compensation (→ page 195)

The system will be active only when it is dark.

Active headlamps function

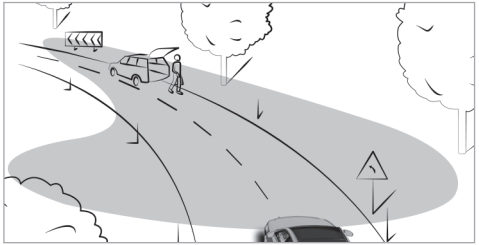

- The headlamps will follow your steering movements.
- Relevant areas will be better illuminated during a journey.

The functions will be active when the low beam is switched on.

Function of the topographical compensation

Based on available map data, the lighting system responds pre-emptively to different road heights. This means that the headlamp range will remain virtually constant when you are driving uphill or downhill.

F254 0138 13

ⓘ Only vehicles with a multimedia system with navigation have this function.

Assistance functions of DIGITAL LIGHT

DIGITAL LIGHT visually expands on the driver assistance systems by projecting the assistant displays in front of the vehicle while it is in motion. DIGITAL LIGHT can therefore help the driver in critical situations.

ⓘ The availability of the functions is country-dependent.

ⓘ The assistance functions of DIGITAL LIGHT may be an on-demand feature (→ page 77).

The system will remain active when Highbeam Assist is switched on.

ⓘ Depending on the country in which you are currently driving, certain functions may be disabled due to different legal requirements, even if they are enabled in the multimedia system. When you cross a border, the vehicle will automatically adapt to the applicable requirements.

Spotlight

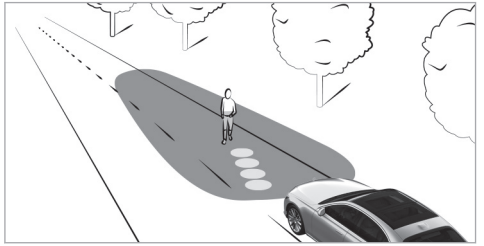

The spotlight function runs in the background and will flash the headlamps in four short bursts at persons detected within the lane markings. You will also be made aware of the position of the person by a projected symbol.

The function will be active in the following circumstances:

- You are driving in an unlit area.
- The system detects a lane marking.

Notes

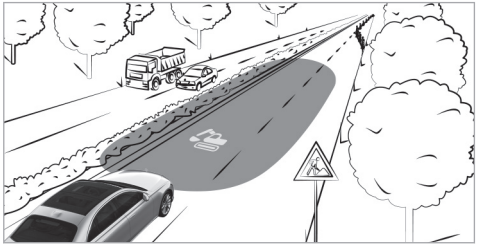

If Traffic Sign Assist detects a roadworks zone, the system will provide support as follows:

- A corresponding symbol will be projected onto the road when you enter a roadworks zone.

Observe the system limitations of Traffic Sign Assist (→ page 342).

Collision warning

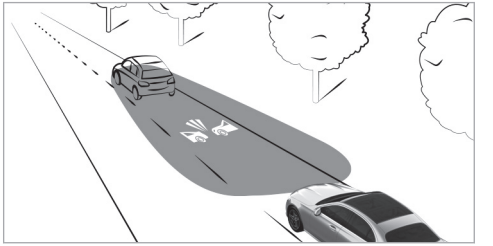

If you fall below the safe distance at speeds of at least 19 mph (30 km/h), a collision warning symbol will be projected onto the road.

Observe the system limitations of Active Brake Assist (→ page 337).

Lane change warning

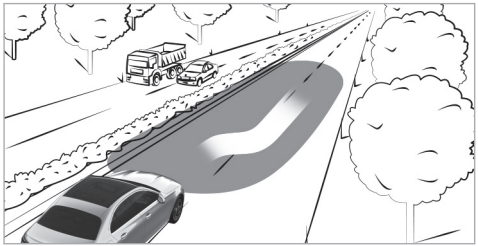

During assisted lane changes at speeds of at least 19 mph (30 km/h), the course of the lane change will flash.

Observe the system limitations of Active Lane Change Assist (→ page 333).

Lane keeping and blind spot warning

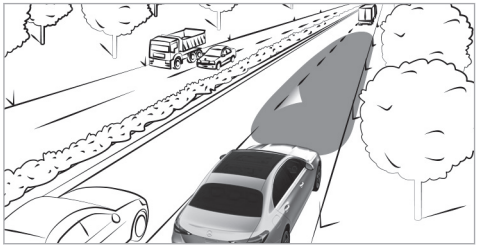

At speeds of at least 19 mph (30 km/h), a triangle that indicates a lane correction and its direction will be projected onto the road in the following cases:

- You leave the lane unintentionally.

  Observe the system limitations of Active Lane Keeping Assist (→ page 350).
- You switch on the turn signal light while an object or obstacle is in your blind spot.

  Observe the system limitations of Active Blind Spot Assist (→ page 347).

Activating/deactivating dynamic low beam

Requirements

- The vehicle is switched on.

Multimedia system:

→ ⌂ ▸▸ Settings ▸▸ Light ▸▸ DIGITAL LIGHT

▶ Activate or deactivate Dynamic Low Beam.

Activating/deactivating enhanced assistance functions

ⓘ The availability of the functions is country-dependent.

ⓘ This function is an on-demand feature (→ page 77).

▶ Select Supporting Projections.

▶ Activate or deactivate the desired projections.

▶ Switch Projection for greeting/farewell on or off.

If the locator lighting or the exterior switch-off delay time is activated, a high-resolution greeting or farewell scene will be played back for a short period of time when the vehicle is

opened or switched off. You can choose between the Digital Rain and Star Wave sequences.

ⓘ More information on locator lighting (→ page 202)
More information on the exterior switch-off delay time (→ page 202)

Adaptive Highbeam Assist

Adaptive Highbeam Assist function

⚠ **WARNING** Risk of accident despite Adaptive Highbeam Assist

Adaptive Highbeam Assist does not react to:

- Road users without lights, e.g. pedestrians
- Road users with poor lighting, e.g. cyclists
- Road users whose lighting is obstructed, e.g. by a barrier

On very rare occasions, Adaptive Highbeam Assist may fail to recognize other road users with their own lighting, or may recognize them too late.

In these, or in similar situations, the automatic high beam will not be deactivated or will be activated despite the presence of other road users.

▶ Always observe the road and traffic conditions carefully and switch off the high beam in good time.

Adaptive Highbeam Assist cannot take into account road, weather or traffic conditions.

Detection may be restricted in the following cases:

- In poor visibility, e.g. fog, heavy rain or snow
- if there is dirt on the sensors or the sensors are obscured

Adaptive Highbeam Assist is only an aid. You are responsible for adjusting the vehicle's lighting to the prevailing light, visibility and traffic conditions.

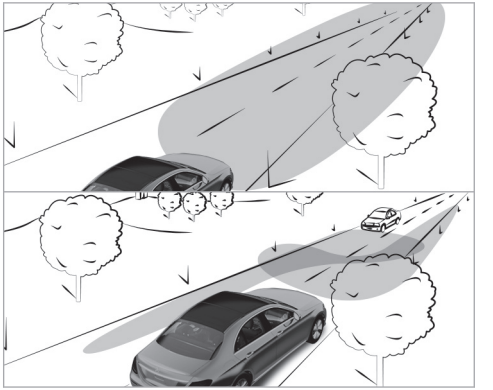

Adaptive Highbeam Assist automatically switches between the following types of light:

- Low-beam headlamps
- High beam

At speeds greater than 19 mph (30 km/h):

- If no other road users are detected, high beam will switch on automatically.

High beam will switch off automatically in the following cases:

- At speeds below 16 mph (25 km/h)
- If other road users are detected
- If street lighting is sufficient

ⓘ The system's optical sensor is located behind the windshield near the overhead control panel.

Switching Adaptive Highbeam Assist on/off

⚠ **WARNING** Risk of accident despite Adaptive Highbeam Assist

Adaptive Highbeam Assist does not react to:

- Road users without lights, e.g. pedestrians
- Road users with poor lighting, e.g. cyclists
- Road users whose lighting is obstructed, e.g. by a barrier

On very rare occasions, Adaptive Highbeam Assist may fail to recognize other road users with their own lighting, or may recognize them too late.

In these, or in similar situations, the automatic high beam will not be deactivated or will be activated despite the presence of other road users.

▶ Always observe the road and traffic conditions carefully and switch off the high beam in good time.

Switching on

▶ Turn the light switch to the AUTO position.

▶ Switch on high beam using the combination switch.
If Adaptive Highbeam Assist is activated, the indicator lamp will light up on the driver's display.

Switching off

▶ Switch off high beam using the combination switch.

Adaptive Highbeam Assist Plus

Adaptive Highbeam Assist Plus function (Canada)

⚠ **WARNING** Risk of accident despite Adaptive Highbeam Assist Plus

Adaptive Highbeam Assist Plus does not react to:

- Road users without lights, e.g. pedestrians
- Road users with poor lighting, e.g. cyclists
- Road users whose lighting is obstructed, e.g. by a barrier

On very rare occasions, Adaptive Highbeam Assist Plus may fail to recognize other road users with their own lighting, or may recognize them too late.

In these, or in similar situations, the automatic high beam will not be deactivated or will be activated despite the presence of other road users.

▶ Always observe the road and traffic conditions carefully and switch off the high beam in good time.

Adaptive Highbeam Assist Plus cannot take into account road, weather or traffic conditions.

Detection may be restricted in the following cases:

- In poor visibility, e.g. fog, heavy rain or snow
- if there is dirt on the sensors or the sensors are obscured

Adaptive Highbeam Assist Plus is only an aid. You are responsible for adjusting the vehicle's lighting to the prevailing light, visibility and traffic conditions.

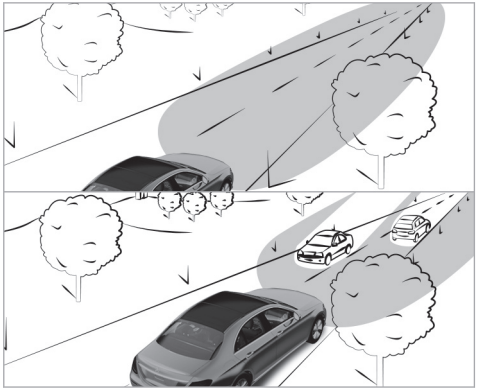

Adaptive Highbeam Assist Plus automatically switches between the following types of light:

- Low beam
- Partial high beam
- High beam
- ULTRA RANGE Highbeam

ULTRA RANGE Highbeam increases the brightness of the cone of light close to the legally permitted maximum.

Partial high beam does not include other road users in the high beam area. It does not dazzle them but enables full high-beam illumination for the driver apart from the excluded vehicles. Highly reflective signs are also illuminated with reduced brightness.

At speeds below 16 mph (25 km/h) or when there is sufficient street lighting:

- Partial high beam and high beam will be switched off automatically.

At speeds above 19 mph (30 km/h):

- If no other road users are detected, high beam will be switched on automatically.
- If other road users are detected, partial high beam will be switched on automatically.

at speeds below 25 mph (40 km/h):

- ULTRA RANGE Highbeam will switch off automatically.

At speeds above 31 mph (50 km/h):

- If no other road users are detected, the road is straight and it is not raining heavily, ULTRA RANGE Highbeam will be switched on automatically.
- If other road users are detected, partial high beam will be switched on automatically.
- If highly reflective signs are detected, ULTRA RANGE Highbeam will be switched off automatically.

ⓘ The system's optical sensor is located behind the windshield near the overhead control panel.

Switching Adaptive Highbeam Assist Plus on/off (Canada)

⚠ **WARNING** Risk of accident despite Adaptive Highbeam Assist Plus

Adaptive Highbeam Assist Plus does not react to:

- Road users without lights, e.g. pedestrians
- Road users with poor lighting, e.g. cyclists
- Road users whose lighting is obstructed, e.g. by a barrier

On very rare occasions, Adaptive Highbeam Assist Plus may fail to recognize other road users with their own lighting, or may recognize them too late.

In these, or in similar situations, the automatic high beam will not be deactivated or will be activated despite the presence of other road users.

▶ Always observe the road and traffic conditions carefully and switch off the high beam in good time.

Switching on

▶ Turn the light switch to the AUTO position.

▶ Switch on high beam using the combination switch.
If Adaptive Highbeam Assist Plus is activated, the indicator lamp will light up on the driver's display. When partial high beam or high beam is active, the corresponding blue indicator lamp will also light up.

Switching off

▶ Switch off high beam using the combination switch.

Switching the daytime running lights on/off

Multimedia system:

→ ⌂ ▸▸ Settings ▸▸ Light ▸▸ DIGITAL LIGHT

▶ Switch the Daytime Running Lights on or off.

ⓘ In vehicles without DIGITAL LIGHT headlamps, the daytime running lights can be switched on or off on the driving lights menu.

ⓘ Availability of the function is dependent on the respective country.

Setting the exterior lighting switch-off delay time

Multimedia system:

→ [⌂] ▸▸ Settings ▸▸ Light
▸▸ Interior/Exterior Lighting
▸▸ External Lighting Display

▶ Set a switch-off delay time.
After parking and locking the vehicle, the exterior lighting will be activated for the set time.

Switching locator lighting on/off

Multimedia system:

→ [⌂] ▸▸ Settings ▸▸ Light
▸▸ Interior/Exterior Lighting

▶ Activate or deactivate Locator Lighting.

When the function is activated, the exterior lighting will light up for 40 seconds after the vehicle is unlocked or the driver's door is opened when the vehicle is parked and not locked. When you start the vehicle, the locator lighting is switched off and automatic driving lights are activated.

Interior lighting

Adjusting the interior lighting

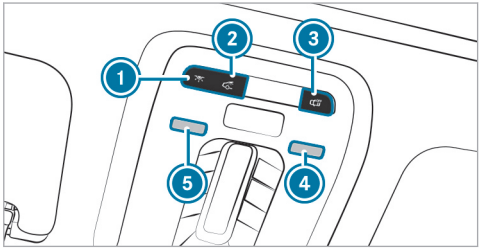

① Switches the front interior lighting on/off.

② Switches the rear interior lighting on/off.

③ Switches automatic interior lighting control on/off.

▶ **To switch reading lamps on/off:** hold your hand under the respective reading lamp ④ or ⑤.

Operating unit inside the grab handle (rear passenger compartment)

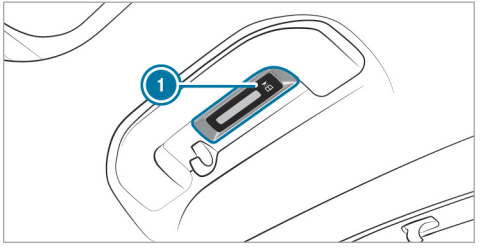

① Rear reading lamp

▶ **To switch on or off:** press button ①.

Adjusting the ambient lighting

Multimedia system:

→ [⌂] ▸▸ Comfort ▸▸ Ambient Light

Setting the color

▶ Select Color.

▶ Select Monochrome or Multi-color.

▶ Set the desired color or color scheme.

Adjusting the brightness

▶ Select Brightness.

▶ Adjust the brightness.

ⓘ Depending on the ambient light, the ambient lighting will automatically switch between day and night modes.

Activating the brightness for zones

▶ Select Brightness.

▶ Switch off Link Zones .
The Direct, Indirect and Accents zones can be set separately.

Activating effects

⚠ **WARNING** Risk of accident if ambient lighting and active ambient lighting effects are not switched on

The warning assistance effects will be fully active only when the relevant driving or driving safety systems are activated on the Driving Assistance menu.

▶ Make sure that the relevant driving or driving safety systems are activated.

ⓘ Observe the notes on driving systems and your responsibility; you may otherwise fail to recognize dangers (→ page 303).

▶ Select Effects.

▶ Activate the desired effect.

ⓘ Different effects will be available depending on the vehicle equipment.

Operating feedback effects

- Climate: If changes are made to the temperature setting in the vehicle, the color of the ambient lighting will change briefly.

Warning When Exiting

- If an object is detected in the blind spot while you are getting out of the vehicle, the ambient lighting in the affected door will flash red.

  Further information on the exit warning (→ page 347).

Multi-color Animation

- The chosen color combination will change at predefined intervals.

Switching the interior lighting switch-off delay time on/off

Multimedia system:

→ ⌂ ▸▸ Settings ▸▸ Light ▸▸ Interior/Exterior Lighting ▸▸ Internal Lighting Display

▶ Activate or deactivate Internal Lighting Display.
If this function is active, the interior lighting will be switched on for a short time after the end of the journey.

Windshield wiper and windshield washer system

Switching the windshield wipers on/off

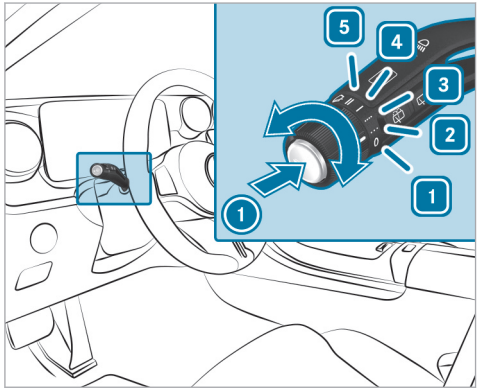

1 0 Windshield wipers off
2 ••• Automatic wiping, normal
3 •••• Automatic wiping, frequent
4 — Continuous wiping, slow
5 ═ Continuous wiping, fast

- Turn the combination switch to the corresponding position 1 - 5.
- **Single wipe:** press button 1 as far as the pressure point.
- **Wiping with washer fluid:** press button 1 beyond the pressure point.

ⓘ Observe the notes on washing the vehicle in a car wash (→ page 30).

Switching the rear window wiper on/off

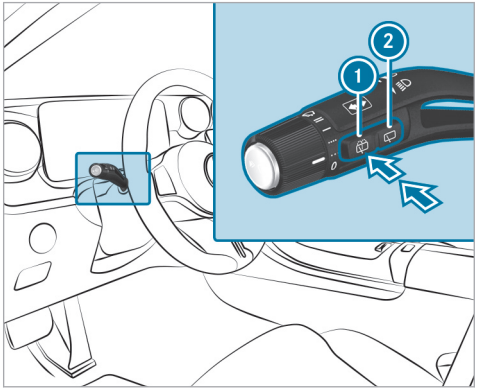

1 Single wipe/washing
2 Intermittent wiping

- **Single wipe:** press button 1 as far as the point of resistance.
- **Wiping with washer fluid:** press button 1 beyond the point of resistance.

▶ **Switching intermittent wiping on/off:** press button ②.
The [ ] symbol will appear on the driver's display when the rear window wiper is switched on.

Changing the windshield wiper blades

⚠ **WARNING** Risk of becoming trapped if the windshield wipers are switched on while wiper blades are being replaced

If the windshield wipers begin to move while you are changing the wiper blades, you can be trapped by the wiper arm.

▶ Always switch off the windshield wipers and vehicle before changing the wiper blades.

Moving the wiper arms into the replacement position

▶ Switch the vehicle on and then off again immediately.

▶ Within around 15 seconds, press the [ ] button on the combination switch for approximately three seconds (→ page 204).
The wiper arms will move into the replacement position.

ⓘ Depending on the production period of the vehicle, different variants of the wiper blades will have been installed.

Removing the wiper blades (variant 1)

▶ Fold the wiper arms away from the windshield.

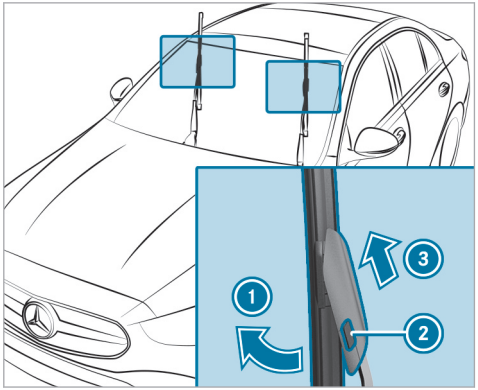

▶ Hold the wiper arm with one hand. With the other hand, turn the wiper blade away from the wiper arm in the direction of arrow ① as far as it will go.

▶ Press release knob ②.

▶ Remove the wiper blade in the direction of arrow ③ away from the wiper arm.

Removing the wiper blades (variant 2)

▶ Fold the wiper arms away from the windshield.

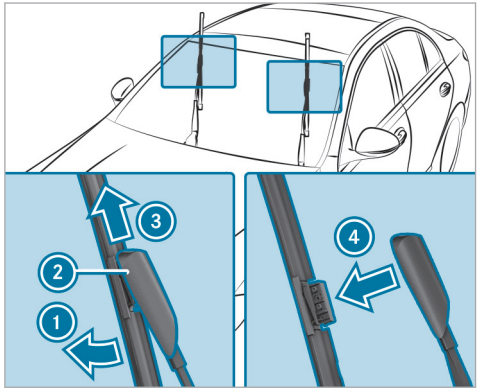

▶ Hold the wiper arm with one hand. With the other hand, turn the wiper blade away from the wiper arm in the direction of arrow ① as far as it will go.

▶ Slide catch ② in the direction of arrow ③ until it engages in the removal position.

▶ Remove the wiper blade from the wiper arm in the direction of arrow ④.

Installing the wiper blades (variant 1)

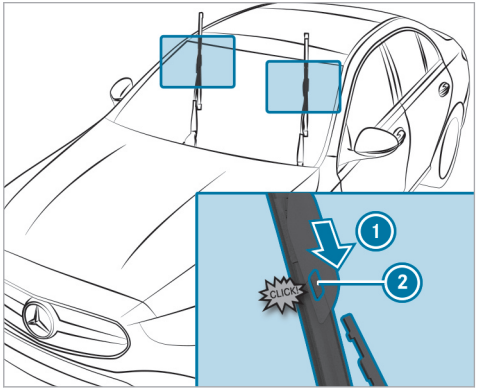

▶ Insert the new wiper blade in to the wiper arm in the direction of arrow ① until release knob ② engages.

▶ Make sure that the wiper blade is seated correctly.

▶ Fold the wiper arms back onto the windshield.

▶ Switch on the vehicle.

▶ Press the button on the combination switch.
The wiper arms will return to their original positions.

▶ Switch off the vehicle.

Installing the wiper blades (variant 2)

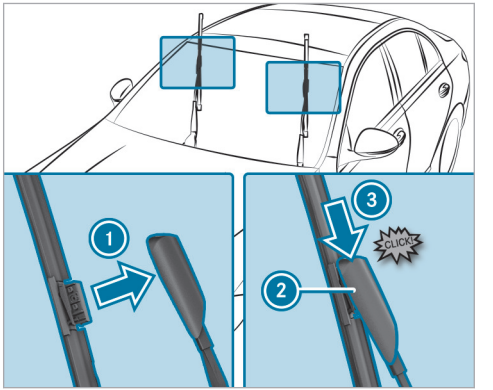

- Insert the new wiper blade into the wiper arm in the direction of arrow 1.
- Slide catch 2 in the direction of arrow 3 until it engages in the locking position.
- Make sure that the wiper blade is seated correctly.
- Fold the wiper arms back onto the windshield.
- Switch on the vehicle.
- Press the button on the combination switch.
  The wiper arms will return to their original positions.
- Switch off the vehicle.

Maintenance display

A maintenance display can be found at the tip of the blade on the newly installed wiper blades.

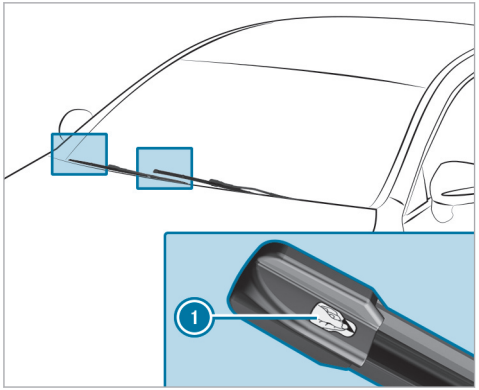

- Remove protective film 1 from the maintenance display.

When the color of the maintenance displays changes from black to yellow, you should replace the wiper blades.

Replacing the rear window wiper blade

WARNING Risk of becoming trapped if the windshield wipers are switched on while wiper blades are being replaced

If the windshield wipers begin to move while you are changing the wiper blades, you can be trapped by the wiper arm.

- Always switch off the windshield wipers and vehicle before changing the wiper blades.

Removing the wiper blade

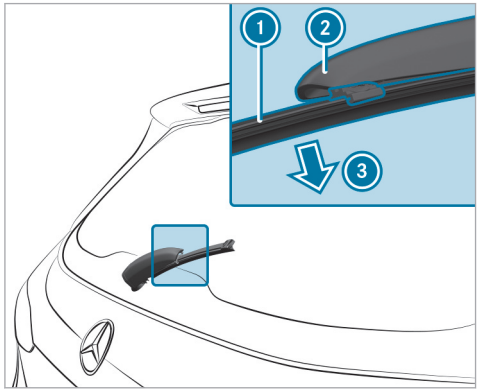

- Switch off the vehicle.
- Fold wiper arm ② away from the rear window until it engages in the replacement position.
- Unclip wiper blade ① from wiper arm ② and remove it in the direction of arrow ③.

Installing the wiper blade

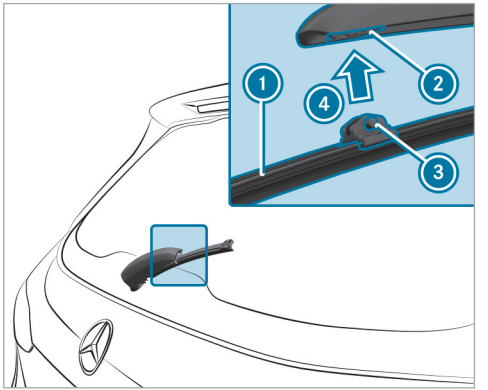

- Position wiper blade ① with both lugs ③ on holder ② on the wiper arm.
- Push wiper blade ① in the direction of arrow ④ until it engages in holder ②.
- Make sure that wiper blade ① is seated correctly.
- Fold the wiper arm from the replacement position back onto the rear window.

Mirrors

Operating the outside mirrors

WARNING Risk of accident due to adjusting the vehicle settings while the vehicle is in motion

You could lose control of the vehicle in the following situations in particular:

- If you adjust the driver's seat, the head restraint, the steering wheel or the mirror while the vehicle is in motion
- If you fasten your seat belt while the vehicle is in motion

- Before starting the vehicle: in particular, adjust the driver's seat, head restraint, steering wheel and mirror, and fasten your seat belt.

WARNING Risk of accident due to misjudgment of distance when using the front-passenger mirror

The outside mirror on the front passenger side reflects objects on a smaller scale. The objects in view are in fact closer than they appear.

- Therefore, always look over your shoulder to check the actual distance between you and the road users traveling behind you.

Adjusting the outside mirrors

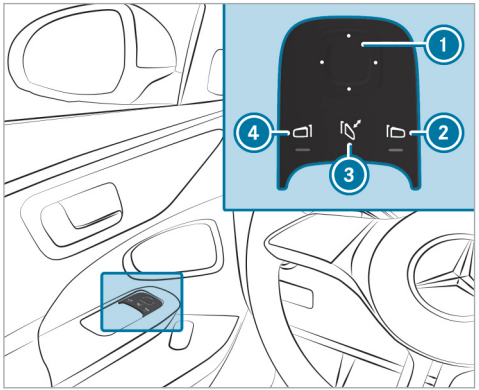

- Use button 2 or 4 to select the desired mirror.
- Use button 1 to adjust the position of the selected mirror.

Folding the outside mirrors in/out (vehicles with electrically folding outside mirrors)

- Briefly press button 3.

ⓘ If the battery has been disconnected or has discharged, the outside mirrors must be moved briefly using button 3. Only then will the automatic mirror folding function work properly.

Engaging the outside mirrors

If an outside mirror has been forcibly disengaged, proceed as follows.

- Vehicles without electrically folding outside mirrors: move the outside mirror into the correct position manually, until it engages audibly.
- Vehicles with electrically folding outside mirrors: press and hold button 3.
  You will hear a click and the mirror will audibly engage. The outside mirror will now be set to the correct position.

Automatic anti-glare mirrors function

WARNING Risk of acid burns and poisoning due to the anti-glare mirror electrolyte

Electrolyte may escape if the glass in an automatic anti-glare mirror breaks.

The electrolyte is hazardous to health and causes irritation. It must not come into contact with your skin, eyes, respiratory organs or clothing or be swallowed.

▶ If you come into contact with electrolyte, observe the following:
- Immediately rinse the electrolyte from your skin with water and seek medical attention.
- If electrolyte comes into contact with your eyes, immediately rinse them thoroughly with clean water and seek medical attention.
- If the electrolyte is swallowed, immediately rinse your mouth out thoroughly. Do not induce vomiting. Seek medical attention immediately.
- Immediately change out of clothing which has been contaminated with electrolyte.
- If an allergic reaction occurs, seek medical attention immediately.

The inside rearview mirror and the outside mirror on the driver's side will automatically go into anti-glare mode if light from a headlamp hits the sensor on the inside rearview mirror.

System limits

The system will not go into anti-glare mode if:
- The vehicle is switched off.
- Reverse gear is engaged.
- The interior lighting is switched on.

Front-passenger outside mirror parking position function

The parking position makes parking easier.

The front-passenger outside mirror will swivel downwards in the direction of the rear wheel on the front passenger's side when:
- The parking position is stored (→ page 211).
- The front-passenger mirror is selected.
- Reverse gear is engaged.

The front-passenger outside mirror will move back to its original position when:
- You shift the transmission to another transmission position.
- You are traveling at a speed greater than 9 mph (15 km/h).
- You press the button for the outside mirror on the driver's side.

Storing the parking position of the front-passenger outside mirror using reverse gear

Storing

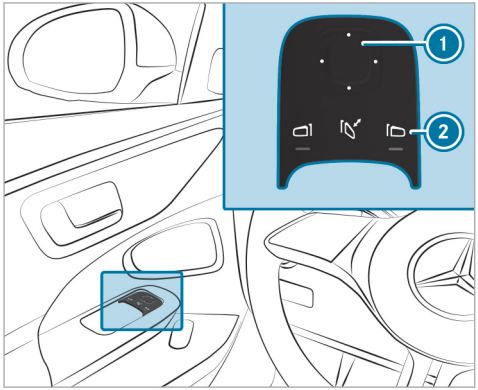

- Select the front-passenger outside mirror using button ②.
- Engage reverse gear.
- Move the front-passenger outside mirror into the desired parking position using button ①.

Calling up

- Select the front-passenger outside mirror using button ②.
- Engage reverse gear.
  The front-passenger outside mirror will move into the stored parking position.

Activating/deactivating the automatic mirror folding function

Multimedia system:

→ [⌂] ▸▸ Settings ▸▸ Vehicle ▸▸ Open/Close

- Activate or deactivate Automatic Mirror Folding.

Area permeable to radio waves on the windshield

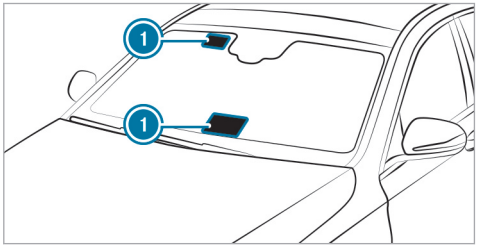

Radio-controlled equipment such as toll systems can be mounted only on areas ① of the windshield that are permeable to radio waves.

Areas permeable to radio waves ① are best visible from outside the vehicle when the windshield is illuminated with an external light source.

Note this position for vehicles with:

- Windshield heater

Overview of climate control systems

Notes on climate control

An interior air filter in combination with the prefilter in the engine compartment must always be used so that the air conditioning system, pollution level monitoring and the air filtration work correctly. Use filters recommended and approved by Mercedes-Benz. Always have maintenance work carried out at a qualified specialist workshop.

Overview of the THERMATIC climate bar

The indicator lamps indicate that the corresponding functions are activated.

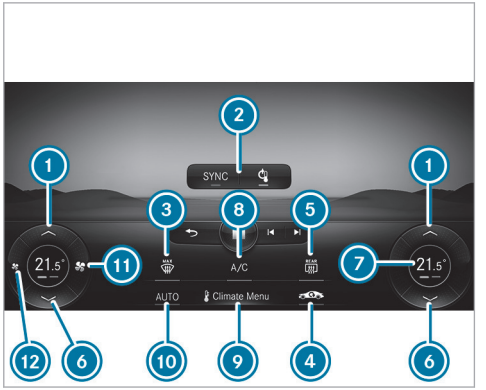

1. ▲ Increases the temperature
2. Upper display area of the climate bar with the examples of ⏻ switching climate control on/off (→ page 214) and SYNC synchronization function (→ page 217)
3. MAX Defrosts the windshield
4. A/C Activates/deactivates the A/C function (→ page 216)
5. REAR Switches the rear window defroster on/off
6. ▼ Reduces the temperature
7. Depending on vehicle equipment and settings: temperature display, defrost function display, display for pre-entry climate control or auxiliary heating
8. Switches air-recirculation mode on/off (→ page 218)
9. MENU Calls up the air conditioning menu (→ page 215)
10. AUTO Sets climate control to automatic mode (→ page 216)
11. Increases the airflow or switches on climate control (→ page 214)
12. Reduces the airflow or switches off climate control(→ page 214)

ⓘ The availability of individual functions depends on the country and equipment.

Overview of THERMOTRONIC climate bar

The indicator lamps indicate that the corresponding function is activated.

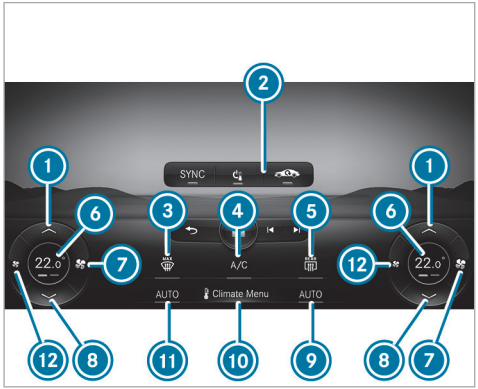

Front climate bar on the central display (example)

1. ▲ Increases the temperature
2. SYNC Synchronization function (→ page 217)
   Switches off climate control (→ page 214)
   Switches air-recirculation mode on/off (→ page 218)
3. MAX Defrosts the windshield
4. A/C Activates/deactivates the A/C function (→ page 216)
   Activates/deactivates residual heat utilization (→ page 218)
5. REAR Switches the rear window defroster on/off
6. Depending on vehicle equipment and settings:
   Temperature display
   MAX Display for the defrost function
   Airflow
   Pre-entry climate control or auxiliary heating
7. Increases the airflow or switches on climate control (→ page 214)
8. ▼ Reduces the temperature
9. AUTO Sets climate control to automatic mode, right (→ page 216)
10. MENU Calls up the air conditioning menu (→ page 215)
11. AUTO Sets climate control to automatic mode, left (→ page 216)
12. Reduces the airflow or switches off climate control(→ page 214)

ⓘ The climate bar is visible even when the vehicle is parked or the air conditioning is switched off (→ page 214).

ⓘ The availability of individual functions is country- and equipment-dependent.

Overview of the rear operating unit

The rear operating unit is available only for vehicles with the THERMOTRONIC air conditioning control panel.

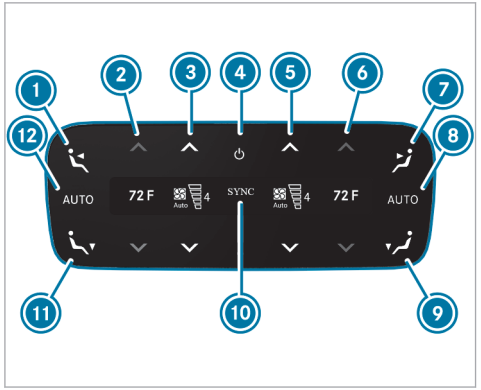

Example: USA

1. Sets the air distribution to the center air vents in the rear passenger compartment, left
2. Sets the temperature in the rear passenger compartment, left
3. Sets the airflow in the rear passenger compartment, left, or switches climate control on/off (→ page 215)
4. Switches climate control on/off (→ page 215)
5. Sets the airflow in the rear passenger compartment, right, or switches climate control on/off (→ page 215)
6. Sets the temperature in the rear passenger compartment, right
7. Sets the air distribution to the center air vents in the rear passenger compartment, right
8. Sets rear passenger compartment climate control to automatic mode, right (→ page 216)
9. Sets the air distribution to the footwell vents in the rear passenger compartment, right
10. Synchronization is activated (→ page 217)
11. Sets the air distribution to the footwell vents in the rear passenger compartment, left
12. Sets rear passenger compartment climate control to automatic mode, left (→ page 216)

The settings for the second row of seats can be configured via the rear operating unit or the multimedia system (→ page 217) depending on the vehicle's equipment.

Operating the climate control system

Switching climate control on/off

Switching on climate control

▶ Set the airflow to level 1 or higher via [ ] on the climate bar on the central display

or

▶ Press [AUTO], [▲], [▼] or [MENU].

Switching off climate control

▶ Set the airflow to level 0 via [ ] on the climate bar on the central display

or

▶ Press [ ].

If climate control is switched off, the windows may fog up more quickly. Switch climate control off only briefly.

ⓘ If you switch off climate control by pressing [ ], fragrancing, if enabled, will also be switched off automatically.

Switching climate control on/off via the rear operating unit

Switching on

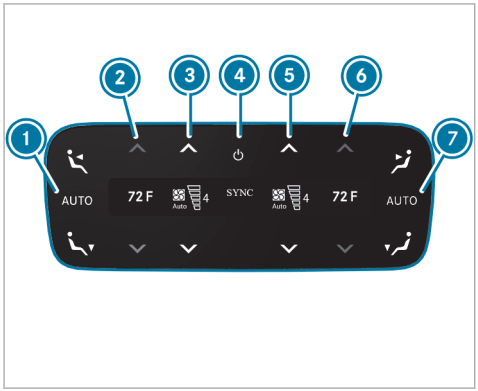

Example: USA

▶ Press button ④.

or

▶ Set the airflow to level 1 or higher using buttons ③ and ⑤.

or

▶ Press buttons ②, ⑥, ⑧ or ⑫.

Switching off

▶ Press button ④.

or

▶ Set the airflow to level 0 using buttons ③ and ⑤.

ⓘ If rear climate control is switched off via button ④, **OFF** will be shown on the displays.

Switching the A/C function on/off using the air conditioning control panel

The A/C function heats, cools and dehumidifies the vehicle's interior air.

▶ Press the A/C button.

ⓘ Switch off the A/C function only briefly, otherwise the windows may fog up more quickly.

Condensation may drip from the underside of the vehicle when cooling mode is active. This is not indicative of a malfunction.

Calling up the air conditioning menu via the climate bar or the air conditioning control panel

The air conditioning menu can be called up via the climate bar. The climate bar is always shown on the lower edge of the central display.

▶ Select the Climate Menu entry in the air conditioning bar.
The First Row of Seats menu is opened.

Defrosting the windshield via the climate bar

Switching on

▶ Press MAX on the climate bar on the central display.

Switching off

▶ Press MAX, AUTO or ⏻ on the climate bar on the central display.

or

▶ Set the airflow to 0.

ⓘ When the defrost function is activated, some functions (e.g. the temperature setting) will automatically be deactivated.

Activating/deactivating the A/C function via the air conditioning menu

Multimedia system:

→ Climate Menu ▸▸ First Row of Seats

Depending on the external conditions, support for improved cooling and dehumidification of the interior air will be provided when the A/C function is activated. If it is not possible to operate the A/C function on the climate bar on the central display, switch the function on or off in the climate menu of the central display.

▶ Select A/C (A/C).

Switch off the A/C function only briefly; otherwise, the windows may fog up more quickly.

Condensation may drip from the underside of the vehicle when cooling mode is active. This is not indicative of a malfunction.

Setting climate control to automatic mode

In automatic mode, the set vehicle interior temperature is controlled automatically and maintained at a constant level by the air supply.

▶ Press AUTO on the climate bar on the central display.

ⓘ You can increase or reduce the airflow by pressing [ ] on the climate bar on the multimedia system. The airflow will automatically be reduced in the event of an incoming call. You will still be able to adjust the airflow manually by pressing [ ]. In automatic mode, five levels can be set via the controller and seven levels can be set without automatic mode.

▶ **To switch to manual operation:** switch off automatic mode or adjust the air distribution, e.g. [ ].

Setting climate control to automatic mode via the rear operating unit

In automatic mode, the temperature is automatically regulated by the temperature of the dispensed air and the airflow.

Example: USA

▶ Press button ① [AUTO].

Overview of the air distribution settings

The symbols on the central display indicate the vents through which the airflow is being directed:

- Defroster vents
- Center air vents
- Footwell vents

Setting air distribution via the air conditioning menu

Multimedia system:

→ Climate Menu

- Select First Row of Seats or Second Row of Seats.
- To set air distribution: select , , or .
- Set the airflow.

ⓘ When the air conditioning system is switched on, at least one zone is always active. However, several air distribution options can be selected at the same time, for example to set the climate control for the vehicle interior and the footwells simultaneously. The climate control for the windshield can only be selected for the first seat row. When automatic mode is active, the buttons for setting the air distribution are deactivated automatically. If the air conditioning system is deactivated, the buttons remain operable and the last setting is saved.

Setting rear climate control using the air conditioning menu

Multimedia system:

→ Climate Menu

Setting the temperature

- Select Second Row of Seats.
- Set the temperature.

Setting the airflow

- Select Second Row of Seats.
- Set the air flow with ▲ or ▼.

Controlling the rear climate control automatically

- Select AUTO.

ⓘ When the defrost function is activated, some functions (e.g. the temperature setting) will automatically be deactivated. To deactivate the defrost function, press either MAX, AUTO or set the air flow to level 0 (→ page 215).

Switching the synchronization function on/off via the air conditioning menu

Multimedia system:

→ Climate Menu ▸▸ First Row of Seats

The synchronization function controls the climate control centrally. The driver's settings for temperature, airflow and air distribution are automatically adopted for each climate zone.

- Select SYNC (SYNC).

Defrosting the windows

Windows fogged up on the inside

▶ Press AUTO on the climate bar on the central display.

▶ If the windows remain fogged up: press MAX on the climate bar on the central display.

Windows fogged up on the outside

▶ Switch on the windshield wiper.

Switching air-recirculation mode on/off via the air conditioning menu

Requirements

- The THERMOTRONIC air conditioning control panel is available.

Multimedia system:

→ Climate Menu ▸▸ First Row of Seats

▶ Press in the upper display area of the climate bar.

The interior air will be recirculated.

Air-recirculation mode will automatically switch to fresh air mode after a while.

ⓘ If air-recirculation mode is switched on, the windows may fog up more quickly. Switch on air-recirculation mode only briefly.

Switching air-recirculation mode on/off

▶ Press on the climate bar on the central display.
The interior air will be recirculated.

Air-recirculation mode will automatically switch to fresh air mode after a while.

ⓘ If air-recirculation mode is switched on, the windows may fog up more quickly. Switch on air-recirculation mode only briefly.

Switching residual heat mode on/off via the climate bar

Requirements

- The residual heat function is available.
- The vehicle is parked.
- The coolant temperature is sufficiently high.

It is possible to make use of the residual heat from the engine to continue heating the front compartment of the vehicle for approximately 30 minutes, depending on the temperature set.

▶ **To switch on or off:** select Residual Heat on the climate bar of the central display.

The residual heat function will automatically switch off after a while.

ⓘ If residual engine heat utilization is activated, the two buttons for setting the temperature and air distribution will automatically be deactivated.

Activating/deactivating ionization

Multimedia system:

→ Climate Menu ▸▸ Air Quality

When ionization is activated, the air inside the vehicle is enriched with negatively charged oxygen ions. These can promote the well-being of the occupants.

▶ Select Ionization.

ⓘ The function can only be performed if AUTO mode is activated or the air distribution is set to the side air vent. The function is restricted if the side air vents on the driver's side are closed.

Fragrance system

Activating/deactivating the fragrance system using the multimedia system

Requirements

- Automatic climate control is activated.
- The glove compartment will close.
- A flacon is inserted.

Multimedia system:

Climate Menu ▸▸ Air Quality

The fragrance system distributes a pleasant fragrance throughout the vehicle interior from a flacon located in the glove compartment.

▶ Navigate down until the climate control bar is active.

▶ Select Fragrance.

▶ Activate or deactivate fragrancing.

Setting the fragrance system

Requirements

- The climate control system is switched on.
- The glove compartment is closed.
- A flacon is inserted.

Multimedia system:

Climate Menu ▸▸ Air Quality

The fragrance system distributes a pleasant fragrance throughout the vehicle interior from a flacon located in the glove compartment.

▶ Select Fragrance.

▶ Keep pressing until the desired intensity is reached.

Inserting or removing the flacon of the fragrance system

⚠ **WARNING** Risk of injury from liquid perfume

If children open the flacon, they could drink the liquid perfume or it could come into contact with their eyes.

▶ Do not leave children unattended in the vehicle.

▶ Consult a doctor immediately if liquid perfume has been drunk.

▶ If liquid perfume comes into contact with your eyes or skin, rinse your eyes with clean water.

▶ If symptoms continue, consult a doctor.

ENVIRONMENTAL NOTE Environmental damage due to improper disposal of full flacons

Full flacons must not be disposed of together with household waste.

▶ Hand in full flacons at a pollutant collection point.

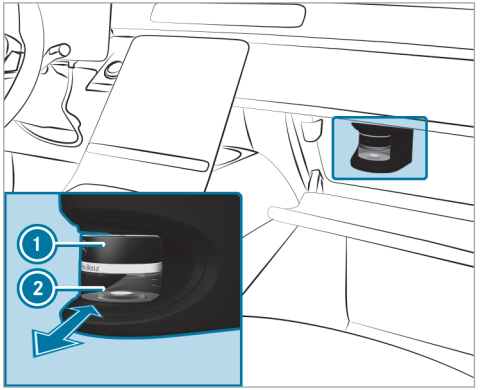

1 Cap
2 Flacon

▶ **To insert:** slide the flacon into the holder as far as it will go.

▶ **To remove:** after opening the glove compartment, wait for approximately seven seconds and pull out the flacon.

If you do not use genuine Mercedes-Benz interior perfumes, observe the manufacturers' safety notices on the perfume packaging.

Dispose of the genuine Mercedes-Benz interior perfume flacon when it is empty and do not refill it.

Refillable flacon

▶ Unscrew the cap of the empty flacon.

▶ Fill the flacon with a maximum of 0.5 fl. oz. (15 ml).

▶ Screw the cap back onto the flacon.

Always refill the empty refillable flacon with the same perfume. Observe the separate information sheet that comes with the flacon.

Information on the windshield heater

The windshield heater is switched on automatically if the MAX button is activated.

After the vehicle is started, the windshield heater will be switched on automatically as required.

Pre-entry climate control when the vehicle is unlocked

Function of pre-entry climate control when the vehicle is unlocked

The seats can be briefly preheated or precooled before you get into the vehicle.

Depending on the vehicle's equipment, the following functions will be activated as needed during precooling:

- Automatic climate control
- Blower
- Seat ventilation

Depending on the vehicle's equipment, the following functions will be activated as needed during preheating:

- Automatic climate control
- Blower
- Seat heating
- Steering wheel heater
- Mirror heater
- Rear window defroster

Depending on the vehicle's equipment, the following functions will also be adjusted during pre-entry climate control if they have already been switched on during regular vehicle operation:

- Fragrancing
- Ionization

Setting pre-entry climate control when the vehicle is unlocked in the multimedia system

Multimedia system:

Climate Menu ▸▸ Pre-entry Climate Ctrl.

ⓘ This function is available only for plug-in hybrid vehicles.

▶ Activate or deactivate the function.

Selecting seats

▶ Select Driver, Passenger, Rear Left or Rear Right.
The seat-specific functions of pre-entry climate control (e.g. seat heating) will be performed for the selected seats.

When pre-entry climate control is enabled, an LED on the climate bar on the central display will light up blue for a cooled vehicle and red for a heated vehicle.

Activating/deactivating pre-entry climate control when the vehicle is unlocked

Requirements

- The high-voltage battery is charged sufficiently.
- The function has been activated via the multimedia system.

▶ **To switch on:** unlock the vehicle.
The climate control functions are activated for up to five minutes for pre-heating and pre-cooling.

Pre-entry climate control when the vehicle is unlocked cannot be activated more than twice when the vehicle is switched off.

▶ **To switch off:** press [ ] on the climate bar on the central display.

Depending on the vehicle equipment, the following functions will remain active once the vehicle has been started:

- Seat heating
- Seat ventilation
- Fragrancing
- ionization

Pre-entry climate control for departure time

Pre-entry climate control for departure time function

WARNING Risk of fatal injury due to exposure to extreme heat or cold in the vehicle

If persons, particularly children, are subjected to prolonged exposure to intense heat or cold, there is a risk of severe injury or even death.

▶ Never leave persons, particularly children, unattended in the vehicle.

WARNING Risk of burns due to repeatedly switching on the seat heating

Repeatedly switching on the seat heating can cause the seat cushion and seat backrest padding to become very hot.

In particular, the health of persons with limited temperature sensitivity or a limited ability to react to high temperatures may be affected or they may even suffer burn-like injuries.

▶ Do not repeatedly switch on the seat heating.

To protect against overheating, the seat heating may be temporarily deactivated after it has been switched on repeatedly.

ⓘ The pre-entry climate control for departure time function is available only for vehicles with 48 V on-board electrical systems.

The air inside the vehicle can be heated, ventilated or cooled to the set temperature when the vehicle is parked.

The running time of pre-entry climate control may be reduced in the following circumstances (vehicles with a 48 V on-board electrical system):

- The 48 V battery is not fully charged.

The running time of pre-entry climate control may be reduced in the following circumstances (plug-in hybrid):

- The vehicle is not connected to power supply equipment.
- The high-voltage battery is not fully charged

With active pre-entry climate control, the state of charge of the high-voltage battery may be reduced, even if the charging cable connector is connected.

If available, seat ventilation will be activated in the cooling and ventilation modes.

Depending on the vehicle's equipment, the following functions will be activated in heating mode, if available:

- Seat heating
- Steering wheel heater

- Mirror heater
- Rear window defroster

When the set temperature changes, climate control mode will automatically switch:

- From heating mode to ventilation or cooling mode, or
- from cooling mode to ventilation or heating mode, or
- from ventilation mode to heating or cooling mode

Setting pre-entry climate control at departure time via the multimedia system

Multimedia system:

→ Climate Menu ▸▸ Pre-entry Climate Ctrl.

Setting the departure time

ⓘ Plug-in hybrid: the set departure times are used for the vehicle's pre-entry climate control and for predictions regarding the approximate state of charge and range at the time selected. Additional information on the charging settings: (→ page 457).

▶ Select Edit Departure Time ✎ .

▶ Select a departure time or set a new departure time.

Setting the repeat days

▶ Select Edit Departure Time ✎ .

▶ Set the desired departure time and select the corresponding weekdays on which this departure time is to apply.

▶ Press OK to confirm.

Selecting seats

▶ Select Driver, Passenger, Rear Left or Rear Right.
Pre-entry climate control will take place for the selected seats.

Activating/deactivating pre-entry climate control for departure time

⚠ **WARNING** Risk of fatal injury due to exposure to extreme heat or cold in the vehicle

If persons, particularly children, are subjected to prolonged exposure to intense heat or cold, there is a risk of severe injury or even death.

▶ Never leave persons, particularly children, unattended in the vehicle.

⚠ **WARNING** Risk of burns due to repeatedly switching on the seat heating

Repeatedly switching on the seat heating can cause the seat cushion and seat backrest padding to become very hot.

In particular, the health of persons with limited temperature sensitivity or a limited ability to react to high temperatures may be affected or they may even suffer burn-like injuries.

▶ Do not repeatedly switch on the seat heating.

To protect against overheating, the seat heating may be temporarily deactivated after it has been switched on repeatedly.

Requirements
- The 48 V battery or the high-voltage battery is charged sufficiently.
- The function has been activated via the multimedia system.

▶ **To activate:** set the departure time (→ page 223).
Vehicles with 48 V on-board electrical system: Pre-entry climate control for departure time will switch on a maximum of 5 minutes before the selected departure time.

Plug-in hybrid: Pre-entry climate control for departure time will switch on a maximum of 55 minutes before the selected departure time. It will remain active for another five minutes if departure is delayed.

▶ **To deactivate the pre-entry climate control for departure time early:** press [ ] on the climate bar on the central display or switch off the preselection of the time in the climate menu.

If present, the following functions will remain active once the vehicle has been started:
- Seat heating
- Seat ventilation

Depending on the vehicle's equipment, the following functions will also be adjusted during pre-entry climate control if they have already been switched on during regular vehicle operation:
- Fragrancing
- Ionization

Activating/deactivating immediate pre-entry climate control

⚠ **WARNING** Risk of fatal injury due to exposure to extreme heat or cold in the vehicle

If persons, particularly children, are subjected to prolonged exposure to intense heat or cold, there is a risk of severe injury or even death.

▶ Never leave persons, particularly children, unattended in the vehicle.

⚠ **WARNING** Risk of burns due to repeatedly switching on the seat heating

Repeatedly switching on the seat heating can cause the seat cushion and seat backrest padding to become very hot.

In particular, the health of persons with limited temperature sensitivity or a limited ability to react to high temperatures may be affected or they may even suffer burn-like injuries.

▶ Do not repeatedly switch on the seat heating.

To protect against overheating, the seat heating may be temporarily deactivated after it has been switched on repeatedly.

Requirements
- The vehicle is switched off.

Air conditioning of the vehicle interior can continue, e.g. if a journey is interrupted, for up to 50 minutes in the case of plug-in hybrids and up to 5

minutes in the case of some models with a 48 V on-board electrical system.

▶ Press [ ] on the climate bar on the central display.
The red or blue indicator lamp below [ ] on the climate bar on the central display will light up or go out.

▶ Set the temperature using the arrows [▼▲] on the climate bar on the central display.

The colors of the indicator lamp have the following meanings:

- **Blue:** stationary ventilation is switched on.
- **Red:** the stationary heater is switched on.
- **Yellow:** the departure time is preselected.

Air vents

Adjusting the front air vents

⚠ **WARNING** Risk of burns or frostbite due to being too close to the air vents

Very hot or very cold air can flow from the air vents.

▶ Make sure that all vehicle occupants always maintain a sufficient distance from the air vents.

▶ If necessary, direct the airflow to another area of the vehicle interior.

To guarantee the flow of fresh air through the air vents into the vehicle interior, note the following:

- Always keep the vents and ventilation grilles in the vehicle interior clear.
- Keep the air inlet free of residue build-up (→ page 565).

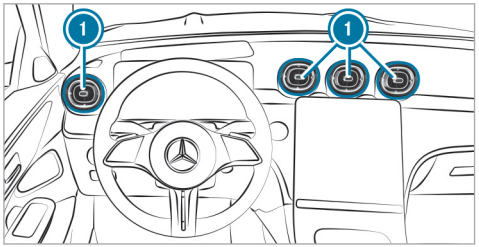

▶ **To open or close:** hold the center of air vent ① and turn it to the left (open) or right (closed) as far as it will go.

▶ **To set the airflow direction:** hold the center of air vent ① and move it up or down or to the left or right.

Adjusting the rear air vents

⚠ **WARNING** Risk of burns or frostbite due to being too close to the air vents

Very hot or very cold air can flow from the air vents.

▶ Make sure that all vehicle occupants always maintain a sufficient distance from the air vents.

▶ If necessary, direct the airflow to another area of the vehicle interior.

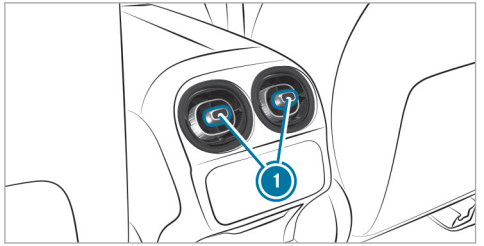

- **To open or close:** turn controller (1) to the left or right as far as it will go.
- **To set the airflow direction:** hold the center of controller (1) and move it up or down or to the left or right.

Driving

Notes on plug-in hybrids

Notes on plug-in hybrid operation

WARNING Risk of chemical burns and poisoning from damaged high-voltage battery

If the housing of the high-voltage battery has been damaged, electrolyte and gases may leak out.

- ▶ Avoid contact with the skin, eyes or clothing.
- ▶ Immediately rinse electrolyte splashes off with water and seek medical attention straight away.

DANGER Risk of fire and explosion from excessive internal pressure of the high-voltage battery

In the event of a vehicle fire, flammable gas can escape and ignite.

- ▶ If there is an unusual smell, smoke or burn marks, stop the charging process immediately.
- ▶ Leave the danger zone immediately. Secure the danger area at a sufficient distance.
- ▶ Call the fire service.

The hybrid system combines a combustion engine with an electric motor.

Characteristics when the vehicle is at a standstill:

- The combustion engine is generally switched off.
- Idle speed occurs only in certain instances.

Characteristics when the vehicle is started:

- If the high-voltage battery is sufficiently charged, the vehicle can be started with the electric drive system without the combustion engine (noiseless start).
- If the high-voltage battery for the electric drive system is not sufficiently charged or the vehicle conditions for a silent start are not met, the vehicle will start with the combustion engine.

ⓘ Depending on the system, it may be that even though the high-voltage battery is charged, electric mode has restricted or no availability. When the combustion engine has run for long enough and the ambient conditions permit, electric mode will be available without restriction once more.

Characteristics with moderate power output requests:

- The combustion engine is switched off as often as possible during a journey.
- Depending on the drive program selected and the state of charge of the high-voltage battery, the vehicle can be accelerated electrically up to a speed of approximately 87 mph (140 km/h).

Characteristics with high power output requests:

- The electric motor supports the combustion engine (boost effect), e.g. when pulling away or accelerating.
- The high-voltage battery is discharging.

Characteristics when the accelerator pedal is released during the journey:

- The electric motor is operated as an alternator when in overrun mode and during braking.
- The high-voltage battery is charging.

Notes on electric mode:

- Vehicles with hybrid systems generate significantly less noise when stationary and when being driven than vehicles with combustion engines.
- In electric mode, the vehicle may not be heard by other road users due to the significantly reduced noise generated when the vehicle is in motion and when at a standstill.

  It is for this reason that the vehicle is equipped with a sound generator, which serves as an acoustic vehicle alerting system (AVAS). This safety system is prescribed by law.

  The external noise produced by the sound generator is perceptible in the vehicle interior when the vehicle is stationary and at low speeds and does not represent a malfunction.
- If not all of the vehicle conditions for electric mode are met, the combustion engine will be switched on.
- Performance restrictions in electric mode are possible as a result of the operating temperature of the high-voltage battery and drive system, the ambient temperature and aging of the high-voltage battery.
- In electric mode, the maximum power will not be permanently available and may drop to continuous output.

Notes on the acoustic vehicle alerting system:

- The sound generator produces idling and speed-dependent driving noises up to a speed of approximately 19 mph (30 km/h).
- This will help other road users, particularly pedestrians and cyclists, to hear your vehicle better.
- From a speed of 13 mph (20 km/h), the acoustic vehicle alerting system gradually switches off.

ⓘ **Mercedes-AMG vehicles:** the sound generator of the acoustic vehicle alerting system also produces stationary noise.

Manually disconnecting the high-voltage on-board electrical system

⚠ **DANGER** Risk of death and fire due to modified and/or damaged components of the high-voltage on-board electrical system

The vehicle's high-voltage on-board electrical system is under high voltage. If you modify component parts in the vehicle's high-voltage on-board electrical system or touch damaged component parts, you may be electrocuted. In addition, modified and/or damaged components may cause a fire.

In the event of an accident or impact to the underbody, components of the high-voltage electrical system may be damaged although the damage is not visible.

▶ Never make any modifications to the high-voltage on-board electrical system.

- ▶ Do not switch on or use the vehicle if its high-voltage on-board electrical system components have been modified or damaged.
- ▶ Never touch damaged components of the high-voltage on-board electrical system.
- ▶ After an accident, do not touch any components of the high-voltage on-board electrical system.
- ▶ After an accident, have the vehicle transported away.
- ▶ Have the components of the high-voltage on-board electrical system checked at a qualified specialist workshop and replaced if necessary.

Requirements

Only disconnect the high-voltage on-board electrical system manually in the following situations:

- The restraint system warning lamp [ ] lights up in the driver display, e.g. after an accident.
- The vehicle is badly damaged, e.g. after an accident, and the restraint system components have not been triggered.

Operating the high-voltage disconnect device

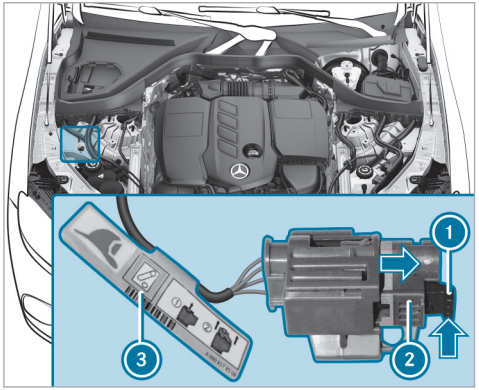

- ▶ Switch off the vehicle.
- ▶ Shift the transmission to position [P].
- ▶ Apply the electric parking brake.
- ▶ Secure the vehicle against rolling away.
- ▶ Open the hood.
- ▶ Observe additional label ③ for high-voltage disconnect device ②.
- ▶ Press release tab ① in the direction of the arrow and pull it out.
- ▶ Pull high-voltage disconnect device ② in the direction of the arrow until it engages.
  The high-voltage on-board electrical system is switched off.

All work on the hybrid drive system–– (including after disconnecting the high-voltage on-board electrical system manually) may only be carried out in a qualified specialist workshop.

Switching on the power supply or the vehicle

WARNING Risk of accident and injury due to children left unattended in the vehicle

If you leave children unattended in the vehicle, they could, in particular:

- open doors, thereby endangering other persons or road users.
- get out and be struck by oncoming traffic.
- operate vehicle equipment and become trapped, for example.

In addition, the children could also set the vehicle in motion by, for example:

- releasing the parking brake.
- changing the gearbox position.
- starting the vehicle.

▶ Never leave children unattended in the vehicle.

▶ When leaving the vehicle, always take the key with you and lock the vehicle.

▶ Keep the key out of reach of children.

Requirements

- The key is in the vehicle and is detected.
- The brake pedal is not depressed.

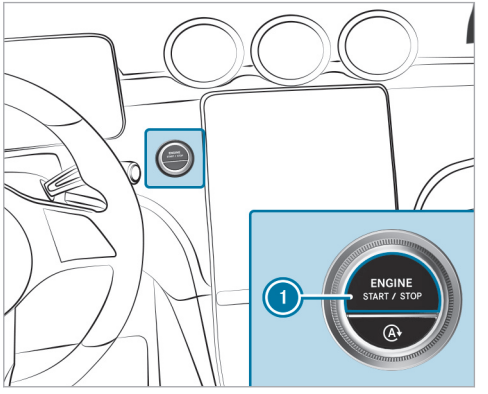

▶ **To switch on the power supply:** press button ① once.
You can, for example, switch on the windshield wiper.

The power supply will be switched off again if the following conditions are met:

- You open the driver's door.
- You press button ① twice more.

▶ **To switch on the vehicle:** press button ① twice.
Indicator and warning lamps will light up on the driver's display.

The vehicle will be switched off again if one of the following conditions is met:

- You do not start the vehicle within 15 minutes and the transmission is in position P or the electric parking brake is applied.
- You press button ① once.

Starting the vehicle

Starting the vehicle with the start/stop button

DANGER Risk of death caused by exhaust gases

Combustion engines emit poisonous exhaust gases such as carbon monoxide. Inhaling these exhaust gases is hazardous to health and leads to poisoning.

▶ Never leave the engine or, if present, the auxiliary heating running in an enclosed space without sufficient ventilation.

WARNING Risk of fire due to flammable materials in the engine compartment or on the exhaust system

Flammable materials may ignite.

▶ Therefore, regularly check that there are no flammable foreign materials in the engine compartment or on the exhaust system.

WARNING Risk of accident and injury due to children left unattended in the vehicle

If you leave children unattended in the vehicle, they could, in particular:

- open doors, thereby endangering other persons or road users.
- get out and be struck by oncoming traffic.
- operate vehicle equipment and become trapped, for example.

In addition, the children could also set the vehicle in motion by, for example:

- releasing the parking brake.
- changing the gearbox position.
- starting the vehicle.

▶ Never leave children unattended in the vehicle.

▶ When leaving the vehicle, always take the key with you and lock the vehicle.

▶ Keep the key out of reach of children.

Requirements

- The key is in the vehicle and is detected.

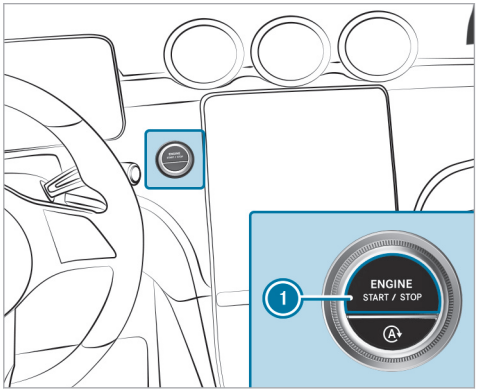

▶ Shift the transmission to position P or N.

▶ depress the brake pedal and press button 1 once.

▶ If the vehicle does not start: switch off non-essential consumer equipment and press button 1 once.

▶ If the vehicle still does not start and the Place the Key in the Marked Space See Operator's Manual display message appears on the driver's display: start the vehicle with the key in the marked space (emergency operation mode) (→ page 232).

ⓘ You can switch off the vehicle while driving. To do this, press and hold button ① for about three seconds or press button ① three times within three seconds. Be sure to observe the safety notes concerning this under "Driving tips" (→ page 237).

Observe any information regarding display messages that may be shown on the driver's display.

Starting the vehicle with the key in the marked space (emergency operation mode)

⚠ DANGER Risk of death caused by exhaust gases

Combustion engines emit poisonous exhaust gases such as carbon monoxide. Inhaling these exhaust gases is hazardous to health and leads to poisoning.

▶ Never leave the engine or, if present, the auxiliary heating running in an enclosed space without sufficient ventilation.

⚠ WARNING Risk of fire due to flammable materials in the engine compartment or on the exhaust system

Flammable materials may ignite.

▶ Therefore, regularly check that there are no flammable foreign materials in the engine compartment or on the exhaust system.

⚠ WARNING Risk of accident and injury due to children left unattended in the vehicle

If you leave children unattended in the vehicle, they could, in particular:

- open doors, thereby endangering other persons or road users.
- get out and be struck by oncoming traffic.
- operate vehicle equipment and become trapped, for example.

In addition, the children could also set the vehicle in motion by, for example:

- releasing the parking brake.
- changing the gearbox position.
- starting the vehicle.

▶ Never leave children unattended in the vehicle.

▶ When leaving the vehicle, always take the key with you and lock the vehicle.

▶ Keep the key out of reach of children.

If the vehicle does not start and the Place the Key in the Marked Space See Operator's Manual display message appears on the driver's display, you can start the vehicle in emergency operation mode.

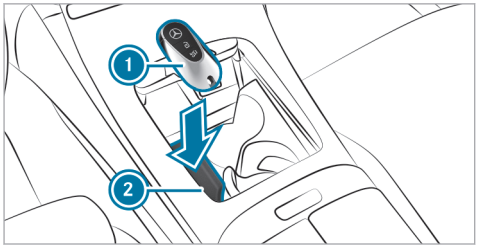

- Make sure that marked space (2) is empty.
- Remove key (1) from the key ring.
- Place key (1) on the symbol in marked space (2).
  The vehicle will start after a short time.
  If you remove key (1) from marked space (2), the vehicle can still be driven. For further engine starts, however, key (1) must be located on the symbol in marked space (2) during the entire trip.
- Have key (1) checked at a qualified specialist workshop.

If the vehicle does not start:

- Place key (1) in marked space (2) and leave it there.
- Depress the brake pedal and start the vehicle using the start/stop button.

ⓘ You can switch on the power supply or the vehicle with the start/stop button.

Observe any information regarding display messages that may be shown on the driver's display.

Starting the vehicle via Remote Online Services

Cooling or heating the vehicle interior before starting the journey

Ensure the following before starting the engine:

- The legal stipulations in the area where your vehicle is parked allow engine starting via smartphone.
- It is safe to start and run the engine where your vehicle is parked.
- The fuel tank is sufficiently full.
- The starter battery is sufficiently charged.

Charging the starter battery before starting the journey

You can receive a message on your smartphone when the state of charge of the starter battery is low. You can then start the vehicle with the smartphone to charge the battery. The vehicle is automatically switched off after ten minutes.

Ensure the following before starting the engine:

- The legal stipulations in the area where your vehicle is parked allow engine starting via smartphone.
- It is safe to start and run the engine where your vehicle is parked.
- The fuel tank is sufficiently full.

Starting the vehicle (Remote Online)

⚠ **DANGER** Risk of death caused by exhaust gases

Combustion engines emit poisonous exhaust gases such as carbon monoxide. Inhaling these exhaust gases is hazardous to health and leads to poisoning.

▶ Never leave the engine or, if present, the auxiliary heating running in an enclosed space without sufficient ventilation.

⚠ **WARNING** Risk of fire due to flammable materials in the engine compartment or on the exhaust system

Flammable materials may ignite.

▶ Therefore, regularly check that there are no flammable foreign materials in the engine compartment or on the exhaust system.

⚠ **WARNING** Risk of crushing or entrapment due to unintentional starting of the engine

Limbs could be crushed or trapped if the engine is started unintentionally during service or maintenance work.

▶ Always secure the engine against unintentional starting before carrying out maintenance or repair work.

⚠ **WARNING** Risk of accident and injury due to children left unattended in the vehicle

If you leave children unattended in the vehicle, they could, in particular:

- open doors, thereby endangering other persons or road users.
- get out and be struck by oncoming traffic.
- operate vehicle equipment and become trapped, for example.

In addition, the children could also set the vehicle in motion by, for example:

- releasing the parking brake.
- changing the gearbox position.
- starting the vehicle.

▶ Never leave children unattended in the vehicle.

▶ When leaving the vehicle, always take the key with you and lock the vehicle.

▶ Keep the key out of reach of children.

Requirements

- Park position P is selected.
- The anti-theft alarm system is not activated.
- The panic alarm is not activated.
- The hazard warning lights are off.
- The hood is closed.
- The doors are closed and locked.
- The windows and sliding sunroof are closed.

▶ Start the vehicle using the smartphone. After every vehicle start, the engine runs for ten minutes.

You can carry out a maximum of two consecutive starting attempts. You must start the vehicle once with the key before starting the vehicle again with the smartphone.

You can turn off the vehicle at any time as follows:

- via the Mercedes me App
- by pushing the button [ ] or [ ] on the key

ⓘ Further information can be found in the Mercedes me App.

Securing the engine against starting before carrying out maintenance or repair work:

- ▶ Turn on the hazard warning lights or unlock the doors.
- ▶ Open a side window or the sliding sunroof.

Breaking-in notes

To preserve the engine during the first 1000 miles (1500 km):

- Drive at varying road speeds and engine speeds.
- Do not drive faster than 85 mph (140 km/h).
- Drive the vehicle in drive program [C] or [E].

  Plug-in hybrid: use drive program [EL], [H] or [B].
- Then shift to the next higher gear at the very latest when the needle reaches the last third before the red area in the tachometer.
- Do not shift down manually in order to brake.
- Avoid overstraining the vehicle, e.g. by driving at full throttle.
- Do not depress the accelerator pedal past the pressure point (kickdown).
- Increase the engine speed only gradually and accelerate the vehicle to full speed after 1000 miles (1500 km).

This also applies when the engine or parts of the drivetrain have been replaced.

Please also observe the following breaking-in notes:

- In certain handling and driving safety systems, the sensors adjust automatically while a certain distance is being driven after the vehicle has been delivered or after repairs. Full system effectiveness is reached only when this teaching-in process has concluded.
- Brake pads, brake discs and tires that are either new or have been replaced achieve optimum braking effect and grip only after the vehicle has been driven several hundred kilometers. Compensate for the reduced braking effect by applying greater force to the brake pedal.

Notes on engine output and engine torque (Mercedes-AMG vehicles)

ⓘ The actual (maximum) values that can be achieved for engine output and engine torque may deviate from the certified values within the country-specific provisions for permissible tolerances (basis: UN-ECE No. 85 or country-specific provisions).

Influencing variables that can influence this are, for example:

- Location above sea level
- Fuel grade
- Outside temperature
- Operating temperature of the engine

Until the engine has reached its operating temperature, the [engine operating temperature warning lamp] is lit.

Engine output and engine torque have been reduced. Take this into account in your driving style.

When the engine operating temperature warning lamp [ ] goes out, full engine output and full engine torque are available.

Notes on optimized acceleration

If all necessary requirements and activation conditions are fulfilled, the best possible acceleration can be achieved from a standstill.

Do not use optimized acceleration on public roads. Individual wheels could spin and you could lose control of the vehicle. There is an increased risk of skidding and/or accident.

Be sure to observe the safety notes and information on ESP® (→ page 306).

Pulling away with optimized acceleration

WARNING Risk of skidding and accidents due to the wheels spinning

If you pull away using optimized acceleration, individual wheels can spin and the vehicle can skid.

There is an increased risk of skidding and accidents, especially when ESP® is switched off!

- Make sure that there are no persons or obstacles in the vicinity of the vehicle.

Requirements

- the vehicle is broken in (→ page 235).
- the vehicle and tires are in good condition.
- the roadway has a high-grip surface.
- the engine and transmission are at normal operating temperature.

NOTE Increased wear due to optimized acceleration

When pulling away with optimized acceleration, all components of the drivetrain are subjected to a very high load.

This can lead to increased component wear.

- Do not always pull away with optimized acceleration.

- Engage the [D] drive position (→ page 266).
- Move the steering wheel to the straight-ahead position.
- Select the drive program [S] (→ page 257, 258).
- Deactivating ESP® (→ page 310).
- Depress and hold the brake pedal firmly with your left foot.
- With your right foot, fully depress the accelerator pedal.
- After no more than five seconds, take your left foot quickly off the brake, but keep the accelerator pedal depressed.
  The vehicle will pull away at maximum acceleration.
- Switch on ESP® once the acceleration procedure is complete.

Ending optimized acceleration

- Remove your foot from the accelerator pedal.
- Reactivate ESP®.

ⓘ After you pull away with optimized acceleration, components of the drivetrain can become very hot, which means that optimized acceleration values may only be reached again after a few minutes.

Notes on driving

⚠ WARNING Risk of accident due to objects in the driver's footwell

Objects in the driver's footwell may impede pedal travel or block a depressed pedal.

This will jeopardize the operating- and road safety of the vehicle.

- ▶ Stow all objects in the vehicle securely so that they cannot get into the driver's footwell.
- ▶ Make sure that there is always sufficient clearance for the pedals.
- ▶ Always install the floor mats securely and as prescribed.
- ▶ Do not use loose floor mats and do not place floor mats on top of one another.

⚠ WARNING Risk of accident due to incorrect footwear

Incorrect footwear includes, for example:

- Shoes with platform soles
- Shoes with high heels
- Slippers

There is a risk of an accident.

- ▶ Always wear suitable footwear so that you can operate the pedals safely.

⚠ WARNING Risk of accident if the vehicle is switched off while driving

If you switch off the vehicle while driving, safety functions are restricted or no longer available.

This may affect the power steering system and the brake force boosting, for example.

You will need to use considerably more force to steer and brake, for example.

- ▶ Do not switch off the vehicle while driving.

⚠ DANGER Risk of death caused by exhaust gases

Combustion engines emit poisonous exhaust gases such as carbon monoxide. Inhaling these exhaust gases is hazardous to health and leads to poisoning.

- ▶ Never leave the engine or, if present, the auxiliary heating running in an enclosed space without sufficient ventilation.

⚠ WARNING Risk of skidding and of an accident due to shifting down on slippery road surfaces

If you shift down on slippery road surfaces to increase the engine braking effect, the drive wheels may lose traction.

- ▶ Do not shift down on slippery road surfaces to increase the engine braking effect.

DANGER Risk of fatal injury due to poisonous exhaust gases

If the tailpipe is blocked or sufficient ventilation is not possible, poisonous exhaust gases such as carbon monoxide may enter the vehicle. This is the case, for example, if the vehicle gets stuck in the snow.

- Keep the tailpipe and the area around the vehicle free from snow when the engine or the stationary heater is running.
- Open a window on the side of the vehicle facing away from the wind to ensure an adequate supply of fresh air.

WARNING Risk of accident and injury due to being under the influence of alcohol and drugs while driving

Drinking and driving and/or taking drugs and driving are very dangerous combinations. Even a small amount of alcohol or drugs can affect your reflexes, perceptions and judgment.

The possibility of a serious or even fatal accident are greatly increased when you drink or take drugs and drive.

- Do not drink or take drugs and drive or allow anyone to drive who has been drinking or taking drugs.

WARNING Risk of accident due to the brake system overheating

If you leave your foot on the brake pedal when driving, the brake system may overheat.

This increases the braking distance and the brake system can even fail.

- Never use the brake pedal as a footrest.
- Do not depress the brake pedal and the accelerator pedal at the same time while driving.

NOTE Engine damage due to excessively high engine speeds

The engine will be damaged if you drive with the engine in the overrevving range.

- Do not drive with the engine in the overrevving range.

NOTE Wearing out the brake linings by continuously depressing the brake pedal

- Do not depress the brake pedal continuously whilst driving.
- To use the braking effect of the engine, shift to a lower gear in good time.

NOTE Damage to the drivetrain and engine when pulling away

- Do not warm up the engine while the vehicle is stationary. Pull away immediately.
- Avoid high engine speeds and driving at full throttle until the engine has reached its operating temperature.

NOTE Damage to the catalytic converter due to non-combusted fuel

The engine is not running smoothly and is misfiring.

Non-combusted fuel may get into the catalytic converter.

- Only depress the accelerator pedal slightly.
- Have the cause rectified immediately at a qualified specialist workshop.

NOTE Reduced battery life due to frequent short-distance trips

The 12 V battery may not be sufficiently charged when the vehicle is used only for short-distance trips. This reduces the life of the battery.

- Drive longer distances regularly to charge the battery.

NOTE Vehicle damage due to failure to observe the maximum permissible clearance height

If the vehicle height exceeds the maximum permissible clearance height, the roof and other vehicle parts may be damaged.

- Please observe the maximum clearance height indicated.
- If the vehicle exceeds the permissible clearance height, do not drive in.
- Take the modified vehicle height into account in the case of roof superstructures or other carrier systems.

ⓘ Please bear in mind that all the speed values stated in this Operator's Manual are approximate and are subject to a certain tolerance.

Observe the notes on driving with a roof load, trailer or fully laden vehicle.

Driving with a loaded roof luggage rack or trailer, or with the vehicle fully loaded or occupied, changes the handling and steering characteristics of your vehicle.

Therefore please observe the following notes:

- Do not exceed the permissible roof load and trailer load. Also observe the information in the technical data in this respect.
- Distribute the roof load and vehicle load evenly and place heavy objects at the bottom. Also comply with the notes on loading the vehicle.(→ page 170)
- Drive carefully, avoiding abrupt starting, braking and steering as well as fast cornering.

Notes on driving on roads treated with de-icing salt

The braking effect is limited on road surfaces treated with de-icing salt.

Please therefore bear in mind the following notes:

- Due to salt build-up on the brake discs and brake linings, the braking distance can increase considerably or braking may be one-sided.
- Maintain a much greater safety distance to the vehicle traveling ahead.

Remove salt build-up as follows:

- Brake occasionally, paying attention to the traffic conditions
- Carefully depress the brake pedal at the end of the journey and when starting the next journey

Notes on hydroplaning

Hydroplaning can take place if a certain depth of water has built up on the road surface.

Observe the following notes during heavy precipitation or in conditions in which hydroplaning may occur:

- Reduce speed.
- Avoid tire ruts.
- Avoid sudden steering movements.
- Brake carefully.

ⓘ Also observe the notes on regularly checking wheels and tires (→ page 31).

Notes on driving through water on the road

Water ingress can damage the engine, electrics and transmission.

Water can also enter the air intake of the engine and cause engine damage.

Observe the following if you need to drive through water:

- Observe the maximum permissible fording depth (→ page 770, 769).
- Drive at a walking pace at most, otherwise water may enter the vehicle interior or engine compartment.
- Vehicles traveling ahead, or oncoming vehicles, can create waves that may exceed the maximum permissible depth of water.

The braking effect of the brakes is reduced after fording. Brake carefully, paying attention to the traffic conditions, until braking power has been fully restored.

Function of rear axle steering

The rear axle steering is an electromechanical auxiliary steering on the rear axle which adjusts the steering of the rear wheels according to the position of the front wheels, depending on the speed. This results in greater maneuverability and improved driving stability for the vehicle.

Rear axle steering has the following characteristics:

- reduced steering effort and turning circle resulting in reduced parking effort
- more direct steering resulting in improved control of the vehicle
- improved cornering of the vehicle

Observe the notes on snow chains and snow chain mode (→ page 601).

Notes on off-road driving

⚠ **WARNING** Risk of accident if you do not keep to line of fall on inclines

If you drive at an angle or turn on an incline, the vehicle could slip sideways, tip and roll-over.

▶ Always drive on inclines in the line of fall (straight up or down) and do not turn.

WARNING Risk of fire caused by flammable material on hot exhaust system components

Flammable material such as leaves, grass or twigs may ignite if they come into contact with hot parts of the exhaust system.

- When driving on an unpaved road or off-road, check the vehicle underside regularly.
- In particular, remove trapped plant parts or other flammable material.
- If there is damage, consult a qualified specialist workshop immediately.

When you drive off road, sand, mud and water or water mixed with oil etc. may get into the brakes. This may lead to a reduction in braking performance or total brake failure as a result of increased wear. The braking characteristics will vary depending on the material that has entered the system. Clean the brakes after driving off road. If you then notice reduced braking performance or hear scraping noises, have the brake system checked at a qualified specialist workshop. Adapt your driving style to the changed braking characteristics.

NOTE Damage caused by driving over obstacles

The vehicle can be damaged by:

- Driving onto high curbs or unpaved roads.
- Quickly driving over obstacles such as curbs, speed bumps or potholes.
- Heavy objects hitting the underbody or chassis components.

- Do not drive over obstacles that could damage the vehicle.
- Check the vehicle regularly for damage during off-road driving.
- Adjust the vehicle speed to suit the road surface conditions.
- If there is damage, consult a qualified specialist workshop immediately.

ENVIRONMENTAL NOTE Environmental damage due to non-observance of prohibition signs

Environmental protection has priority. Treat nature with respect.

- Be sure to observe prohibition signs.

Checklist before driving off road

Check the following points before driving off road:

- Fuel level
- Engine oil level: fill engine oil to the maximum level to ensure full gradeability (→ page 29).
- Tire-change tool kit and spare wheel
- Tires and wheels

ⓘ Further information about special all-terrain tires for retrofitting can be obtained from a qualified specialist workshop.

The off-road menu in the multimedia system can assist you when you drive off road. Before driving off road, familiarize yourself with its displays and equipment-dependent settings (→ page 458).

Off-road driving

Read this section before driving your vehicle off road. Practice by driving over more gentle off-road terrain first.

- Observe the notes on off-road ABS (→ page 306).
- Select drive program (→ page 257, 258) before driving off road.
- Always keep the engine running and in gear when driving on inclines. Observe the notes on driving in mountainous terrain.
- Do not drive on unknown terrain that is not easily visible and stay on marked routes.
- Always keep the doors and windows closed while the vehicle is in motion.
- Deactivate Active Distance Assist DISTRONIC or cruise control.
- Adapt your driving style to the terrain.
- Do not use the HOLD function on steep gradients with slippery or loose surfaces.

Driving on sand

When driving on sand, also observe the following instructions:

- Select a higher vehicle level.
- Shift to a lower gear.
- Drive quickly to overcome the rolling resistance. Otherwise, the vehicle may dig itself in.
- Drive in the tracks of other vehicles if possible. Make sure that the following prerequisites are met:
  - the tire ruts are not too deep
  - the sand is firm enough
  - the ground clearance is sufficient

Fording

Also observe the following information when fording:

- Do not exceed 6 mph (10 km/h).
- Observe the maximum permissible fording depth (→ page 770, 769).
- Switch off automatic climate control (→ page 216).
- Ensure that a bow wave does not form as you drive.
- Do not stop in the water and do not switch off the engine. Ensure the ECO start/stop function is switched off (→ page 244).

Driving in mountainous terrain

Also observe the following information when driving in mountainous terrain:

- Observe the values for the angle of approach/departure and of the maximum gradient-climbing ability (→ page 770, 769).
- Avoid high engine speeds.
- Use the braking power of the engine when driving downhill.
- Shift to a lower gear on uphill gradients and on long, steep downhill gradients.
- If necessary, activate DSR before driving downhill (→ page 327).

Checklist after driving off road

Driving off-road places greater demands on your vehicle than driving on normal roads. Check the entire vehicle for damage and foreign bodies

every time after driving off road. Foreign bodies in the wheels or drivetrain can lead to imbalances and therefore vibrations.

- If the drive program is selected: select another drive program.
- Deactivate DSR.
- Lower the vehicle level again to a level suitable to the road conditions, e.g. to the normal level.
- Apply the brakes to dry them after fording.
- Check that the service brake is working normally after a long downhill stretch.
- Clean the following components every time after driving off road:
  - license plate number
  - headlamps and tail lamps
  - tires, wheels and wheel arches
  - underbody
- After driving through sand, mud, water or gravel, have the following components checked and cleaned:
  - brake discs and brake linings
  - tires and wheels
  - axle joints

Information on the AMG ceramic high-performance composite brake system

The brake system is designed for heavy loads. This may lead to noise when braking. This effect can also occur after washing the vehicle.

The noise depends on the following factors:

- speed
- brake force
- environmental conditions, e.g. temperature and air humidity

ⓘ Have the brake system checked at a qualified specialist workshop after it has been subjected to extreme loads.

ECO start/stop function

ECO start/stop function

ⓘ **Plug-in hybrid:** the function is not available.

ⓘ Depending on the engine, the ECO start/stop function is not available in all drive programs. Observe the status display in the driver's display for this.

The engine will be switched off automatically in the following situations if all vehicle conditions for an automatic engine stop are met:

- You brake the vehicle to a standstill in transmission position D or N.
- You depress the brake pedal when traveling at a low speed.

If the system has detected one of the following situations, the engine will not stop:

- You stop at a stop sign and there is no vehicle in front of you.
- The vehicle that stopped in front of you sets off again.
- You maneuver, turn the steering wheel sharply or engage reverse gear.

ⓘ If the system detects an intelligent stop inhibitor, e.g. a stop sign, the engine will not stop.

If you activate the HOLD function or engage park position P, the engine can be switched off in spite of an intelligent stop inhibitor.

The engine will restart automatically in the following cases:

- You engage transmission position D or R.
- You depress the accelerator pedal.
- The vehicle requires an automatic engine start.
- You release the brake pedal.
- You release the brake pedal on a downhill gradient and the vehicle does not roll.
- The vehicle rolls on a downhill gradient and does not automatically enter glide mode at 15 mph (20 km/h).

ECO start/stop function symbols on the driver's display:

- The Ⓐ symbol (green) appears when the vehicle is at a standstill: the engine was switched off by the ECO start/stop function.
- The symbol (yellow) appears when the vehicle is at a standstill: not all vehicle conditions for an engine stop have been met.
- Neither the Ⓐ symbol nor the symbol appears when the vehicle is at a standstill: an intelligent stop inhibitor, e.g. a stop sign, has been detected.
- The Ⓐ OFF symbol appears: the ECO start/stop function is deactivated or there is a malfunction.

If the engine was switched off by the ECO start/stop function and you leave the vehicle, a warning tone will sound and the engine will not be restarted. In addition, the following display message will appear on the driver's display:

Vehicle is Ready to Drive Switch Off Vehicle Before Exiting

If you do not switch off the vehicle, it will automatically be switched off after three minutes.

Switching the ECO start/stop function on/off

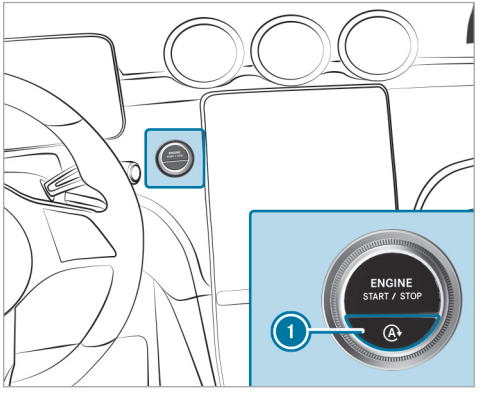

▶ Press button 1.
A display will appear on the driver's display when you switch the ECO start/stop function on/off.

ⓘ Ⓐ OFF will be continuously shown on the driver's display while the ECO start/stop function is deactivated.

Switching the ECO start/stop function on/off (Mercedes-AMG vehicles)

Observe the notes on the ECO start/stop function in the vehicle Operator's Manual.

ⓘ **Plug-in hybrid:** the ECO start/stop function is not available.

ⓘ You can also switch the ECO start/stop function on or off via the steering-wheel button or via the multimedia system.

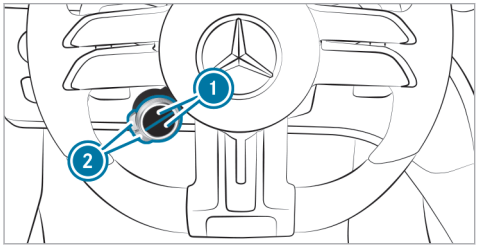

▶ Press upper or lower display button ① repeatedly, until it displays the Ⓐ symbol.

ⓘ If the display button does not show the symbol, then it is hidden. How functions are displayed and the order in which they are displayed can be set in the multimedia system (→ page 253).

▶ Press corresponding button ②.

The symbol indicates the current status of the ECO start/stop function:

- Ⓐ OFF (red): switched off
- Ⓐ (green): activated
- Ⓐ (yellow): inactive

ECO display function

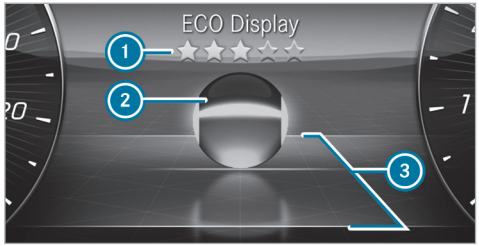

The ECO display shows an evaluation of your driving style on the driver display depending on the situation. This enables you to check the efficiency of your driving style and adjust it if necessary. The ECO Display menu shows a ball ② that will roll forwards or backwards in the direction of travel on a stylized road according to the driving characteristics.

Above and below the road, lines mark the area for an efficient driving style ③. Ball ② will light up in green if it is rolling within these lines. Outside the lines, the ball will light up in orange.

The ECO display assesses the following criteria for an economical driving style:

- Coasting at the right times
- Consistent speed
- Moderate acceleration

The overall assessment of your driving style "from start" is indicated using stars ①. It starts with five empty stars, which you can fill one after the other if you drive efficiently. When all five stars are filled, a glow will appear in the background.

ⓘ You can call up the ECO Display function via the Classic menu (→ page 393).

ECO Assist function (vehicles with 48 V on-board electrical system)

For plug-in hybrids, note the ECO Assist information (→ page 250).

ⓘ ECO Assist is active only in drive programs [E] and [C].

ECO Assist analyzes data for the vehicle's expected route. This allows the system to optimally adjust the driving style for the route ahead, save fuel and recuperate. If the system detects an event ahead and the vehicle nears the event, ECO Assist will calculate the optimum speed for maximum fuel economy and recuperative energy based on the distance, speed and downhill gradient.

If the deceleration provided by ECO Assist is not sufficient, you must also brake with the service brake. This is especially the case if, for example, you pull away again in slow-moving traffic and the distance to the vehicle in front is very short.

① "Foot off the accelerator" recommendation
② Route event ahead

If a route event ahead or a vehicle driving in front is detected which requires an adjustment to your driving style to ensure greater efficiency, corresponding symbol ② and the [ ] symbol will be displayed in gray.

If you release the accelerator pedal, the [ ] symbol will turn green and recuperation in overrun mode will be initiated. If the deceleration is not sufficient, also apply the service brake. If ECO Assist intervenes for a route event ahead (not for a vehicle in front) and you then press the accelerator pedal again, you end ECO Assist's control.

The ECO Assist display is hidden again in the following cases:

- You do not react to the ECO Assist recommendation for a long time.
- You press the accelerator pedal while ECO Assist is intervening for a route event ahead (not for a vehicle in front).
- ECO Assist cannot identify any further recommendations from the route ahead.

In addition to a vehicle in front [ ], ECO Assist can detect the following route events ② depending on the vehicle's equipment:

[ ] Traffic circle
[ ] Sharp bend
[ ] Intersection
[ ] T-intersection
[ ] Downhill gradient
[mph] Speed limit

ⓘ In drive program [C], ECO Assist reacts only to the "Vehicle in front" route event .

System limits

If the calculated route is adhered to when route guidance is active, ECO Assist will operate with greater accuracy. The basic function is also available without active route guidance. Not all information and traffic situations can be foreseen. The quality depends on the map data.

ECO Assist is only an aid. The driver is responsible for keeping a safe distance from the vehicle in front, for vehicle speed and for braking in good time.

The system may be impaired or may not function in the following situations:

- If there is poor visibility, e.g. due to insufficient illumination of the road, highly variable shade conditions, rain, snow, fog or heavy spray.
- If there is glare, e.g. from oncoming traffic, direct sunlight or reflections.
- If the windshield is dirty in the vicinity of the multifunction camera.
- If the multifunction camera is fogged up, damaged or obscured.
- If road signs are hard to detect, e.g. due to dirt, snow or insufficient lighting, or because they are obscured.
- If the digital road map of the navigation system has incorrect or outdated information.
- If signs are ambiguous, e.g. road signs in roadworks or in adjacent lanes.
- If the radar sensors are dirty or obscured.
- When you drive on roads with steep uphill or downhill gradients.
- If there are narrow vehicles in front, such as bicycles or motorcycles.

Recuperative brake system (plug-in hybrid)

Function of the recuperative brake system

ⓘ The function is only available for plug-in hybrids.

The recuperative braking system converts the vehicle's kinetic energy into electrical energy during overrun and braking.

Depending on the selected recuperation level, the electric motor is operated as an alternator when in overrun mode and during braking in order to charge the high-voltage battery while driving. As soon as you take your foot off the accelerator while driving in transmission position D, recuperation starts in overrun mode.

The higher the recuperation, the more sharply the vehicle is braked when coasting and the more electrical energy is fed into the high-voltage battery.

The deceleration in overrun mode may not be sufficient depending on the driving situation. There is no deceleration to a standstill. Also brake with the service brake if necessary. Always adapt your speed to the driving situation and keep sufficient distance.

ⓘ If you brake heavily, the mechanical brake is also used. This means that the maximum recuperation energy cannot be recovered. The more proactively you accelerate and brake, the more efficiently energy can be recuperated.

System limits

With recuperation in overrun mode, the braking effect of the electric motor is only reduced or non-existent in the following situations:

- when the high-voltage battery charge level increases
- if the high-voltage battery is not yet at a normal operating temperature

Manually setting recuperative deceleration

ⓘ The function is only available for a plug-in hybrid.
You can use the steering wheel paddle shifters to adjust the intensity of recuperation in drive programs [H], [B] and [EL].

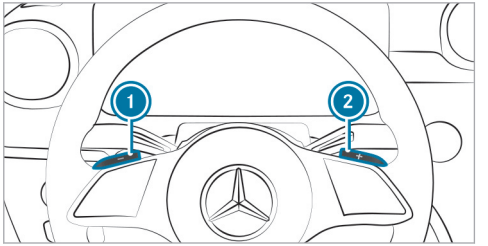

The following recuperation levels are available:

- [D] [AUTO] Intelligent, anticipatory recuperation with ECO Assist (→ page 250)
- [D] [+] No recuperation: the vehicle rolls freely
- [D] Normal recuperation
- [D] [–] Increased recuperation: Strong vehicle deceleration in overrun mode, e.g.for driving on a downhill gradient

Default setting:

- [D] [AUTO]: If the ECO Assist function in the multimedia system is switched on (→ page 251).
- [D]: If the ECO Assist function in the multimedia system is switched off.

ⓘ [D] [AUTO] is only available if the ECO Assistant function in the multimedia system is switched on and if the function of the radar sensors is not impaired. Please also note the information on the vehicle sensors and cameras (→ page 303).

▶ **Increase recuperation:** Pull the paddle shifter ① briefly.

▶ **Reduce recuperation:** Pull the paddle shifter ② briefly.

▶ **Default setting:** Pull long on the paddle shifter ① or ② engage the transmission position [D] again.

ⓘ When the vehicle is started again, the standard setting is also set.

The driver display shows the currently set recuperation level next to the transmission position display.

Setting recuperative deceleration manually (Mercedes-AMG vehicles)

Requirements

- Drive program EL, B, C, S or S+ is selected.
- ESP® is activated – ESP® ON.
- Active Distance Assist DISTRONIC is not activated.

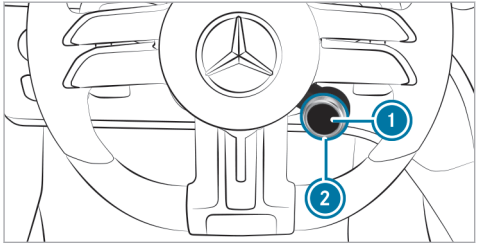

The higher the recuperation, the more sharply the vehicle is braked when coasting and the more electrical energy is fed into the high-voltage battery.

ⓘ When the vehicle is started again or transmission position D is engaged again, standard recuperation is automatically set.

▶ Press display button ①.
The display button shows the symbol with a three-part segment display for setting the recuperation.

ⓘ If the display is grayed out, the requirements are not met and setting is not possible.
If the potential to charge the high-voltage battery is reduced, for example due to a high charge level or because the high-voltage battery is not yet at operating temperature, a recuperation level may not be able to be set at that time. The Desired Recuperation Level Currently Unavailable message is then shown in the driver display.
When the symbol is shown with a red ! on the display button, the regenerative brake system is malfunctioning. Observe the information on warning lamps and display messages which are shown in the driver display.

▶ **To increase recuperation:** turn rotary switch ② clockwise in the + direction.

▶ **To decrease recuperation:** turn rotary switch ② counter-clockwise in the – direction.

The following recuperation levels are available and are shown on display button ①:

- and no segments light up: no recuperation, the vehicle rolls freely
- and one segment lights up: standard recuperation
- and two segments light up: increased recuperation, strong deceleration in overrun mode, e. g. for driving on downhill gradients
- and three segments light up: maximum recuperation, maximum deceleration in overrun mode

ⓘ In drive programs EL, C and B, the intensity of the recuperation is adjusted as needed for downhill gradients: the steeper the incline, the higher the recuperation. Depending on the situation, it may nevertheless be necessary to additionally depress the brake pedal.

If the charge potential of the high-voltage battery has to be reduced due to an increasingly high

charge level, for example, when driving downhill for a long time, the recuperation level is automatically reduced. The Recuperative Deceleration Temporarily Reduced message is then shown in the driver display.

ECO Assist (plug-in hybrid)

ECO Assist function

ⓘ The following function depends on the equipment and the country and is available only for plug-in hybrids.

ECO Assist analyzes data for the vehicle's expected route. This allows the system to help optimally adjust your driving style for the route ahead, save fuel and recuperate. If the system detects an event ahead and the vehicle nears the event, ECO Assist will calculate the optimum speed for maximum fuel economy and recuperative energy based on the distance, speed and downhill gradient.

If the deceleration provided by ECO Assist is not sufficient, you must also brake with the service brake. This is especially the case if, for example, you pull away again in slow-moving traffic and the distance to the vehicle in front is very short.

The function is active under the following conditions:

- The function is activated in the multimedia system (→ page 251).
- The D AUTO recuperation level is selected (→ page 248, 249).
- M manual gearshifting is not activated.
- Drive program S or is not selected.

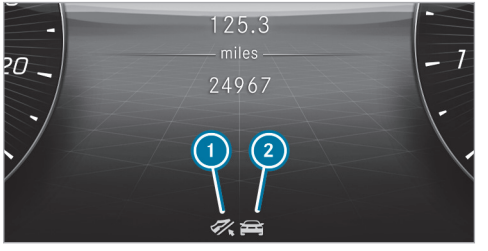

① "Foot off the accelerator" recommendation
② Route event ahead

If a route event that can be dealt with more efficiently by adjusting your driving style is detected ahead, corresponding symbol ② and the symbol will be displayed in gray.

If you release the accelerator pedal, the symbol will turn green and recuperation in overrun mode will be initiated. If the deceleration is not sufficient, also apply the service brake.

If ECO Assist makes adjustments for a route event ahead and you step on the accelerator pedal, ECO Assist control is terminated. This does not apply in the case of a vehicle in front.

The ECO Assist display is hidden again in the following cases:

- You do not react to the ECO Assist recommendation for a long time.
- You press the accelerator pedal while ECO Assist is intervening for a route event ahead. This does not apply in the case of a vehicle in front.
- ECO Assist cannot identify any further recommendations from the route ahead.

In addition to a vehicle in front [ ], ECO Assist can detect the following route events ② depending on the vehicle's equipment:

- [ ] Traffic circle
- [ ] Sharp bend
- [ ] Intersection
- [ ] T-intersection
- [ ] Downhill gradient
- [mph] Speed limit

System limits

If the calculated route is adhered to when route guidance is active, ECO Assist will operate with greater accuracy. The basic function is also available without active route guidance. Not all information and traffic situations can be foreseen. The quality depends on the map data.

ECO Assist is only an aid. The driver is responsible for keeping a safe distance from the vehicle in front, for vehicle speed and for braking in good time.

The system may be impaired or may not function in the following situations:

- If there is poor visibility, e.g. due to insufficient illumination of the road, highly variable shade conditions, rain, snow, fog or heavy spray.
- If there is glare, e.g. from oncoming traffic, direct sunlight or reflections.
- If the windshield is dirty in the vicinity of the multifunction camera.
- If the multifunction camera is fogged up, damaged or obscured.
- If road signs are hard to detect, e.g. due to dirt, snow or insufficient lighting, or because they are obscured.
- If the digital road map of the navigation system has incorrect or outdated information.
- If signs are ambiguous, e.g. road signs in roadworks or in adjacent lanes.
- If the radar sensors are dirty or obscured.
- When you drive on roads with steep uphill or downhill gradients.
- If there are narrow vehicles in front, such as bicycles or motorcycles.

Activating and deactivating ECO Assist

Multimedia system:

→ [ ] ▸▸ Settings ▸▸ Assistance ▸▸ Driving

▶ Activate or deactivate the function.

Function of the route-based operating strategy (plug-in hybrid)

ⓘ The following function is country-dependent and available only in conjunction with an integrated navigation system.

The route-based operating strategy will be active in the following circumstances:

- Driving mode [H] is selected .
- The Route Based option is selected for driving mode [H] in the DYNAMIC SELECT menu (→ page 259).
- Route guidance is active.

- The state of charge of the high-voltage battery is sufficient.

When the function is active, data on the further route will be analyzed. This includes e.g. road type, speed limits and elevation data.

The hybrid system will then adapt the operating strategy to the further course of the route:

- Use of electrical energy and the combustion engine will be adapted.
- The state of charge of the high-voltage battery will be controlled accordingly.
- Electrical energy will be reserved especially for electric mode, e.g. urban route sections or green zones.
- The vehicle will automatically select the operating mode.

Function of the haptic accelerator pedal (plug-in hybrid)

The haptic accelerator pedal has an additional pressure point followed by increased pedal resistance to help you drive in all-electric mode.

Characteristics of the additional pressure point:

- Available only in the EL drive program
- is used when the electric drive support power availability display is full (POWER)
- Indicates the maximum available electric performance

  The subsequent increased pedal resistance indicates that the journey is being continued with the combustion engine.

AMG Real Performance Sound

Selecting a sound characteristic with the steering-wheel button

ⓘ You can select a comfortable (Balanced) or a sporty (Powerful) sound characteristic using the steering-wheel button or the multimedia system (→ page 260).

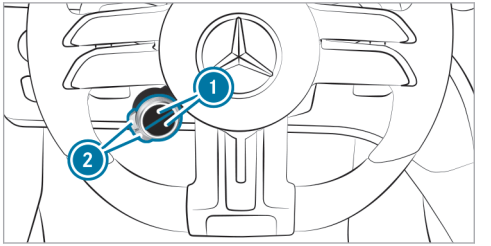

▶ Press upper or lower display button ① repeatedly until it displays the symbol.

Plug-in hybrid: display button ① will show the symbol for the sound characteristic.

ⓘ If the display button does not show the symbol, then it is hidden. How functions are displayed and the order in which they are displayed can be set in the multimedia system (→ page 253).

▶ Press corresponding button ②.

The color of the button symbol indicates the currently selected sound characteristic:

- **Blue:** Balanced – comfortable

- **Red:** Powerful – sporty

ⓘ **Plug-in hybrid:** With the sporty sound characteristic (Powerful), the vehicle will produce speed-dependent driving noise up to approximately 62 mph (100 km/h).

Function of the AMG steering wheel buttons

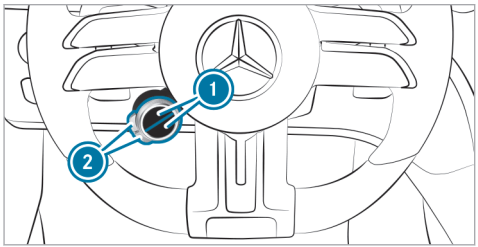

The AMG steering wheel buttons are an additional control element with two buttons on the steering wheel.

You can assign two vehicle functions of your choice to the control element. You can change between the available functions for corresponding button ① by pressing the upper or lower part of display buttons ② repeatedly. Display buttons ① show each function selected.

The following functions are available depending on the equipment:

- ESP® (→ page 307)
- AMG RIDE CONTROL (→ page 353)
- AMG ACTIVE RIDE CONTROL (→ page 354)
- Manual gearshifting (→ page 267)
- ECO start/stop function (→ page 245)
- AMG Real Performance Sound (→ page 252)
- **Plug-in hybrid:** AMG Real Performance Sound (→ page 252)
- Camera views (→ page 359)
- AMG DYNAMICS (→ page 255)
- **Plug-in hybrid:** Boost strategy (→ page 356)

In addition, all the functions you have saved as favorites in the multimedia system will be available for selection. Information on favorites

ⓘ Individual functions may be faded out. How functions are displayed and the order in which they are displayed can be set in the multimedia system (→ page 253).

If you have assigned a specific function to one of display buttons ①, you will be able to operate that function with corresponding button ②.

The assignment of display buttons ① will remain stored even after the vehicle has been started again. The operating status of the respective function will, however, be reset to the basic setting.

Setting the AMG steering wheel buttons

Multimedia system:

→ ⌂ ▸▸ Settings ▸▸ System ▸▸ Control Elements ▸▸ AMG Steer. Wheel Buttons

The left display buttons on the steering wheel can be set in the SETTINGS SELECT menu.

▶ Press [+] and select the desired function from the list.
The selected function is assigned to the corresponding display button and can now be called up directly by simply pressing it.

Deleting button assignment

▶ Select the upper or lower display button and switch to editing mode by pressing and holding it.

▶ Press [⊗] to delete the selected display button assignment.

DYNAMIC SELECT

Function of DYNAMIC SELECT

DYNAMIC SELECT allows a driving mode to be selected quickly according to the current driving conditions or the desired vehicle characteristics. You can select the following driving modes.

ⓘ Depending on the engine and equipment, the vehicle will have different driving modes.

The selected driving mode appears on the driver display.

I* Individual

- Custom settings (→ page 259)
- Custom settings (plug-in hybrid)

S Sport

- Maximum output is available
- Sporty driving
- Sporty, but with an emphasis on stability
- Enables a sporty driver to adopt a more active driving style
- Only suitable for good road conditions, a dry road surface and a clear stretch of road

H Hybrid (plug-in hybrid)

- Comfortable and economical driving
- Balance between traction and stability
- Recommended for all road conditions
- Full range of all intelligent hybrid functions
- Adjustable recuperation in overrun mode
- The selection of the appropriate drive type by the hybrid system depends on the driving conditions and the route

C Comfort

- Comfortable and economical driving
- Balance between traction and stability
- Recommended for all road conditions

EL Electric (plug-in hybrid)

- Electric mode – Driving without the combustion engine is possible up to approx. 87 mph (140 km/h)
- Adjustable recuperation in overrun mode
- Adaptation of Active Distance Assist DISTRONIC for electric mode
- Depending on the equipment, the maximum set speed for cruise control and Active Distance Assist DISTRONIC can be limited to the maximum speed possible in electric mode
- Activation of the combustion engine via the pressure point of the accelerator pedal (kickdown)

B Battery Hold (plug-in hybrid)

- Prioritizes maintaining the state of charge of the high-voltage battery, e.g. for subsequent journeys in the inner city/green zones
- The selection of the appropriate drive type by the hybrid system depends on the driving conditions and the route
- Adjustable recuperation in overrun mode

E Eco

- Particularly economical driving
- Balance between traction and stability
- Recommended for all road conditions

Offroad

- For driving off-road, e.g. on dirt roads, loose surfaces, gravel or sand, as well as on difficult, uneven terrain, off paved roads and on rocky terrain
- Intervenes later if there is oversteer or understeer, thus improving traction
- Not suitable for use on public roads
- Can be selected up to 62 mph (100 km/h)
- From 68 mph (110 km/h): Switches to C
- **Plug-in hybrid:**
  - From 68 mph (110 km/h): Switches to H and lowers the vehicle to standard level
  - Driving in hybrid or electric mode, depending on a sufficient state of charge of the high-voltage battery having and the setting in the multimedia system (→ page 259)

ⓘ The ESP® settings in driving modes E and C are designed for stability. Therefore, choose one of these driving modes especially when transporting roof loads, in trailer operation and when the vehicle is fully laden or fully occupied.
Plug-in hybrid: This also applies to driving modes H, EL and B.

Depending on the driving mode, the following systems will change their characteristics:

- Drive system
  - Engine and transmission management
  - Active Distance Assist DISTRONIC
  - Availability of Gliding mode
- ESP®
- Steering

Function of DYNAMIC SELECT (Mercedes-AMG vehicles)

DYNAMIC SELECT allows a drive program to be selected quickly according to the current driving conditions or the desired vehicle characteristics.

ⓘ Depending on the engine and equipment, the vehicle will have different drive programs.

You can select the following drive programs:

- Slippery
  - Optimized pulling-away and driving characteristics in wintry and slippery road conditions
  - Drive with combustion engine only (plug-in hybrid)
- B Battery Hold (plug-in hybrid)
  - Prioritizes maintaining the state of charge of the high-voltage battery, e.g. for subse-

quent journeys in inner cities/low-emission zones

- The hybrid system will select the appropriate drive type depending on the driving conditions

- EL Electric (plug-in hybrid)
  - Electric mode: driving without the combustion engine is possible up to approximately 77 mph (125 km/h).
  - Limits the maximum set speed for cruise control or Active Distance Assist DISTRONIC to the maximum speed possible in electric mode
  - Activates the combustion engine and changes to the C drive program via the first point of resistance of the haptic accelerator pedal
- C Comfort
  - Comfortable and economical driving
  - The hybrid system will select the appropriate drive type depending on the driving conditions (plug-in hybrid)
- I* Individual
  - Customized settings for drive, suspension, steering and ESP®
- S Sport
  - Sporty driving
  - Balance between stability and sportiness
  - Suitable only for good road conditions, a dry surface and a clear stretch of road
  - Drive with the combustion engine and reinforced boost effect (plug-in hybrid)
- S+ Sport+
  - Particularly sporty driving
  - Emphasizes the vehicle's own oversteer and understeer characteristics
  - Suitable only for good road conditions, a dry surface and a clear stretch of road
  - Drive with the combustion engine and reinforced boost effect (plug-in hybrid)
- Race
  - Maximum sportiness
  - Driving characteristics suited for the racetrack with maximum or racetrack-optimized boost effect (plug-in hybrid)
  - Particularly firm suspension tuning
  - Sporty sound from the exhaust system

ⓘ The drive program is available only for the **Mercedes-AMG GLC 63 S E Performance** model and for vehicles with the **AMG DYNAMIC PLUS package**.

The drive program offers driving characteristics suited to the racetrack and must not be used on normal roads. The drive program may be activated and used only on dedicated race circuits, not on public roads.

Plug-in hybrid: if the boost strategy is activated in the drive program, the electric drive output will be metered in a way that is optimized for a racetrack. It will then be possible to use the maximum boost effect only deliberately via kickdown (→ page 356).

Mercedes-AMG recommends selecting drive program C when in city traffic or stop-and-go traffic.

Depending on the drive program selected, the following vehicle characteristics will change:

- Drive
  - Energy supply for the electric drive output (plug-in hybrid)
- AMG DYNAMICS
  - The four agility functions, Basic, Advanced, Pro and Master, will be selected automatically depending on the drive program.
  - The steering, shift timing point, all-wheel drive and stabilization functions will be adapted to the selected drive program.
  - When ESP® is activated, the Pro agility function will be selected in drive program [ ]. The Master function will be selected automatically when ESP® is switched to SPORT [ESP SPORT] or is switched off [ESP OFF].
- Real Performance Sound
- Sound of the drive system in the vehicle interior
- Suspension
- Steering
- Availability of Glide mode

ⓘ You can set the drive program characteristics using the multimedia system (→ page 260).

ⓘ You can adjust certain agility functions of AMG DYNAMICS using the AMG steering-wheel buttons.

Notes on the roof load display

Certain drive programs and ESP® settings are unsuitable for transporting a roof load.

If one of these drive programs is set or selected, the [ ] symbol is shown as a warning. When this symbol is shown, the selected drive program is not suitable for transporting a load on the roof.

The following drive programs are affected:

- Drive program [S] Sport
- Drive program [I•] Individual with the ESP® setting Sport

Selecting the drive program

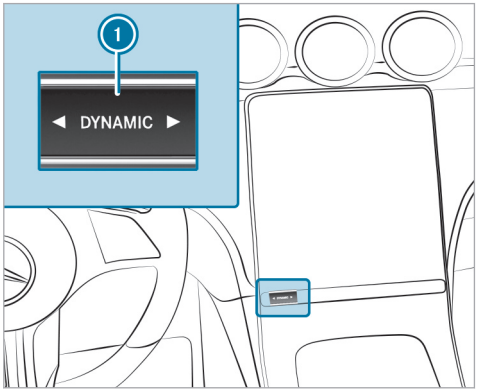

▶ Press DYNAMIC SELECT button ① on the left or right.
The drive program selected appears in the driver's display.

ⓘ In drive program , some driving systems are restricted in their function or not available. When selecting drive program , a confirmation prompt therefore appears on the central display before the drive program is activated.

ⓘ **Plug-in hybrid:** in drive program , you can switch between hybrid and electric mode via the multimedia system (→ page 259).

Select driving mode (Mercedes-AMG vehicles)

Selection with right-hand steering wheel button

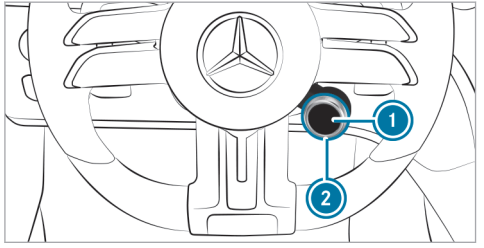

▶ Turn the rotary-type switch 2.
The selected driving mode will appear on the display button 1 and on the driver display.

ⓘ Some driving modes may be hidden. The display of the driving modes and their order can be set in the multimedia system (→ page 260).

▶ **To select the driving mode directly:** press display button 1.

ⓘ **Plug-in hybrid:** Direct selection of the driving mode by pushing the display button 1 is not possible. In a plug-in hybrid, you use the display button 1 to set the regeneration level (→ page 249).

Selection via the central display (multimedia system)

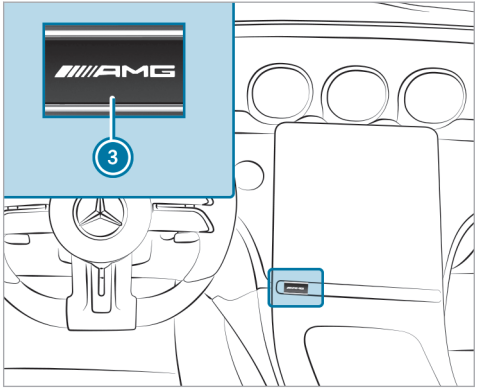

▶ Push the button 3 and select the driving mode via the central display (→ page 260).

Configuring DYNAMIC SELECT in the multimedia system

Multimedia system:

→ [⌂] ▸▸ Settings ▸▸ Vehicle ▸▸ DYNAMIC SELECT

Setting drive program I

▶ Select [I*] Individual.

▶ Select and set a category.

ⓘ A sporty ESP mode can be set in conjunction with a sporty suspension mode.

Setting the H drive program (plug-in hybrid)

▶ Select Hybrid.

▶ Select Route Based or Standard.
If route guidance is active and the Route Based option has been activated, the electrical energy is distributed intelligently over the entire route. In built-up areas, electric mode is preferred, while on the freeway the combustion engine is used.

With the Standard option, the vehicle drives in its standard drive program ([EL] Electric or [H] Hybrid). There is no distribution of electrical energy over the entire route. The high-voltage battery is exhausted and the vehicle is then driven by the combustion engine.

Switching the reset display on/off

▶ Activate or deactivate Request at Start.

ⓘ This function must be activated for each user profile separately. Only when this function is activated will the drive program and ECO start/stop setting for the previous journey be saved for the respective user profile.

Function on: the next time the vehicle is started a prompt appears asking whether the last active drive program should be restored. If the ECO start/stop function was deactivated, an additional prompt appears asking if the function should remain deactivated.

ⓘ The prompt appears only if the previously active settings deviate from the standard settings.

Function off: the next time the vehicle is started the [C] drive program is set automatically. The ECO start/stop function is activated automatically.

Switching the reset display on/off (plug-in hybrid)

▶ Activate or deactivate Request at Start.

ⓘ This function must be activated for each user profile separately. The drive program for the respective user profile of the last driver is only stored if this function is activated.

Function on: the next time the vehicle is started a prompt appears asking whether the last active drive program should be restored.

ⓘ The prompt appears only if the previously active settings deviate from the standard settings.

Function off (plug-in hybrid): if the [EL] drive program was the last one active, and all requirements for the drive program are fulfilled, it will be selected automatically the next time the vehicle is started. If another drive program was active, then the [H] drive program is set automatically.

Displaying vehicle data

Multimedia system:

→ [⌂] ▸▸ Info

▶ Select Vehicle.
The vehicle data is displayed.

Displaying engine data

Multimedia system:

→ [⌂] ▸▸ Info

▶ Select Engine.
The engine data is displayed.

ⓘ The actual maximum values that can be achieved for engine output and engine torque may deviate from the certified values within the country-specific guidelines for permissible tolerances (basis: UN-ECE No. 85 or country-specific guidelines).

Influencing variables include:

- Sea level
- Fuel quality
- Outside temperature
- Operating temperature of the engine

Adjust your driving style accordingly.
The [🌡] warning lamp in the driver display is on until the engine has reached operating temperature.

ⓘ The values displayed serve only as guidance. The values for engine output and engine torque shown on the central display may deviate from the actual values.

ⓘ The [🌡] warning lamp to show the power output limitation after starting the vehicle is not available in all vehicle models.

Calling up the fuel consumption indicator

Multimedia system:

→ [⌂] ▸▸ Info

▶ Select Consumption.
The current and average fuel consumption will be displayed.

Setting AMG DYNAMIC SELECT in the MBUX multimedia system

Multimedia system:

→ [⌂] ▸▸ Settings ▸▸ Vehicle ▸▸ DYNAMIC SELECT

Overview of the AMG DYNAMIC SELECT menu

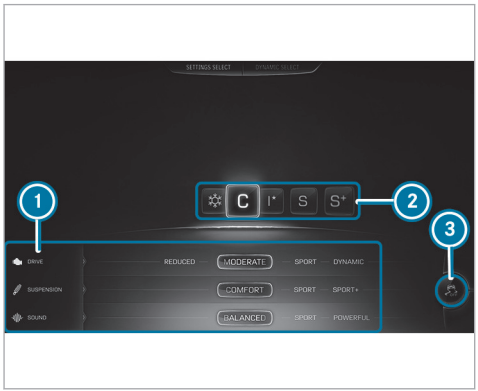

(Example of representation) Representation and arrangement of content equipment-dependent.

1. AMG drive program settings
2. Drive programs
3. ESP® (→ page 307)

▶ Select the appropriate drive program.

The settings of the drive programs can be adjusted individually.

▶ Select the desired tab on the left and make the relevant setting.

Setting options for the drive programs (equipment-dependent):

- Suspension:
  Comfort/Sport/Sport+

Automatic transmission

DIRECT SELECT lever

Function of the DIRECT SELECT lever

⚠ WARNING Risk of accident due to incorrect gearshifting

If the engine speed is higher than the idle speed and you engage the transmission position D or R, the vehicle may accelerate sharply.

▶ If you engage the transmission position D or R when the vehicle is at a standstill, always depress the brake pedal firmly and do not accelerate at the same time.

⚠ WARNING Risk of accident and injury due to children left unattended in the vehicle

If you leave children unattended in the vehicle, they could, in particular:

- open doors, thereby endangering other persons or road users.
- get out and be struck by oncoming traffic.
- operate vehicle equipment and become trapped, for example.

In addition, the children could also set the vehicle in motion by, for example:

- releasing the parking brake.
- changing the gearbox position.
- starting the vehicle.

- Never leave children unattended in the vehicle.
- When leaving the vehicle, always take the key with you and lock the vehicle.
- Keep the key out of reach of children.

WARNING Risk of accident- and injury when the transmission position is not engaged

The current transmission position will be highlighted on the driver display.

If the selected transmission position is not highlighted, the vehicle may pull away in the wrong direction or roll away.

- After changing the transmission position, always check the transmission position indicator on the driver display.

If the transmission position is not highlighted on the driver display even after a short time:

- Pay attention to the display messages.
- Pull away carefully and check the engaged transmission position.
- When parking, engage the parking brake and secure the vehicle against rolling away.
- Have the transmission checked immediately at a qualified specialist workshop.

Use the DIRECT SELECT lever to switch the transmission position. The current transmission position will be highlighted on the driver display.

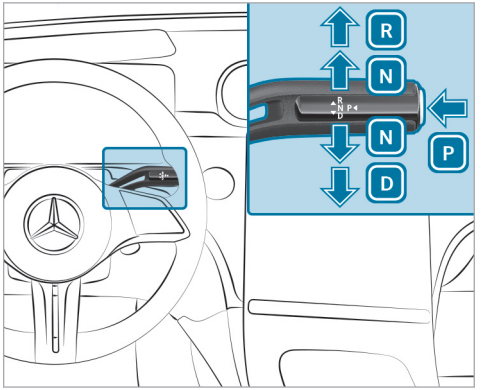

P Park position
R Reverse gear
N Neutral
D Drive position

Engaging reverse gear R

WARNING Risk of accident due to incorrect gearshifting

If the engine speed is higher than the idle speed and you engage the transmission position D or R, the vehicle may accelerate sharply.

- If you engage the transmission position D or R when the vehicle is at a standstill, always depress the brake pedal firmly and do not accelerate at the same time.

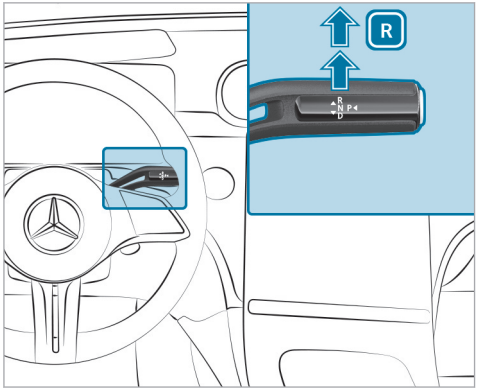

- Depress the brake pedal and push the DIRECT SELECT lever upwards past the first point of resistance.

Engaging neutral N

WARNING Risk of accident due to incorrect gearshifting

If the engine speed is higher than the idle speed and you engage the transmission position D or R, the vehicle may accelerate sharply.

- If you engage the transmission position D or R when the vehicle is at a standstill, always depress the brake pedal firmly and do not accelerate at the same time.

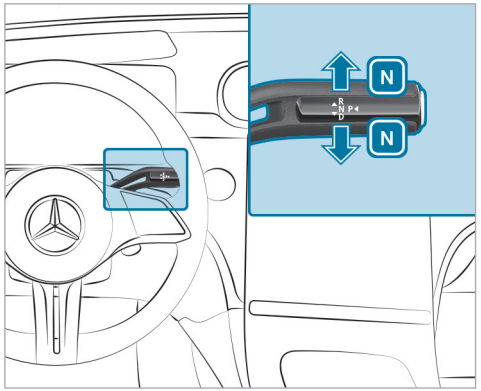

▶ Depress the brake pedal and push the DIRECT SELECT lever up or down to the first point of resistance.

ⓘ To shift into neutral [N] with the vehicle switched on, push the selector lever up or down for several seconds to the first point of resistance.

Subsequently releasing the brake pedal will allow you to move the vehicle freely, e.g. to push it or tow it away.

Proceed as follows if you want the automatic transmission to remain in neutral [N], even if the vehicle is switched off or the driver's door is opened:

▶ Depress the brake pedal and engage neutral [N] when the vehicle is at a standstill.

▶ Release the brake pedal.

▶ Switch off the vehicle.

The Risk of Vehicle Rolling Away N Activated Manually No Automatic Change to P message appears in the driver's display.

ⓘ If you then exit the vehicle leaving the key in the vehicle, the automatic transmission remains in neutral [N].

The park position [P] is automatically re-engaged as soon as one of the following conditions is met:

- You switch to transmission position [D] or [R].
- You press the button [P].

Engaging park position P

⚠ **WARNING** Risk of accident and injury due to children left unattended in the vehicle

If you leave children unattended in the vehicle, they could, in particular:

- open doors, thereby endangering other persons or road users.
- get out and be struck by oncoming traffic.
- operate vehicle equipment and become trapped, for example.

In addition, the children could also set the vehicle in motion by, for example:

- releasing the parking brake.
- changing the gearbox position.
- starting the vehicle.

▶ Never leave children unattended in the vehicle.

▶ When leaving the vehicle, always take the key with you and lock the vehicle.

▶ Keep the key out of reach of children.

! **NOTE** Damage due to engaging park position [P] while the vehicle is rolling

If you shift the transmission into park position [P] while the vehicle is rolling, the transmission may be damaged.

- If the vehicle is rolling, do not open a door.
- Only engage park position [P] when the vehicle is stationary.

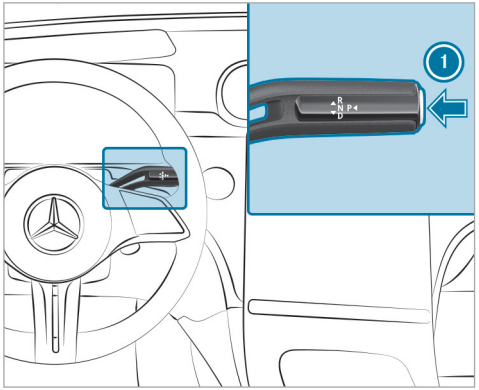

F254 0138 13

- Observe the notes on parking the vehicle (→ page 290).
- Depress the brake pedal until the vehicle comes to a standstill.
- When the vehicle is stationary, press button (1).
  When the transmission position display shows [P], the park position is engaged. If the transmission position display [P] is not shown, apply the parking brake and secure the vehicle to prevent it from rolling away.

ⓘ Depending on the situation, it may take a short time until [P] is engaged. Therefore, always pay attention to the transmission position display.

Park position [P] will be engaged automatically if one of the following conditions is met:

- You switch the stationary vehicle off in transmission position [D] or [R].
- You open the driver's door when the vehicle is stationary in transmission position [D] or [R].
- When the vehicle is rolling, you switch if off in transmission position [D] or [R] and bring it to a standstill.
- When the vehicle is rolling, you shift to transmission position [N], bring the vehicle to a standstill and open the driver's door when the vehicle is stationary.
- Engaging park position [P] automatically is required by the vehicle.

ⓘ To maneuver with an open driver's door, open the driver's door while the vehicle is stationary and engage transmission position D or R again.

Engaging drive position D

WARNING Risk of accident due to incorrect gearshifting

If the engine speed is higher than the idle speed and you engage the transmission position D or R, the vehicle may accelerate sharply.

▶ If you engage the transmission position D or R when the vehicle is at a standstill, always depress the brake pedal firmly and do not accelerate at the same time.

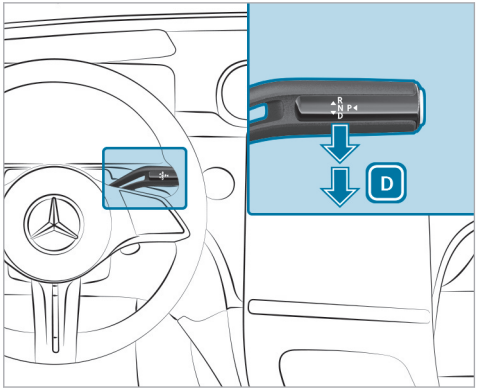

▶ Depress the brake pedal and push the DIRECT SELECT lever down past the first point of resistance.

When the automatic transmission is in transmission position D, it will shift gears automatically. This depends, among other things, on the following factors:

- The selected drive program
- The position of the accelerator pedal
- The driving speed

Rocking the vehicle free

Rocking the vehicle back and forth may help to free the vehicle if it has become stuck in slush or snow.

To rock the vehicle free, move the DYNAMIC SELECT selector lever up and down past the pressure point in order to switch back and forth between transmission positions D and R.

ⓘ The maximum speed for shifting back and forth between D and R is about 6 mph (9 km/h).

Manual gearshifting

ⓘ For plug-in hybrids, observe the information regarding the regenerative brake system (→ page 247).

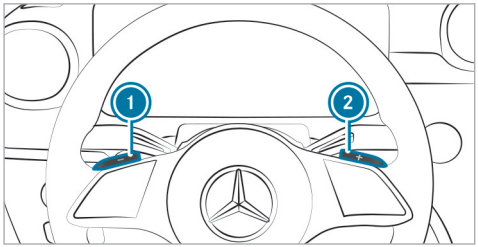

When the automatic transmission is shifted to position D, you can shift it manually with the steering wheel paddle shifters. If permitted, the automatic transmission will shift to a higher or lower gear depending on the steering wheel paddle shifter pulled.

You have two options for manually shifting the automatic transmission:

- Temporary setting
- Permanent setting

The gears are shifted automatically when manual shifting is deactivated.

Temporary setting:

▶ **To activate:** pull steering wheel paddle shifter 1 or 2.
Manual shifting will be activated for a short time. The transmission position display will show M and the current gear.

ⓘ How long manual shifting stays activated depends on various factors.

Manual shifting can be deactivated automatically in the following cases:

- When the drive program is changed
- When the vehicle is restarted
- When transmission position D is engaged again
- Driving style

▶ **To shift up:** pull steering wheel paddle shifter 2.

▶ **To shift down:** pull steering wheel paddle shifter 1.

▶ **To deactivate:** pull and hold steering wheel paddle shifter 2.
The transmission position display will show D.

ⓘ You can activate or deactivate manual shifting permanently in the multimedia system.

Manual shifting (Mercedes-AMG vehicles)

ⓘ You can also activate and deactivate manual gearshifting via the multimedia system (→ page 268).

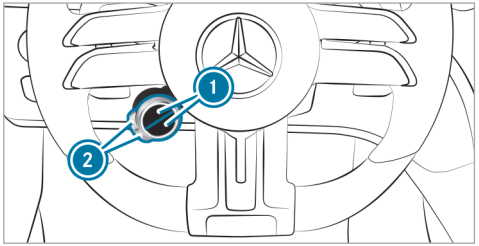

▶ Press the upper or lower display button 1 repeatedly, until it displays the symbol ✸.

ⓘ If the display button does not show the symbol, then it is hidden. How functions are displayed and the order in which they are displayed can be set in the multimedia system (→ page 253).

▶ **To activate/deactivate:** press the corresponding button ②.

The symbol indicates the currently selected transmission position:

- M (red): manual gearshifting
- D (blue): automatic transmission

Plug-in hybrid: automatic transmission must be selected for electric mode. If you select manual mode in drive program EL, the drive program will change to C and the combustion engine will start. If you are driving in electric mode in drive program B or C and select manual mode, the combustion engine will start.

Shifting up and down

! **NOTE** Damage to the engine due to shifting up too late

The automatic transmission does not shift up in manual mode even when the engine's limiting speed is reached.

The fuel supply is interrupted in order to prevent the engine from overrevving.

▶ Shift up before the engine speed reaches the red area in the tachometer.

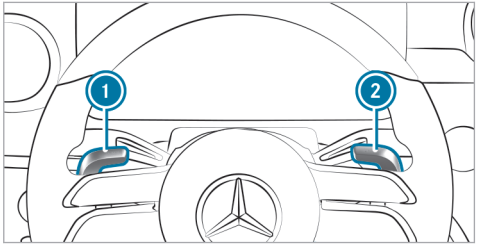

▶ **To shift up:** pull steering wheel paddle shifter ②.

▶ **To shift down:** pull steering wheel paddle shifter ①.

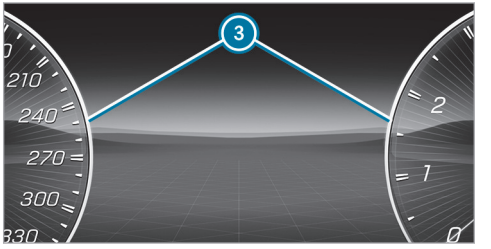

If the engine speed is too high or too low, you will not be able to change gear using the steering wheel paddle shifters. In this case, segments ③ will light up red on the driver's display.

Permanently activating or deactivating manual gearshifting

Multimedia system:

→ ⌂ ▸▸ Settings ▸▸ Vehicle ▸▸ Driving

▶ Permanently switch the function on or off.

Gearshift recommendation

The gearshift recommendation assists you in adopting an economical driving style.

▶ When gearshift recommendation ① appears on the driver's display, shift to the recommended gear.

Using kickdown

▶ **Maximum acceleration:** depress the accelerator pedal beyond the point of resistance.

To protect against engine overrev, the automatic transmission will shift up to the next gear when maximum engine speed has been reached.

Glide mode function

Glide mode helps you to reduce fuel consumption when you employ an anticipatory driving style.

Glide mode is characterized by the following:

- The internal-combustion engine is switched off depending on the driving situation. All the vehicle functions remain active.
- The transmission position display D is shown in green.

Glide mode is activated if the following conditions are met:

- Drive program E is selected.
- The speed is within a suitable range.
- The road's course is suitable, e.g. no steep inclines or tight bends.
- There is no trailer coupled up to the trailer hitch, and there is no bicycle rack installed.
- The state of charge of the battery is sufficient.
- You do not depress the accelerator or brake pedal (except for light brake applications).

ⓘ Glide mode can also be activated if you have selected the "Eco" setting for the drive in the drive program I•.

Glide mode will be deactivated again if one of the conditions is no longer met.

Glide mode can also be prevented by the following parameters:

- Incline
- Downhill gradient
- Temperature
- Altitude
- Speed
- Operating condition of the engine
- Traffic situation

Function of the gliding mode (Mercedes-AMG vehicles)

With an anticipatory driving style, gliding mode helps you to reduce fuel consumption.

When driving in gliding mode, the symbol appears on the driver display and the combustion engine is turned off. All of the vehicle functions remain active.

Gliding mode is activated if the following conditions are met:

- The ECO start/stop function is switched on.
- Drive program is selected with the drive setting "Moderate" or "Reduced".
- The speed is within a suitable range.
- The road's course is suitable, e.g. no steep uphill or downhill inclines or tight bends.
- The state of charge of the battery is sufficient.
- You are no longer depressing the accelerator or brake pedal.

Gliding mode is deactivated again if one of the conditions is no longer met.

Function of the 4MATIC

4MATIC ensures that all four wheels are driven. Together with ESP® and 4ETS, 4MATIC improves the traction of your vehicle whenever a driven wheel spins due to insufficient traction.

If you fail to adapt your driving style, 4MATIC can neither reduce the risk of an accident nor override the laws of physics. 4MATIC cannot take account of road, weather and traffic conditions. 4MATIC is only an aid. You are responsible especially for maintaining a safe distance from the vehicle in front, for vehicle speed, for braking in good time and for staying in lane.

ⓘ In wintry driving conditions, the maximum effect of 4MATIC can only be achieved if you use winter tires (M+S tires), with snow chains if necessary.

Refueling

Refueling the vehicle

WARNING Risk of fire or explosion from fuel

Fuels are highly flammable.

- ▶ Fire, open flames, smoking and creating sparks must be avoided.
- ▶ Before refueling, switch off the vehicle and, if installed, the stationary heater, and leave them switched off during refueling.

WARNING Risk of injury from fuels

Fuels are poisonous and hazardous to your health.

- ▶ Do not swallow fuel or let it come into contact with skin, eyes or clothing.
- ▶ Do not inhale fuel vapor.
- ▶ Keep children away from fuel.

▶ Keep doors and windows closed during the refueling process.

If you or other people come into contact with fuel, observe the following:

▶ Immediately rinse fuel off your skin with soap and water.
▶ If fuel comes into contact with your eyes, immediately rinse them thoroughly with clean water. Seek medical attention immediately.
▶ If you swallow fuel, seek medical attention immediately. Do not induce vomiting.
▶ Change immediately out of clothing that has come into contact with fuel.

WARNING Risk of fire and explosion due to electrostatic charge

Electrostatic charge can ignite fuel vapor.

▶ Before you open the fuel filler cap or take hold of the pump nozzle, touch the metallic vehicle body.
▶ To avoid creating another electrostatic charge, do not get into the vehicle again during the refueling process.

NOTE Damage caused by the wrong fuel

Vehicles with a gasoline engine:

Even small amounts of the wrong fuel could result in damage to the fuel system, the engine and the emission control system.

▶ Refuel only with low-sulfur spark-ignition engine fuel.

This fuel may contain up to 10% ethanol. Your vehicle is suitable for use with E10 fuel.

Never refuel with one of the following fuels:

- Diesel
- Gasoline with more than 10% ethanol by volume (e.g. E15, E85, E100)
- Gasoline with more than 3% methanol by volume (e.g. M15, M30, M85, M100)
- Gasoline with metallic additives

If you have accidentally refueled with the wrong fuel:

▶ Do not switch on the vehicle.
▶ Consult a qualified specialist workshop.

NOTE Do not use diesel to refuel vehicles with a gasoline engine

If you have accidentally refueled with the wrong fuel:

- Do not switch on the vehicle. Otherwise fuel can enter the engine.

  Even small amounts of the wrong fuel could result in damage to the fuel system and the engine. The repair costs are high.

▶ Consult a qualified specialist workshop.
▶ Have the fuel tank and fuel lines drained completely.

! **NOTE** Damage to the fuel system due to overfilling the fuel tank

▶ Only fill the fuel tank until the pump nozzle switches off.

If too much fuel has been added due, for example, to a faulty filling pump:

▶ Do not switch on the vehicle.

▶ Consult a qualified specialist workshop.

! **NOTE** Fuel may spray out when you remove the fuel pump nozzle

▶ Only fill the fuel tank until the pump nozzle switches off.

Requirements

- The vehicle is unlocked.
- **Plug-in hybrid with gasoline engine:** the fuel tank was bled before refueling (→ page 273).

Observe the notes on service fluids and fuel.

Refuel only with fuel that has at least the octane number specified in the information label in the fuel filler flap. Otherwise, engine output may be reduced and fuel consumption increased.

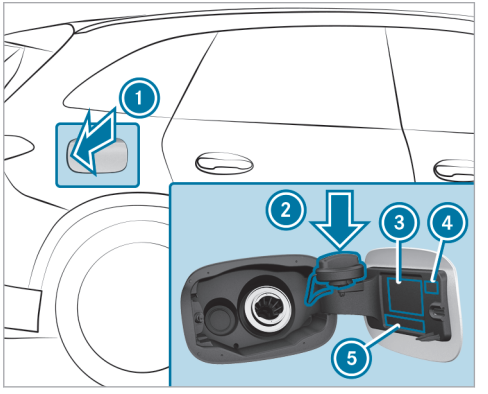

1. Fuel filler flap
2. Bracket for the fuel filler cap
3. Tire pressure table
4. QR code for rescue card
5. Fuel type

ⓘ **Plug-in hybrid with gasoline engine:** the fuel filler flap opens automatically after the fuel tank has been bled (→ page 273).

▶ Press in the center on the back area of fuel filler flap 1.

▶ Turn the fuel filler cap counter-clockwise and remove it.

▶ Insert fuel filler cap from above into bracket 2.

▶ Completely insert the pump nozzle into the tank filler neck, hook in place and refuel.

▶ Fill the fuel tank only until the pump nozzle switches off.

▶ Replace the cap on the filler neck and turn clockwise until it engages audibly.

▶ Close fuel filler flap 1.

Depressurizing the fuel tank (plug-in hybrid with gasoline engine)

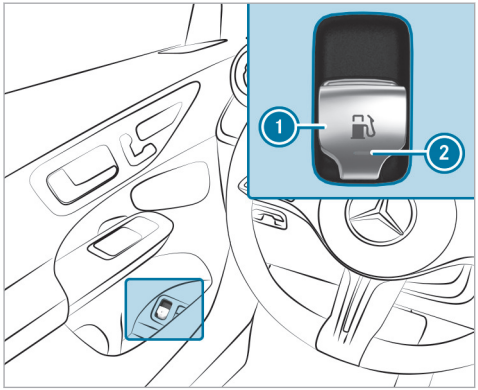

▶ Pull switch ① once briefly.
Indicator lamp ② will flash and the Please Wait Depressurizing Fuel Tank message will appear on the driver's display.

When the fuel tank is depressurized, indicator lamp ② will light up steadily.

The Fuel Tank Is Depressurized Ready for Refueling message will appear on the driver display and the fuel filler flap will open automatically.

ⓘ Depressurizing the fuel tank may take several minutes.

The fuel tank can only be depressurized if the conditions described above are fulfilled. Otherwise, drive the vehicle at least 1/3 mile (0.5 km) and repeat the process.

ⓘ In the following situations, there is a malfunction:

- Indicator lamp ② flashes initially and then goes out.
- The yellow engine diagnostics warning lamp lights up.

! NOTE Damage to the fuel filler flap when opening it

If an attempt is made to open a fuel filler flap that is not unlocked, the fuel filler flap or the opening mechanism may be damaged.

▶ Only refuel when the fuel filler flap has opened automatically.

You can watch an animation on this topic via the following link:

Charging the high-voltage battery (plug-in hybrid)

Notes on charging the high-voltage battery

! NOTE High-voltage battery damage due to leaving the vehicle idle for lengthy periods of time

Lithium-ion batteries experience a natural self-discharge.

Exhaustive discharging can therefore occur if the vehicle is idle for several months. This can damage the high-voltage battery.

▶ To avoid damage, please observe the following recommendations when handling the high-voltage battery.

NOTE Accelerated aging of the high-voltage battery due to not observing the following recommendations

As a result of its basic characteristics, the storage capacity of and the amount of energy available from the high-voltage battery decreases over the course of its life. Due to this, both the maximum electrical range that can be achieved by the vehicle and its maximum electrical output can be impaired.

The following factors could accelerate the aging of the high-voltage battery:

- A high condition of charge, especially if the vehicle is idle for a lengthy period of time
- Frequent rapid charging with direct current (mode 4)
- Leaving the vehicle idle for lengthy periods at high ambient temperatures

▶ To avoid accelerated aging, please observe the following recommendations when handling the high-voltage battery.

NOTE Damage to the drive system when the high-voltage battery is charged at extreme altitudes

The drive system may be damaged if you charge the high-voltage battery at extreme altitudes more than 13123.36 ft (4000 m) above sea level.

Continuing the journey may then no longer be possible.

▶ Avoid charging processes at extreme altitudes.

Recommendations when handling the high-voltage battery:

- Rapid-charge the high-voltage battery with direct current (Mode 4) only when required.
- If the vehicle is to be idle for a longer period, park it with the high-voltage battery at a charge level between 25 % and 30 %. Do not permanently connect the high-voltage battery to a power supply.
- If leaving the vehicle idle for lengthy periods, avoid high outside temperatures wherever possible.
- Check the charge level of the high-voltage battery every six weeks (→ page 290).
- Be sure to charge the high-voltage battery if the charge level is below 15 %.
- Do not disconnect the 12 V battery even if the vehicle is left unused for a lengthy period. Otherwise the condition of the vehicle's high-voltage battery cannot be monitored.
- When only using the high-voltage battery with low states of charge, fully charge the high-voltage battery twice a year.

Depending on the equipment, your vehicle is equipped with one of the following vehicle sockets:

- Type 1 for charging with alternating current (mode 2/3)
- Type Combo 1 for charging with alternating current (mode 2/3) and charging with direct current (mode 4)

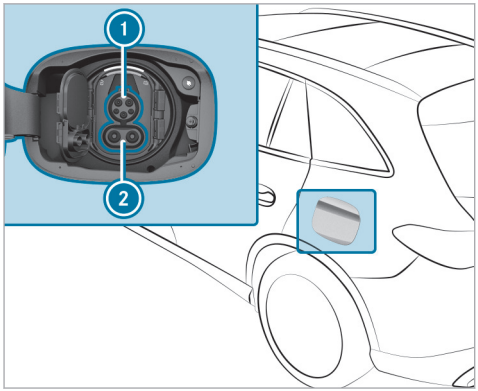

Example: type Combo 1 vehicle socket

1. AC charging port
2. Socket extension for DC charging

ⓘ When using a CCS charging cable (Combined Charging System) for charging with direct current, both areas of the vehicle socket are covered by the charging cable plug.

Charging options for the high-voltage battery (mode 2, 3 or 4):

- While the vehicle is in motion by means of recuperation
- Stationary alternating current charging:
  - At a mains socket (mode 2)
  - At a wallbox or charging station (mode 3)
- Stationary DC charging:
  - At a rapid-charging station (mode 4)

Depending on the country-specific vehicle equipment and your vehicle's charging cable, single phase AC charging is also possible.

Observe the different grid requirements of your current location when charging. Only use charging cables which conform to the grid requirements. Consult a qualified electrician or your local grid operator if you have any questions.

It is recommended that you charge the high-voltage battery at a wallbox or charging station due to the improved charging power and better charging efficiency offered.

System limits

The power output of the high-voltage battery may be impaired by the following:

- high or low outside temperatures
- Electrical auxiliary consumers in the vehicle being switched on, e.g. operating the air conditioning system
- extended periods without charging

The charging time or the charging power of the high-voltage battery may be increased by the following:

- high or low outside temperatures
- a low or high state of charge of the high-voltage battery
- The maximum available charge current of the charging device

Stowing the charging cable

Always stow the vehicle's charging cable in the charging cable bag provided, and secure the charging cable bag in the trunk or cargo compart-

ment with the included retaining strap. Otherwise, the charging cable bag with the charging cable will not be sufficiently secured.

Example: charging cable bag in the trunk/cargo compartment

As delivered, charging cable bag ① with retaining strap ② is located in the trunk or cargo compartment. To secure the charging cable bag, the retaining strap must be attached to cargo tie-down ring ③. Do not use bag hooks to attach the retaining strap.

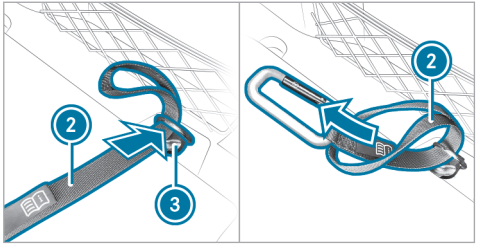

- Feed the loop end of retaining strap ② through cargo tie-down ring ③ into the trunk or cargo compartment.
- Feed the end with the snap hook through the loop of retaining strap ②.

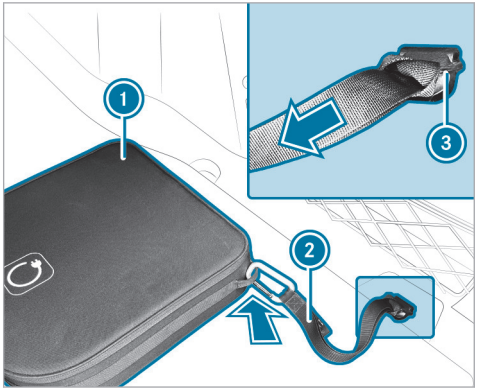

- Tighten retaining strap ② so that the knot around cargo tie-down ring ③ is tight and secure.
- Hook the snap hook of retaining strap ② in a tie-down eye of charging cable bag ①.

Notes on charging the high-voltage battery at a mains socket (Mode 2)

⚠ **DANGER** Risk of fatal injury from incorrectly installed component parts

Connecting the charging cable to a mains socket using incorrectly installed component parts could cause a fire or an electric shock, for example.

▶ Only connect the charging cable to a mains socket that:

- has been properly installed and
- has been inspected by a qualified electrician

▶ For safety reasons, only use the charging cable supplied with the vehicle or an original Mercedes-Benz charging cable.

▶ Purchase these parts at an authorized Mercedes-Benz Center and obtain advice there.

Mercedes-Benz thoroughly tests these original charging cables for their suitability for high-voltage charging of your vehicle.

▶ Never use a damaged charging cable.

▶ Do not use:

- extension cables
- extension reels
- multiple sockets

▶ Never use socket adapters to connect the charging cable to the mains socket. The only exception being if the adapter has been tested and approved by the manufacturer for charging the high-voltage battery of an electric vehicle.

▶ Observe the safety notes in the operating instructions for the socket adapter.

Only the following charging cables may be used:

- The charging cable supplied with the vehicle.
- A charging cable that has been approved for the vehicle.

The charging process can vary depending on the power supply equipment. The charging times when charging the high-voltage battery at the mains socket are considerably longer than when charging at a wallbox or charging station.

When doing so, always observe the local information.

Do not leave the charging cable controls hanging loose from a mains socket.

Do not lift the controls by the following component parts:

- the charging cable connector
- the mains plug

When charging, protect the charging cable control element from excessive heat such as direct sunlight. Otherwise the charging process may be aborted.

Notes on charging the high-voltage battery at a wallbox or charging station (mode 3)

DANGER Risk of fatal injury from incorrectly installed component parts

Connecting the charging cable to the vehicle using incorrectly installed components could cause a fire or an electric shock, for example.

▶ Only connect the charging cable to a wallbox if:

- The wallbox has been properly installed
- The wallbox has been inspected by a qualified electrician
- The charging cable is not damaged

▶ Do not extend the charging cable.

▶ Do not use adapters.

▶ Observe the safety notes in the operating instructions for the wallbox.

DANGER Risk of fatal injury due to damaged components

Connecting the vehicle to a charging station using damaged component parts could cause a fire or an electric shock, for example.

▶ Perform a visual check of the charging station for obvious defects, for example damage to the housing or charging cable connection.

▶ Never use damaged charging cables.

▶ Do not use an extension for the charging cable.

▶ Do not use adapters.

▶ Always observe the safety instructions on the charging station.

Most charging stations must be activated before the charging process, e.g. using an RFID card or via Plug-and-Charge. Observe the on-site operator's instructions for the charging station and the notes on Mercedes me Charge (→ page 469).

The amount of energy dispensed for the charging process, shown by the charging station, may be higher than the amount of energy actually absorbed by the high-voltage battery. This is the result of different levels of charging losses and is described as recharge efficiency. Charging losses occur, for example, due to heat that builds up when the vehicle is charging or from auxiliary consumers that are switched on. Further information on recharge efficiency can be obtained at a qualified specialist workshop.

Notes on charging the high-voltage battery at a rapid charging station (mode 4)

DANGER Risk of fatal injury due to damaged components

Connecting the vehicle to a charging station using damaged component parts could cause a fire or an electric shock, for example.

▶ Perform a visual check of the charging station for obvious defects, for example damage to the housing or charging cable connection.

▶ Never use damaged charging cables.

- Do not use an extension for the charging cable.
- Do not use adapters.
- Always observe the safety instructions on the charging station.

DANGER Risk of fatal injuries when carrying out maintenance work during the charging process

During the charging process, the high-voltage on-board electrical system is under high voltage.

- Do not perform any maintenance work during the charging process.

Most charging stations must be activated before the charging process, e.g. using an RFID card or via Plug-and-Charge. Observe the on-site operator's instructions for the charging station and the notes on Mercedes me Charge (→ page 469).

The amount of energy dispensed for the charging process, shown by the charging station, may be higher than the amount of energy actually absorbed by the high-voltage battery. This is the result of different levels of charging losses and is referred to as charging efficiency. Charging losses occur, for example, due to heat that builds up when the vehicle is charging or from auxiliary consumers that are switched on. Further information on charging efficiency can be obtained at a qualified specialist workshop.

Maximum permissible charging current for charging at a mains socket

NOTE Overloading the mains socket due to excessive charging current

If the charging current is too high, the fuse could be tripped or the external mains supply could overheat.

- Ensure that the external mains supply has been designed to handle the charging current provided.
- For safety reasons, only use the charging cable supplied with the vehicle or an original Mercedes-Benz charging cable. Mercedes-Benz thoroughly tests these original charging cables for their suitability for high-voltage charging of your vehicle.
- Purchase these parts at a Mercedes-Benz service center and obtain advice there.
- Check the maximum charging current using the charging capacity shown on the driver's display.

The charging cable supplied is set to a country-specific maximum charging current value. When charging abroad, the maximum value may exceed the permitted value for that country.

- Before charging at a mains socket, have the maximum permissible charging current for the relevant mains socket or the building checked by a qualified electrician.
- When abroad, observe the country-specific laws when charging.

If you have questions concerning the charging current or if there is a malfunction, please contact a qualified specialist workshop.

Overview of the charging cable control panel

The charging cable control panel described below shows the current status of the charging process.

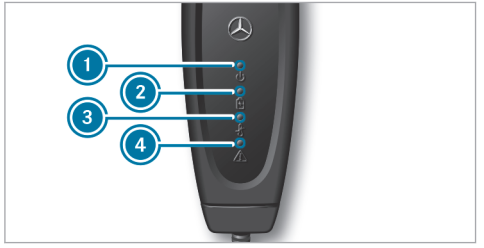

1. Supply voltage indicator
2. Charging process indicator
3. Temperature monitor indicator
4. Safety system indicator

Supply voltage indicator 1

Display	Meaning
Lights up white	The supply voltage is connected.

Charging process indicator 2

Display	Meaning
Flashes green	The high-voltage battery is charging.

Temperature control indicator 3

Display	Meaning
Lights up red	The green LED flashes simultaneously: overtemperature – the charging performance is reduced. The green LED does not flash: overtemperature – the charging process is stopped.
Flashes red	Overtemperature at the mains plug – the charging process is stopped.

Safety system indicator ④

Display	Meaning
Flashes red	Charging cable malfunction – cannot carry out the charging process, reset the charging cable control panel.
Lights up red	White LED is off: power supply malfunction – cannot carry out the charging process, replace the mains socket. White LED is on: vehicle malfunction – cannot carry out the charging process, reset the charging cable control panel.

When all four displays light up, the charging cable control panel is performing a self-test.

If the temperature monitor ③ indicates a malfunction, it may help to protect the charging cable from direct sunlight.

To reset the charging cable control panel: if safety system ④ indicates a charging cable malfunction or a vehicle malfunction, first reset the charging cable operating unit. To do this, disconnect the charging cable from the vehicle and from the mains socket and wait for approximately five seconds. If the malfunction persists after the charging cable is reconnected, charging at the mains socket is not possible. The charging cable must be replaced or the vehicle plug must be checked at a qualified specialist workshop, depending on the indicator.

Functions of the indicator lamps on the vehicle socket

The socket flap is centrally locked and unlocked together with the vehicle.

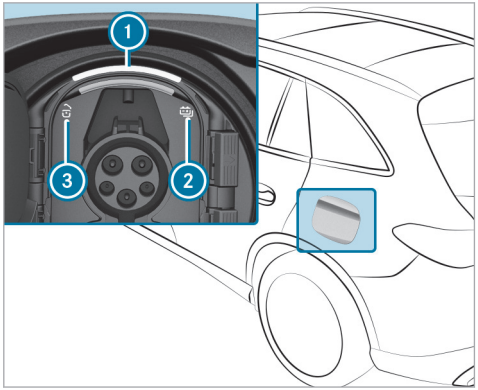

Example: type Combo 1 vehicle socket
① Socket lamp
② Charging process indicator lamp
③ Locking status indicator lamp

The upper curve of he socket lamp ① is used for the lighting and flashes or lights up as with indicator lamp ③. The lower curve is used for the sta-

tus display and flashes or lights up as with indicator lamp ②.

The color and signaling of the indicator lamps ② and ③ have the following meaning.

Locking status ③

- Lights up white: vehicle socket unlocked; insert or remove charging cable
- Flashes white: malfunction during locking or unlocking

Status of the charging process ②

- Lights up green (for approx. 60 s): charging process completed
- Flashes green: charging; active energy flow
- Lights up orange (for approx. 60 s): charging break
- Flashes orange: connection is being established
- Flashes red (for approx. 90 s): malfunction in vehicle; charging not possible

Starting the AC charging process (Mode 2/3)

DANGER Risk of death when charging at a damaged socket

The charging process uses high voltage.

If the charging cable, the vehicle socket or the mains socket are damaged, you could receive an electric shock.

- ▶ Only use an undamaged charging cable.
- ▶ Avoid mechanical damage such as crushing, abrading or driving over the cable.
- ▶ Have a damaged vehicle socket replaced at a qualified specialist workshop as soon as possible.
- ▶ Never connect the charging cable to a damaged vehicle socket.

NOTE Damage due to overheating of charging cable and charge port

During the charging process, the charging cable and charge port can heat up within the permissible limits.

The permissible limit values are influenced by the following factors:

- the power supply system and the charging cable are not damaged
- the instructions for handling the charging cable and the control element on the charging cable have been observed

- ▶ If the charging cable or charge port becomes too hot, have the power supply system checked.

NOTE Damaged or dirty vehicle socket when the socket flap is open

- ▶ Always keep the socket cover and the socket flap closed when there is no charging cable connected. This protects the vehicle socket from dirt and damage.
- ▶ Make sure that the socket cover is closed properly before closing the socket flap. This can otherwise result in damage which may prevent the socket flap from being opened again.

NOTE Damage to the vehicle socket or the charging cable connector due to incorrect handling

Do not use excessive force (maximum 67.4 lbf (300 N)) to fully insert the charging cable connector into the vehicle socket. You may otherwise damage the vehicle socket, the charging cable connector or their contacts.

▶ If you feel there is increased resistance, pull the charging cable connector out of the socket and reinsert it.

Requirements

- The transmission is in position P.
- The vehicle is unlocked, or the vehicle is locked and the distance between the key and the vehicle does not exceed 3 ft (1 m).
- The charging cable is not taut.

Depending on the equipment, your vehicle is equipped with one of the following vehicle sockets.

- Type 1 for AC charging (Mode 2/3)
- Type Combo 1 for AC charging (Mode 2/3) and DC charging (Mode 4)

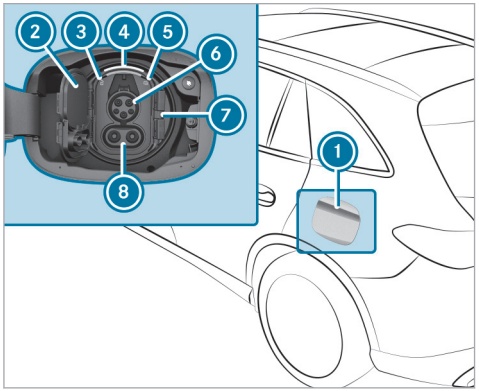

Type Combo 1 vehicle socket (example)

▶ Press the center rear of the socket flap 1 and swing it forwards to open.
The indicator lamp 3 and upper status display 4 light up white.

ⓘ The socket flap 1 can also be opened via the multimedia system (→ page 457).
If the socket flap 1 cannot be opened despite the vehicle being unlocked, the charge socket flap can be opened by emergency release (→ page 289).

▶ Press catch 7 to the right and fold up socket cover 2.

ⓘ Only connector 6 is required for the charging cable connector in vehicles with a Combo vehicle socket. Only open the upper section of the socket cover 2.

▶ To charge at a mains socket, fully insert the mains plug into the mains socket of the external power source.

▶ Fully insert the charging cable connector into vehicle socket 6. If the wallbox/charging station is not equipped with a charging cable, fully insert the plug of the vehicle's charging cable into the wallbox/charging station socket.
Make sure that the charging cable is not taut when inserted.

The indicator lamp ⑤ [⊟] and lower status display ④ flash orange, and green as soon as the high-voltage battery is being charged.

When the charging cable is connected to the vehicle, the vehicle cannot be started or moved.

At the start of the charging process, the charge level display is shown in the driver display with an estimated completion time. The completion time is the time when the high-voltage battery will be fully charged.

ⓘ Depending on the temperature, the fan and battery cooling system may audibly switch on during the charging process.

ⓘ If the vehicle is idle for lengthy periods and connected to the mains supply, the high-voltage battery will be recharged automatically as needed or when electrical consumers are activated (e.g. the pre-entry climate control).

ⓘ The vehicle is equipped with an electric safety mechanism to protect against overvoltages in the power grid. This device may be triggered during severe thunderstorms, for example, and may lead to the building's circuit breaker being tripped and an interruption in the power supply. These functions serve to protect the vehicle.
After switching the building fuse back on again the charging process is automatically continued. During a charge interruption without triggering the building fuse it may take up to ten minutes for the charging process to continue automatically.

Ending the alternating current charging process (mode 2/3)

⚠ **DANGER** Risk of death when charging at a damaged socket

The charging process uses high voltage.

If the charging cable, the vehicle socket or the mains socket are damaged, you could receive an electric shock.

▶ Only use an undamaged charging cable.

▶ Avoid mechanical damage such as crushing, abrading or driving over the cable.

▶ Have a damaged vehicle socket replaced at a qualified specialist workshop as soon as possible.

▶ Never connect the charging cable to a damaged vehicle socket.

! **NOTE** Damage due to overheating of charging cable and charge port

During the charging process, the charging cable and charge port can heat up within the permissible limits.

The permissible limit values are influenced by the following factors:

- the power supply system and the charging cable are not damaged
- the instructions for handling the charging cable and the control element on the charging cable have been observed

▶ If the charging cable or charge port becomes too hot, have the power supply system checked.

! NOTE Damaged or dirty vehicle socket when the socket flap is open

- Always keep the socket cover and the socket flap closed when there is no charging cable connected. This protects the vehicle socket from dirt and damage.
- Make sure that the socket cover is closed properly before closing the socket flap. This can otherwise result in damage which may prevent the socket flap from being opened again.

Requirements

- The vehicle is unlocked or the vehicle is locked and the distance between the key and the vehicle does not exceed 3 ft (1 m).

Depending on the equipment, your vehicle is equipped with one of the following vehicle sockets:

- Type 1 for charging with alternating current (mode 2/3)
- Type Combo 1 for charging with alternating current (mode 2/3) and charging with direct current (mode 4)

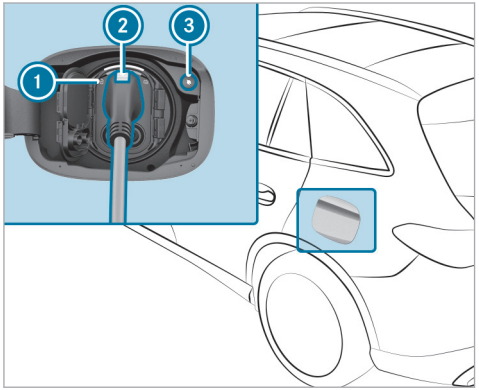

Example:Type Combo 1 vehicle socket

ⓘ Vehicles equipped with a Type 1 vehicle socket for AC charging have no charging interruption button ③.

- **Type Combo 1 vehicle socket:** press the charging interruption button ③.
  The charging process is ended. The [🔓] indicator lamp ① lights up white. The vehicle socket is unlocked.

ⓘ As an alternative, and only if the charging interruption button ③ is not working, you can unlock the vehicle using the vehicle key or centrally from inside to end the charging process. If the indicator lamp [🔓] ① then lights up white, the vehicle socket is unlocked for around 30 seconds.

ⓘ The charging process can also be ended via the multimedia system (→ page 457).

- **Type 1 vehicle socket:** unlock the vehicle with the vehicle key or centrally from inside.
  The charging process is ended. The [🔓] indicator lamp ① lights up white. The vehicle socket is unlocked.
- Press and hold button ② on the charging cable plug and remove the charging cable plug from the vehicle socket.

ⓘ If you cannot remove the charging cable plug, repeat the unlocking procedure. If the charging cable plug is still locked, contact a qualified specialist workshop.

▶ Close the socket cover and the socket flap.

ⓘ The indicator lamp 🔓 ① on the vehicle socket remains lit for some time before going out.

Starting the direct current charging process (mode 4)

⚠ DANGER Risk of death when charging at a damaged socket

The charging process uses high voltage.

If the charging cable, the vehicle socket or the mains socket are damaged, you could receive an electric shock.

▶ Only use an undamaged charging cable.

▶ Avoid mechanical damage such as crushing, abrading or driving over the cable.

▶ Have a damaged vehicle socket replaced at a qualified specialist workshop as soon as possible.

▶ Never connect the charging cable to a damaged vehicle socket.

! NOTE Damage due to overheating of charging cable and charge port

During the charging process, the charging cable and charge port can heat up within the permissible limits.

The permissible limit values are influenced by the following factors:

- the power supply system and the charging cable are not damaged
- the instructions for handling the charging cable and the control element on the charging cable have been observed

▶ If the charging cable or charge port becomes too hot, have the power supply system checked.

! NOTE Damaged or dirty vehicle socket when the socket flap is open

▶ Always keep the socket cover and the socket flap closed when there is no charging cable connected. This protects the vehicle socket from dirt and damage.

▶ Make sure that the socket cover is closed properly before closing the socket flap. This can otherwise result in damage which may prevent the socket flap from being opened again.

! NOTE Damage to the vehicle socket or the charging cable connector due to incorrect handling

Do not use excessive force (maximum 67.4 lbf (300 N)) to fully insert the charging cable connector into the vehicle socket. You may otherwise damage the vehicle socket, the charging cable connector or their contacts.

▶ If you feel there is increased resistance, pull the charging cable connector out of the socket and reinsert it.

Requirements

- The transmission is in position P.
- The vehicle is unlocked or the vehicle is locked and the distance between the key and the vehicle does not exceed 3 ft (1 m).
- The charging cable is not taut.

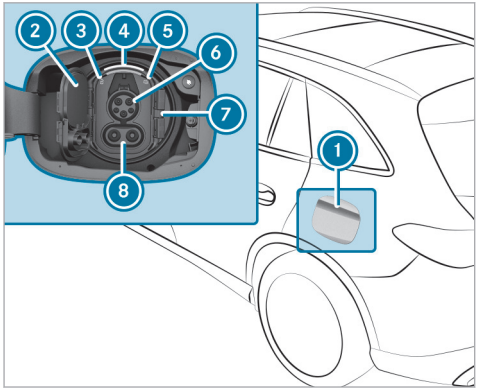

▶ Push on the center rear of the socket flap 1 and swing the socket flap forwards.
The indicator lamp 3 [ ] and upper status display 4 light up white.

ⓘ The socket flap 1 can also be opened via the multimedia system (→ page 457).
If socket flap 1 cannot be opened despite the vehicle being unlocked, the charge socket flap can be opened with the emergency release (→ page 289).

▶ Push latch 7 to the right and flip up socket cover 2.

ⓘ The connections 6 and 8 are required for the CCS charging cable plug. Both sections of the socket cover must therefore be opened 2.

▶ Fully insert the CCS charging cable plug into the vehicle socket .
Make sure that the charging cable is not taut when inserted.

The indicator lamp 5 [ ] and lower status display 4 flash orange, and green as soon as the high-voltage battery is being charged.

When the charging cable is connected to the vehicle, the vehicle cannot be started or moved.

At the start of the charging process, the state of charge indicator is shown on the driver display with a predicted completion time. The predicted completion time either refers to the predicted state of charge at the set departure time, or the time at which the high-voltage battery will be fully charged.

ⓘ Depending on the temperature, the fan and battery cooling system may audibly switch on during the charging process.

ⓘ If the vehicle is idle for lengthy periods and connected to the power grid, the high-voltage battery will be recharged automatically as needed or when electrical consumers are activated (e.g. the pre-entry climate control).

Ending the direct current charging process (mode 4)

DANGER Risk of death when charging at a damaged socket

The charging process uses high voltage.

If the charging cable, the vehicle socket or the mains socket are damaged, you could receive an electric shock.

- Only use an undamaged charging cable.
- Avoid mechanical damage such as crushing, abrading or driving over the cable.
- Have a damaged vehicle socket replaced at a qualified specialist workshop as soon as possible.
- Never connect the charging cable to a damaged vehicle socket.

NOTE Damage due to overheating of charging cable and charge port

During the charging process, the charging cable and charge port can heat up within the permissible limits.

The permissible limit values are influenced by the following factors:

- the power supply system and the charging cable are not damaged
- the instructions for handling the charging cable and the control element on the charging cable have been observed

- If the charging cable or charge port becomes too hot, have the power supply system checked.

NOTE Damaged or dirty vehicle socket when the socket flap is open

- Always keep the socket cover and the socket flap closed when there is no charging cable connected. This protects the vehicle socket from dirt and damage.
- Make sure that the socket cover is closed properly before closing the socket flap. This can otherwise result in damage which may prevent the socket flap from being opened again.

Requirements

- The vehicle is unlocked or the vehicle is locked and the distance between the key and the vehicle does not exceed 3 ft (1 m).

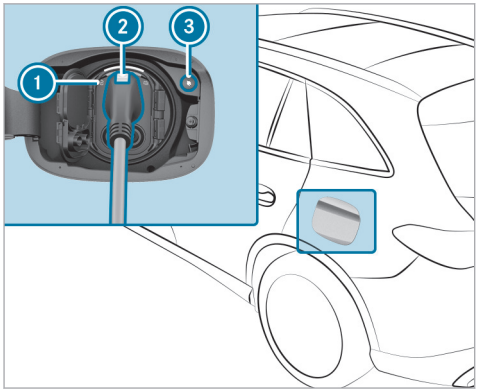

▶ Press charging interruption button ③.
The charging process is ended. The [🔓] indicator lamp ① lights up white. The vehicle socket is unlocked.

ⓘ As an alternative, and only if the charging interruption button ③ is not working, you can unlock the vehicle using the vehicle key or centrally from inside to end the charging process. If the indicator lamp [🔓] ① then lights up white, the vehicle socket is unlocked for around 30 seconds.

ⓘ The charging process can also be ended via the multimedia system (→ page 457).

▶ Press and hold button ② on the charging cable plug and remove the charging cable plug from the vehicle socket.

ⓘ If you cannot remove the charging cable plug, unlock the vehicle and repeat the unlocking procedure. If the charging cable plug is still locked, contact a qualified specialist workshop.

▶ Close the socket cover and the socket flap.

ⓘ After the charging cable plug has been disconnected, the left [🔓] indicator lamp ① on the vehicle socket remains lit for some time before going out.

Emergency release of the socket flap

If the socket flap cannot be opened due to a malfunction, an emergency release of the socket flap can be performed for the charging process.

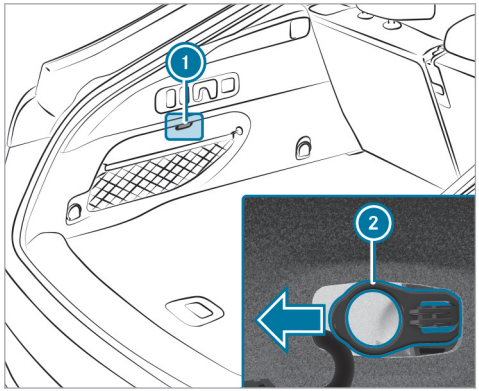

▶ Press in the catch spring of interior lamp ① with a suitable object, e.g. a screwdriver, and carefully prise the interior lamp out of the load compartment trim.

▶ Pull emergency release ② in the direction of the arrow.
The socket flap of the vehicle socket swings open.

- Guide the connecting cables of interior lamp ① back behind the load compartment trim, laterally position interior lamp ① and snap it into the load compartment trim.
- Start the alternating current charging process (→ page 282).

or

- Start the direct current charging process (→ page 286).

Function of the charge level display in the driver display

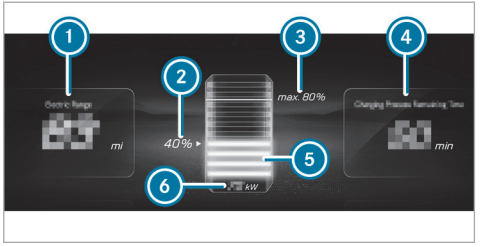

① Remaining range at current charge level
② Current charge level of the high-voltage battery
③ Maximum charge level (as per the setting)
④ Remaining time until fully charged (up to the selected maximum charge level)
⑤ Dynamic charge level display
⑥ Current charging power

ⓘ The indicated remaining range ① may vary due to various factors, e.g.driving style or topography.

When the vehicle is switched off and connected to the mains supply, the driver display shows the charge level display for approximately two minutes.

ⓘ The value of current charging power ⑥ can differ from the display on the charging station.

Mercedes-AMG vehicles: the prediction for the remaining range ① and the maximum state of charge ③ are not displayed.

Parking

Parking the vehicle

⚠ **WARNING** Risk of accident and injury caused by an insufficiently secured vehicle rolling away

If the vehicle is not securely parked sufficiently, it can roll away in an uncontrolled way even at a slight downhill gradient.

- On uphill or downhill gradients, turn the front wheels so that the vehicle rolls towards the curb if it starts moving.

- Apply the parking brake.
- Switch the transmission to position P.

WARNING Risk of fire caused by hot exhaust system parts

Flammable materials such as leaves, grass or twigs may ignite.

- Park the vehicle so that no flammable material can come into contact with hot vehicle components.
- In particular, do not park on dry grassland or harvested grain fields.

WARNING Risk of accident and injury due to children left unattended in the vehicle

If you leave children unattended in the vehicle, they could, in particular:

- open doors, thereby endangering other persons or road users.
- get out and be struck by oncoming traffic.
- operate vehicle equipment and become trapped, for example.

In addition, the children could also set the vehicle in motion by, for example:

- releasing the parking brake.
- changing the gearbox position.
- starting the vehicle.

- Never leave children unattended in the vehicle.
- When leaving the vehicle, always take the key with you and lock the vehicle.
- Keep the key out of reach of children.

NOTE Damage to the vehicle due to it rolling away

- Always secure the vehicle against rolling away.

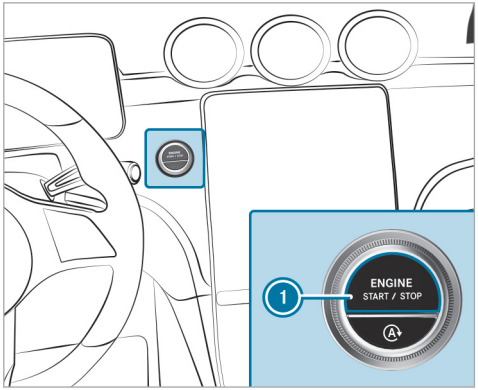

- Bring the vehicle to a standstill by depressing the brake pedal.
- On uphill or downhill gradients, turn the front wheels so that the vehicle rolls towards the curb if it starts moving.
- Apply the electric parking brake.

- ▶ Engage transmission position P in a stationary vehicle with the brake pedal applied (→ page 264).
- ▶ Switch off the vehicle by pressing button ①.
- ▶ Release the service brake slowly.
- ▶ Get out of the vehicle and lock it.

ⓘ When you park the vehicle, you can still operate the side windows and the panoramic sliding sunroof for approximately four minutes if the driver's door is closed.

Automatic vehicle shut-off when locking

Your vehicle is equipped with automatic engine shut-off.

When you leave the vehicle ready to drive, the vehicle will be turned off when locked under the following conditions:

- The ignition is switched on or the engine is running.
- Transmission position P is engaged.
- The driver's door is closed.
- **In addition, one of the following conditions must be fulfilled:**
  - The vehicle is locked using the vehicle key.
  - **Vehicles with KEYLESS-GO:** the vehicle is locked with KEYLESS-GO on the door handle of a closed door.
  - **Vehicles with KEYLESS-GO:** the vehicle is locked via the locking button in the tailgate.

ⓘ The engine will continue to run if the vehicle is not locked as described after it has been left. In this case, switch off the vehicle manually.

Automatic switch-off of the vehicle after a period of time (depending on equipment)

When the engine is running, the following display message appears in the driver's display when leaving the vehicle or after a certain time stopped in transmission position P : Vehicle Ready to Drive Shutdown Occurs When Locked or Automatically in XX Mins

The vehicle will then automatically switch off after a total of 20 minutes of time stopped.

ⓘ To avoid automatic switch-off after the time has elapsed, confirm the corresponding message in the central display of the multimedia system.

In the following cases, the engine continues to run:

- if the vehicle is not locked as described after leaving it
- if the automatic switch-off is not displayed by the display message
- if, once the time has elapsed, the automatic switch-off has been deactivated via the corresponding message in the central display

In this case, switch off the vehicle manually.

Garage door opener

Programming buttons for the garage door opener

⚠ **DANGER** Risk of death caused by exhaust gases

Combustion engines emit poisonous exhaust gases such as carbon monoxide. Inhaling

these exhaust gases is hazardous to health and leads to poisoning.

▶ Never leave the engine or, if present, the auxiliary heating running in an enclosed space without sufficient ventilation.

⚠ **WARNING** Risk of injury by becoming trapped when opening and closing a garage door

When you operate or program a garage door with an integrated garage door opener, persons can become trapped or struck by the garage door if they stand within its range of movement.

▶ Always make sure that nobody is within the range of the garage door's movement.

Only operate the following doors using the garage door opener:

- Doors with a safety stop and reversing feature
- Doors which conform to the current U.S. safety standards

Before programming the garage door opener, park the vehicle outside the garage. Make sure that the vehicle is switched on but not started.

Requirements

- The vehicle has been parked outside the garage or outside the range of movement of the door.
- The vehicle is switched on.
- The vehicle has not been started.

ⓘ The garage door opener function is always available when the vehicle is switched on.

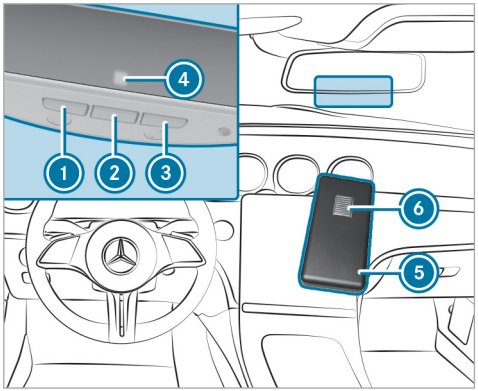

▶ Check if the transmitter frequency of the remote control has the frequency range of 280 to 868 MHz.

Radio equipment approval number:

- NZLMUAHL5 (USA)
- 4112A-MUAHL5 (Canada)

▶ Press and hold button ①, ② or ③ that you wish to program.
Indicator lamp ④ flashes yellow.

ⓘ It can take up to 20 seconds before the indicator lamp flashes yellow.

▶ Release the previously pressed button.
Indicator lamp ④ continues to flash yellow.

▶ Point remote control ⑤ from a distance of 0.4 in (1 cm) to 3 in (8 cm) towards button ①, ② or ③.

▶ Press and hold button ⑥ of remote control ⑤ until one of the following signals appears:
- Indicator lamp ④ lights up green continuously. Programming is complete.
- Indicator lamp ④ flashes green. Programming was successful. Additionally, synchronization of the rolling code with the door system must be carried out.

▶ If indicator lamp ④ does not light up or flash green: repeat the procedure.

▶ Release all of the buttons.

ⓘ The remote control for the door drive is not included in the scope of delivery of the garage door opener.

Synchronizing the rolling code

⚠ **DANGER** Risk of death caused by exhaust gases

Combustion engines emit poisonous exhaust gases such as carbon monoxide. Inhaling these exhaust gases is hazardous to health and leads to poisoning.

▶ Never leave the engine or, if present, the auxiliary heating running in an enclosed space without sufficient ventilation.

⚠ **WARNING** Risk of injury by becoming trapped when opening and closing a garage door

When you operate or program a garage door with an integrated garage door opener, persons can become trapped or struck by the garage door if they stand within its range of movement.

▶ Always make sure that nobody is within the range of the garage door's movement.

Only operate the following doors using the garage door opener:

- Doors with a safety stop and reversing feature
- Doors which conform to the current U.S. safety standards

Before programming the garage door opener, park the vehicle outside the garage. Make sure that the vehicle is switched on but not started.

Requirements

- The door system uses a rolling code.
- The vehicle must be within range of the garage door or door drive.
- The vehicle as well as persons and objects are located outside the range of movement of the door.

ⓘ The garage door opener function is always available when the vehicle is switched on.

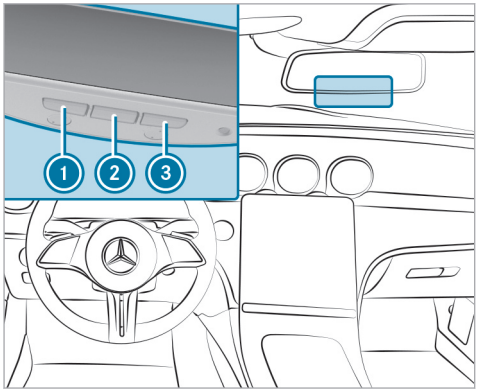

- Press the program button on the door drive unit.
  Initiate the next step within approximately 30 seconds.
- Press previously programmed button 1, 2 or 3 repeatedly until the door closes.
  When the door closes, programming is completed.

ⓘ Please also read the operating instructions for the door drive.

Troubleshooting when programming the remote control

DANGER Risk of death caused by exhaust gases

Combustion engines emit poisonous exhaust gases such as carbon monoxide. Inhaling these exhaust gases is hazardous to health and leads to poisoning.

- Never leave the engine or, if present, the auxiliary heating running in an enclosed space without sufficient ventilation.

WARNING Risk of injury by becoming trapped when opening and closing a garage door

When you operate or program a garage door with an integrated garage door opener, persons can become trapped or struck by the garage door if they stand within its range of movement.

- Always make sure that nobody is within the range of the garage door's movement.

Operate only the following doors using the garage door opener:

- Doors with a safety stop and reversing function
- Doors which conform to the current U.S. safety standards

Before programming the garage door opener, park the vehicle outside the garage. Make sure that the vehicle is switched on but not started.

ⓘ The garage door opener function is always available when the vehicle is switched on.

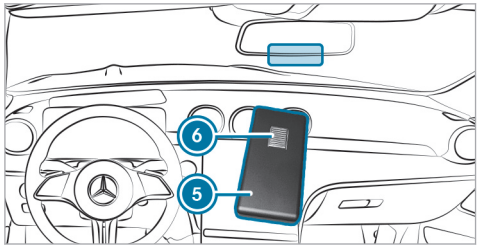

- Check if the transmitter frequency of remote control (5) is supported.
- Replace the batteries in remote control (5).
- Hold remote control (5) at various angles from a distance of 0.4 in (1 cm) to 3 in (8 cm) front of the inside rearview mirror. You should test every position for at least 25 seconds before trying another position.
- Hold remote control (5) at the same angles at various distances in front of the inside rearview mirror. You should test every position for at least 25 seconds before trying another position.
- On remote controls that transmit only for a limited period, press button (6) on remote control (5) again before transmission ends.
- Angle the antenna line of the garage door opener unit toward the remote control.

ⓘ It is possible that older garage doors cannot be operated using the remote control in the inside rearview mirror even after you have successfully performed the measures described above. If this is the case, contact the HomeLink® Hotline.

ⓘ Support and additional information on programming:

- on the toll free HomeLink® Hotline on 1-800-355-3515
- on the Internet at https://www.homelink.com/mercedes

Opening or closing the garage door

DANGER Risk of death caused by exhaust gases

Combustion engines emit poisonous exhaust gases such as carbon monoxide. Inhaling these exhaust gases is hazardous to health and leads to poisoning.

- Never leave the engine or, if present, the auxiliary heating running in an enclosed space without sufficient ventilation.

WARNING Risk of injury by becoming trapped when opening and closing a garage door

When you operate or program a garage door with an integrated garage door opener, persons can become trapped or struck by the garage door if they stand within its range of movement.

- Always make sure that nobody is within the range of the garage door's movement.

Only operate the following doors using the garage door opener:

- Doors with a safety stop and reversing feature
- Doors which conform to the current U.S. safety standards

Before programming the garage door opener, park the vehicle outside the garage. Make sure that the vehicle is switched on but not started.

Requirements

- The corresponding button is programmed to operate the door.

ⓘ The garage door opener function is always available when the vehicle is switched on.

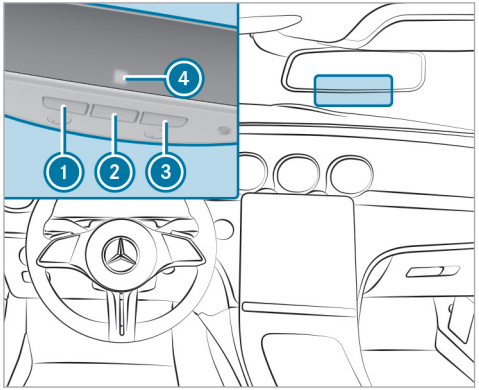

▶ Press and hold buttons ①, ② or ③ until the door opens or closes.

▶ If the indicator lamp ④ flashes yellow after approx. 20 seconds: Press the previously pressed button again and keep it pressed until the door opens or closes.

Clearing the garage door opener memory

⚠ **DANGER** Risk of death caused by exhaust gases

Combustion engines emit poisonous exhaust gases such as carbon monoxide. Inhaling these exhaust gases is hazardous to health and leads to poisoning.

▶ Never leave the engine or, if present, the auxiliary heating running in an enclosed space without sufficient ventilation.

⚠ **WARNING** Risk of injury by becoming trapped when opening and closing a garage door

When you operate or program a garage door with an integrated garage door opener, persons can become trapped or struck by the garage door if they stand within its range of movement.

▶ Always make sure that nobody is within the range of the garage door's movement.

Only operate the following doors using the garage door opener:

- Doors with a safety stop and reversing feature
- Doors which conform to the current U.S. safety standards

Before programming the garage door opener, park the vehicle outside the garage. Make sure that the vehicle is switched on but not started.

ⓘ The garage door opener function is always available when the vehicle is switched on.

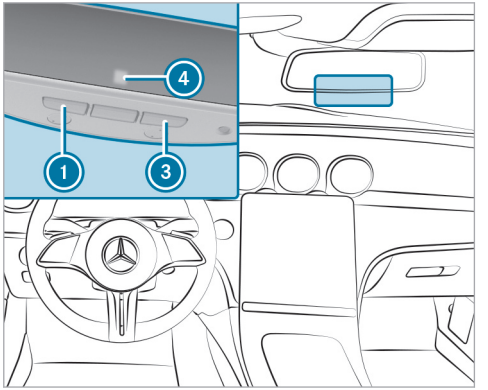

▶ Press and hold buttons ① and ③. Indicator lamp ④ lights up yellow.

▶ If indicator lamp ④ flashes green: release buttons ① and ③. The entire memory has been deleted.

Electric parking brake

Function of the electric parking brake (applying automatically)

⚠ **WARNING** Risk of accident and injury due to children left unattended in the vehicle

If you leave children unattended in the vehicle, they could, in particular:

- open doors, thereby endangering other persons or road users.
- get out and be struck by oncoming traffic.
- operate vehicle equipment and become trapped, for example.

In addition, the children could also set the vehicle in motion by, for example:

- releasing the parking brake.
- changing the gearbox position.
- starting the vehicle.

▶ Never leave children unattended in the vehicle.

▶ When leaving the vehicle, always take the key with you and lock the vehicle.
▶ Keep the key out of reach of children.

The electric parking brake is applied if the transmission is in position P and one of the following conditions is fulfilled:

- The vehicle is switched off.
- The seat belt tongue is not inserted in the seat belt buckle of the driver's seat and the driver's door is opened.

ⓘ To prevent application: pull the handle of the electric parking brake (→ page 300).

In the following situations, the electric parking brake is also applied:

- The HOLD function is keeping the vehicle stationary.
- Active Parking Assist is keeping the vehicle stationary.
- Active Distance Assist DISTRONIC is bringing the vehicle to a standstill.
- **In addition, one of the following conditions must be fulfilled:**
  - The vehicle is switched off.
  - The seat belt tongue is not inserted in the seat belt buckle of the driver's seat and the driver's door is opened.
  - There is a system malfunction.
  - The power supply is insufficient.
  - The vehicle is stationary for a lengthy period.

When the electric parking brake is applied, the red PARK (USA) or (P) (Canada) indicator lamp lights up in the driver's display.

ⓘ The electric parking brake is not automatically applied if the vehicle is switched off by the ECO start/stop function.

Function of the electric parking brake (releasing automatically)

The electric parking brake is released when the following conditions are fulfilled:

- The driver's door is closed.
- The vehicle has been started.
- The transmission is in position D or R and you depress the accelerator pedal or you shift from transmission position P to D or R when on level ground.
- If the transmission is in position R, the tailgate must be closed.
- The seat belt tongue is inserted into the seat belt buckle of the driver's seat.

  If the seat belt tongue is not inserted into the seat belt buckle of the driver's seat, one of the following conditions must be fulfilled:
  - You shift from transmission position P.

    or
  - You have previously driven at speeds greater than 2 mph (3 km/h).

When the electric parking brake is released, the red PARK (USA) or (P) (Canada) indicator lamp in the driver's display goes out.

Applying/releasing the electric parking brake manually

WARNING Risk of accident and injury due to children left unattended in the vehicle

If you leave children unattended in the vehicle, they could, in particular:

- open doors, thereby endangering other persons or road users.
- get out and be struck by oncoming traffic.
- operate vehicle equipment and become trapped, for example.

In addition, the children could also set the vehicle in motion by, for example:

- releasing the parking brake.
- changing the gearbox position.
- starting the vehicle.

▶ Never leave children unattended in the vehicle.

▶ When leaving the vehicle, always take the key with you and lock the vehicle.

▶ Keep the key out of reach of children.

Applying

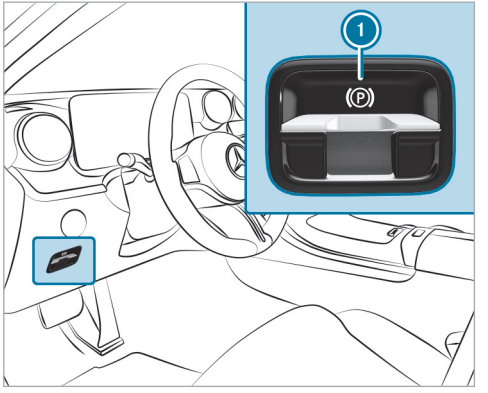

▶ Push handle ①.
The red PARK (USA) or (P) (Canada) indicator lamp lights up in the driver's display.

ⓘ The electric parking brake is only securely applied if the red PARK (USA) or (P) (Canada) indicator lamp is lit continuously.

Releasing

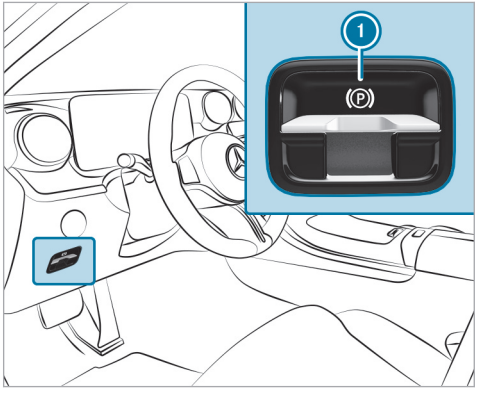

▶ Switch on the vehicle.

▶ Pull handle ①.
The red PARK (USA) or (P) (Canada) indicator lamp in the driver's display goes out.

Emergency braking

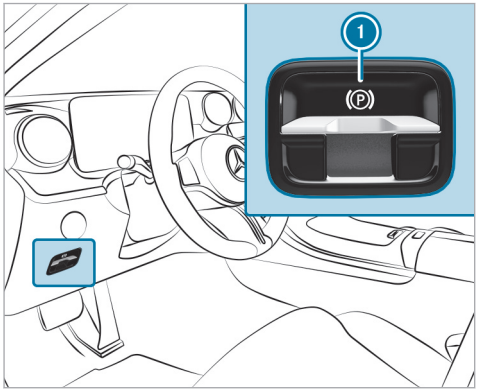

▶ Press and hold handle ①.
As long as the vehicle is in motion, the Release Parking Brake message is displayed and the red PARK (USA) or (Ⓟ) (Canada) indicator lamp flashes.

When the vehicle has been braked to a standstill, the electric parking brake is applied. The red PARK (USA) or (Ⓟ) (Canada) indicator lamp lights up in the driver's display.

Information on collision detection on a parked vehicle

If a collision is detected on the locked vehicle when the tow-away alarm is activated and collision detection is switched on, you will receive a message in the multimedia system when the vehicle is switched on.

You will receive information about the following points:

- The area of the vehicle that may have been damaged.
- The force of the impact.

The following situation can lead to inadvertent activation:

- The parked vehicle is moved, for example, in a two-story garage.

ⓘ Deactivate the tow-away alarm in order to prevent inadvertent activation. If you deactivate the tow-away alarm, collision detection will also be deactivated.
You can permanently deactivate collision detection via the multimedia system (→ page 302).

ⓘ If the battery is severely discharged, the function for detecting a collision on a parked vehicle is automatically deactivated to facilitate the next engine start.

System limits

Detection may be restricted in the following situations:

- the vehicle is damaged without impact, for example, if an outside mirror is torn off or the paint is damaged by a key
- an impact occurs at low speed
- the electric parking brake is not applied

ⓘ You are responsible for your vehicle. Convince yourself that your vehicle is free of damage and roadworthy.

Setting collision detection for a parked vehicle

Multimedia system:

⟶ [⌂] ▸▸ Settings ▸▸ Vehicle ▸▸ Open/Close ▸▸ Vehicle Protection

▶ Activate or deactivate the function via Collision Notification.

ⓘ A maximum of three incidents can be registered. Up to 15 photos are taken for every incident. In the event of another incident, the photos of the first incident will be overwritten if they have not been deleted already.

Activating or deactivating the collision photos function

Please note that legal restrictions regarding automatic recording of the vehicle surroundings may be in place in certain countries.

▶ Activate or deactivate Collision Photos.

Transferring the collision photos with the Mercedes me app

▶ Select Upload Collision Photos.

or

▶ Select Upload Automatically.

▶ Scan the generated QR code on the central display with the Mercedes me app.
The encrypted collision photos will then be uploaded to Mercedes me.

ⓘ Any device that can scan QR codes can be used to view the collision photos in the Mercedes me app.

Copying the collision photos to a USB flash drive

▶ Connect a USB flash drive (⟶ page 542).

▶ Select Manage Collision Photos.

▶ Select Copy (USB).
All collision photos are copied to the USB flash drive.

ⓘ Use only FAT32 or exFAT-formatted USB storage devices to ensure secure operation.

Deleting collision photos

▶ Select Manage Collision Photos.

▶ Select Delete.
All collision photos are deleted.

Notes on parking the vehicle for an extended period

If you leave the vehicle parked for longer than six weeks, it may suffer damage through disuse.

The 12 V battery may also be impaired or damaged by heavy discharging.

ⓘ Further information can be obtained at a qualified specialist workshop.

Standby mode (extension of the starter battery's period out of use)

Standby mode function

ⓘ This function is not available for all models.

If standby mode is activated, energy loss will be minimized during extended periods of non-operation.

Standby mode is characterized by the following:

- The starter battery is preserved.
- The maximum non-operational time appears in the driver's display.

- The connection to online services is interrupted.

If the following conditions are fulfilled, standby mode can be activated or deactivated using the multimedia system:

- The vehicle is switched on.
- The vehicle has not been started.

Exceeding the vehicle's displayed non-operational time may cause inconvenience; i.e. it cannot be guaranteed that the starter battery will reliably start the vehicle.

Charge the starter battery in the following situations:

- The vehicle's non-operational time has to be extended.
- The starter battery charge level is insufficient for standby mode.

ⓘ Standby mode is automatically deactivated when the vehicle is switched on.

Activating/deactivating standby mode (parking up the vehicle)

Requirements

- The power supply is switched on.
- The vehicle is not switched on.

Multimedia system:

→ [⌂] ▸▸ Settings ▸▸ Vehicle ▸▸ Other Functions

▶ Activate or deactivate Standby Mode.

Driving and driving safety systems

Driving systems and your responsibility

Your vehicle is equipped with driving systems that assist you in driving, parking and maneuvering the vehicle. The driving systems are only aids. They are not a substitute for you paying attention to your surroundings and do not relieve you of your responsibility pertaining to road traffic law. The driver is always responsible for maintaining a safe distance to the vehicle in front, for vehicle speed, for braking in good time and for staying in lane.

Pay attention to the traffic conditions at all times and intervene when necessary. Be aware of the limitations regarding the safe use of these systems.

Driving systems can neither reduce the risk of an accident if you fail to adapt your driving style nor override the laws of physics. They cannot always take into account road, weather or traffic conditions.

ⓘ Some driving systems can regulate or limit the speed to a previously set value. Draw attention to the stored speed when changing drivers.

Information on vehicle sensors and cameras

Some driving and driving safety systems use cameras as well as radar or ultrasonic sensors to monitor the area in front of, behind or next to the vehicle.

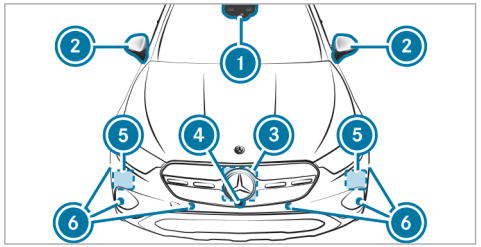

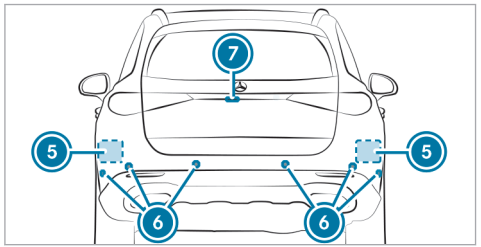

1. Multifunction camera
2. Cameras in the outside mirrors
3. Front radar
4. Front camera
5. Corner radars
6. Ultrasonic sensors
7. Rear view camera

> ⚠ **WARNING** Risk of accident due to restricted detection performance of vehicle sensors and cameras
>
> If the area around vehicle sensors or cameras is covered, damaged or dirty, certain driving and safety systems cannot function correctly. There is a risk of an accident.
>
> ▶ Keep the area around vehicle sensors or cameras clear of any obstructions and clean.
>
> ▶ Have damage to the bumper, radiator grille or stone chipping in the area of the front and rear windows repaired at a qualified specialist workshop.

In particular, keep the areas around the sensors and cameras free of dirt, ice or slush (→ page 570). The sensors and cameras must not be covered and the detection ranges around them must be kept free. Do not attach additional license plate brackets, advertisements, stickers or foils – including those that protect against stone chippings – in the detection range of the sensors and cameras. Make sure that there are no overhanging loads protruding into the detection range.

If there is damage to a bumper or the radiator grille, or after an impact, have the function of the sensors checked at a qualified specialist workshop. Have damage or stone chipping in the area of the cameras on the windshield and rear window repaired at a qualified specialist workshop.

ⓘ The rear view camera can extend and retract automatically for the purpose of calibration, even though there is no camera image in the display.

Overview of driving systems and driving safety systems

- ABS (→ page 305)
- BAS (→ page 306)
- ESP® (→ page 306)
- ESP® (Mercedes-AMG vehicles) (→ page 307)

- ESP® Crosswind Assist (→ page 309)
- ESP® trailer stabilization (→ page 310)
- EBD (→ page 312)
- STEER CONTROL (→ page 312)
- HOLD function (→ page 312)
- Hill Start Assist (→ page 313)
- Valet Service Mode (→ page 314)
- Beginner Driver Mode (→ page 314)
- ATTENTION ASSIST (→ page 315)
- Cruise control (→ page 316)
- Traffic Sign Assist (→ page 342)
- AMG RIDE CONTROL (→ page 353)
- AMG ACTIVE RIDE CONTROL (→ page 354)
- RACE START (→ page 355)

Driving Assistance Package

ⓘ The availability of some functions or partial functions of the Driving Assistance Package depends on the equipment or country. The functions of your Driving Assistance Package may differ from the functions listed here.

The functions Active Distance Assist DISTRONIC, Active Blind Spot Assist, Active Brake Assist, Active Lane Keeping Assist and Active Emergency Stop Assist are, with restricted functions, also available without Driving Assistance Package.

- Active Distance Assist DISTRONIC (→ page 318)
- Active Speed Limit Assist (→ page 324)
- Route-based speed adaptation (→ page 325)
- DSR (→ page 327)
- Active Brake Assist (→ page 337)
- Active Steering Assist (→ page 329)
- Active Emergency Stop Assist (→ page 331)
- Active Lane Change Assist (→ page 333)
- Active Stop-and-Go Assist (→ page 327)
- Blind Spot Assist and Active Blind Spot Assist with exit warning (→ page 347)
- Active Lane Keeping Assist (→ page 350)
- PRE-SAFE® Impulse Side (→ page 103)

Parking Package

ⓘ The availability of individual functions depends on country and equipment.

- Rear-view camera (→ page 357)
- 360° Camera (→ page 359)
- Parking Assist PARKTRONIC (→ page 366)
- Active Parking Assist (→ page 369)
- Memory Parking Assist (→ page 379)
- Trailer Maneuvering Assist (→ page 383)

Function of ABS

The Anti-lock Brake System (ABS) regulates the brake pressure in critical driving situations:

- During braking, for instance, at maximum full-stop braking or if there is insufficient tire traction, the wheels are prevented from locking.
- Vehicle steerability while braking is ensured.

If ABS intervenes when braking, you will feel a pulsing in the brake pedal. The pulsating brake pedal can be an indication of hazardous road con-

ditions and can serve as a reminder to take extra care while driving.

System limits

- ABS is active from speeds of approx. 3 mph (5 km/h).
- ABS may be impaired or may not function if a malfunction has occurred and the yellow ABS warning lamp lights up continuously after the vehicle is started.

Function of off-road ABS

ⓘ Off-road ABS is activated automatically when you select the drive program.

Off-road ABS is specially adapted for driving off-road:

- The front wheels lock cyclically during braking.
- The braking distance is shortened due to the digging-in effect.

System limits

- Off-road ABS functions at speeds below 25 mph (40 km/h).
- If off-road ABS intervenes, the ability to steer may be restricted.

Function of BAS

⚠ **WARNING** Risk of an accident caused by a malfunction in BAS (Brake Assist System)

If BAS is malfunctioning, the braking distance in an emergency braking situation is increased.

▶ Depress the brake pedal with full force in emergency braking situations. ABS prevents the wheels from locking.

The Brake Assist System (BAS) supports your emergency braking situation with additional brake force.

If you depress the brake pedal quickly, BAS is activated:

- BAS automatically boosts the brake pressure.
- BAS can shorten the braking distance.
- ABS prevents the wheels from locking.

The brakes will function as usual once you release the brake pedal. BAS is deactivated.

Function of ESP®

⚠ **WARNING** Risk of skidding if ESP® is deactivated

If you deactivate ESP®, ESP® cannot carry out vehicle stabilization.

▶ ESP® should only be deactivated in the following situations.

The Electronic Stability Program (ESP®) can monitor and improve driving stability and traction in the following situations within physical limits:

- When you pull away on wet or slippery road surfaces.
- When braking.

If the vehicle deviates from the direction desired by the driver, ESP® can stabilize the vehicle by intervening in the following ways:

- One or more wheels are braked.

- The engine output is adapted according to the situation.

When ESP® is deactivated, the warning lamp lights up continuously:

- Driving stability will no longer be improved.
- The drive wheels could spin.
- ETS/4ETS traction control is still active.

ⓘ When ESP® is deactivated, you are still assisted by ESP® when braking.

When the warning lamp flashes, one or more wheels have reached their grip limit:

- Adapt your driving style to suit the current road and weather conditions.
- Do not deactivate ESP®.
- Only depress the accelerator pedal as far as is necessary when pulling away.

Deactivate ESP® in the following situations to improve traction:

- When using snow chains.
- In deep snow.
- On sand or gravel.

ⓘ Spinning the wheels results in a cutting action, which enhances traction.

If the warning lamp lights up continuously, ESP® is not available due to a malfunction.

Observe the following information:

- Warning and indicator lamps (→ page 864)
- Display messages (→ page 777)

ETS/4ETS

ETS/4ETS (Electronic Traction System) traction control is part of ESP® and makes it possible to pull away and accelerate on slippery roads.

If you select the drive program, a special ETS/4ETS system specifically suited to off-road terrain will automatically be activated.

ETS/4ETS can improve the vehicle's traction by intervening in the following ways:

- The drive wheels are braked individually if they spin.
- More drive torque is transferred to the wheel or wheels with traction.

Influence of drive programs on ESP®

The drive programs enable ESP® to adapt to different weather and road conditions as well as the driver's preferred driving style. Depending on the selected drive program, the appropriate ESP® mode will be activated (→ page 257, 258).

Function of ESP® (Mercedes-AMG vehicles)

You can choose between the following modes of the Electronic Stability Program (ESP®):

- ESP® ON
- ESP® SPORT
- ESP® OFF

Characteristics when ESP® is activated

ESP® monitors and improves driving stability and traction, particularly in the following situations:

- When you pull away on wet or slippery road surfaces.
- When you brake.

- **Vehicles with trailer hitch:** in trailer operation from a speed of 40 mph (65 km/h), if the vehicle/trailer combination begins to sway from side to side.
- When there is a strong crosswind and the vehicle's speed is between approximately 50 mph (80 km/h) and 125 mph (200 km/h)

ESP® can stabilize the vehicle by intervening in the following ways:

- Applying the brakes to one or more wheels
- Adapting the engine output according to the situation
- Adapting drive system output depending on the situation

ESP® will be activated every time the vehicle is started, regardless of whether ESP® SPORT or ESP® OFF was selected before the vehicle was switched off.

When the warning lamp flashes, one or more wheels have reached their grip limit:

- Adapt your driving style to suit the prevailing road and weather conditions.
- Do not deactivate ESP® under any circumstances.
- Depress the accelerator pedal only as far as necessary when pulling away.

Characteristics of ESP® SPORT

WARNING Risk of skidding if ESP® SPORT is used incorrectly

When you activate ESP® SPORT, there is an increased risk of skidding and having an accident.

▶ Activate ESP® SPORT only in the circumstances described below.

When ESP® SPORT is selected, the OFF and ESP SPORT warning lamps will light up continuously.

Select ESP® SPORT when the vehicle's own oversteer and understeer characteristics are desired, e.g. on cordoned-off roads.

Driving with ESP® SPORT or with ESP® deactivated requires an extremely skilled and experienced driver.

If ESP® SPORT is activated and one or more wheels start to spin, the warning lamp will flash. ESP® then only stabilizes the vehicle to a limited degree.

ESP® SPORT also has the following characteristics:

- ESP® only improves driving stability to a limited degree.
- ETS/4ETS traction control is still active.
- The engine's torque is only restricted to a limited degree and the drive wheels can spin.

  The power of the drive system is only restricted slightly according to the situation and the drive wheels can spin.

  The spinning of the wheels results in a cutting action for better traction on loose surfaces.
- ESP® continues to provide assistance when the brakes are firmly applied.
- **Vehicles with trailer hitch:** stabilization of the vehicle/trailer combination is no longer active.
- Crosswind Assist is no longer active.

Characteristics when ESP® is deactivated

WARNING Risk of skidding if ESP® is deactivated

If you deactivate ESP®, ESP® cannot carry out vehicle stabilization.

▶ ESP® should only be deactivated in the following situations.

When ESP® is deactivated, the [OFF] and [ESP OFF] warning lamps will light up continuously.

Deactivating ESP® has the following effects:

- Driving stability will no longer be improved.
- The drive wheels could spin.
- ETS/4ETS traction control will still be active.
- **Vehicles with trailer hitch:** stabilization of the vehicle/trailer combination will no longer be active.
- Crosswind Assist will no longer be active.

ⓘ Even when ESP® is deactivated, you will still be assisted by ESP® when braking hard.

It may be best to activate ESP® SPORT or deactivate ESP® in the following situations:

- When using snow chains.
- In deep snow.
- On sand or gravel.

ⓘ Spinning the wheels will cause them to dig in to the surface, thereby enhancing traction.

ⓘ Activate ESP® as soon as the situations described above no longer apply. ESP® will otherwise not be able to stabilize the vehicle if the vehicle starts to skid or a wheel starts to spin.

If the [ESP] warning lamp lights up continuously, ESP® is not available due to a malfunction.

Observe the display messages and warning and indicator lamps that are shown.

- Warning and indicator lamps (→ page 864)
- Display messages (→ page 777)

ETS/4ETS (Electronic Traction System)

ETS/4ETS traction control is part of ESP®.

ETS/4ETS can improve the vehicle's traction by intervening in the following ways:

- The brakes will be applied to the drive wheels individually if they spin.
- More drive torque will be transferred to the wheel or wheels with traction.

Function of ESP® Crosswind Assist

ESP® Crosswind Assist detects sudden gusts of side wind and helps the driver to keep the vehicle in the lane:

- ESP® Crosswind Assist operates at vehicle speeds between approximately 50 mph (80 km/h) and 125 mph (200 km/h) when you are driving straight ahead or cornering slightly.
- The system stabilizes the vehicle by applying the brakes to specific wheels on one side.

Function of ESP® trailer stabilization

WARNING Risk of accident in poor road and weather conditions

In poor road and weather conditions, the trailer stabilization cannot prevent lurching of the vehicle/trailer combination. Trailers with a high center of gravity may tip over before ESP® detects this.

▶ Always adapt your driving style to suit the current road and weather conditions.

When you are driving with a trailer, ESP® can stabilize your vehicle if the trailer begins to swerve from side to side:

- ESP® trailer stabilization will be active at speeds above 40 mph (65 km/h).
- Slight swerving is reduced by means of a targeted, individual brake application on one side.
- In the event of severe swerving, the operating energy output will also be reduced and the brakes will be applied to all wheels.

ESP® trailer stabilization may be impaired or may not function if:

- The trailer is not connected correctly or is not detected properly by the vehicle.

Activating/deactivating ESP® (Electronic Stability Program)

Multimedia system:

▶ Select ESP.

▶ Select On or Off.

ESP® is deactivated if the ESP® OFF warning lamp lights up continuously on the driver's display.

Observe any information on warning lamps and display messages which may be shown on the driver's display.

Setting ESP® with the steering-wheel button

ⓘ You can also adjust ESP® via the multimedia system (→ page 311).

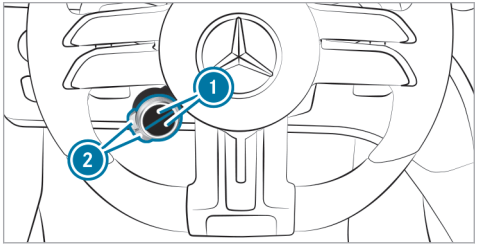

▶ **To set ESP®:** press upper or lower display button 1 repeatedly, until it shows the symbol.

ⓘ If the display button does not show the symbol, then it is hidden. How functions are displayed and the order in which they are displayed can be set in the multimedia system (→ page 253).

The color of the road in the [ESP OFF] button symbol indicates the current setting:

- [ESP OFF] (blue): ESP® ON
- [ESP OFF] (yellow): ESP® SPORT
- [ESP OFF] (red): ESP® OFF

▶ **To set ESP® SPORT:** briefly press button ② when ESP® is activated.
The road in the [ESP OFF] button symbol will light up yellow.

The [ESP OFF] and [ESP SPORT] warning lamps will appear on the driver's display.

▶ **To deactivate ESP®:** select ESP® SPORT and then press and hold button ②.
The road in the [ESP OFF] button symbol will light up red.

The [ESP OFF] and [ESP OFF] warning lamps will appear on the driver's display.

ⓘ When you deactivate ESP® [ESP OFF] in the [drive program] drive program, AMG Dynamics will automatically switch to the **Master** level.

▶ **To activate ESP®:** briefly press button ② when ESP® SPORT is selected or ESP® is deactivated.
The road in the [ESP OFF] button symbol will light up blue.

The [ESP OFF] and [ESP SPORT] or [ESP OFF] warning lamps will go out.

When the [car] symbol is shown with a red **!** on the display button, ESP® is malfunctioning. Observe the information on warning lamps and display messages that are shown on the driver's display.

Setting ESP® in the multimedia system

Multimedia system:

→ [⌂] ▸▸ Settings ▸▸ Vehicle ▸▸ DYNAMIC SELECT

ESP will always be activated when the vehicle is started. The road in the [ESP OFF] button symbol lights up blue.

▶ **To set ESP SPORT:** when ESP is activated, briefly press [ESP OFF] to change to the Sport program.
The road in the [ESP OFF] button symbol lights up yellow.

▶ **To deactivate ESP:** set the ESP SPORT program and press and hold [ESP OFF] to deactivate ESP.
The road in the [ESP OFF] button symbol lights up red. The [ESP OFF] and [ESP OFF] warning lamps appear on the driver's display.

▶ **To activate ESP:** briefly press [ESP OFF] in ESP SPORT or if ESP is deactivated.
The road in the [ESP OFF] button symbol lights up blue.

The [ESP OFF] and [ESP SPORT] or [ESP OFF] warning lamps go out.

ⓘ You can also set ESP via the steering-wheel buttons (→ page 310).

Function of EBD

Electronic Brakeforce Distribution (EBD) is characterized by the following:

- Monitoring and regulating the brake pressure on the rear wheels.
- Improved driving stability when braking, especially on bends.

Function of STEER CONTROL

STEER CONTROL assists you by transmitting a noticeable steering force to the steering wheel in the direction required for vehicle stabilization.

This steering recommendation is given in the following situations:

- both right wheels or both left wheels are on a wet or slippery road surface when you brake
- the vehicle starts to skid

Mercedes-AMG vehicles: If you brake and both right wheels or both left wheels are on a wet or slippery road surface, you will receive a steering recommendation. There will be no steering recommendation if the vehicle is skidding.

System limits

STEER CONTROL may be impaired or may not function in the following situations:

- ESP® is deactivated.
- ESP® is malfunctioning.
- The steering is malfunctioning.

If ESP® is malfunctioning, you will be assisted further by the power steering.

HOLD function

HOLD function

The HOLD function holds the vehicle at a standstill without requiring you to depress the brake pedal, e.g. while waiting in traffic.

The HOLD function is only an aid. The responsibility for the vehicle safely standing still remains with the driver.

System limits

The HOLD function is only intended to provide assistance when driving and is not a sufficient means of safeguarding the vehicle against rolling away when stationary.

- The incline must not be greater than 30%.

Activating/deactivating the HOLD function

⚠ **WARNING** Risk of an accident due to the HOLD function being active when you leave the vehicle

If the vehicle is only braked with the HOLD function it could, in the following situations, roll away:

- If there is a malfunction in the system or in the power supply.
- If the HOLD function is deactivated by depressing the accelerator pedal or brake pedal, e.g. by a vehicle occupant.

▶ Always secure the vehicle against rolling away before you leave it.

Requirements

- The vehicle is stationary.
- The driver's door is closed or the seat belt on the driver's side is fastened.
- The vehicle has been started or has been automatically switched off by the ECO start/stop function.
- The electric parking brake is released.
- Active Distance Assist DISTRONIC is deactivated.
- The transmission is in position D, R or N.

Activating the HOLD function

▶ Depress the brake pedal, and after a short time quickly depress further until the HOLD display appears in the driver's display.

▶ Release the brake pedal.

Deactivating the HOLD function

▶ Depress the accelerator pedal to pull away.

or

▶ Depress the brake pedal until the HOLD display disappears from the driver's display.

The HOLD function is deactivated in the following situations:

- Active Distance Assist DISTRONIC is activated.
- The transmission is shifted to position P.
- The vehicle is secured with the electric parking brake.

In the following situations, the vehicle is held by transmission position P and/or by the electric parking brake:

- The seat belt is unfastened and the driver's door is opened.
- The vehicle is switched off.
- There is a system malfunction.
- The power supply is insufficient.

In addition, the Brake Immediately message may appear in the driver's display and a horn tone may sound at regular intervals.

▶ Immediately depress the brake pedal firmly until the warning message disappears. The HOLD function is deactivated.

▶ Additionally secure the vehicle against rolling away.

Function of Hill Start Assist

WARNING Risk of accident and injury due to the vehicle rolling away

After a short time, Hill Start Assist no longer holds the vehicle.

▶ Swiftly move your foot from the brake pedal to the accelerator pedal. Do not leave the vehicle when it is being held by Hill Start Assist.

Hill Start Assist will hold the vehicle for a short time when you pull away on a hill in the following circumstances:

- The transmission is in position D or R.
- The electric parking brake is released.

This will give you enough time to move your foot from the brake pedal to the accelerator pedal and depress it before the vehicle begins to roll away.

Valet service mode

Function of the valet service mode

ⓘ This function is an on-demand feature (→ page 77).

In valet service mode, the vehicle acceleration is limited to reduce the risk of damage to and improper use of the vehicle when it is handed over to third parties.

Valet service mode is characterized by the following:

- Power output is reduced.
- In principle, a maximum speed of 81 mph (130 km/h) can be reached.
- The sporty drive programs and the [I*] drive program are not available.
- ESP® cannot be deactivated.
- Profiles that are still logged in are logged out and unprotected profiles are secured.

Switch valet service mode on or off

Requirements

- For activation: the vehicle is at a standstill.
- For deactivation: the park position [P] is selected.

Multimedia system:

→ [⌂] ▸▸ Apps ▸▸ Valet service mode

▶ Activate or deactivate the function.
If the valet service mode is activated an indicator lamp lights up in the driver display.

ⓘ Alternatively the valet service mode can be switched on or off via the Mercedes me connect App.
Further information on Mercedes me connect (→ page 524)

ⓘ The valet service mode is only protected against deactivation by a third party in conjunction with Mercedes me connect. If the vehicle is linked to Mercedes me connect, only the profile that has activated the mode or the specified main user can deactivate it again.

ⓘ The valet service mode remains active in case of a profile change or if the vehicle is switched on or off and must be consciously switched off by the authorized users.

Beginner driver mode

Function of the beginner driver mode

ⓘ This function is an on-demand feature (→ page 77).

In beginner driver mode, the vehicle acceleration is limited to increase safety for inexperienced drivers.

Beginner driver mode is characterized by the following:

- Power output is reduced.
- In principle, a maximum speed of 81 mph (130 km/h) can be reached.
- The sporty drive programs and the [I*] drive program are not available.
- ESP® cannot be deactivated.

Switch Beginner Driver Mode on or off

Requirements

- For activation: the vehicle is at a standstill.
- For deactivation: the park position [P] is selected.

Multimedia system:

→ ⌂ ▸▸ Apps ▸▸ Beginner Driver Mode

▶ Activate or deactivate the function.
If Beginner Driver Mode is activated an indicator lamp lights up in the driver display.

ⓘ Alternatively, Beginner Driver Mode can be switched on or off via the Mercedes me connect App.
Further information on Mercedes me connect (→ page 524)

ⓘ Beginner Driver Mode is protected against deactivation by a third party only in conjunction with Mercedes me connect. If the vehicle is linked to Mercedes me connect, only the profile that has activated the mode or the specified main user can deactivate it again.

ⓘ Beginner Driver Mode remains active in case of a profile change or if the vehicle is switched on or off and must be consciously switched off by the authorized users.

ATTENTION ASSIST

Function of ATTENTION ASSIST

ATTENTION ASSIST helps you on long, monotonous journeys, e.g. on highways and trunk roads. If indicators of fatigue or increasing lapses in concentration on the part of the driver are detected, the system will suggest taking a break.

ATTENTION ASSIST is only an aid. It cannot always detect fatigue or lapses in concentration in time. The system is not a substitute for a well-rested and attentive driver. On long journeys, take regular breaks in good time that allow for adequate recuperation.

You can choose between two settings:

- **Standard:** normal system sensitivity.
- **Sensitive:** higher system sensitivity. The driver is warned earlier and the attention level detected by ATTENTION ASSIST is adapted accordingly.

If drowsiness or increasing lapses in concentration are detected, the ATTENTION ASSIST: Take a Break! warning appears on the driver's display. You can acknowledge the message and take a break where necessary. If you do not take a break and ATTENTION ASSIST continues to detect increasing lapses in concentration, you will be warned again after a minimum of 15 minutes.

The following information is displayed on the driver's display:

- The length of the journey since the last break
- The attention level determined by ATTENTION ASSIST.

The more segments ① of the circle displayed, the higher the detected attention level. Fewer segments ① are displayed in the circle as the attention level decreases.

If ATTENTION ASSIST is unable to calculate the attention level and cannot issue a warning, the System Suspended message appears.

If a warning is shown on the driver's display, the MBUX multimedia system offers to search for a rest area. You can select a rest area and start navigation to this rest area.

When you restart the vehicle, ATTENTION ASSIST is automatically switched on. The last selected sensitivity level remains stored.

System limits

ATTENTION ASSIST is active in the speed range between 37 mph (60 km/h) and 124 mph (200 km/h).

If the system is not available due to a fault, the ATTENTION ASSIST warning lamp will light up permanently on the driver's display

Particularly in the following situations, ATTENTION ASSIST only functions in a restricted manner and warnings may be delayed or not occur:

- If you have been driving for less than approximately 30 minutes.
- If the road condition is poor (uneven road surface or potholes).
- If there is a strong crosswind.
- If you adopt a sporty driving style (high cornering speeds or high rates of acceleration).
- If the Steering Assist function of Active Distance Assist DISTRONIC is active.
- If the clock is set to the incorrect time.
- If you change lanes and vary your speed frequently in active driving situations.

Also observe any information regarding display messages that may be displayed on the driver's display.

The ATTENTION ASSIST drowsiness or alertness assessment is reset and restarted when continuing the journey in the following situations:

- You switch off the vehicle.
- You unfasten your seat belt and open the driver's door (e.g. to change drivers or take a break).

Setting ATTENTION ASSIST

Multimedia system:

→ ⌂ ▸▸ Settings ▸▸ Assistance ▸▸ Assistance ▸▸ ATTENTION ASSIST

Setting the sensitivity

▶ Select ⚙ next to ATTENTION ASSIST.

▶ Select Standard or Sensitive.

Speed control cruise control

Function of cruise control

Cruise control regulates the speed to the value selected by the driver.

If you accelerate to overtake, for example, the stored speed is not deleted. If you remove your foot from the accelerator pedal after overtaking, cruise control will resume speed regulation back to the stored speed.

You can store any speed from 15 mph (20 km/h) up to the maximum design speed.

Observe the notes on driving systems and your responsibility; you may otherwise fail to recognize dangers (→ page 303).

Mercedes-AMG vehicles: cruise control is available up to a maximum speed of 155 mph (250 km/h).

Displays on the driver's display

Gray: cruise control is selected but not yet active, or temporarily passive.

Green: cruise control is active.

A stored speed is shown under the display and is indicated in the speedometer.

System limits

Cruise control may be unable to maintain the stored speed on uphill gradients. The stored speed is resumed when the gradient evens out.

Change to a lower gear in good time for long and steep downhill gradients. Take particular note of this when driving a laden vehicle. By doing so, you will make use of the braking effect of the engine. This relieves the load on the brake system and prevents the brakes from overheating and wearing too quickly.

Do not use cruise control in the following situations:

- In traffic situations which require frequent changes of speed, e.g. in heavy traffic, on winding roads
- On slippery roads. Accelerating can cause the drive wheels to lose traction and the vehicle could then skid.
- When visibility is poor

Operating cruise control

WARNING Risk of accident due to stored speed

If you call up the stored speed and this is lower than your current speed, the vehicle decelerates.

▶ Take into account the traffic situation before calling up the stored speed.

Requirements

- Cruise control is selected.
- ESP® must be activated, but not intervening.
- The vehicle speed is at least 15 mph (20 km/h).
- The transmission is in position D.

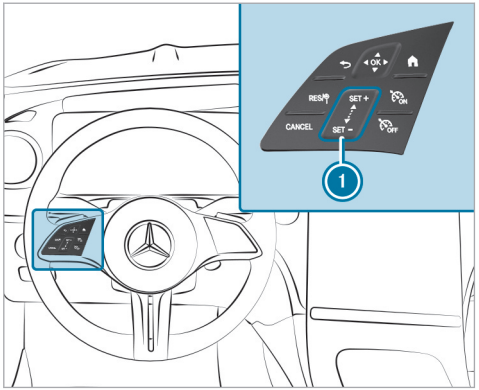

Steering wheel control panel for cruise control

RES/	Adopts the stored/detected speed
CANCEL	Deactivates cruise control
1 SET + SET -	Control panel for increasing/decreasing speed

ON	Activates cruise control
OFF	Deactivates cruise control

Activating cruise control

▶ Press ON.

Activating cruise control

▶ Press SET + or SET - on control panel (1).
The current speed will be stored and maintained by the vehicle.

or

▶ Press RES/.
The last stored speed will be called up and maintained by the vehicle.

If the last stored speed has previously been deleted, the current vehicle speed will be stored.

ⓘ When you switch off the vehicle, the last speed stored will be deleted.

Increasing/decreasing the stored speed

▶ To increase the stored speed: swipe upwards from the bottom of control panel (1).
- The stored speed will be increased by 1 mph (1 km/h).

▶ To decrease the stored speed: swipe downwards from the top of control panel (1).
- The stored speed will be decreased by 1 mph (1 km/h).

or

▶ Briefly press SET + or SET - on control panel (1).

The stored speed will be increased or decreased to the following values depending on the unit:

- **mph:** the next value ending in 5
- **km/h:** the next value ending in 0

or

▶ Accelerate the vehicle to the desired speed.

▶ Press SET + on control panel (1).

Adopting a detected speed

If cruise control is activated and Traffic Sign Assist has detected a traffic sign with a maximum permissible speed and this is displayed on the driver's display:

▶ Press RES/.
The maximum permissible speed shown by the traffic sign will be stored and the vehicle will maintain that speed.

Deactivating cruise control

▶ Press CANCEL.

Deactivating cruise control

▶ Press OFF.

ⓘ If you brake or deactivate ESP® or if ESP® intervenes, cruise control will be deactivated.

Active Distance Assist DISTRONIC

Function of Active Distance Assist DISTRONIC

ⓘ The Active Distance Assist DISTRONIC described for vehicles without the Driving Assistance Package is an on-demand feature (country-dependent) (→ page 77).

Active Distance Assist DISTRONIC maintains the set speed in free-flowing traffic. If vehicles are detected ahead the set distance is maintained, if necessary until the vehicle comes to a standstill. The vehicle accelerates or brakes depending on the distance to the vehicle in front and the set speed. The speed and distance to the vehicle in front are set and saved using the steering wheel.

Available speed range:

- **Vehicles without Driving Assistance Package:** 15 mph (20 km/h) - 100 mph (160 km/h)
- **Vehicles with Driving Assistance Package:** 15 mph (20 km/h) - 130 mph (210 km/h)

Other features of Active Distance Assist DISTRONIC:

- Adjusts the driving style depending on the selected drive program (energy-saving, comfortable or dynamic) (→ page 254)
- Initiates acceleration to the stored speed if the turn signal indicator is switched on to change to the overtaking lane
- **Vehicles with Driving Assistance Package:**
  - Reacts to stationary vehicles detected in urban speed ranges (except bicycles and motorcycles)
  - Takes one-sided overtaking restrictions into account on highways or multi-lane roads with separate roadways (country-dependent)

ⓘ In the DYNAMIC SELECT menu, it is possible to set the driving mode of Active Distance Assist DISTRONIC. Depending on the selected drive program, the driving behavior is energy-saving, comfortable or dynamic. In the Active Distance Assist menu, the driving style can be permanently set to comfortable or dynamic (→ page 326).

Vehicles with Active Parking Assist and Driving Assistance Package: if Active Distance Assist DISTRONIC has braked the vehicle to a standstill, it can automatically follow the vehicle in front when driving off again within 30 seconds if the system detects that the driver is touching the steering wheel. If a critical situation is detected in the surrounding area when driving off,such as a person in the vehicle path, a visual and acoustic warning indicates that the driver must now take control of the vehicle. The vehicle is not accelerated any further.

Observe the notes on driving systems and your responsibility; you may otherwise fail to recognize potential dangers (→ page 303).

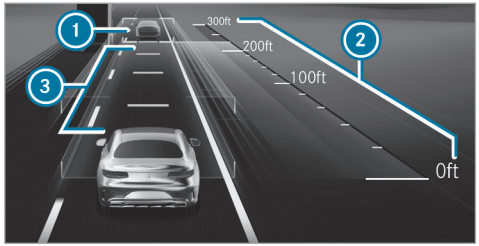

Display in the driver display in the menuAssistance

1. Vehicle in front
2. Distance indicator
3. Specified distance set

The vehicle detected in front 1 is highlighted in green. It may also be in the lane to the right of your vehicle in situations where it is not permitted

to overtake on the left, for example, on UK highways.

Permanent status display

Gray: Active Distance Assist DISTRONIC selected but not yet active

Green speedometer, gray vehicle: Active Distance Assist DISTRONIC active, speed set

Green: Active Distance Assist DISTRONIC active and vehicle detected

The stored speed is shown under the permanent status display and highlighted on the speedometer. Active Distance Assist DISTRONIC's status display is grayed out when in passive mode.

If the speed of the vehicle in front or the ascertained target speed due to the route event ahead is less than the stored speed, the segments in the speedometer light up.

The display appears briefly if you increase or decrease the specified distance 3.

ⓘ The green vehicle symbol is displayed cyclically when the vehicle is ready to pull away.

ⓘ The system is switched to passive mode if you depress the accelerator pedal beyond the Active Distance Assist DISTRONIC setting. The following message appears briefly in the driver display Suspended.

System limits

The system may be impaired or inoperative in the following instances, forexample:

- In snow, rain, fog, heavy spray, if there is glare, in direct sunlight or in greatly varying ambient light.
- The windshield in the camera's area is dirty, fogged up, damaged or covered.
- If the radar sensors are dirty or covered.
- In parking garages or on roads with steep uphill or downhill gradients.
- If there are narrow vehicles in front, such as bicycles or motorcycles.

In addition, on smooth or slippery roads, one or more wheels may lose grip due to braking or acceleration, and the vehicle may begin skidding.

Do not use Active Distance Assist DISTRONIC in these situations.

⚠ **WARNING** Risk of accident from acceleration or braking by Active Distance Assist DISTRONIC

Active Distance Assist DISTRONIC may accelerate or brake in the following cases, for example:

- If the vehicle pulls away using Active Distance Assist DISTRONIC.
- If the stored speed is called up and is considerably faster or slower than the currently driven speed.
- If Active Distance Assist DISTRONIC no longer detects a vehicle in front or does not react to relevant objects.

▶ Always carefully observe the traffic conditions and be ready to brake at all times.

▶ Take into account the traffic situation before calling up the stored speed.

WARNING Risk of accident due to insufficient deceleration by Active Distance Assist DISTRONIC

Active Distance Assist DISTRONIC brakes your vehicle with up to 50% of the possible deceleration. If this deceleration is not sufficient, Active Distance Assist DISTRONIC alerts you with a visual and acoustic warning.

▶ Adjust your speed and maintain a suitable distance from the vehicle in front.

▶ Brake the vehicle yourself and/or take evasive action.

WARNING Risk of accident if detection function of Active Distance Assist DISTRONIC is impaired

Active Distance Assist DISTRONIC does not react or has a limited reaction:

- when driving on a different lane or when changing lanes
- to pedestrians, animals, bicycles or stationary vehicles, or unexpected obstacles
- to complex traffic conditions
- to oncoming vehicles and crossing traffic

As a result, Active Distance Assist DISTRONIC may neither give warnings nor intervene in such situations.

▶ Always observe the traffic conditions carefully and react accordingly.

You can watch an animation on this topic via the following link:

Operating Active Distance Assist DISTRONIC

WARNING Risk of accident if detection function of Active Distance Assist DISTRONIC is impaired

Active Distance Assist DISTRONIC does not react or has a limited reaction:

- when driving on a different lane or when changing lanes
- to pedestrians, animals, bicycles or stationary vehicles, or unexpected obstacles
- to complex traffic conditions
- to oncoming vehicles and crossing traffic

As a result, Active Distance Assist DISTRONIC may neither give warnings nor intervene in such situations.

▶ Always observe the traffic conditions carefully and react accordingly.

WARNING Risk of accident from acceleration or braking by Active Distance Assist DISTRONIC

Active Distance Assist DISTRONIC may accelerate or brake in the following cases, for example:

- If the vehicle pulls away using Active Distance Assist DISTRONIC.
- If the stored speed is called up and is considerably faster or slower than the currently driven speed.

- If Active Distance Assist DISTRONIC no longer detects a vehicle in front or does not react to relevant objects.

▶ Always carefully observe the traffic conditions and be ready to brake at all times.

▶ Take into account the traffic situation before calling up the stored speed.

⚠ WARNING Risk of accident due to insufficient deceleration by Active Distance Assist DISTRONIC

Active Distance Assist DISTRONIC brakes your vehicle with up to 50% of the possible deceleration. If this deceleration is not sufficient, Active Distance Assist DISTRONIC alerts you with a visual and acoustic warning.

▶ Adjust your speed and maintain a suitable distance from the vehicle in front.

▶ Brake the vehicle yourself and/or take evasive action.

⚠ WARNING Risk of accident due to adjustment of speed by Active Speed Limit Assist.

The speed adopted by the Active Speed Limit Assist may be too high or incorrect in individual cases:

- At limit speeds below 12 mph (20 km/h)
- In wet or foggy conditions

▶ Ensure that the speed being driven always complies with the traffic laws.

▶ Adjust the speed being driven to the current traffic and weather conditions.

Requirements

- The electric parking brake is released.
- ESP® is activated and is not intervening.
- The transmission is in position D.
- All the doors are closed.
- The check on the radar sensor system has been completed successfully.
- Snow Chain Mode is not active (→ page 601).
- DSR is deactivated (→ page 328).
- Drive program is deactivated (→ page 254).

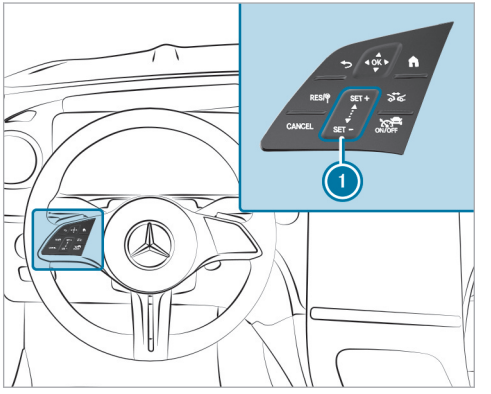

RES/	Adopts the stored/detected speed
CANCEL	Deactivates Active Distance Assist DISTRONIC
1 SET + SET -	Control panel for increasing/decreasing speed

Increases/decreases the specified distance

Activates/deactivates Active Distance Assist DISTRONIC

▶ **To operate Active Distance Assist DISTRONIC:** press the respective button with only one finger or swipe on the control panel.

Activates/deactivates Active Distance Assist DISTRONIC

▶ Press [ON/OFF].

Activating Active Distance Assist DISTRONIC

▶ **To activate without a stored speed:** press [SET +] on the upper section or [SET -] on the lower section of control panel (1) or press [RES/⊕]. Remove your foot from the accelerator pedal.

or

▶ **To activate with a stored speed:** press [RES/⊕]. Remove your foot from the accelerator pedal. The last stored speed will be called up and maintained by the vehicle.

If the stored speed has been deleted, the current vehicle speed will be stored.

Increasing or reducing the speed

▶ To increase the stored speed: swipe upwards from the bottom of control panel (1).
- The stored speed will be increased by 1 mph (1 km/h).

▶ To decrease the stored speed: swipe downwards from the top of control panel (1).
- The stored speed will be decreased by 1 mph (1 km/h).

or

▶ Briefly press [SET +] on the upper section or [SET -] on the lower section of control panel (1).
The stored speed will be increased or reduced by 5 mph (10 km/h).

or

▶ Accelerate the vehicle to the desired speed.

▶ Press [SET +] on the upper section of control panel (1).

Adopting the limit speed shown on the driver's display

▶ To activate Active Distance Assist DISTRONIC: press [SET +], [SET -] or [RES/⊕].

▶ To accept the displayed speed limit: press [RES/⊕].
The limit speed shown on the driver's display will be adopted as the stored speed. The vehicle will adapt its speed to that of the vehicle in front, but only up to the stored speed, or will limit its speed accordingly.

ⓘ A speed limit shown on the driver's display will be adopted only during travel, not when the vehicle is stationary.

Pulling away with Active Distance Assist DISTRONIC

▶ Activate Active Distance Assist DISTRONIC and remove your foot from the brake pedal.

▶ Press [RES/⊕].

or

▶ Depress the accelerator pedal briefly and firmly.
The functions of Active Distance Assist DISTRONIC will still be active.

Reducing or increasing the specified distance from the vehicle in front

▶ Press [icon].
The [icon] indicator will appear. The specified distance will be reduced by one level.

If the lowest level is already selected, the selection will jump to the highest level.

Deactivates Active Distance Assist DISTRONIC

⚠ **WARNING** Risk of an accident due to Active Distance Assist DISTRONIC being active when you leave the driver's seat

If you leave the driver's seat while the vehicle is being braked by Active Distance Assist DISTRONIC only, the vehicle can roll away.

▶ Always deactivate Active Distance Assist DISTRONIC and secure the vehicle to prevent it from rolling away before you leave the driver's seat.

▶ Press CANCEL.

ⓘ If you brake or deactivate ESP® or if ESP® intervenes, Active Distance Assist DISTRONIC will be deactivated.

Function of Active Speed Limit Assist

If a change in speed limit is detected and the automatic adoption of speed limits is switched on, this will automatically be adopted as the stored speed (→ page 326). Speed limits below 12 mph (20 km/h) will not be adopted.

The vehicle's speed will be adjusted when the vehicle is level with the traffic sign at the latest. In the case of signs indicating entry into an urban area, the speed will be adapted according to the speed permitted within the urban area. The speed limit indicator on the driver's display will always be updated when the vehicle is level with the traffic sign.

If you are driving on a German freeway and there is no speed limit, the system will use the speed stored for a stretch of road with no speed limit as the set speed. If you do not alter the stored speed on a stretch of road with no speed limit, the recommended speed of 80 mph (130 km/h) will be adopted.

If Active Distance Assist DISTRONIC has been put into passive mode by pressing the accelerator pedal, only speed limits which are higher than the set speed are adopted.

The maximum permissible speed does not take the road condition or current weather and traffic conditions into account. Adjust your speed accordingly as and when necessary.

Observe the notes on driving systems and your responsibility; you may otherwise fail to recognize dangers (→ page 303).

System limits

The system limits of Traffic Sign Assist apply to the detection of traffic signs (→ page 342).

Speed limits below 12 mph (20 km/h) will not automatically be adopted by the system as the stored speed. Temporary speed restrictions (e.g. for a certain time or due to weather conditions) cannot be properly detected by the system.

Adjust your speed in these situations.

⚠ **WARNING** Risk of accident due to adjustment of speed by Active Speed Limit Assist.

The speed adopted by the Active Speed Limit Assist may be too high or incorrect in individual cases:

- At limit speeds below 12 mph (20 km/h)
- In wet or foggy conditions

▶ Ensure that the speed being driven always complies with the traffic laws.

▶ Adjust the speed being driven to the current traffic and weather conditions.

You can watch an animation on this topic via the following link:

Function of route-based speed adaptation

When Active Distance Assist DISTRONIC is activated, the vehicle speed will be adapted accordingly to the route events ahead. Depending on the drive program selected, the vehicle will negotiate a route event ahead in an energy-saving, comfortable or dynamic manner. When the route event has been passed, the vehicle will accelerate again to the stored speed. The set distance to the vehicle in front, vehicles detected ahead and speed restrictions ahead will be taken into account.

Route-based speed adaptation can be activated in the multimedia system (→ page 326).

The following route events will be taken into account:

- Bends
- Traffic circles
- T-intersections
- Turns and exits
- Traffic jams ahead (only with Live Traffic (→ page 484))

Also, the speed will be reduced if the turn signal indicator is switched on and one of the following situations is detected:

- Turning off at intersections
- Driving in slowing-down lanes
- Driving in lanes adjacent to slowing-down lanes

The driver is responsible for choosing the right speed and observing other road users. This applies in particular to intersections, traffic circles and traffic lights, as route-based speed adaptation does not brake the vehicle to a standstill.

When route guidance is active, the first speed adjustment will be carried out automatically. If the turn signal indicator is switched on, the selected route will be confirmed and further speed adjustment will be activated.

Speed adjustment will be canceled in the following cases:

- If the turn signal indicator is switched off before the route event and it is therefore assumed that the route event is not relevant to the driver
- If the driver depresses the accelerator or brake pedal during the process

System limits

Route-based speed adaptation does not take right of way regulations into account. The driver is responsible for complying with road traffic regulations and driving at a suitable speed.

In difficult conditions, the speed selection made by the system may not always be suitable. This applies to the following situations, for example:

- The road's course is not clearly visible
- Road narrowing
- Varying maximum permissible speeds in individual lanes, e.g. at toll stations
- Wet road surfaces, snow or ice
- If transport equipment, such as a trailer or bicycle rack, is attached to the trailer hitch and the electrical connection has been correctly established.

The driver will need to intervene accordingly in these situations.

WARNING Risk of accident in spite of route-based speed adaptation

Route-based speed adaptation can malfunction or be temporarily unavailable in the following situations:

- If the driver does not follow the calculated route
- If map data is not up-to-date or available
- In the event of roadworks
- In bad weather or road conditions
- If the accelerator pedal is depressed
- In the event of electronically displayed speed limitations

▶ Adapt the speed to the traffic situation.

Setting Active Distance Assist DISTRONIC driving styles

Requirements

- Active Distance Assist DISTRONIC is activated.

Multimedia system:

→ ⌂ ▸▸ Settings ▸▸ Assistance ▸▸ Driving ▸▸ Active Distance Assist

Selecting a driving style

▶ Select Based on DYNAMIC SELECT, Dynamic or Comfortable.

ⓘ Further information about Active Distance Assist DISTRONIC (→ page 321).

Setting speed adjustment

▶ Select Adopt Speed Limit or Route-based Speed Adaptation.
When these functions are active, the vehicle speed will be adjusted depending on the route events ahead.

ⓘ If one of the following systems is activated, the detected speed can be manually adopted as the speed limit:

- Active Distance Assist DISTRONIC
- Variable limiter

ⓘ Further information on speed adjustment (→ page 325).

Function of Active Stop-and-Go Assist

Active Stop-and-Go Assist helps you when in traffic jams on multi-lane roads with separate roadways by automatically pulling away within up to 60 seconds and with moderate steering maneuvers. It orients itself using the vehicle in front and lane markings. Active Stop-and-Go Assist automatically maintains a safe distance from the vehicle in front and vehicles cutting in.

Active Stop-and-Go Assist requires you, as the driver, to keep your hands on the steering wheel at all times so that you are able to intervene at any time to correct the course of the vehicle and keep it in lane.

Observe the notes on driving systems and your responsibility; you may otherwise fail to recognize dangers (→ page 303).

Active Stop-and-Go Assist activates automatically when all the following conditions are met:

- You are in a traffic jam on a highway or high-speed major road.
- Active Distance Assist DISTRONIC is activated and active (→ page 321).
- Active Steering Assist is activated and active (→ page 331).
- You are traveling no faster than 35 mph (60 km/h).

When Active Stop-and-Go Assist is active the [ ] status display appears on the driver's display.

System limits

The system limitations of Active Distance Assist DISTRONIC and Active Steering Assist apply to Active Stop-and-Go Assist (→ page 329).

DSR (Downhill Speed Regulation)

Function of DSR

DSR is an aid to assist you when driving downhill. It keeps the speed of travel at the selected target speed. The steeper the downhill gradient, the greater the DSR braking effect on the vehicle. On flat stretches of road and uphill gradients, DSR brakes the vehicle minimally or not at all.

When DSR is activated and the transmission is in position [D], [R] or [N], DSR controls the driving speed. The target speed can be set to a value between 1 mph (2 km/h) and 11 mph (18 km/h). By braking or accelerating, you can drive at a higher or lower speed than the target speed at any time.

DSR will be switched off automatically

- if you are driving at a speed greater than 28 mph (45 km/h)
- if you change the drive program

The [DSR] Off message will appear on the driver's display. The status indicator on the driver's display will go out. You will also hear a warning tone.

ⓘ DSR will remain active in drive program [ ].

Information on DSR

⚠ **WARNING** Risk of skidding and accident when DSR is activated on slippery road surfaces

If the driven speed and the target speed differ, the wheels may lose traction.

▶ Take into account the road surface and the difference between the driving speed and target speed before activating DSR.

Observe the notes on driving systems and your responsibility; you may otherwise fail to recognize dangers (→ page 303).

You are always responsible for keeping control of the vehicle and for assessing whether the downhill gradient can be negotiated. Depending on road surface and tires, DSR may not always be able to keep to the target speed. Select a target speed suitable for the environmental conditions and also apply the brakes yourself if required.

Activating or deactivating DSR (Downhill Speed Regulation)

Requirements

- You are driving at 24 mph (40 km/h) or slower.

  If the vehicle speed is too high, the Max. speed 40 km/h message appears in the driver's display.
- Active Distance Assist DISTRONIC, cruise control and the variable limiter are switched off.

Multimedia system:

→ [⌂] ▸▸ Settings ▸▸ Assistance

▶ Select [DSR].
A status display appears in the driver's display when the function is activated.

Changing the target speed

When DSR is activated, you can change the target speed to a value between 1 mph (2 km/h) and 11 mph (18 km/h).

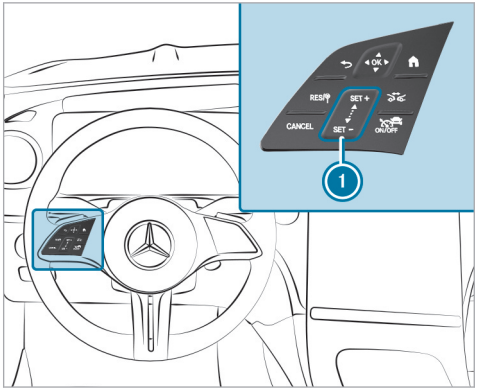

▶ **To increase the target speed:** swipe upwards from the bottom of control panel (1).
- The target speed will be increased by 1 mph (1 km/h).

or

▶ Press and hold [SET +] at the top of control panel (1).
The target speed will be increased in 1-mph (1-km/h) increments.

▶ **To reduce the target speed:** swipe downwards from the top of control panel ①.
- The target speed will be reduced by 1 mph (1 km/h).

or

▶ Press and hold SET - at the bottom of control panel ①.
The target speed will be reduced in 1-mph (1-km/h) increments.

The set target speed will be shown DSR next to the status display on the driver's display.

Active Steering Assist

Function of Active Steering Assist

Active Steering Assist is available up to a speed of 130 mph (210 km/h). The system helps you to stay in the center of the lane by means of moderate steering interventions. Depending on the vehicle's speed, Active Steering Assist uses the vehicles ahead and lane markings as a reference.

ⓘ Depending on the country, Active Steering Assist can use the surrounding traffic as a reference in the lower speed range. If necessary, Active Steering Assist can then also provide assistance outside the center of the lane.

If the detection of lane markings and vehicles ahead is impaired, Active Steering Assist will switch to passive mode. The system will provide no support in this case.

Permanent status display on the driver's display

Gray: activated and passive

Green: activated and active

Red, flashing: prompt to the driver to actively confirm or transition from active to passive status, system limit detected

ⓘ During the transition from active to passive status, the symbol will be shown as enlarged and flashing. Once the system is passive, the symbol will be shown as gray on the driver's display.

Touch detection

The driver is required to keep their hands on the steering wheel at all times and be able to intervene at any time to correct the course of the vehicle and keep it in lane. The driver must expect a change from active to passive mode or vice versa at any time.

If the system detects that the driver has not steered the vehicle for a considerable period of time or has removed their hands from the steering wheel, an optical warning will be given first. Display ① will appear on the driver's display. If the driver still does not steer the vehicle, or gives no confirmation to the system, a warning tone will sound in addition to the visual warning message.

If the driver does not react to this warning for a considerable period, an emergency stop may be initiated (→ page 331).

The warning will not be issued or will be stopped as soon as the system detects that the driver has touched the steering wheel.

Touch detection may be limited or may not function if there is no direct contact between hand and steering wheel, e.g. if you are wearing gloves or if there is a steering wheel cover on the steering wheel.

If Active Steering Assist detects that a system limit has been reached, a visual warning will be issued and a warning tone will sound.

Observe the notes on driving systems and your responsibility; you may otherwise fail to recognize dangers (→ page 303).

System limits

Active Steering Assist has a limited steering torque for lateral guidance. In some cases, the steering intervention will not be sufficient to keep the vehicle in the lane.

The system may be impaired or may not function in the following instances:

- Visibility is poor, e.g. due to snow, rain, fog, heavy spray, greatly varying ambient light or strong shadows on the road.
- There is glare, e.g. from oncoming traffic, direct sunlight or reflections.
- There is insufficient illumination of the road.
- The windshield is dirty, fogged up, damaged or covered in the vicinity of the camera, e.g. by a sticker.
- No lane markings or several unclear lane markings are present for one lane, or the markings change quickly, for example, in a construction area or at intersections.
- The lane markings are worn away, dark or covered up, e.g. by dirt or snow.
- The distance to the vehicle in front is too short and the lane markings cannot be detected as a result.
- The road is narrow and winding.
- There are obstacles in the lane or projecting out into the lane, such as object markers.
- Transport equipment such as a trailer or bicycle rack is attached to the trailer hitch and the electrical connection has been correctly established.

The system will not provide assistance in the following conditions:

- On very tight bends and when turning.
- When crossing intersections.
- At traffic circles or toll stations.
- When actively changing lane without switching on the turn signal indicator.
- When the tire pressure is too low.

⚠ WARNING Risk of accident if Active Steering Assist unexpectedly stops functioning

If the system limits of Active Steering Assist are reached there is no guarantee that the system will remain active or will keep the vehicle in lane.

▶ Always keep your hands on the steering wheel and observe the traffic carefully.

▶ Always steer the vehicle paying attention to traffic conditions.

⚠ **WARNING** Risk of accident if Active Steering Assist unexpectedly intervenes

The detection of lane markings and objects may malfunction and cause unexpected steering interventions.

▶ Steer according to traffic conditions.

You can watch an animation on this topic via the following link:

Activating/deactivating Active Steering Assist

Requirements

- ESP® is activated, but is not intervening.
- Active Distance Assist DISTRONIC is activated.

Multimedia system:

→ ⌂ ▸▸ Settings ▸▸ Assistance ▸▸ Driving

▶ Activate or deactivate Active Steering Assist.

Function of Active Emergency Stop Assist

Active Emergency Stop Assist monitors the steering wheel as well as the accelerator and brake pedals. If the system detects a lack of driver activity or the vehicle is in danger of leaving the lane, a warning can be issued and an emergency stop initiated.

Vehicles without Driving Assistance Package: The system is available from a speed of approx. 37 mph (60 km/h).

Vehicles with Driving Assistance package: If Active Steering Assist is switched off, the system is available from a speed of approx. 37 mph (60 km/h).

If the system detects that the vehicle is in danger of leaving the lane, a warning can be issued and an emergency stop initiated.

- The driver has not touched the steering wheel for a certain while, or no steering movement is detected for a lengthy period (depending on the vehicle equipment).
- Neither the accelerator nor the brake pedal is depressed.

ⓘ **Vehicles with Driving Assistance package:** if Active Steering Assist is switched on and active, the system monitors only the steering wheel. If the driver has not touched the steering wheel for a certain while, a warning may be issued despite pedal actuation.
Observe also the instructions on the touch detection of Active Steering Assist (→ page 329).

Active Emergency Stop Assist issues the following warnings in order:

- Display message ① appears in the driver display.

- In addition to display ①, a warning tone sounds.
- The Initiating Emergency Stop message appears in the driver display, a continuous warning tone sounds and the vehicle will no longer accelerate. Additionally, a slight tensioning of the belt will be generated as required.
- The vehicle speed is reduced in increments until the vehicle comes to a standstill. Sharp brake impulses are also effected.

ⓘ **Vehicles with Driving Assistance Package:** If Active Distance Assist DISTRONIC is active and the driver unfastens the seat belt and opens the driver's door, an emergency stop can be initiated immediately.

Vehicles with Driving Assistance package: If possible, a lane change to the adjacent lane is performed (country-dependent). It is possible to change lanes across one lane and only to the outside lane, not to the hard shoulder.

When automatic braking is initiated, Active Distance Assist DISTRONIC is deactivated. Depending on the respective country, the hazard warning light system is switched on.

When the vehicle has come to a standstill:

- the vehicle is secured with the electric parking brake.
- the vehicle is unlocked.
- if possible, an emergency call is made to the Mercedes-Benz emergency call center.

Before automatic braking is initiated, you can cancel Active Emergency Stop Assist by turning the steering wheel.

You can cancel an intervention by Active Emergency Stop Assist after automatic braking is initiated by performing one of the following actions:

- Accelerating or braking: the emergency stop is canceled, but the warning message, warning tone and electric power steering remain active
- Steering: electric power steering is canceled, the warning message and warning tone remain active, and the vehicle continues to be braked

ⓘ Active Emergency Stop Assist can initiate an emergency stop a maximum of three times within a driving cycle. After that, Active Steering Assist and Active Emergency Stop Assist are disabled until the vehicle has been restarted.

System limits

For the detection of vehicles and other obstacles, observe the system limits of the following functions:

- Active Distance Assist DISTRONIC (→ page 318)
- Active Steering Assist (→ page 329)
- Active Lane Change Assist (→ page 333)
- Active Lane Keeping Assist (→ page 350)
- Active Brake Assist (→ page 337)

Vehicles without Driving Assistance Package:

Active Emergency Stop Assist is inactive in the following cases:

- Active Lane Keeping Assist has reached a system limit.
- OFF Active Lane Keeping Assist is switched off (white status display).

- Active Lane Keeping Assist is not ready (gray status display).

Active Lane Change Assist

Function of Active Lane Change Assist

Active Lane Change Assist helps the driver with changing lanes by applying steering torque and is activated when the driver indicates briefly.

For this, the following conditions must be fulfilled:

- You are driving on a highway or high-speed major road.
- The vehicle's speed is between approximately 40 mph (65 km/h) and 110 mph (180 km/h).
- The adjacent lane is separated by a broken lane marking.
- No vehicle or obstacle is detected in the adjacent lane.
- Active Lane Change Assist is selected in the multimedia system.
- Active Distance Assist DISTRONIC and Active Steering Assist are switched on and active.

Display in the driver's display in the menuAssistance

1 Green arrow: lane change initiated
2 Red arrow: lane change canceled

When Active Lane Change Assist is available, the indicator will appear along with green arrows on the driver's display. If the system has been activated but is not currently available, the indicator will appear along with gray arrows on the driver's display.

F254 0138 13

If no vehicle or obstacle is detected in the adjacent lane and a lane change is permitted, the lane change will begin after the driver has indicated briefly. The lane change will be shown to the driver with a flashing green arrow next to the steering wheel symbol. Green arrow 1 will be displayed in the appropriate adjacent lane on the driver's display on the Assistance menu. A message reading Lane Change to the Left, for example, will also appear.

If a lane change is not possible directly after the driver has activated the turn signal indicator because e.g. an obstacle has been detected, the arrow will also flash in green next to the steering wheel symbol . The neighboring lane will continue to be monitored. When the lane becomes clear, a lane change will be carried out and a message reading e.g. Lane Change to the Left will appear on the driver's display. When the green arrows stop flashing, activate the lane change again.

Active Lane Change Assist can be canceled in various situations, including the following:

- Change in the surrounding conditions (e.g. detected obstacle).
- The driver steers too sharply or in the opposite direction.
- The driver moves the turn signal indicator in the opposite direction.
- Active Distance Assist DISTRONIC or Active Steering Assist is deactivated.
- The vehicle cannot make the lane change as planned.

Cancellation of Active Lane Change Assist will be displayed as follows:

- The arrow in the selected direction of travel turns red.
- A corresponding message will also appear in the driver's display.
- In certain circumstances, a warning tone will sound.

WARNING Risk of accident when changing lane to an occupied adjacent lane

Lane Change Assist cannot always clearly detect if the adjacent lane is free.

The lane change might be initiated although the adjacent lane is not free.

▶ Before changing lanes, make sure that the neighboring lane is free and there is no danger to other road users.

▶ Monitor the lane change.

WARNING Risk of accident if Lane Change Assist unexpectedly stops functioning

If the system limitations for Lane Change Assist have been reached, there is no guarantee that the system will remain active.

Lane Change Assist cannot then assist you by applying steering torque.

▶ Always monitor the lane change and keep your hands on the steering wheel. Observe the traffic conditions and steer and/or brake if necessary.

Automatic Lane Change

Automatic Lane Change is a sub-function of Active Lane Change Assist. It can assist the driver in deciding when a lane change is appropriate and in executing it.

WARNING Risk of accident due to incorrectly triggered lane change

The system cannot always clearly recognize all situations in which a lane change is appropriate.

The system can initiate a lane change even though the traffic situation is not suitable or the neighboring lane is not available, not usable or occupied.

▶ Always monitor the traffic situation.

▶ If necessary, cancel the lane change by holding the steering wheel or countersteering slightly and return the vehicle to its own lane.

You can cancel a lane change initiated by the system at any time by holding the steering wheel or

countersteering slightly and returning the vehicle to its own lane.

For an Automatic Lane Change, the following conditions must be met:

- The conditions for activating Active Lane Change Assist are fulfilled.
- Automatic Lane Change is activated in the multimedia system.
- You are driving on a freeway in a country where the function is available.
- The road you are currently driving on allows lane changes (e.g. there are no tight bends).
- The vehicle speed is between approximately 40 mph (65 km/h) and 85 mph (140 km/h).

Active Lane Change Assist can initiate an automatic lane change in various situations, including the following:

- The set desired speed of Active Distance Assist DISTRONIC cannot be reached due to a slower vehicle in front.
- There is little traffic and the set desired speed of Active Distance Assist DISTRONIC can also be reached in a slower lane.
- A lane change is necessary to follow the set route in the navigation system or the road you are currently driving on. The lane change may take place before the request to do so appears in the navigation system.
- The system detects that the lane you are driving in will end soon.
- You are in the lane furthest to the right.

In particular, Active Lane Change Assist will not execute Automatic Lane Change in the following situations:

- If the vehicle is already in a lane that it should use to follow the set route in the navigation system.
- On some route sections, no lane change will be made to the lanes furthest to the right.
- The system detects that the neighboring lane will end soon.
- If Automatic Lane Change has been canceled by the driver, no lane change in that direction will be initiated for a certain time.
- If the driver has initiated a lane change in one direction or has changed lanes manually, no lane change in the opposite direction will be initiated for a certain time.

The same abort conditions apply to Automatic Lane Change as to driver-initiated lane changes with Active Lane Change Assist.

In addition, Automatic Lane Change can be canceled in the following circumstances in particular:

- The system detects a road work site marked off by traffic cones in the vehicle's own lane or in the neighboring lane during the lane change.
- The system detects that the reason for the lane change no longer exists.

Display in the driver's display

When Automatic Lane Change is turned on, the Automatic Lane Change On message will appear. When Automatic Lane Change is available, the indicator will appear in green instead of the

indicator. If Automatic Lane Change is available but not all conditions to activate the function are currently met, the A symbols will be shown in gray. If the system deems it advisable to change lanes and needs to adjust the traveled speed to do so, the green A will flash on the side to which a lane change is to be made.

When Automatic Lane Change starts, for example, the Lane Change to the Left message will appear and a warning tone will sound.

When Automatic Lane Change is canceled, the A on the side to which a lane change should be made will turn red. Additional warning messages may also appear and another warning tone may sound in certain situations.

System limits

The system limits of Active Steering Assist apply to Active Lane Change Assist (→ page 329).

The system may also be impaired or may not function in the following situations:

- The sensors are damaged, covered or dirty (→ page 303).
- The exterior lighting shows a defect.
- The system does not detect a suitable road, such as on tight bends.
- The vehicle is at a road work site.

Automatic Lane Change may not function or may be impaired in the following situations in particular and could lead to lane changes being initiated incorrectly:

- The vehicle is at a road work site and/or the system has detected a road work site marked off by traffic cones.
- The system can no longer detect the lane marking correctly.
- It is raining heavily.
- Another vehicle changes to the same lane at the same time (e.g. when the vehicle is passing an on-ramp).

ⓘ The Active Lane Change Assist sensors adjust automatically while a certain distance is being driven after the vehicle has been delivered. Active Lane Change Assist will be unavailable during this teach-in process, and no arrows will be displayed next to the Active Steering Assist symbol .

F254 0138 13

Observe the notes on driving systems and your responsibility; you may otherwise fail to recognize dangers (→ page 303).

Setting Active Lane Change Assist

Multimedia system:

→ ⌂ ▸▸ Settings ▸▸ Assistance ▸▸ Driving ▸▸ Active Lane Change Assist

▶ Select Active Lane Change Assist.

▶ Choose between the On and Off setting options.

▶ Choose between the On, Also Automatically and Off setting options.

The Also Automatically setting option can also be switched on and off on the quick-access menu.

ⓘ If Active Steering Assist has been switched off, it will not be possible to operate Active Lane Change Assist.

Active Brake Assist

Function of Active Brake Assist

Active Brake Assist consists of the following functions:

- Collision warning
- Autonomous braking function
- Situation-dependent brake force boosting
- **Vehicles with Driving Assistance Package and Active Steering Assist:** Evasive Steering Assist
- **Vehicles with Driving Assistance Package:** Evasive Steering Assist
- **Vehicles with Driving Assistance Package:** intersection start-off function

Active Brake Assist can help you to minimize the risk of a collision with vehicles, cyclists or pedestrians or to reduce the effects of such a collision.

If Active Brake Assist has detected a risk of collision, a warning tone will sound and the distance warning lamp [⚠] will light up.

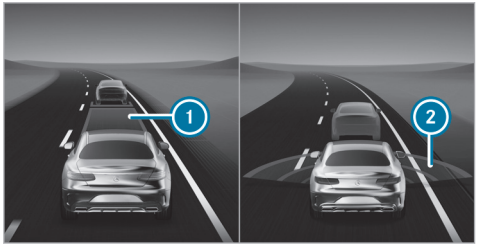

Display on the driver's display in the Assistance menu

1. Insufficient distance
2. Red radar waves

In the Assistance menu, an insufficient distance to the vehicle in front (1) will be displayed in red. If you further reduce the distance, the vehicle in front will also be highlighted in red. When the system detects a risk of collision, red radar waves (2) will appear in front of your vehicle.

ⓘ **Vehicles with PRE-SAFE®:** depending on the country, an additional haptic warning will occur in the form of slight, repeated tensioning of the seat belt on the driver's side.

ⓘ **Vehicles with active ambient lighting:** if Warning Support is activated, the Active Brake Assist warning will also be accompanied by ambient lighting (→ page 202).

If you do not react to the warning, autonomous braking can be initiated in critical situations.

In particularly critical situations, Active Brake Assist can also initiate autonomous braking directly. In this case, the warning tone and the distance warning lamp [⚠] will occur at the same time as the brake application.

If you apply the brakes yourself in a critical situation or apply the brakes during autonomous braking, situation-dependent brake force boosting will occur. The brake pressure will increase up to maximum full-stop braking if necessary.

If autonomous braking or situation-dependent brake force boosting has occurred, pop-up 1 will appear on the driver's display and then automatically disappear after a short time.

If the autonomous braking function or situation-dependent brake force boosting is triggered, preventive measures for occupant protection (PRE-SAFE®) may also be initiated.

WARNING Risk of an accident caused by limited detection performance of Active Brake Assist

Active Brake Assist cannot always clearly identify objects and complex traffic situations.

In such cases, Active Brake Assist might:

- Give a warning or brake without reason
- Not give a warning or not brake

Active Brake Assist is only an aid. The driver is responsible for maintaining a sufficiently safe distance to the vehicle in front, vehicle speed and for braking in good time.

▶ Always pay careful attention to the traffic situation; do not rely on Active Brake Assist alone.

▶ Be prepared to brake or swerve if necessary.

If Active Brake Assist is deactivated or the functions are restricted, e.g. due to activation of another driving system, the Active Brake Assist warning lamp OFF will appear on the driver's display.

If the system is unavailable due to dirty or damaged sensors or due to a malfunction, or if the functions are restricted, the Active Brake Assist warning lamp will appear on the driver's display.

Also observe the system limits of Active Brake Assist.

The individual subfunctions are available in the following speed ranges:

Collision warning

The collision warning can assist you in the following situations from approximately 4 mph (7 km/h) with an intermittent warning tone and the distance warning lamp .

Vehicles without Driving Assistance Package:

- At speeds up to approximately 155 mph (250 km/h) when approaching vehicles ahead
- At speeds up to approximately 50 mph (80 km/h) when approaching stationary vehicles, pedestrians walking in the direction of travel and cyclists ahead
- At speeds up to approximately 43 mph (70 km/h) when approaching crossing pedestrians and cyclists
- At speeds up to approximately 37 mph (60 km/h) when approaching stationary pedestrians and cyclists

Vehicles with Driving Assistance Package:

- At speeds up to approximately 155 mph (250 km/h) when approaching vehicles ahead
- At speeds up to approximately 75 mph (120 km/h) when approaching crossing vehicles, pedestrians and cyclists
- At speeds up to approximately 62 mph (100 km/h) when approaching stationary vehicles
- At speeds up to approximately 50 mph (80 km/h) when approaching cyclists ahead
- At speeds up to approximately 43 mph (70 km/h) when approaching stationary pedestrians and cyclists

Autonomous braking function

From a speed of approximately 4 mph (7 km/h), the autonomous braking function may intervene in the following situations:

Vehicles without Driving Assistance Package:

- At speeds up to approximately 155 mph (250 km/h) when approaching vehicles ahead
- At speeds up to approximately 50 mph (80 km/h) when approaching cyclists ahead, pedestrians walking in the direction of travel and stationary vehicles
- At speeds up to approximately 43 mph (70 km/h) when approaching crossing pedestrians and cyclists

Vehicles with Driving Assistance Package:

- At speeds up to approximately 155 mph (250 km/h) when approaching vehicles ahead
- At speeds up to approximately 75 mph (120 km/h) when approaching crossing vehicles, pedestrians and cyclists
- At speeds up to approximately 62 mph (100 km/h) when approaching stationary vehicles
- At speeds up to approximately 50 mph (80 km/h) when approaching cyclists ahead
- At speeds up to approximately 43 mph (70 km/h) when approaching stationary pedestrians and cyclists

Situation-dependent brake force boosting

From a speed of approximately 4 mph (7 km/h), situation-dependent brake force boosting may intervene in the following situations.

Vehicles without Driving Assistance Package:

- At speeds up to approximately 155 mph (250 km/h) when approaching vehicles ahead
- At speeds up to approximately 50 mph (80 km/h) when approaching cyclists ahead, pedestrians walking in the direction of travel and stationary vehicles
- At speeds up to approximately 43 mph (70 km/h) when approaching crossing pedestrians and cyclists
- At speeds up to approximately 37 mph (60 km/h) when approaching stationary pedestrians and cyclists

Vehicles with Driving Assistance Package:

- At speeds up to approximately 155 mph (250 km/h) when approaching vehicles ahead
- At speeds up to approximately 75 mph (120 km/h) when approaching crossing vehicles, pedestrians and cyclists

- At speeds up to approximately 62 mph (100 km/h) when approaching stationary vehicles
- At speeds up to approximately 50 mph (80 km/h) when approaching cyclists ahead
- At speeds up to approximately 43 mph (70 km/h) when approaching stationary pedestrians and cyclists

Canceling a brake application by Active Brake Assist

You can cancel a brake application by Active Brake Assist at any time:

- by fully depressing the accelerator pedal or with kickdown.
- by releasing the brake pedal.

Active Brake Assist may cancel the brake application when one of the following conditions is fulfilled:

- You maneuver to avoid an obstacle.
- There is no longer a risk of collision.
- An obstacle is no longer detected in front of your vehicle.

Reaction to oncoming road users (only vehicles with Driving Assistance Package)

Active Brake Assist can also react to detected oncoming road users:

- Reaction up to a speed of approximately 62 mph (100 km/h)
- Warning regarding oncoming road users via warning tone and distance warning lamp
- Autonomous brake application in order to reduce the severity of an accident

Intersection start-off function (vehicles with Driving Assistance Package only)

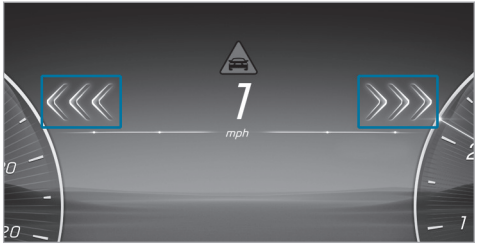

If a risk of collision with crossing traffic is detected when you are pulling away or driving at walking pace, three red arrows pointing in the direction of the crossing road user will light up one after the other on the driver's display together with the distance warning lamp . If the situation is particularly critical, the arrows will flash. A warning tone will also sound. If you do not react to the warning in critical situations, acceleration may be restricted or autonomous braking may be initiated. Autonomous braking can also prevent the vehicle from pulling away and hold it at a

standstill. In particularly critical situations, Active Brake Assist can also initiate autonomous braking directly. In this case, the distance warning lamp and the warning tone will occur at the same time as the brake application.

If autonomous braking or situation-dependent brake force boosting has occurred, a pop-up will appear on the driver's display and then automatically disappear after a short time.

In the Late setting of Active Brake Assist, the purely visual warning level and the limitation of possible acceleration will be deactivated. If the situation is particularly critical, it is still possible for a visual warning to be issued, a warning tone to be emitted and autonomous braking to be initiated.

Evasive Steering Assist

WARNING Risk of accident despite Evasive Steering Assist

Evasive Steering Assist cannot always recognize objects or complex traffic situations clearly.

Moreover, the steering support provided by Evasive Steering Assist is not sufficient to avoid a collision.

- ▶ Always pay careful attention to the traffic situation; do not rely on Evasive Steering Assist alone.
- ▶ Be prepared to brake or swerve if necessary.
- ▶ End the support by actively steering in non-critical situations.
- ▶ Drive at an appropriate speed if there are pedestrians close to the path of your vehicle.

Evasive Steering Assist has the following characteristics:

- Detection of pedestrians, cyclists and vehicles.
- Assistance through power-assisted steering if a swerving maneuver is detected.
- Activation by an abrupt steering movement during a swerving maneuver.
- Assistance during swerving and straightening of the vehicle.
- Reaction from a speed of approximately 12 mph (20 km/h) up to a speed of approximately 68 mph (110 km/h).

The support of Evasive Steering Assist can be canceled at any time by counter steering.

System limits

Full system performance will not yet be available for a short time after switching on the vehicle or after driving off. As long as the functions are restricted, the Active Brake Assist warning lamp may also be shown on the driver's display. Depending on the environmental conditions, it may take a few minutes before full system performance is available.

The system may be impaired or may not function, particularly in the following situations:

- In snow, rain, fog, heavy spray, direct sunlight or greatly varying ambient light, or if there is glare.
- If the sensors are dirty, fogged up, damaged or covered. (→ page 303)

- If the sensors are impaired due to interference from other radar sources, e.g. strong radar reflections in parking garages.
- If a loss of tire pressure or a defective tire has been detected and displayed.
- In complex traffic situations where objects cannot always be clearly identified.
- If pedestrians, cyclists or vehicles move quickly into the sensor detection range.
- If road users are hidden by other objects or are located close to other objects.
- If the typical outline of a pedestrian or cyclist cannot be distinguished from the background.
- If a pedestrian or cyclist is not detected as such, e.g. due to special clothing or other objects.
- If the driver's seat belt is not fastened.
- On bends with a tight radius.

You can watch an animation on this topic via the following link:

Setting Active Brake Assist

Requirements

- The vehicle is switched on.

Multimedia system:

→ [⌂] ▸▸ Settings ▸▸ Assistance ▸▸ Collision Avoidance

▶ Activate or deactivate the function.

ⓘ It is recommended that you always leave Active Brake Assist activated.

Switching off Active Brake Assist also switches off the distance warning function, the collision warning, the autonomous braking function and Active Evasive Steering Assist (with Driving Assistance Package - country-dependent).

ⓘ If Active Brake Assist is deactivated, the [OFF] symbol appears in the status bar of the driver display. When the vehicle is next started, the system is activated again.

Setting warning timing

▶ Select [⚙] alongside Active Brake Assist.

▶ Select Early, Medium or Late.

Traffic Sign Assist

Function of Traffic Sign Assist

Traffic Sign Assist detects the traffic signs with the multifunction camera and compares them with the information on the digital road map of the navigation system. It supports you by showing detected speed restrictions and overtaking bans on the driver display.

Maximum permissible speeds can also be shown on the head-up display.

The system can issue a warning when you exceed the maximum permissible speed.

In some countries, the system can provide you with further functions and can warn you when you are approaching pedestrian crossings or when you are about to drive past stop signs or red lights unintentionally.

The camera also detects and analyzes traffic signs with a restriction indicated by an additional sign (e.g. in wet conditions).

Traffic Sign Assist portrays only selected signs on the driver display. Actual traffic signs and speed

restrictions have priority over traffic signs and speed restrictions shown on the driver display.

Observe the notes on driving systems and your responsibility; you may otherwise fail to recognize potential dangers (→ page 303).

Notes on trailer operation

ⓘ Observe also the notes on trailer operation (→ page 387).

If a trailer or bicycle rack is connected correctly, the central display shows the query about the type of trailer and its maximum permissible speed (→ page 390).

The driver must manually adjust the maximum permissible speed in the small or large trailer category.

In particular, the country-specific laws must be taken into account, e.g. on:

- maximum design speed or speed restriction for which the vehicle is approved
- permissible gross mass with or without towing vehicle
- required number of years with a corresponding driving license
- type and condition of the road used
- the weather conditions

The maximum permissible speed adapted to the vehicle/trailer combination can be transferred to the manual or automatic speed transfer during the journey (depending on the equipment).

On the system side, relevant additional signs for speed restrictions and clear road category traffic rules can be considered for the vehicle combination (depending on the country).

No maximum permissible speed can be selected for a bicycle rack in the multimedia system. When using a bicycle rack, observe the specifications for the maximum permissible speed in the Operator's Manual.

Observe also the following information:

- select a speed adapted to the traffic, surroundings and weather conditions
- observe actual traffic signs
- observe applicable traffic rules and regulations

F254 0138 13

Observe the notes on driving systems and your responsibility; you may otherwise fail to recognize potential dangers (→ page 303).

Displays on the driver display

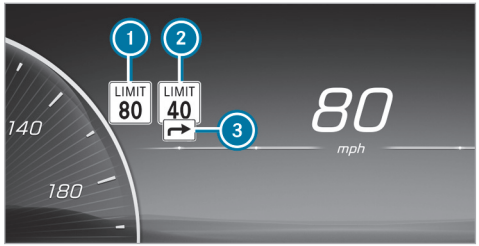

1. Permissible speed
2. Permissible speed when there is a restriction
3. Additional sign with restriction

The system can show up to two traffic signs on the driver display simultaneously. The system always prioritizes displaying speed restrictions. The head-up display shows only one traffic sign with a maximum permissible speed. If two speed signs are shown on the driver display, forexample,

when speed limits are detected, the value of the left-hand speed restriction ① is always transmitted to the cruise control or Active Distance Assist DISTRONIC for acceptance and shown on the head-up display.

Important information from other systems can cause traffic signs to be hidden for a short time.

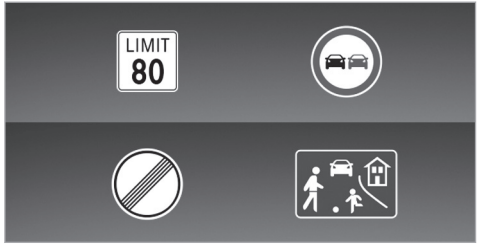

Examples of traffic signs which can be displayed

Traffic Sign Assist can detect and display the following traffic signs ①:

- speed restrictions
- end of the speed restriction
- overtaking restrictions
- play streets
- recommended speeds

Traffic Sign Assist can detect the following additional signs ③ and, if necessary, analyze the relevance of the restrictions using other vehicle sensors:

- in wet conditions
- slippery road surfaces
- in fog
- temporary restrictions
- exits
- restrictions for car/trailer combinations

Traffic Sign Assist also uses data from the digital street map on the navigation system. When you leave or enter a municipality or change roads, on a highway exit or slip road forexample, or after you turn at a intersection, the display on the driver display can thus be updated without a traffic sign having been detected.

ⓘ Regularly update the digital road map of the navigation system to ensure optimum functioning of Traffic Sign Assist (→ page 33).

If Traffic Sign Assist cannot determine the currently applicable maximum permissible speed (e.g. due to a lack of signage), the following display appears in the driver display:

Traffic Sign Assist is not available in all countries. This display is shown permanently in the vehicle when you are traveling in countries that do not support Traffic Sign Assist.

If the system is temporarily or permanently unavailable due to a technical malfunction or soiling of the windshield, a corresponding display message appears in the driver display. The Traffic Sign Assist warning lamp also lights up in the driver display in certain countries.

ⓘ Please also note the information on the display messages from Traffic Sign Assist (→ page 777).

Warning when the maximum permissible speed is exceeded

The system can warn you if you unintentionally exceed the maximum permissible speed. Depending on the country, you can set how much the maximum permissible speed may be exceeded on the multimedia system before a warning is issued. You can switch off the warning, or select in the settings whether the warning should be issued optically, with the traffic sign flashing in the driver display, or as a combination of optic and acoustic warning. Selection of the type of warning is confirmed via an indication in the driver display, depending on the respective country of use.

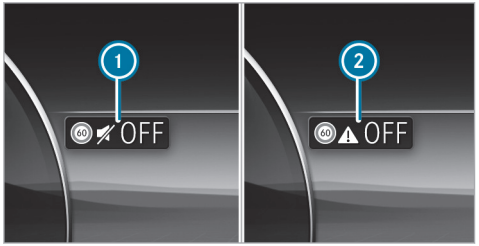

1 Optical warning only
2 WARNING off

ⓘ The type, duration and deployment stages of the speed limit warning, as well as the option of setting the timing of the deployment stages upon which the warning is issued, are subject to legislation valid for the respective country in which the vehicle is delivered.

Additional functions of Traffic Sign Assist (country-specific)

Warning for no-entry signs: Traffic Sign Assist can warn you if you drive the wrong way down a section of road, forexample, on highway slip roads or one-way streets.

Warning at pedestrian crossings: if you approach pedestrian crossings, provided that pedestrians are in the danger zone or are moving towards it, Traffic Sign Assist can warn you up to a speed of approximately 44 mph (70 km/h).

Warning at stop signs: Traffic Sign Assist can warn you up to a speed of approximately 44 mph (70 km/h) if you are about to drive past a stop sign unintentionally. For this to be possible, the signs must be clear. For example, if the system detects more than one stop sign, a stop sign can be confirmed using the digital navigation map. No warning can be issued if several different signs are detected.

Warning at red lights: Traffic Sign Assist can warn you up to a speed of approximately 44 mph (70 km/h) if you are about to drive through a red light unintentionally.

The following conditions must be fulfilled:

- Several traffic lights have been detected.
- All traffic lights detected are red.

- At least one of the red traffic lights detected is on the front passenger side beside the vehicle's lane.
- The traffic lights are in the following sequence (from top to bottom): red, yellow, and green.

ⓘ Where available, you can turn the warnings on and off in the Traffic Sign Assist menu under Further Warnings(→ page 346).

System limits

The system may be impaired or inoperative in the following situations in particular:

- If visibility is poor, e.g. due to insufficient illumination of the road, highly variable shade conditions, rain, snow, fog, swirling dust or heavy spray.
- If there is glare, e.g. from oncoming traffic, direct sunlight or reflections.
- if there is soiling on the windshield in the vicinity of the multifunction camera or if the camera is fogged up, damaged or obscured.
- If the traffic signs are difficult to see because, forexample, they are dirty, obscured, faded, iced over, damaged, inconveniently positioned, insufficiently illuminated or askew.
- Active traffic signs with LED displays may not be detected correctly, or even at all due to technical factors suchas transmission frequency.
- If the information on the navigation system's digital map is incorrect, incomplete or out of date.
- If the signs, road markings or road layout are ambiguous, e.g. traffic signs at road works, at exits and slip roads, adjacent lanes or parallel roads, and pedestrian crossing markings at traffic lights.
- If the signage or road markings do not comply with the standard.
- If the signage, road markings, or road guidance is country-specific and deviates from the navigation system's route guidance, e.g. at or after road works.
- After sharp turns and tight bends, if traffic signs are outside the camera's field of vision.
- If you overtake vehicles with traffic signs affixed or attached to them.
- If you use transport equipment secured to the vehicle with a trailer coupling, suchas a bicycle rack, restrictions for vehicle/trailer combinations may be considered valid if applicable.

Setting Traffic Sign Assist

Multimedia system:

→ [⌂] ▸▸ Settings ▸▸ Assistance ▸▸ Assistance ▸▸ Traffic Sign Assist

Activating or deactivating the speed warning

▶ Switch off Speed Limit Warning.
Following country-specific legislation, the speed warning will remain off until the next time the vehicle is switched on or off and the driver's door is opened (depending on the equipment).

Change the type of speed warning

▶ Change the warning to Visual or Visual & Audible.

Setting the warning threshold

This value determines the speed at which a warning is issued when exceeded.

▶ Set the desired speed under Warning Threshold.

Activating or deactivating further functions of Traffic Sign Assist

▶ Switch Further Warnings on or off.
The available functions are switched on or off.

Set the type of warning for other functions

▶ Select Visual or Visual & Audible.

Blind Spot Assist and Active Blind Spot Assist

Function of Blind Spot Assist and Active Blind Spot Assist with exit warning

Blind Spot Assist and Active Blind Spot Assist use radar sensors to monitor the area up to 130 ft (40 m) behind and 10 ft (3 m) next to your vehicle.

The system can detect vehicles from a speed of approximately 8 mph (12 km/h) and issue a warning if they move into the monitoring range.

Status display on the driver's display

Gray: the system is activated but not operational.

Green: the system is activated and operational.

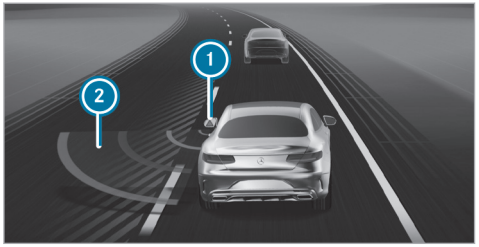

Display on the driver's display in the Assistance menu

1. Warning lamp in the outside mirror
2. Red radar waves

If a vehicle is detected from approximately 8 mph (12 km/h) and this vehicle enters the warning range immediately afterwards, the warning lamp in the corresponding outside mirror will light up red. In the Assistance menu, the lamp in outside mirror 1 will also light up red, and the lane in which the vehicle is detected will be hatched out.

If a vehicle is detected in the warning range and you switch on the turn signal indicator in the corresponding direction, a double warning tone will sound once and the warning lamp in the corresponding outside mirror will flash red. Red radar waves 2 will be displayed next to your vehicle on the assistant display.

If the turn signal indicator remains on, the display in the outside mirror will flash for all other detected vehicles, but no further warning tone will sound. If you overtake a vehicle quickly, no warning will be given.

ⓘ **Vehicles with active ambient lighting:** if Warning Support is activated, the warning will also be highlighted by the ambient lighting (→ page 202).

Observe the notes on driving systems and your responsibility; you may otherwise fail to recognize dangers (→ page 303).

WARNING Risk of accident despite Blind Spot Assist

Blind Spot Assist does not react to vehicles approaching and overtaking you at a greatly different speed.

Blind Spot Assist cannot warn drivers in this situation.

▶ Always pay careful attention to the traffic situation and maintain a safe distance at the side of the vehicle.

WARNING Risk of accident despite Active Blind Spot Assist

Active Blind Spot Assist does not react to the following:

- if you overtake a vehicle too closely so that it is in the blind spot area
- if vehicles traveling at a much faster speed approach and then overtake

Active Blind Spot Assist may not give warnings or intervene in such situations.

▶ Always pay careful attention to the traffic situation and maintain a safe distance at the side of the vehicle.

Exit warning

The exit warning is an additional function of Blind Spot Assist and Active Blind Spot Assist and can warn vehicle occupants attempting to leave a stationary vehicle about approaching vehicles.

WARNING Risk of accident despite exit warning

The exit warning neither reacts to stationary objects nor to persons or road users approaching you at a greatly differing speed.

The exit warning cannot warn drivers in these situations.

▶ Always pay particular attention to the traffic situation when opening the doors and make sure there is sufficient clearance.

If a vehicle is detected in the monitoring range, the warning lamp in the corresponding outside mirror will light up red.

If a vehicle occupant pulls the door handle on the side for which the warning is issued, a warning tone will sound twice and the ambient lighting in the respective door and the warning lamps in the corresponding outside mirror will flash red.

ⓘ **Vehicles with ambient lighting or active ambient lighting:** the Warning Support provided by the ambient lighting can be activated and deactivated (→ page 202).

ⓘ The warning assistance can differ depending on the equipment and may vary according to the setting.

The exit warning is available only when Blind Spot Assist or Active Blind Spot Assist is active.

After the vehicle is switched off, the exit warning continues to function for a few minutes. When the outside mirror warning lamp flashes three times, the exit warning is no longer available.

The exit warning is only an aid and not a substitute for the attention of vehicle occupants. The

responsibility when opening the doors and leaving the vehicle remains with the vehicle occupants.

System limits

Blind Spot Assist and Active Blind Spot Assist may be limited in the following situations in particular:

- If there is dirt on the sensors or the sensors are obscured
- In poor visibility, e.g. due to fog, heavy rain or snow
- If there are narrow vehicles, e.g. bicycles or motorbikes
- If the road has very wide or narrow lanes
- If vehicles are not driving in the middle of their lane

Warnings may be issued in error when you drive close to crash barriers or similar structural lane borders. Always make sure that there is sufficient distance at the sides for other traffic or obstacles.

Warnings may be interrupted when you drive alongside long vehicles, such as trucks, for a prolonged time.

Blind Spot Assist and Active Blind Spot Assist are not operational when reverse gear is engaged.

Blind Spot Assist and Active Blind Spot Assist will not be operational if transport equipment, for example a trailer or bicycle rack, is attached to the trailer hitch and the electrical connection has been correctly established.

Additionally, the exit warning may be limited in the following situations:

- When the sensors are covered by adjacent vehicles in narrow parking spaces
- When people approach the vehicle
- In the event of stationary or slow moving objects

You can watch an animation on this topic via the following link:

Function of braking intervention by Active Blind Spot Assist

ⓘ The brake application function is available only for vehicles with a Driving Assistance Package.

If Active Blind Spot Assist detects a risk of a side impact in the monitoring range, a course-correcting brake application is carried out. This is designed to help you avoid a collision.

The course-correcting brake application is available in the speed range between approximately 20 mph (30 km/h) and approximately 125 mph (200 km/h).

⚠ **WARNING** Risk of accident despite brake application of Active Blind Spot Assist

A course-correcting brake application cannot always prevent a collision.

▶ Always steer, brake or accelerate yourself, especially if Active Blind Spot Assist warns you or makes a course-correcting brake application.

▶ Always maintain a safe distance at the sides.

WARNING Risk of accident despite Active Blind Spot Assist

Active Blind Spot Assist does not react in the following situations:

- If you overtake vehicles at a high speed.
- If vehicles approach and overtake you at a greatly different speed.

Active Blind Spot Assist may not give warnings or intervene in such situations.

▶ Always pay careful attention to the traffic situation and maintain a safe distance at the side of the vehicle.

If a course-correcting brake application occurs, the red warning lamp flashes in the outside mirror and a warning tone sounds. In addition, a display ① indicating the danger of a side collision appears in the driver display.

In rare cases, the system may make an inappropriate brake application. This brake application may be interrupted at any time if you steer slightly in the opposite direction or accelerate.

System limits

Note the system limitations of Active Blind Spot Assist; you may otherwise not recognize the dangers (→ page 347).

Either a course-correcting brake application appropriate to the driving situation, or none at all, may occur especially in the following situations:

- Vehicles or obstacles, e.g. crash barriers, are located on both sides of your vehicle.
- A vehicle approaches too closely on the side.
- You have adopted a sporty driving style with high cornering speeds.
- You brake or accelerate significantly.
- A driving safety system intervenes, e.g. ESP® or Active Brake Assist.
- ESP® is deactivated.
- A loss of tire pressure or a defective tire is detected.
- Transport equipment, e.g. a trailer or bicycle rack, is attached to the trailer hitch and the electrical connection has been correctly established.

Activating/deactivating Blind Spot Assist or Active Blind Spot Assist

Multimedia system:

→ ⌂ ▸▸ Settings ▸▸ Assistance ▸▸ Collision Avoidance

▶ Switch Active Blind Spot Assist on or off.

Active Lane Keeping Assist

Function of Active Lane Keeping Assist

Active Lane Keeping Assist monitors the area in front of your vehicle by means of a multifunction camera, (→ page 303) and can protect you from leaving your lane unintentionally. The system can

guide you back into your lane by course-correcting steering intervention, and warn you with tangible steering wheel feedback.

Active Lane Keeping Assist is available in the speed range between 37 mph (60 km/h) and 124 mph (200 km/h).

The system can intervene if the following conditions are met:

- Active Lane Keeping Assist detects a lane marking.
- One of your front wheels moves onto this lane marking.

If you activate the direction indicators, there is no steering intervention on that side.

There is no steering intervention if you leave your lane without activating the direction indicators but there is a risk of collision with a moving obstacle in your own lane.

Vehicles with Blind Spot Assist or Driving Assistance Package: If the system detects an obstacle, e.g. another vehicle, in the adjacent lane, there is steering intervention despite the direction indicators.

In the following cases a warning (1) appears in the driver display and a warning tone is sounded:

- a steering intervention by Active Lane Keeping Assist has a duration longer than approximately ten seconds.
- there are two or more steering interventions by the systems within approximately three minutes, without steering action by the driver.

You can set the sensitivity of the system in the Active Lane Keeping Assist settings, to determine the level of assistance. You can also determine whether the system is to react to interrupted lane markings or only to solid lane markings (→ page 353).

F254 0138 13

If ATTENTION ASSIST has detected signs of drowsiness, the most sensitive setting is automatically selected (→ page 315).

Status displays of Active Lane Keeping Assist

White: Active Lane Keeping Assist is switched off.

If ESP® is switched off or a tire pressure loss warning is given, Active Lane Keeping Assist is automatically switched off.

Yellow: There is a malfunction. Also note any display messages.

Gray: Active Lane Keeping Assist is switched on but not ready.

Green: Active Lane Keeping Assist is switched on and ready. If the system is ready only on one side, only the lane marking on that side is shown in green.

Red: Active Lane Keeping Assist has guided you back into your lane by course-correcting steering intervention. If a tangible warning is also given at the steering wheel, the status display flashes. Only the lane

marking on the warning side is shown in red.

Vehicles without Driving Assistance Package: If both lane markings are shown in red in the status display at the same time, Active Lane Keeping Assist has initiated an emergency stop (→ page 331).

Display in the driver display in the menu Assistance

If one of your front wheels moves onto a recognized lane marking, this is highlighted in red in the Assistance menu in the driver display.

ⓘ **Vehicles with active ambient lighting:** If Warning Support is switched on, the warning by Active Lane Keeping Assist is reinforced by the ambient lighting (→ page 202).

System limits

In the following situations, there may be no course-correcting steering intervention but a warning may be given at the steering wheel depending on the situation:

- if you clearly and actively steer, brake or accelerate.
- if a driving safety system is intervening, e.g. ESP® or Active Brake Assist
- if you have adopted a sporty driving style with high cornering speeds or high rates of acceleration.
- if transport equipment, for example a trailer or bicycle rack, is attached to the trailer hitch and the electrical connection has been correctly established.

The system may be impaired or inoperative in the following situations in particular:

- if there is poor visibility, e.g. owing to insufficient road illumination, highly variable shade conditions, rain, snow, fog or heavy spray.
- if there is glare, e.g. from oncoming traffic, direct sunlight or reflections.
- if there is dirt on the windshield in the vicinity of the multifunction camera, or if the camera is fogged up, damaged or obscured.
- if the bumper is dirty in the area of the radar sensors, or if these are damaged or obscured
- if there are no lane markings, or several unclear lane markings are present for one lane, e.g. around roadworks.
- if the lane markings are worn, dark or covered.
- If the distance to the vehicle in front is too short and the lane markings cannot therefore be detected.
- if the lane markings change quickly, e.g. lanes branch off, cross one another or merge.
- if the road is very narrow and winding.

Observe the notes on driving systems and your responsibility; you may otherwise fail to recognize potential dangers (→ page 303).

Activating/deactivating Active Lane Keeping Assist

Multimedia system:

→ [⌂] ▸▸ Settings ▸▸ Assistance ▸▸ Collision Avoidance ▸▸ Active Lane Keeping Assist

▶ Activate or deactivate the function.

Alternatively, Active Lane Keeping Assist can be activated and deactivated via the quick vehicle access [🚗].

ⓘ The settings after the vehicle is started are country-specific.

Setting Active Lane Keeping Assist

Multimedia system:

→ [⌂] ▸▸ Settings ▸▸ Assistance ▸▸ Collision Avoidance ▸▸ Active Lane Keeping Assist

Setting the sensitivity

▶ Select [⚙].

▶ Select Early, Med. or Late.

The last selected setting will be adopted the next time the vehicle is started.

ⓘ The standard setting of this function is country-dependent.

Activating or deactivating assistance with dashed lane markings

▶ Select Advanced Support.

The last selected setting will be adopted the next time the vehicle is started.

ⓘ The standard setting of this function is country-dependent.

ⓘ This function must be activated in vehicles without the Driving Assistance Package so that Emergency Stop Assist is fully available. Further information on Emergency Stop Assist (→ page 331)

AMG adaptive sport suspension system

Function of AMG RIDE CONTROL

AMG RIDE CONTROL is an electronically controlled damping system for improved driving comfort and increased driving safety.

The damping is adjusted individually to each wheel and depends on the following factors:

- Driving style, e.g. sporty
- Road condition, e.g. bumps
- Individual selection of **SPORT**, **SPORT +** or **COMFORT**

The suspension tuning is dependent on the selected drive program.

In addition, you can select the setup individually in any drive program with the AMG steering wheel button (→ page 354). The automatic suspension

tuning is active again after a change in drive programs.

ⓘ When the vehicle is started again, the **COMFORT** setting is activated automatically.

Selecting the suspension setting

ⓘ You can also adjust the suspension setting via the multimedia system (→ page 260).

You can select from three different suspension settings:

- **COMFORT** ensures a comfortable suspension setting. Select this suspension setting if you prefer a comfortable driving style.
- **SPORT** ensures a firmer suspension setting. Select this suspension setting when employing a sporty driving style, e.g. on winding country roads.
- **SPORT +** ensures a very firm suspension setting.

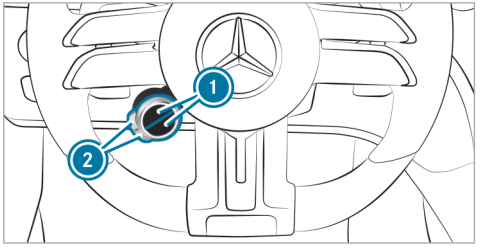

▶ Press the upper or lower ① display button repeatedly, until it displays the [ ] symbol.

ⓘ If the display button does not show the symbol, then it is hidden. How functions are displayed and the order in which they are displayed can be set in the multimedia system (→ page 253).

▶ Press corresponding button ②.
The selected suspension setting is shown in the driver's display as a message.

The [ ] symbol indicates the currently selected mode:

- [ ] (blue): COMFORT
- [ ] (yellow): SPORT
- [ ] (red): SPORT +

AMG ACTIVE RIDE CONTROL

Function of AMG ACTIVE RIDE CONTROL

AMG ACTIVE RIDE CONTROL additionally supplements the functions of AMG RIDE CONTROL with an active roll stabilisation system. Depending on the selected drive program, the suspension setting is adapted to the driving situation by influencing the vehicle's roll behaviour with active stabilisers. As a result, the driving comfort and safety of the vehicle are noticeably improved. The stabilisers on the front and rear axle can also be controlled separately to make the handling more dynamic.

Suspension setting per drive program

Drive programs [ ], [C], [EL] and [B]:

- The lean is reduced during cornering.
- Roll movements caused by uneven road surfaces are compensated for.

Drive programs [S] and [S+]:

- The lean is significantly reduced during cornering.
- Roll movements caused by uneven road surfaces are compensated for.
- [S+] and [ ]: the driving characteristics become even more agile through targeted interventions.

Drive program [I*]

- Individual settings of the suspension setting via AMG DYNAMICS
  - Basic: reduction of lean during cornering
  - Advanced: increased reduction of lean during cornering
  - Pro: significantly increased reduction of lean during cornering

RACE START

Information on RACE START

ⓘ RACE START is available only for Mercedes-AMG vehicles.

ⓘ RACE START is available only for the **Mercedes-AMG GLC 63 S E Performance** model and for vehicles with the **AMG DYNAMIC PLUS package**.

RACE START enables optimal vehicle acceleration from a standstill. For this, a suitably high-grip road surface is required, and the tires and vehicle must also be in good condition.

ⓘ Use RACE START only after the vehicle has been broken in.

ⓘ RACE START must not be used in normal road operation. RACE START may be activated and used only on dedicated race circuits, not on public roads.
Read the safety notes and information on ESP® (→ page 307).

⚠ **WARNING** Risk of skidding and having an accident from wheels spinning

If you use RACE START, depending on the ESP® mode selected, there is an increased risk of skidding and having an accident.

▶ Make sure that no persons or obstacles are in the close vicinity of your vehicle.

Activating RACE START

⚠ **WARNING** Risk of skidding and having an accident from wheels spinning

If you use RACE START, depending on the ESP® mode selected, there is an increased risk of skidding and having an accident.

▶ Make sure that no persons or obstacles are in the close vicinity of your vehicle.

Requirements

- The vehicle is switched on and the transmission and the engine are at normal operating temperature.
- The driver's door is closed.
- The front wheels are in the straight-ahead position.
- The vehicle is on level ground.

- The vehicle is stationary, the brake pedal is depressed (left foot) and the parking brake is released.
- The transmission is in position D.
- One of the S, S+ or drive programs is selected (→ page 255).

ⓘ RACE START must not be used in normal road operation. RACE START may be activated and used only on dedicated race circuits, not on public roads.
Read the safety notes and information on ESP® (→ page 307).

▶ Rapidly depress the accelerator pedal fully. The engine speed will increase.

ⓘ If the activation conditions are not fulfilled, RACE START cannot be used. The RACE START Not Possible See Operator's Manual message will appear on the driver display.

▶ The RACE START Release Brake to Start message will appear on the driver display.

ⓘ In this phase, you can adjust RACE START depending on the road conditions. You can vary the engine speed by pulling on one of the steering wheel paddle shifters. The segments on the driver display will flicker rapidly.

ⓘ If the brake pedal is not released after a short while, RACE START will be canceled. The RACE START Canceled message will appear on the driver display.

▶ Take your foot off the brake, but keep the accelerator pedal depressed.
The vehicle will pull away at maximum acceleration. The RACE START Active message will appear on the driver display.

RACE START will be deactivated immediately if you release the accelerator pedal during RACE START or if any of the activation conditions is no longer fulfilled. The RACE START Canceled message will appear on the driver display.

ⓘ After being used several times in short succession, RACE START will be unavailable until a certain distance has been driven.

Boost Strategy

Function of Boost Strategy

ⓘ Boost Strategy is only available for the **Mercedes-AMG GLC 63 S E Performance** model.

Boost Strategy is used to increase performance on a race track and can only be selected in drive program .

Boost Strategy is part of AMG TRACK PACE and can be activated either via the steering wheel button (→ page 357) or via the settings for Track Race (→ page 455).

You can set the energy flow and thus the energy supply of the electric drive power depending on the length of the race and its track characteristics.

For long races, activate Boost Strategy to use the maximum boost effect as needed exclusively via kickdown. Deactivate Boost Strategy for short races to always use the maximum electrical power.

Activating/deactivating Boost Strategy with the steering-wheel button

Requirements

- Drive program [ ] is selected (→ page 255).
- The state of charge of the high-voltage battery is sufficient.

ⓘ You can also activate or deactivate Boost Strategy via the Track Race settings (→ page 455).

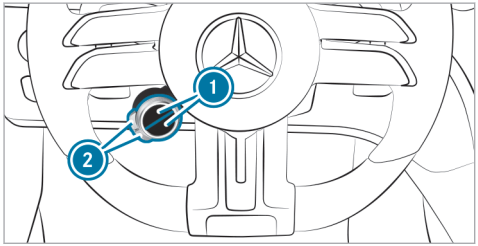

▶ Press upper or lower display button ① repeatedly, until it displays the [BOOST] symbol.

ⓘ If the display button does not show the symbol, then it is hidden. How functions are displayed and the order in which they are displayed can be set in the multimedia system (→ page 253).

ⓘ If the display is grayed out, the requirements for Boost Strategy are not met and it is not possible to activate the function.

▶ Press corresponding button ②.

The symbol shows the current status:

- [BOOST] (blue): Boost Strategy is activated
- [BOOST] (yellow): Boost Strategy is deactivated

When Boost Strategy is activated, the driver's display also shows the [BOOST] symbol in blue.

With an active boost process via kickdown, the **BOOST** message appears in the driver's display and the [BOOST] symbols in the driver's display and on the display button light up yellow

Rear view camera

Function of the rear-view camera

The rear-view camera serves solely as an aid. It is not a substitute for you having to pay attention to your surroundings. The responsibility for safe maneuvering and parking remains with you. Ensure that no persons, animals, objects, etc. are in the maneuvering area while maneuvering and parking.

ⓘ The area behind the vehicle is displayed as a mirror image, as it would appear in the inside rearview mirror.

The following camera perspectives are available in the central display:

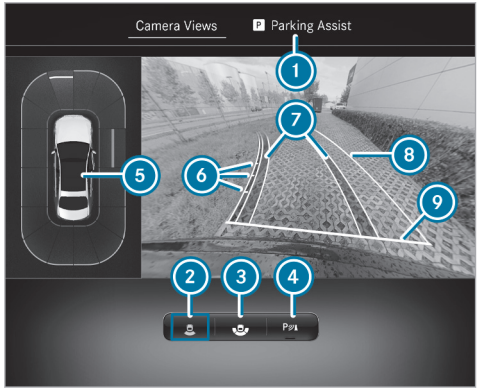

Menu Camera Views (Top View)

1. Menu Parking Assistance
2. Rear-view camera with Top View
3. Wide-angle view
4. Activate/deactivate Parking Assist PARKTRONIC (→ page 369)
5. Warning display of Parking Assist PARKTRONIC (→ page 366)
6. Guide lines at a distance of approximately 1.6 ft (0.5 m), 3.3 ft (1.0 m), 5 ft (1.5 m) and 9.9 ft (3.0 m) from the rear area
7. Lane marking the course the tires will take with the current steering angle (dynamic)
8. Driven surface depending on the current steering angle (dynamic)
9. Guide line at a distance of approximately 1.0 ft (0.3 m) from the rear area

ⓘ When Active Parking Assist is active, paths 7 are displayed in green (→ page 369).

Wide-angle view

5. Warning display of Parking Assist PARKTRONIC (→ page 366)

System limits

If the system is not ready for operation, the System Inoperative message appears on the central display.

The rear-view camera will not function or will function only partially in the following situations:

- You are driving forwards at a speed greater than approximately 10 mph (16 km/h).
- The tailgate is open.
- The weather conditions are poor, e.g. heavy rain, snow, fog, storm or spray.
- The ambient light is poor, e.g. at night or if a light is shining into the camera.
- The camera lens is obstructed, dirty or fogged up. Observe the notes on cleaning the rear-view camera (→ page 570).
- The camera or rear of your vehicle is damaged. In this case, have the camera and its position and setting checked at a qualified specialist workshop.

ⓘ Do not use the rear-view camera in these types of situations. You could otherwise injure others or collide with objects when parking the vehicle.

The field of vision and other functions of the camera system may be restricted due to additional vehicle attachments (e.g. license plate bracket or bicycle rack).

ⓘ The contrast of the display may be impaired by direct sunlight or by other light sources, e.g. when driving out of a garage. Particular attention must be afforded in this case.

ⓘ Have the display repaired or replaced if, forexample, its use is considerably restricted due to pixel errors.

Observe also the information on vehicle sensors and cameras (→ page 303).

360° camera

Function of the 360° camera

The 360° camera is a system comprising four cameras which cover the immediate vehicle surroundings. The cameras support you, for example, when parking or when exits are difficult to see.

The 360° camera includes the following cameras and evaluates their images:

- Rear-view camera
- Front camera
- Two outside mirror cameras

The cameras serve solely as aids and may show a distorted view of obstacles, show them incorrectly or even omit them altogether. They are not a substitute for you having to pay attention to your surroundings. The responsibility for safe maneuvering and parking remains with you. Ensure that there are no persons, animals, objects, etc. in the maneuvering area while maneuvering and parking.

The following camera perspectives are available in the central display:

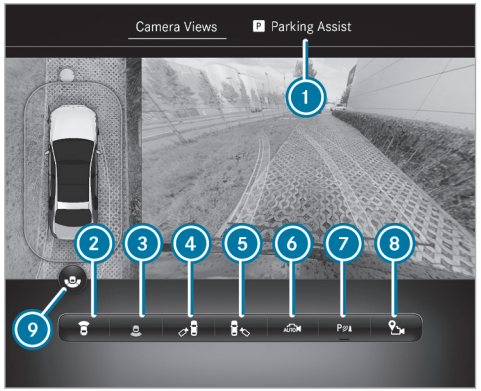

Overview of menu Camera Views

1. Menu Parking Assistance
2. Top view with image from the front camera
3. Top view with image from the rear-view camera
4. 3D view left side of the vehicle
5. 3D view right side of the vehicle
6. 3D auto view
7. Activating/deactivating Parking Assist PARKTRONIC (→ page 369)
8. Set the GPS activation point (→ page 365)
9. Switch between standard and wide-angle view

ⓘ The warning display of the Parking Assist PARKTRONIC is shown in all views (→ page 366).

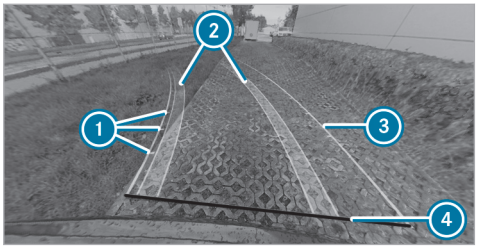

Function of the guide lines

1. Guide lines at a distance of approximately 1.6 ft (0.5 m), 3.3 ft (1.0 m), 5 ft (1.5 m) and 9.9 ft (3.0 m) from the rear area
2. Lane marking the course the tires will take with the current steering angle (dynamic)
3. Driven surface depending on the current steering angle (dynamic)
4. Guide line at a distance of approximately 1.0 ft (0.3 m) from the rear area

ⓘ When Active Parking Assist is active, lanes and guidelines are displayed in green instead of yellow (→ page 369).

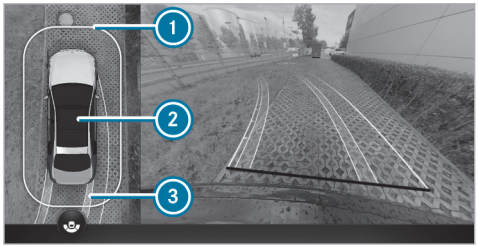

Top view with the image from the front or rear-view camera

1. Warning display of Parking Assist PARKTRONIC (→ page 366)
2. Your vehicle from above
3. Lane indicating the route the vehicle will take at the current steering angle

WARNING Risk of accidents due to objects not being displayed or being displayed in a distorted manner

Due to the projection of the cameras, objects in the 3D views may be strongly distorted or not displayed at all.

▶ Make sure that there are no persons, animals or objects etc., in the maneuvering area while maneuvering and parking.

3D view, left/right-hand side of the vehicle

1. Display of Parking Assist PARKTRONIC (→ page 366)

In the 3D view, left/right-hand side of the vehicle, the virtual camera moves to the respective side of the vehicle. When you change the transmission position, the view is automatically adapted.

ⓘ The area behind the vehicle is **not** displayed as a mirror image as is usual in the 3D views.

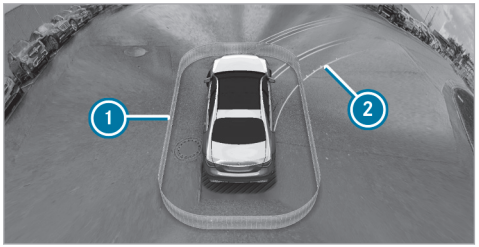

3D auto view

1. Display of Parking Assist PARKTRONIC (→ page 366)
2. Guide lines

In the 3D auto view, the virtual camera moves to the standard perspective, facing forward from the rear above the roof. The view changes automatically when approaching obstacles.

If you touch the touchscreen, the view changes to a 3D view with free rotation. You can turn, tilt and zoom the views by touch.

Wide-angle view

1. Display of Parking Assist PARKTRONIC (→ page 366)
2. Switch between standard and wide-angle view

If you select the trailer view and no trailer is coupled to the vehicle, the following display appears:

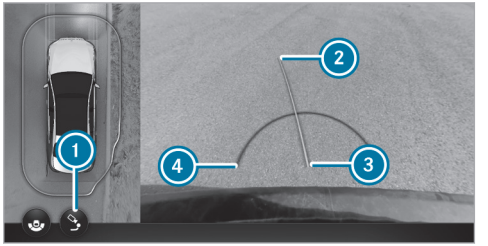

Trailer view

1. Switch between standard and trailer view
2. Yellow guide line, locating aid
3. Ball head of the trailer hitch
4. Red guide line at a distance of approximately 1.0 ft (0.3 m) from the ball head of the trailer hitch

ⓘ In trailer mode, the guide lines are shown at the level of the trailer hitch.

When the electrical connection is established between the vehicle and the trailer, the display changes to the side camera view.

Side view of outside mirror cameras in trailer view

1. Switch to the side view of the outside mirror cameras

System limits

If the system is not ready for operation, the System Inoperative message appears on the central display.

⚠ WARNING Risk of accident due to restrictions in the function of the 360° camera

If the function of the 360° camera is restricted, there is a risk of collision with people or objects.

- ▶ Do not use the 360° camera in the event of function restrictions.
- ▶ Make sure that there are no persons, animals or objects etc., in the maneuvering area while maneuvering and parking.

The 360° camera will not function or will only partially function in the following situations:

- You are driving forwards at a speed greater than approximately 10 mph (16 km/h).
- The doors are open.
- An outside mirror is not completely extended.
- The tailgate is open.
- The weather conditions are poor, e.g. heavy rain, snow, fog, storm or spray.
- The ambient light is poor, e.g. at night or if a light is shining into the camera.
- The camera lens is obstructed, dirty or fogged up. Refer to the notes on cleaning the 360° camera (→ page 570).
- If cameras or vehicle components in which the cameras are installed are damaged. In this event, have the cameras, their positions and their setting checked at a qualified specialist workshop.

For technical reasons, the standard height of the vehicle may be altered if the vehicle is carrying a heavy load and can result in inaccuracies in the guide lines and in the display of the generated images.

The field of vision and other functions of the camera system may be restricted due to additional vehicle attachments (e.g. license plate bracket or bicycle rack).

ⓘ Contrast of the display may be impaired by abrupt, direct sunlight or other light sources, e.g. when driving out of a garage. Particular attention must be afforded in this case.

ⓘ Have the display repaired or replaced if, forexample, its use is considerably restricted due to pixel errors.

Observe also the information on vehicle sensors and cameras (→ page 303).

Off-road function of the 360° camera

The 360° camera can assist you with different views when you drive off road.

The following views are available:

- Transparent hood
- Front view
- Rear view

To call up the function, call up the off-road menu in the multimedia system (→ page 458).

ⓘ Active Parking Assist, Parking Assist PARKTRONIC and the maneuvering assistant functions are not available in the drive program. Please also note the system limits of the respective functions.

Transparent hood

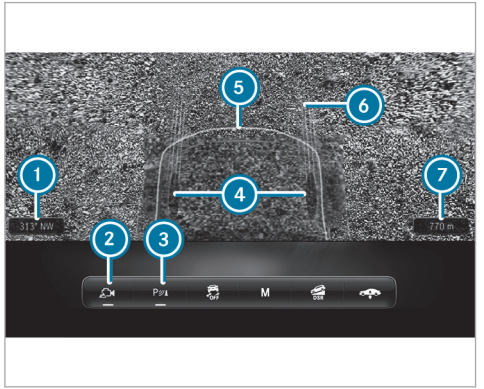

Transparent hood display (example)

1. Cardinal point
2. Switch camera perspective on/off
3. Activate/deactivate Parking Assist PARKTRONIC (→ page 366)
4. Positions of the wheels
5. Area under the hood
6. Lane indicating the route the vehicle will take at the current steering angle
7. Elevation above sea level

If the off-road menu is open on the central display and button 2 is switched on, the transparent hood view will automatically be displayed in transmission position D.

The transparent hood view shows a virtual image of the area directly in front of the bumper, in front of the tires and under the hood. The current lane is also displayed. The transparent hood can assist you when you drive over difficult terrain, e.g. on rocky or uneven ground.

The front camera captures and records the shaded area under the hood 5. This area will then be shown as soon as it has been traversed by the vehicle. If the vehicle has not moved for some time, the recorded area will be displayed in grayscale and faded out.

Front and rear view

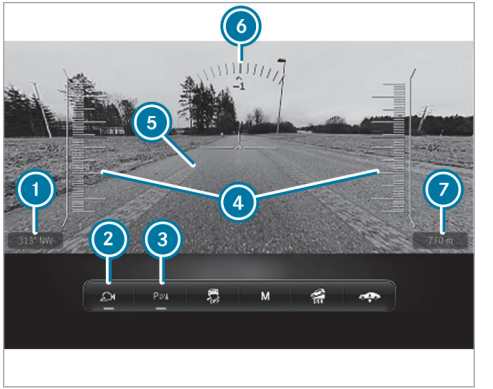

Front and rear view display (example)

1. Cardinal point
2. Switch camera perspective on/off
3. Activate/deactivate Parking Assist PARKTRONIC (→ page 366)
4. Pitch indicator

⑤ Lane indicating the route the vehicle will take at the current steering angle
⑥ Roll indicator
⑦ Elevation above sea level

ⓘ Note that the area between the vehicle and up to approximately 40 in (1 m) in front of the vehicle is not displayed.
The pitch and roll indicators are shown only in the front view.

If the vehicle is traveling faster than approximately 5 mph (8 km/h), the view will automatically change from transparent hood to front view. The camera image will be closed if the vehicle is traveling faster than approximately 12 mph (20 km/h) - 19 mph (30 km/h) (depending on the drive program).

The rear-view camera image will automatically be displayed when you engage reverse gear.

System limits

The area under the hood may not be displayed correctly in the following situations:

- in the rain
- in the dark
- when shadows fall on the area recorded by the camera

Observe the instructions on the 360° camera's function and its system limits. Otherwise, you may fail to recognize potential dangers (→ page 359).

Calling up the 360° camera views using the button

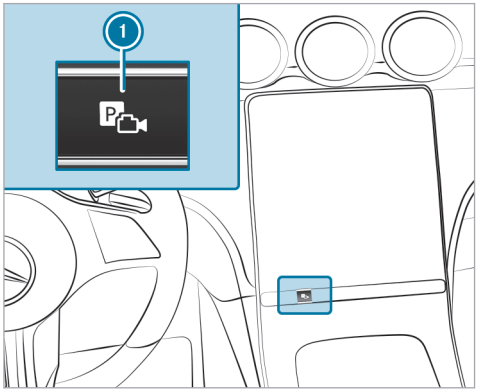

F254 0138 13

▶ Press button ①.
▶ Select Camera Views menu.
▶ Select the desired view in the multimedia system (→ page 359).

Selecting a view for the 360° camera (reverse gear)

▶ Engage reverse gear.
▶ Select the desired view in the multimedia system (→ page 359).

360° Camera with GPS - managing activation positions

Multimedia system:

→ [⌂] ▸▸ Settings ▸▸ Assistance ▸▸ Camera

Renaming an activation position

ⓘ You can determine activation positions in the Camera Views menu. (→ page 359)

▶ [•••] Select for the desired activation position.
▶ Select Edit.

▶ Enter a name and confirm.
The activation position is saved under the new name.

Deleting an activation position

▶ ••• Select for the desired activation position.

▶ Select Delete Entry.

▶ Confirm the prompt.
The activation position is deleted.

Opening the camera cover

Multimedia system:

→ ⌂ ▸▸ Settings ▸▸ Assistance ▸▸ Camera

▶ Select Open Camera Cover.

ⓘ The camera cover closes automatically after some time, or after the vehicle is switched on or off.

Parking Assist PARKTRONIC

Function of Parking Assist PARKTRONIC

Parking Assist PARKTRONIC is an electronic parking assistance system that monitors your vehicle's surroundings. The distance between your vehicle and a detected obstacle is displayed visually and acoustically.

The passive side impact protection also warns you of obstacles to the sides. These must be detected beforehand by the sensors in the front or rear bumper while you are driving by them. If you steer in the direction of a detected obstacle and there is a risk of a lateral collision, a warning will be issued.

Passive side impact protection can be activated and deactivated via the multimedia system (→ page 369).

In order for front or rear obstacles to the side to be displayed, the vehicle must first travel a distance of at least half a vehicle length. Once the vehicle has traveled one vehicle length, obstacles on all sides can be shown.

Parking Assist PARKTRONIC is only an aid. It is not a substitute for your attention to the surroundings. The responsibility for safe maneuvering and parking remains with you. Ensure that there are no persons, animals or objects in the maneuvering area while maneuvering and parking in / exiting parking spaces.

Indicators on the central display

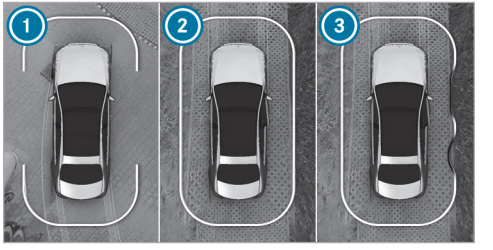

Vehicles with 360° camera

Vehicles with rear-view camera

1. Front and rear ready for display
2. All sides ready for display
3. All sides ready for display and obstacles detected

As soon as Parking Assist PARKTRONIC is ready for display, respective areas ① to ③ of the display will be shown in blue.

The color of the display will change depending on the distance to the detected obstacle:

- **Blue:** > 3.3 ft (1 m) (no obstacles detected)
- **Yellow:** approximately 3.3 ft (1 m) - 2.3 ft (0.7 m)
- **Orange:** approximately 2.3 ft (0.7 m) - 1.3 ft (0.4 m)
- **Red:** < 1.3 ft (0.4 m)

Vehicles with 360° camera: the boundary line will shift dynamically depending on the position and distance of the obstacles detected.

An intermittent warning tone will also sound depending on the distance to the obstacle detected. You can set the timing of the warnings in the multimedia system. In the Warn Early setting, the system will warn you from a distance of 3.3 ft (1 m). In the standard setting, it will do so from a shorter distance of 1.3 ft (0.4 m).

Vehicles with 360° camera

Vehicles with rear-view camera

If you are not on the Camera & Parking menu and an obstacle in the vehicle path is detected, pop-up window ① will appear on the central display if the following requirements are met:

- **Vehicles without Active Parking Assist:** when you are driving at a speed no greater than 8 mph (12 km/h).

- **Vehicles with Active Parking Assist:** when you are driving at a speed no greater than 11 mph (18 km/h).

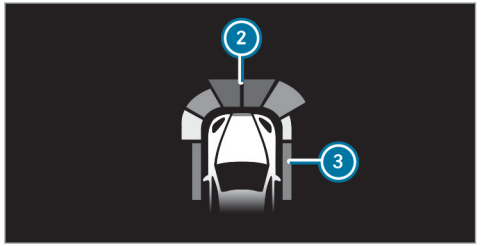

Head-up display (example)

Optionally, obstacles detected by Parking Assist PARKTRONIC from a distance of approximately 3.3 ft (1.0 m) in front ② and 2.3 ft (0.7 m) at the sides ③ can also be shown on the head-up display.

System limits

Parking Assist PARKTRONIC will not necessarily take into account the following obstacles:

- Obstacles below the detection range, e.g. persons, animals or objects.
- Obstacles above the detection range, e.g. overhanging loads, overhangs or loading ramps of trucks.
- Pedestrians or animals approaching the vehicle from the side.
- Objects placed next to the vehicle

Obstacles at the sides will not be shown in the following situations, for example:

- You park the vehicle and switch it off.
- You open the doors.

After the vehicle is restarted, you will need to drive past obstacles to detect them again before a new warning can be issued.

Also observe the system limits of the following systems:

- Rear-view camera (→ page 357)
- 360° camera (→ page 359)

Observe the information on vehicle sensors and cameras; otherwise, the system will not be able to function properly (→ page 303).

Vehicles with trailer hitch: if transport equipment, e.g. a trailer or bicycle rack, is attached to the trailer hitch and the electrical connection is correctly established, Parking Assist PARKTRONIC will be deactivated for the rear zone.

Problems with Parking Assist PARKTRONIC

If the Parking Assist PARKTRONIC display lights up red for approximately three seconds and then goes out, and the [P OFF] symbol appears on the driver display, the system may have been deactivated due to signal interference. Start the vehicle again and check whether Parking Assist PARKTRONIC works in a different location.

If a warning tone also sounds, the causes may be as follows:

- (→ page 570)**The sensors are dirty:** clean the sensors.
- **Parking Assist PARKTRONIC has been deactivated due to a malfunction:** restart the vehi-

cle. If the problem persists, consult a qualified specialist workshop.

Activating/deactivating Parking Assist PARKTRONIC

! NOTE Vehicle damage during parking or maneuvering due to objects at close range

Parking Assist PARKTRONIC may not detect certain objects close to the vehicle.

▶ When parking or maneuvering, look out in particular for objects that are underneath or above the sensors, e.g. flower pots or drawbars. Otherwise, the vehicle or other objects could be damaged.

Requirements

- The camera menu is open.
- Or: the Parking Assist PARKTRONIC pop-up window is displayed.

▶ Tap [P] on the central display.

If the indicator lamp is lit, Parking Assist PARKTRONIC is active. If the indicator lamp does not light up or the symbol [OFF P] is displayed, Parking Assist PARKTRONIC is not active.

ⓘ Parking Assist PARKTRONIC is automatically activated when the vehicle is started.

Alternatively, Parking Assist PARKTRONIC can be activated or deactivated in the quick-access menu.

Setting the warning tones of Parking Assist PARKTRONIC

Multimedia system:

↳ [⌂] ▸▸ Settings ▸▸ Assistance ▸▸ Parking ▸▸ PARKTRONIC

Adjusting warning tones

▶ Select Set Warning Tones.

▶ Set the desired level under Volume or Tone Pitch.

Activating/deactivating audio fadeout

▶ Select Audio Fadeout and switch Audio Fade for Warnings on/off.
The volume of the current media source will be reduced when a Parking Assist PARKTRONIC warning tone is sounding.

or

▶ Select Audio Fadeout and switch Audio Fade-out When in R on/off.
The volume of the currently media source will be reduced when reverse gear is engaged.

Setting warning times

▶ Select Time of Warning.

▶ Set the desired warning time for Front or Rear.

▶ Switch Side Warning on or off.

Active Parking Assist

Function of Active Parking Assist

Active Parking Assist is an electronic parking assistance system that uses ultrasound with the assistance of the rear-view camera and 360°

camera. When you are driving forwards up to approximately 22 mph (35 km/h), the system will automatically measure parking spaces on both sides of the vehicle.

Active Parking Assist serves solely as an aid. It is not a substitute for you having to pay attention to your surroundings. The responsibility for safe maneuvering and parking remains with you. Ensure that no persons, animals or objects etc. are in the maneuvering area.

Active Parking Assist offers the following functions:

Vehicles with rear-view camera

- Parking in parking spaces parallel to the roadway
- Backing up into parking spaces perpendicular to the roadway

The parking space can be freely selected. The vehicle will be parked in reverse.

Vehicles with 360° camera

- Parking in parking spaces parallel to the roadway
- Parking in parking spaces perpendicular to the roadway (either forwards or backing up as desired)
- Parking in parking spaces that can be detected as such only from markings (at the roadside, for example)
- Exiting parking spaces if you have parked using Active Parking Assist

The parking space can be freely selected. The parking direction (forwards or backing up) can also be freely selected, depending on the orientation of the parking space.

If Active Parking Assist is available, the [P] message will appear on the driver's display. When the system detects parking spaces, [◁P▷] will appear. The arrows show the side of the roadway on which available parking spaces are located. These will then be shown on the central display.

When Active Parking Assist is activated, the turn signal indicator will be activated based on the calculated path of your vehicle. The procedure will be assisted by acceleration, braking, steering and gear changes when you enter or exit a parking space.

To start the parking procedure, press the [P] button (→ page 371) or select Active Parking Assist (→ page 423) in the navigation view (e.g. when near the destination).

Active Parking Assist will be canceled in the following situations:

- You press the [P] button again.
- You begin steering.
- You select park position [P].
- You engage the electric parking brake.
- ESP® intervenes.
- You open the driver's door.

System limits

Active Parking Assist will not be available in the [drive program] drive program or if the exterior lighting is malfunctioning.

Also observe the system limits of the following systems:

- Rear-view camera (→ page 357)
- 360° camera (→ page 359)

Objects that are above or below the detection range of Active Parking Assist, e.g. protruding loads, overhangs or loading ramps of trucks or boundaries of parking spaces, will not be detected when the parking space is measured. These will also not subsequently be taken into account when the parking procedure is calculated. In some circumstances, Active Parking Assist may therefore guide you into the parking space prematurely or brake too late.

Certain environmental conditions, such as snowfall or heavy rain, may lead to a parking space being measured incorrectly. Parking spaces that are partially occupied by trailer drawbars may not be identified as such or may be measured incorrectly. Use Active Parking Assist only on level road surfaces with adequate grip.

WARNING Risk of accident due to objects located above or below the detection range of Active Parking Assist

If there are objects above or below the detection range, the following situations may arise:

- Active Parking Assist may steer too early.
- The vehicle may not stop in front of these objects.

There is a danger of collision!

▶ In these situations, do not use Active Parking Assist.

Active Parking Assist can also display unsuitable parking spaces, e.g. parking spaces in which parking is not permitted or parking spaces on unsuitable surfaces.

Do not use Active Parking Assist in the following situations:

- In extreme weather conditions, such as ice, packed snow or heavy rain.
- When transporting a load that protrudes beyond the vehicle.
- If the parking space is on a steep incline.
- When snow chains are installed.
- When a trailer or bicycle rack is attached
- Directly after a tire change or when spare tires are installed.
- If the tire pressure is too low or too high.
- On steep inclines of more than approximately 15%.
- If the vehicle level has been offset, curb mounted on one side (vehicles with level control)

Parking with Active Parking Assist

WARNING Risk of accident due to objects located above or below the detection range of Active Parking Assist

If there are objects above or below the detection range, the following situations may arise:

- Active Parking Assist may steer too early.
- The vehicle may not stop in front of these objects.

There is a danger of collision!

▶ In these situations, do not use Active Parking Assist.

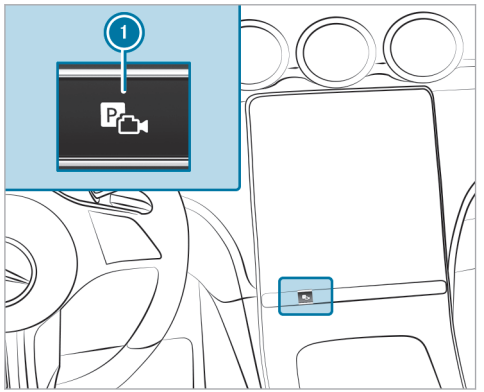

▶ Press button 1.

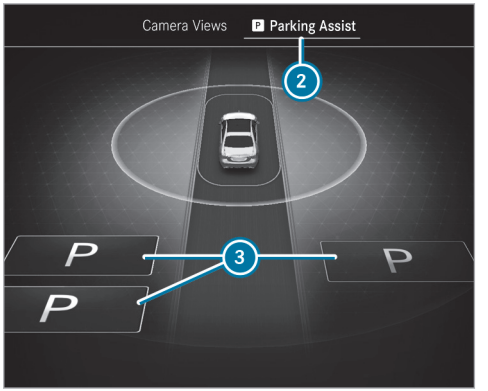

Parking Assistance menu (example)

▶ Select menu Parking Assistance 2.

Parking spaces 3 detected by the system will be shown on the central display.

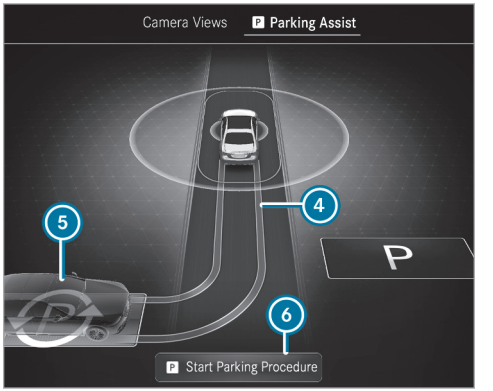

Parking Assistance menu (example)

When the vehicle is stationary, indicated vehicle path 4 into currently selected parking space 5 will also appear.

▶ If a parking space is displayed: stop the vehicle.

▶ If necessary, select another parking space.

- **Vehicles with 360° camera:** to change the parking direction, tap the selected parking space again.
- **To start the parking procedure:** press button ① again.

or

- Depress the brake pedal and select Start Parking Procedure ⑥ (depending on equipment).
- Take your hands off the steering wheel.
  The vehicle will drive into the selected parking space.

The turn signal indicator will be switched on automatically when the parking procedure begins. You are responsible for selecting the turn signal indicator in accordance with the traffic conditions. If necessary, select the turn signal indicator accordingly.

⚠ **WARNING** Risk of accident due to vehicle swinging out while parking or pulling out of a parking space

While parking or exiting a parking space, the vehicle swings out and can drive onto areas of the oncoming lane.

This could cause you to collide with objects or other road users.

- Pay attention to objects and other road users.
- Where necessary, stop the vehicle or cancel the parking procedure with Active Parking Assist.

On completion of the parking procedure, the Active Parking Assist Finished display message will appear.

- Secure the vehicle against rolling away. When necessitated by legal requirements or local conditions: turn the wheels towards the curb.

ⓘ You can stop the vehicle and change the transmission position during the parking procedure. The system will then calculate a new vehicle path. If no new vehicle path is available, the transmission position can be changed again or the process can be canceled.

Immediate parking via the Camera Views menu

- Select the Camera Views menu.
- When the vehicle is stationary and in transmission position R, and symbol ⑦ appears in the camera image: press button ① again.
  The parking procedure will be initiated for the detected parking space.

ⓘ The parking space and parking direction cannot be changed in immediate parking.

Exiting a parking space with Active Parking Assist

WARNING Risk of accident due to objects located above or below the detection range of Active Parking Assist

If there are objects above or below the detection range, the following situations may arise:

- Active Parking Assist may steer too early.
- The vehicle may not stop in front of these objects.

There is a danger of collision!

▶ In these situations, do not use Active Parking Assist.

Requirements

- The vehicle is equipped with a 360° camera.
- The vehicle has been parked with Active Parking Assist.

▶ Start the vehicle.

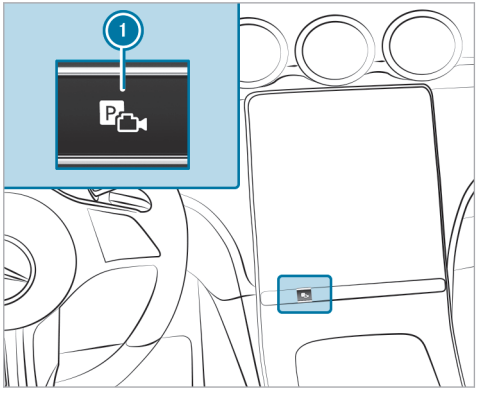

▶ Press button ①.

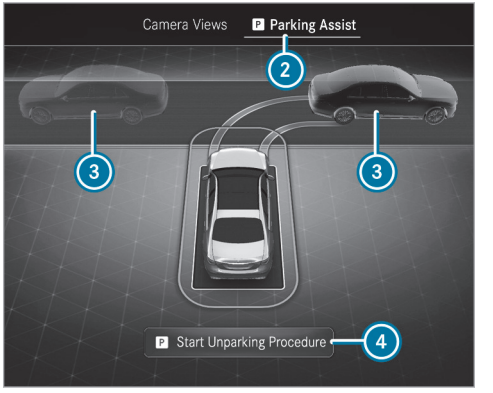

Parking Assistance menu (example)

▶ Select menu Parking Assistance ②.

▶ If necessary, change direction of exit ③.

▶ **To initiate the unparking procedure:** press button ① again.

or

- Depress the brake pedal and select Start Unparking Procedure ④ (depending on equipment).
- If necessary, change the transmission position. Observe any messages displayed on the driver display and central display.
  The vehicle will move out of the parking space.

The turn signal indicator will automatically be switched on when the process of exiting a parking space begins and switched off when it is completed. You are responsible for selecting the turn signal indicator in accordance with the traffic conditions. If necessary, select the turn signal indicator accordingly.

WARNING Risk of accident due to vehicle swinging out while parking or pulling out of a parking space

While parking or exiting a parking space, the vehicle swings out and can drive onto areas of the oncoming lane.

This could cause you to collide with objects or other road users.

- Pay attention to objects and other road users.
- Where necessary, stop the vehicle or cancel the parking procedure with Active Parking Assist.

After the parking space has been exited, a warning tone and the Active Parking Assist Finished: Take Control of Vehicle message will prompt you to take control of the vehicle. You will have to accelerate, brake, steer and change gear yourself again.

If you do not react to the prompt to take control of the vehicle, the system will brake the vehicle to a standstill.

Pausing Active Parking Assist

WARNING Risk of accident due to objects located above or below the detection range of Active Parking Assist

If there are objects above or below the detection range, the following situations may arise:

- Active Parking Assist may steer too early.
- The vehicle may not stop in front of these objects.

There is a danger of collision!

- In these situations, do not use Active Parking Assist.

You can interrupt the parking or unparking procedure of Active Parking Assist by performing one of the following actions, forexample:

- Depress the brake pedal.
- Open the front passenger door, a rear door, the tailgate or the hood.
- Apply the electric parking brake or activate the HOLD function.

▶ **To resume the parking or unparking procedure:** gently depress the accelerator pedal.

ⓘ If the electric parking brake was applied before Active Parking Assist was activated, depress the accelerator pedal gently to start the parking or unparking procedure.

Check the area around your vehicle again before resuming a paused parking procedure. Ensure that persons, animals or objects are no longer in the maneuvering range. Observe also the system limits of Active Parking Assist.

Automatic braking function of Active Parking Assist

⚠ **WARNING** Risk of accident due to objects located above or below the detection range of Active Parking Assist

If there are objects above or below the detection range, the following situations may arise:

- Active Parking Assist may steer too early.
- The vehicle may not stop in front of these objects.

There is a danger of collision!

▶ In these situations, do not use Active Parking Assist.

Persons or objects detected in the maneuvering range could cause the vehicle to brake sharply and interrupt the parking or exiting procedure. The vehicle will then be held at a standstill. If you depress the accelerator pedal, the parking or exiting procedure is resumed.

Check the area around your vehicle again before resuming the parking or exiting procedure. Check again that there are no persons, animals or objects in the maneuvering range. Also observe the system limitations of Active Parking Assist.

Maneuvering assistance

Function of Drive Away Assist

Drive Away Assist can reduce the severity of an impact when the vehicle is pulling away. If the system detects an obstacle in the direction of travel, the vehicle's speed will briefly be reduced to approximately 1 mph (2 km/h).

A risk of a collision may arise in the following situations, for example:

- If the driver mixes up the accelerator and brake pedals.
- If the driver engages an incorrect gear.
- If the driver depresses the accelerator pedal with too much force.

Drive Away Assist will be active under the following conditions:

- If the vehicle was stationary and the transmission position was changed to R or D.
- If the vehicle has rolled less than approximately 3.3 ft (1.0 m) since being at a standstill.
- If the detected obstacle is less than approximately 3.3 ft (1.0 m) away.

The Drive-away Assist can be deactivated or activated on the Maneuvering Assistance menu (→ page 379).

If a critical situation is detected, the symbol will appear in red in the selected view on the Camera & Parking menu.

ⓘ If Drive Away Assist is not available, the symbol will appear in grey. If the Camera & Parking menu is not opened on the central display, the symbol and pop-up of Parking Assist PARKTRONIC will both appear.

Drive Away Assist is only an aid. It is not a substitute for your attention to the surroundings. The responsibility for safe maneuvering and parking remains with you. Make sure that no persons, animals, objects etc. are in the maneuvering area.

⚠ **WARNING** Risk of accident caused by limited detection performance of Drive Away Assist

Drive Away Assist cannot always clearly identify objects and traffic situations.

- ▶ Always pay careful attention to the traffic situation; do not rely on Drive Away Assist alone.
- ▶ Be prepared to brake or swerve as necessary, provided the traffic situation permits and that it is safe to take evasive action.

System limits

Drive Away Assist is not available in drive program .

The system limits of Active Parking Assist apply (→ page 369).

The performance of Drive Away Assist will be restricted on uphill gradients.

If a transport device (e.g. trailer or bicycle carrier) is attached to the hitch and the electrical connection is correctly established, Drive Away Assist will not be available when the vehicle is backing up.

Cross traffic warning function

The cross traffic warning can warn you of crossing traffic when you are exiting a parking space. The radar sensors in the bumper also monitor the area adjacent to the vehicle.

The cross traffic warning will be active in the following circumstances:

- Warning for Cross Traffic, Rear: the vehicle is backing up at a speed slower than approximately 6 mph (10 km/h).
- Warning for Cross Traffic, Front: the vehicle is driving forwards at a speed slower than approximately 6 mph (10 km/h) and the camera image is shown on the central display (→ page 365).

The Warning for Cross Traffic, Front can be deactivated or activated on the Maneuvering Assistance(→ page 379) menu.

If a critical situation is detected, the symbol will appear in red in the selected view on the Camera & Parking menu.

Warning for Cross Traffic, Rear

- The vehicle brakes can be applied automatically when crossing traffic is detected.
- If the Camera & Parking menu is not open and a critical situation is detected, a warning will appear on the central display together with the PARKTRONIC Parking Assist pop-up.

Warning for Cross Traffic, Front

- If Active Parking Assist is active, the vehicle brakes can be applied automatically when crossing traffic is detected.

- If Active Parking Assist is not active but the Camera & Parking menu is open, a warning will appear.
- If the Camera & Parking menu is not open, the system will not be able to react to crossing traffic.

The cross traffic warning is only an aid and not a substitute for your attention to the surroundings. The responsibility for safe maneuvering and parking remains with you. Make sure that no persons, animals, objects etc. are in the maneuvering area.

WARNING Risk of accident caused by limited detection performance of the cross traffic warning

The cross traffic warning cannot always clearly identify objects and traffic situations.

- Always pay careful attention to the traffic situation; do not rely on the cross traffic warning alone.
- Be prepared to brake or swerve as necessary, provided the traffic situation permits and that it is safe to take evasive action.

System limits

ⓘ If the cross traffic warning is not available, the symbol will appear in grey.

The cross traffic warning is not available in drive program .

The system limits of Active Parking Assist apply (→ page 369).

If the radar sensors are obstructed by vehicles or other objects, detection will not be possible.

The cross traffic warning will not be available in the following situations:

- On inclines
- Warning for Cross Traffic, Rear: if transport equipment (e.g. trailer or bicycle rack) is attached to the hitch and the electrical connection is correctly established.

Function of close-range braking

The close-range braking function can prevent collisions with pedestrians when the vehicle is backing up at slow speeds. If the rear-view camera detects a person in the vehicle's path, the brakes can be applied to bring the vehicle to a standstill.

The close-range braking function may intervene in the following circumstances:

- The vehicle is backing up at a speed slower than 6 mph (10 km/h).
- The camera image is shown on the central display (→ page 365).

Close-range braking can be deactivated or activated on the Maneuvering Assistance menu (depending on the country) (→ page 379).

If the close-range braking function is triggered, the symbol will appear in red in the selected view on the Camera & Parking menu.

ⓘ If close-range braking is not available, the symbol will appear in gray.

The close-range braking function is only an aid. It is not a substitute for your attention to the surroundings. The responsibility for safe maneuvering and parking remains with you. Make sure that no persons, animals, objects, etc. are in the maneuvering range.

⚠ **WARNING** Risk of accident caused by limited detection by the maneuvering brake function

The maneuvering brake function cannot always clearly detect people. Other obstacles are not detected by the function.

In these cases, the function may brake unnecessarily or not brake at all.

▶ Always pay careful attention to the traffic situation; do not rely on the maneuvering brake function alone.

▶ Be ready to brake.

System limits

Close-range braking is not available in drive program [illegible].

Observe the system limits of the following functions:

- Active Parking Assist (→ page 369)
- 360° camera (→ page 359)
- Rear-view camera (→ page 357)

The close-range braking function will not be available in the following situations:

- On inclines
- If transport equipment (e.g. a trailer or bicycle rack) is attached to the trailer hitch and the electrical connection has been correctly established.

Activating/deactivating maneuvering assistant

Multimedia system:

→ [⌂] ▸▸ Settings ▸▸ Assistance ▸▸ Parking

ⓘ This function is an on-demand feature (→ page 77).

ⓘ Activating/deactivating the maneuvering assistant function is not available in all countries.

▶ Select Maneuvering Assistance.

▶ Activate or deactivate the desired maneuvering assistant.

Memory Parking Assist

Function of Memory Parking Assist

Memory Parking Assist can park your vehicle in a previously stored parking space. You can store parking procedures with a total distance of up to 550 yds (500 m) (110 yds (100 m) per parking or exiting procedure).

During parking or exiting, the system can cover a previously stored path of up to approximately 110 yds (100 m) to or out of the desired parking space, for example, from the driveway entrance into the garage.

Within a radius of approximately 165 yds (150 m), only one parking or exiting procedure can be recorded.

Only use Memory Parking Assist on private property. Use on public roads, e.g. in public parking areas, is not permitted.

Memory Parking Assist is only an aid. It is not a substitute for your attention to the surroundings. The responsibility for safe maneuvering and parking remains with you. Make sure that no persons, animals or objects etc. are in the vehicle's path.

System limits

Observe the system limits of Active Parking Assist (→ page 369).

WARNING Risk of accident due to objects located above or below the detection range of Memory Parking Assist

If there are objects above or below the detection range, the following situations may arise:

- Memory Parking Assist may steer too early.
- The vehicle may not stop in front of these objects.

This result in a collision.

▶ In these situations, do not use Memory Parking Assist.

Objects located above or below the detection range of Memory Parking Assist may not be detected during the parking procedure.

Objects including drawbars of parked trailers that protrude into the parking space may not be detected.

Do not use Memory Parking Assist in the following situations, for example:

- In extreme weather conditions such as ice, packed snow or in heavy rain.
- When transporting a load that protrudes beyond the vehicle.
- If the parking space is on a steep downhill or uphill gradient.
- When snow chains are installed.

You can watch an animation on this topic via the following link:

Recording a parking procedure using Memory Parking Assist

Requirements

- The entire route is within the bounds of your own property, for example, and not on public roads.
- The system needs reference points in the surrounding area to orient itself, such as fences, walls or trees. Therefore, after you start the vehicle, you will need to drive for a certain distance first. If not enough reference points are detected in the surrounding area, no new route can be recorded.

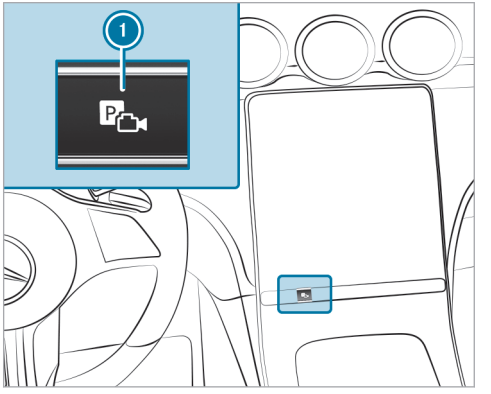

▶ Press button ①.
The Camera & Parking view will open on the central display.

- Select the Memory Parking Assist ② menu.
- Brake the vehicle to a standstill at the desired starting point of the assisted parking procedure, e.g. a driveway entrance.
- **To start recording:** tap on ③.

ⓘ If not all conditions for a recording are met, symbol ③ will be grayed out.

- Park the vehicle in the desired parking space. Do not exceed 5 mph (8 km/h).
- **To stop recording:** stop the vehicle and tap on ③ again.
  The recording will be stored.

ⓘ You can delete and rename stored parking procedures in the Memory Parking Assist settings.

Parking with Memory Parking Assist

Requirements

- A parking procedure has been recorded.

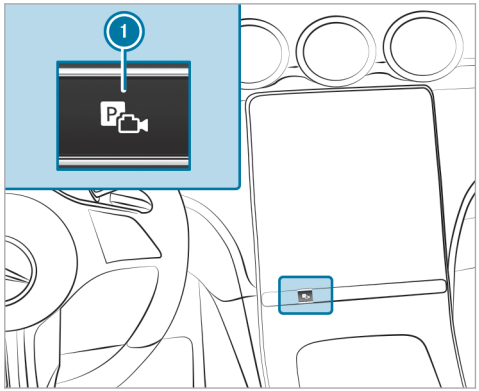

- Press button ①.
  The Camera & Parking view will open on the central display.

- Select Memory Parking Assist menu (2).
- Brake the vehicle to a standstill at the starting point of the stored parking procedure.
- **To start the parking procedure:** press [▶].
- Select the stored parking procedure from the list.
- Follow the instructions on the central display. The vehicle will drive into the selected parking space.

ⓘ The turn signal indicator will not be switched on automatically. You are responsible for selecting the turn signal indicator in accordance with the traffic conditions.

- Once the parking procedure is complete, secure the vehicle against rolling away.

Exiting a parking space with Memory Parking Assist

Requirements

- The unparking procedure was recorded together with the respective parking procedure and stored separately within one driving cycle.
- The vehicle was parked using Memory Parking Assist.

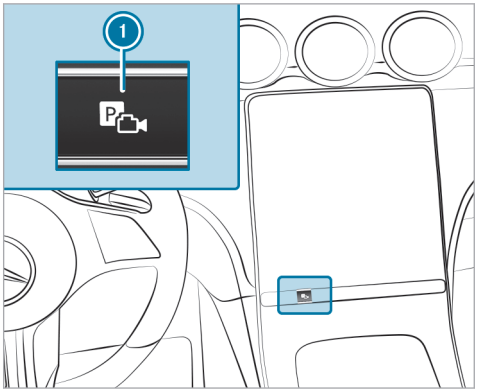

- Press button (1).
  The Camera & Parking view will open on the central display.

▶ Select Memory Parking Assist menu ②.

Starting the unparking procedure

▶ Press [▶].

▶ Confirm the saved unparking procedure.

▶ Follow the instructions on the central display. The vehicle will drive the recorded route.

ⓘ The turn signal indicator will not be switched on automatically. You are responsible for selecting the turn signal indicator in accordance with the traffic conditions.

▶ Take control of the vehicle after the unparking procedure has been completed.

Setting Memory Parking Assist

Multimedia system:

→ [⌂] ▸▸ Settings ▸▸ Assistance ▸▸ Parking ▸▸ Memory Parking Assist

Renaming a recording

▶ Select Memory Parking Assist.

▶ Select [✎] next to the desired recording.

▶ Enter a name and confirm with OK.

Deleting a recording

▶ Select Memory Parking Assist.

▶ Select [🗑] next to the desired recording. The selected recording will be deleted.

Deleting all recordings

▶ Select Memory Parking Assist.

▶ Select Delete All Tracks.

ⓘ Alternatively, you can delete all data in Memory Parking Assist by resetting the multimedia system (→ page 451).

Trailer Maneuvering Assist

Function of Trailer Maneuvering Assist

ⓘ This function is an on-demand feature (→ page 77).

⚠ WARNING Risk of accident due to unsuitable trailers

Trailers with a steered axle or a fifth wheel cannot be used with Trailer Maneuvering Assist.

Due to this, the trailer cannot be maneuvered in the desired direction and you can cause a collision or the trailer can rollover.

▶ Only use Trailer Maneuvering Assist with trailers with fixed drawbars and axles.

WARNING Risk of accidents due to unsuitable hitching devices

Trailer hitches without a ball head, such as a Hensley hitch or a pintle hitch, as well as any hitch adapters or multiple hitch ball mounts, **cannot** be guided by Trailer Maneuvering Assist.

This will prevent the trailer from maneuvering in the desired direction and you may cause a collision or the trailer may roll over.

- Use Trailer Maneuvering Assist only with a trailer hitch with a ball head.
- Use Trailer Maneuvering Assist only with a trailer hitch without additional attachments, such as a weight distribution system or sway control.
- Use Trailer Maneuvering Assist only with a trailer with a drawbar that has no additional attachments or superstructures.
- Use Trailer Maneuvering Assist only with a hitch ball mount. The use of an additional hitch adapter or hitch ball mount is not permitted.

WARNING Danger of accident due to incorrect taught values for the ball head position

If after changing the trailer, ball neck or changing the ball head position the values for the ball head position are **not** reset and a calibration drive is carried out again, Trailer Maneuvering Assist will not function properly.

This will prevent the trailer from maneuvering in the desired direction and you may cause a collision.

- After changing the trailer, the ball neck or the ball head position, do not use Trailer Maneuvering Assist without carrying out a calibration drive again.
- After changing the trailer, the ball neck or the ball head position, reset the taught-in values.
- Then, carry out a calibration drive to teach in the values of the new ball head position.

Information on resetting the taught-in values for the ball head position and on the calibration drive (→ page 390).

NOTE Damage due to overhanging loads in front or drawbar installations

The vehicle and the trailer may be damaged during maneuvering due to overhanging loads at the front of the trailer or drawbar installations.

- Pay attention to overhanging loads or drawbar installations while maneuvering.

Trailer Maneuvering Assist assists you with backing up with a trailer. The rear-view camera monitors the articulation angle between the vehicle and the trailer and adjusts it to a specified value. Trailer Maneuvering Assist also limits your speed.

For Trailer Maneuvering Assist to function properly, a calibration drive must be carried out for the trailer and ball neck used and if the ball head position is changed. The current ball head position will be taught in during the calibration drive (→ page 390).

Trailer Maneuvering Assist serves solely as an aid. It is not a substitute for you having to pay attention to your surroundings. The responsibility for safe maneuvering and parking remains with you. Ensure that there are no persons, animals or objects in the maneuvering area while maneuvering and parking in/exiting parking spaces.

You can enter the articulation angle value directly via the multimedia system, or use a straightening or 90° maneuver. When carrying out a straightening maneuver, the system calculates the articulation angle automatically and straightens the vehicle/trailer combination to the trailer's current direction.

Observe the notes regarding trailer operation (→ page 387).

System limits

Observe the system limits of the following functions:

- Active Parking Assist (→ page 369)
- 360° camera (→ page 359)
- Rear-view camera (→ page 357)

The system may be impaired or inoperative in the following situations:

- The gradient is greater than approximately 15%.
- The height of the ball head above even ground is less than 13.8 in (0.35 m) or greater than 21.6 in (0.55 m).

You can watch an animation on this topic via the following link:

Using Trailer Maneuvering Assist

Requirements

- The vehicle has been started and is stationary.
- A trailer is selected in the Vehicle menu (→ page 390).
- A trailer has been detected.
- A calibration drive was carried out using the trailer, ball neck and current ball head position (→ page 390).
- A straight travel maneuver was carried out to calibrate Trailer Maneuvering Assist , observing the instructions in the central display (→ page 390).
- The gradient is less than approximately 15 %.
- The tailgate is closed.
- The electric parking brake is not applied.
- The driver's seat belt is fastened.

ⓘ To ensure that the Trailer Maneuvering Assist functions correctly, reset the taught-in values for the ball head position after each change of trailer and ball neck as well as when changing the ball head position. Then perform a calibration drive again. Information on resetting and calibration drive (→ page 390).

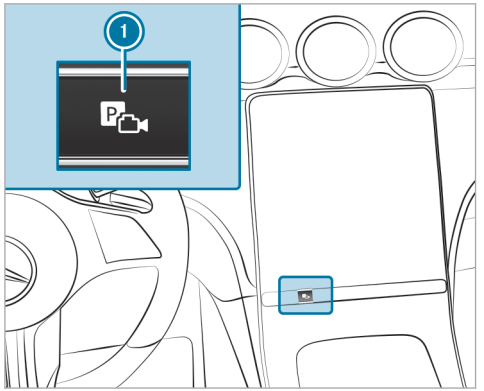

- Engage reverse gear [R].
- Press button 1.
  The camera image is shown on the central display.
- Take your hands off the steering wheel.

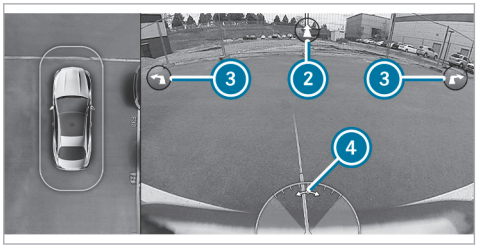

ⓘ This image is shown as an example and is without trailer.

You can select various maneuvers in the Trailer Maneuvering Assist menu. The maneuvers available depend on the trailer's current articulation angle and length.

- To adjust the articulation angle: select 4. To change the articulation angle, swipe to the left or right in the central display in the entire area of the camera image.

or

- To activate the straightening maneuver: select 2.
  The system calculates the articulation angle in such a way that the direction of the trailer at the time of activation is maintained. There is a short countersteering movement of the trailer while the vehicle is backing up to guide it back to the desired line. This allows the vehicle to align with the trailer, while at the same time maintaining the trailer's direction.

or

- To activate the 90° maneuver:
  - Align the vehicle in the same direction (line) as the trailer.
  - Select 3 (left or right).

  The system calculates the articulation angle so that a trailer can be maneuvered into a driveway at the most acute angle possible when it is perpendicular to its own vehicle. After the maneuver, the vehicle is aligned again in the trailer's direction.
- Accelerate and brake as required.

ⓘ The maximum articulation angle depends on the length of the trailer. The system calculates this by driving the vehicle forwards, including cornering. Before the trailer length has been calculated, the maximum articulation angle is approximately 23°. The longer the trailer, the greater the maximum articulation angle (max. approximately 60°).

ⓘ Be aware of all surroundings and always remain ready to brake.

Trailer hitch

Notes on trailer operation

⚠ WARNING Risk of accident due to unsuitable ball neck

If you install an unsuitable ball neck, the trailer hitch and the rear axle may be overloaded.

This can significantly impair the driving characteristics and the trailer may become loose. There is a risk of fatal injury.

▶ Only install a ball neck that complies with the permissible dimensions and is designed for the requirements of trailer operation.

▶ Do not modify the ball neck or the trailer hitch.

The values approved by the manufacturer can be found on the identification plates and in the "Technical data" section under "Trailer hitch" for the towing vehicle (→ page 773).

⚠ WARNING Risk of accident due to vehicle/trailer combination swerving

If you drive too fast in trailer operation, the vehicle/trailer combination may start to swerve.

This could cause you to lose control of the vehicle/trailer combination. The vehicle/trailer combination may even rollover.

▶ Under no circumstances should you try to straighten the vehicle/trailer combination by increasing your speed.

▶ Reduce the speed and do not countersteer.

▶ Brake if necessary.

! NOTE Damage to the engine resulting from overheating

▶ If you subsequently have a trailer coupling retrofitted, depending on the vehicle type, changes to the engine cooling system may be required.

In the case of retrofitting a trailer coupling, please observe the attachment points on the vehicle frame.

The installation of a trailer hitch is only permissible if a trailer load is specified in your vehicle documents. If this is not the case, the vehicle is not approved for trailer operation.

Further information can be obtained at a qualified specialist workshop.

Please observe the manufacturer's operating instructions for the trailer coupling if a detachable trailer coupling is used.

Couple and uncouple the trailer carefully. If you do not couple the trailer to the towing vehicle correctly, the trailer could become detached.

Observe the following notes on the tongue weight:

- do not use a tongue weight that exceeds or falls below the permissible tongue weight
- use a tongue weight as close as possible to the maximum tongue weight

Do not exceed the following values:

- Permissible trailer load
- Permissible rear axle load of the towing vehicle
- Permissible gross mass of the towing vehicle
- Permissible gross mass of the trailer
- Maximum permissible speed of the trailer

Ensure the following before starting a journey:

- the tire pressure on the rear axle of the towing vehicle is set for a maximum load
- the lighting of the connected trailer is operational

In the event of increased rear axle load, the vehicle/trailer combination may not exceed a maximum speed of 62 mph (100 km/h) for reasons concerning the operating permit. This also applies in countries in which the permissible maximum speed for car/trailer combinations is above 62 mph (100 km/h).

Attaching the ball neck

WARNING Risk of accident and injury due to incorrectly installed ball neck

If the ball neck is not properly mounted and secured, it may come loose along with the trailer while the vehicle is in motion and endanger other road users. There is a risk of fatal injuries.

- ▶ Mount and secure the ball neck as described in the installation instructions of the ball neck manufacturer.
- ▶ With the ball neck mounted, always make sure it is properly secured before commencing a journey.

Attaching the ball neck

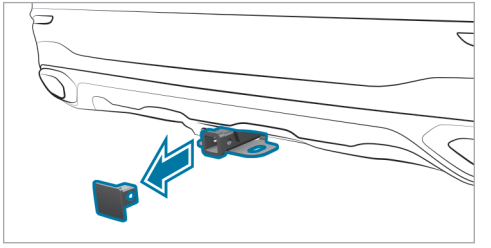

- ▶ Secure the vehicle against rolling away.
- ▶ Remove cover cap (1) from the ball neck mount in the direction of the arrow.
- ▶ Store cover cap (1) such that it cannot move around.
- ▶ Comply with the installation instructions of the ball neck manufacturer.

Observe the notes on loading the vehicle.

ⓘ To ensure that the Trailer Maneuvering Assist functions properly, the taught-in values for the ball head position must be reset after each change of trailer, ball neck, or ball head position. A calibration drive must then be performed again. Information on resetting and the calibration drive (→ page 390).

Coupling up/uncoupling a trailer

The trailer will only be correctly detected by the vehicle if the following conditions are fulfilled:

- the trailer is connected correctly
- the trailer lighting system is in working order

ⓘ Before using Trailer Maneuvering Assist and after each change of trailer, a calibration drive must be carried out with the ball neck being used (→ page 390).

A correctly connected trailer influences, among other things, the functions of the following systems:

- ESP® trailer stabilization
- Trailer Maneuvering Assist
- Active Lane Keeping Assist
- Parking Assist PARKTRONIC
- Active Parking Assist
- Blind Spot Assist
- Active Blind Spot Assist
- Drive Away Assist
- Cross traffic warning
- Maneuvering brake function
- Rear view camera
- 360° camera

Vehicles without level control system: the ball head height will change depending on the vehicle's load. In this case, use a trailer with a height-adjustable drawbar.

Coupling up a trailer

! **NOTE** Damage to the starter battery due to full discharge

Charging the trailer battery using the power supply of the trailer can damage the starter battery.

▶ Do not use the vehicle's power supply to charge the trailer battery.

Information about a suitable ball neck for Mercedes-Benz vehicles can be obtained from a qualified specialist workshop, e.g. an authorized Mercedes-Benz Center.

▶ Secure the vehicle against rolling away.

▶ Remove the cover cap from the ball neck mount and store it in a safe place (→ page 388).

▶ Position the trailer on a level surface behind the vehicle and couple it up to the vehicle.

▶ Establish the electrical connection between the vehicle and the trailer.

ⓘ Accessories can be connected to the permanent power supply up to 180 W, and to the power supply that is switched on via the ignition lock.

Decoupling a trailer

WARNING Risk of being crushed and becoming trapped when uncoupling a trailer

When uncoupling a trailer with an engaged inertia-activated brake, your hand may become trapped between the vehicle and the trailer drawbar.

- Do not uncouple trailers with an engaged overrun brake.

NOTE Damage during uncoupling with an engaged overrun brake

The vehicle may be damaged if you uncouple with an engaged overrun brake.

- Do not uncouple trailers with an engaged overrun brake.

- Secure the vehicle against rolling away.
- Disconnect the electrical connection between the vehicle and the trailer.
- Uncouple the trailer.
- Remove the ball neck and, in doing so, observe the installation instructions from the ball neck manufacturer.
- Place the cover cap on the ball neck mount.

Selecting a trailer type

Multimedia system:

→ [⌂] ▸▸ Settings ▸▸ Vehicle ▸▸ Driving ▸▸ Trailer Type

Configuring settings for a trailer

The settings on this menu make it possible to calculate a route suitable for the selected trailer and optimize the calculated arrival time. Depending on the vehicle equipment, the maximum speed displayed on the instrument cluster will also be adjusted accordingly and taken into account in the context of speed acceptance.

- Select the desired trailer type.
- Select the maximum permissible speed of the selected trailer.

ⓘ No maximum speed can be entered for a bicycle rack.

- **To save changes:** select Confirm.

ⓘ When contact with the trailer socket is established (trailer/rear bicycle rack), a menu will automatically appear on the display.

The following options are available:

- Bicycle rack
- Small trailer
- Large trailer

You can watch an animation on this topic via the following link:

Calibrating a trailer coupling

- Select Trailer coupling has been changed to start calibration for the new ball head position.
- **To save changes:** select Confirm.
- Activate Trailer Maneuvering Assist and follow the corresponding instructions on the central display.
  When the Activated: Trailer Maneuvering Assist message is displayed, calibration is complete and Trailer Maneuvering Assist can be used.

Vehicle towing instructions

The vehicle is not suitable for the use of tow bar systems that are used for flat towing or dinghy towing, for example. Attaching and using tow bar systems may result in damage to the vehicle. When you are towing a vehicle with tow bar systems, safe driving characteristics cannot be guaranteed for the towing vehicle or the towed vehicle. The vehicle-trailer combination may swerve from side to side.

Observe the following information:

- Permitted towing methods (→ page 590)
- **Plug-in hybrid:** permitted towing methods (→ page 591)
- **Mercedes-AMG E Performance:** permitted towing methods (→ page 592)
- The notes on towing the vehicle with both axles on the ground (→ page 54)

Notes on the driver display

WARNING Risk of accident if the driver's display fails

If the driver's display fails or malfunctions, you may not be aware of any functional limitations to safety-critical systems. This may affect the operating safety of the vehicle.

▶ Park the vehicle safely as soon as possible and notify a qualified specialist workshop.

If the operating safety of your vehicle is impaired, park the vehicle immediately and safely. Contact a qualified specialist workshop.

The driver display shows the following basic information:

- Speed and engine speed
- Fuel level and coolant temperature
- Indicator and warning lamps

Additional functions available include the following:

- Various menus, such as Assistance and Navigation
- Status displays for the driving systems
- Display messages
- Information on speed, Consumption and Range
- Power meter level and state of charge of the high-voltage battery
- Indicator and warning lamps

Additional notes for plug-in hybrid vehicles:

- Further indicators on the driver display:
  - READY Drive system is activated
  - "Foot off the accelerator" (→ page 252)

Some menu content and settings can be changed (→ page 394).

Operating the driver display

WARNING Risk of distraction from information systems and communications equipment

If you operate information systems and communication devices integrated in the vehicle when driving, you could be distracted from the traffic situation. This could also cause you to lose control of the vehicle.

▶ Only operate this equipment when the traffic situation permits.

▶ If you cannot be sure of this, stop the vehicle whilst paying attention to road and traffic conditions and operate the equipment with the vehicle stationary.

Observe the legal requirements for the country in which you are currently driving when operating the driver display.

Scrolling on the menu bar

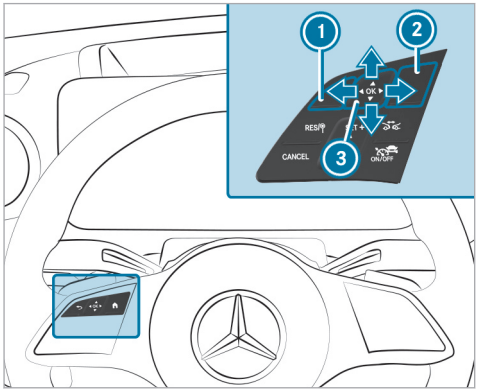

1. Back button
2. Main menu button
3. Touch Control

You can manage the content of the driver display with the controls on the left of the steering wheel. You can navigate the content by swiping vertically and horizontally with one finger on Touch Control ③. Press the Touch Control to confirm your selection.

ⓘ To operate Touch Control ③ in the most effective way, use the tip of your thumb if possible. You can also set the sensitivity of the Touch Control on the central display (→ page 428).

- ▶ Briefly press main menu button ②.
- ▶ Select a menu by swiping to the left or right on Touch Control ③.
- ▶ **To confirm:** press Touch Control ③.

You can watch an animation on this topic via the following link:

Driver display menus

Notes on menus on the driver display

⚠ **WARNING** Risk of distraction from information systems and communications equipment

If you operate information systems and communication devices integrated in the vehicle when driving, you could be distracted from the traffic situation. This could also cause you to lose control of the vehicle.

- ▶ Only operate this equipment when the traffic situation permits.
- ▶ If you cannot be sure of this, stop the vehicle whilst paying attention to road and traffic conditions and operate the equipment with the vehicle stationary.

Observe the legal requirements for the country in which you are currently driving when operating the driver display.

The following menus can be called up via the menu bar on the driver display:

- Understated
- Sport
- Classic
- Navigation
- Assistance
- Offroad (vehicles with 4MATIC)
- Service
- Mercedes-AMG vehicles: TRACK PACE

On some of these menus, you can choose from a range of information for the center display content.

On most of the menus, you can use Options to configure further settings for the menu-specific display content.

You can watch an animation on this topic via the following link:

Calling up and operating menus on the driver display

Calling up a menu on the driver display

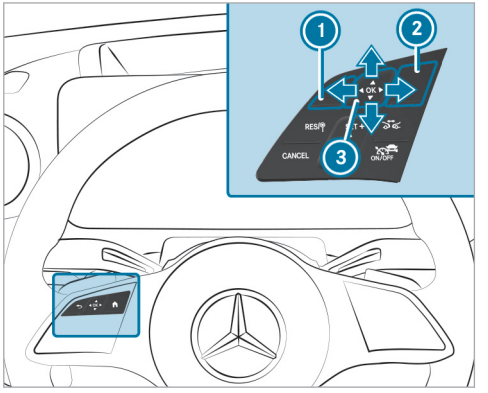

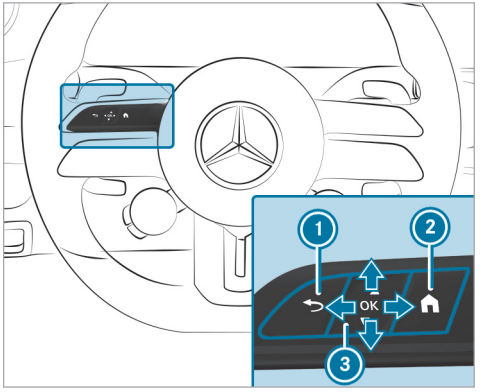

Mercedes-AMG vehicles

1 Back button
2 Main menu button
3 Touch Control

▶ Press main menu button 2 on the steering wheel.
The menu bar will be shown in the lower area of the driver display.

- Swipe to the left or right on Touch Control ③ and select a menu (e.g. the Classic menu) on the menu bar.
- **To confirm:** press Touch Control ③.

Calling up or exiting the **Options** submenu

- **To call up:** press Touch Control ③.
- **To exit:** press back button ①.

Browsing through display content or lists

- Swipe vertically or horizontally on Touch Control ③.

ⓘ On some menus, an index character will be displayed at the right edge of the center display content to indicate how the information has been sorted.

Presetting displays

You can preset individually configured information of a menu and thus determine the standard display.

- Press Touch Control ③ until the bar is completely filled.
  Answer the Set Shortcut? query as follows.
- Swipe to the left on Touch Control ③ and select Yes.
- **To confirm:** press Touch Control ③.
- **To call up presettings:** press back button ① on the upper level of a menu.

ⓘ Pressing back button ① on the standard display will open the previous menu.

Resetting values

- **To call up the Options submenu:** press Touch Control ③.
- Select Yes .
- **To confirm:** press Touch Control ③.

Classic or Understated menu

Driver display:
→ Classic

Selecting the center display content

The Classic menu shows the driver display separated into speedometer and tachometer. The area in between can be filled with various types of information.

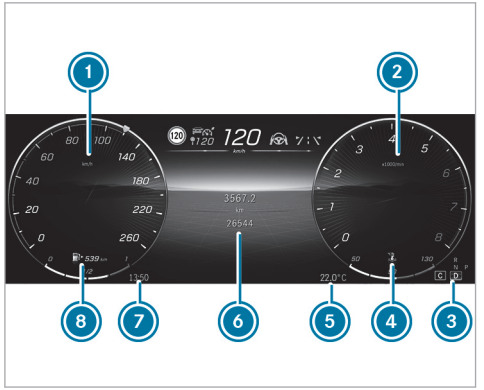

1. Speedometer
2. Tachometer or clock
3. Transmission position
4. Coolant temperature display
5. Outside temperature
6. Center display content (example: trip distance)
7. Time
8. Fuel level and fuel filler flap location indicator

▶ Call up the Classic menu via the driver display menu bar.

▶ **To select display content:** Swipe upwards or downwards on the Touch Control and select the display content.

The following information can be shown in the center display content 6:

- Trip and total distance
- Trip computer From Start and From Reset
- ECO display
- Consumption
- ATTENTION ASSIST
- Audio
- Navigation

Trip computer (example)

1. Proportion of driving done in electric mode (distance traveled under electric power per total distance traveled)

Information about range

- The actual range achieved may differ from the range displayed. Your previous driving style will be taken into account when the range is being calculated.
- Factors such as outside temperature or climate control settings have a direct influence on the achievable range.

- While the navigation system or commuter route is active, additional information about the route ahead can be included in the range calculation.

Information on electric energy consumption

- The From Start and From Reset consumption figures take into account all active consumer equipment when it comes to the drive system's operational readiness READY.

Information on the proportion of driving done in electric mode

- When the proportion of driving done in electric mode is determined, only distances driven under the following conditions will be taken into account:
  - The combustion engine is switched off.
  - The Electric or Hybrid drive program is active.
  - The high-voltage battery is charged.

Distances traveled under electric power in the Battery Level drive program or with an empty high-voltage battery will not be taken into account in the proportion of driving done in electric mode.

ⓘ To increase the proportion of driving done in electric mode, charge the high-voltage battery as frequently as possible at a suitable charging facility.

Selecting the radio station or track on the station or track list

You can change radio stations or tracks on the station or track list in the center display content with audio information.

The following will be adjusted in the MBUX multimedia system:

- Configuring the station or track list
- Switching between media sources
- Setting the frequency band

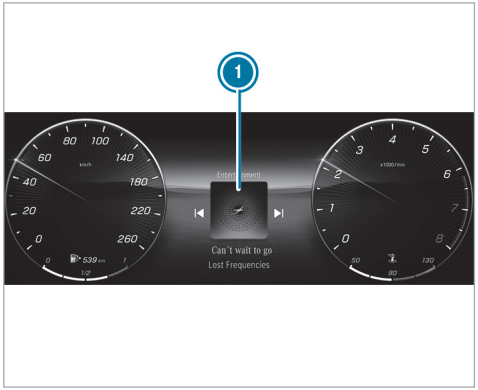

① Track list in the center display content (example)

▶ **To change radio stations or tracks:** swipe left or right on the Touch Control and select a radio station or track on the station or track list ①.

ⓘ If you do not select something immediately after opening the station or track list ⓘ, the view will return to the radio station or track selected.

ⓘ The radio station or track displayed when the vehicle is restarted depends on the user profile used for the previous trip.

Calling up or exiting the **Options** submenu

Depending on the information in the center display content, you can configure various settings on the Options submenu.

▶ **To call up the Options submenu:** press the Touch Control.

▶ **To exit the Options submenu:** press the back button ⮌.

The following functions may be available on the Options submenu, for example:

- Navigation: selecting and adjusting zoom, route guidance and map settings
- Resetting the trip odometer
- Resetting the trip computer From Start
- Resetting the trip computer From Reset
- Resetting the ECO display values

Changing color settings on the **Understated** menu

▶ Call up the Understated menu via the driver display menu bar.

▶ **To call up the color list:** press the Touch Control.
The color list on the Understated menu will be displayed.

▶ **To select color settings:** swipe upwards or downwards on the left-hand Touch Control and select the desired color setting.

ⓘ If you do not select anything within a limited time after opening the color list, the view will switch back to the default view of the Understated menu.

▶ **To exit the color list:** press the back button ⮌.

ⓘ Depending on the equipment, the selected color setting will be adopted for the ambient lighting and the MBUX multimedia system. If you select the Understated menu on the driver display, the content in the MBUX multimedia system will also be made smaller.

Classic or Understated menu (Mercedes-AMG vehicles)

Driver display:
⮕ Classic

Selecting the center display content

The Classic menu shows the driver display separated into speedometer and tachometer. The area in between can be filled with various types of information.

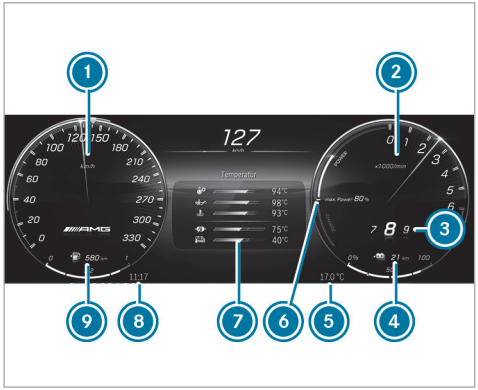

Illustration of plug-in hybrid vehicles (example)

1. Speedometer
2. Tachometer
3. Gear display
4. State of charge of the high-voltage battery
5. Outside temperature
6. Recuperation display and electric drive support display
7. Center display content (example: temperature)
8. Time
9. Fuel level and fuel filler flap location indicator

▶ Call up the Classic menu via the driver display menu bar.

▶ **To select display content:** swipe upwards or downwards on the left-hand Touch Control and select the display content.

The following information can be shown in the center display content:

- Trip and total distance
- Trip computer From Start and From Reset
- ECO display
- Consumption
- ATTENTION ASSIST
- Audio
- Navigation
- **Plug-in hybrid vehicles:** temperature (transmission oil, engine oil, coolant, high-voltage battery and high-voltage motor)
- **Vehicles with combustion engines:** temperature display (transmission oil, engine oil, coolant)
- Set-up (drive, AMG DYNAMICS, suspension and sound)
- Engine data (current power output and current torque)

ⓘ Depending on the vehicle equipment, AMG-specific content regarding temperature, set-up and engine data will be displayed. You can set the display content either using the buttons on the multifunction steering wheel or via the MBUX multimedia system (→ page 260).

Changing the radio station or track on the station or track list

You can change radio stations or tracks on the station or track list in the center display content with audio information.

The following will be adjusted in the MBUX multimedia system:

- Configuring the station or track list
- Switching between media sources

- Setting the frequency band

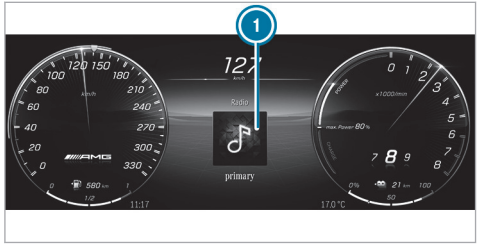

① Radio stations in the center display content (example)

▶ **To change radio stations or tracks:** swipe left or right on the Touch Control and select a radio station or track on the station or track list.

ⓘ If you do not select something immediately after opening the station or track list, the view will return to the radio station or track selected.

ⓘ The radio station or track displayed when the vehicle is restarted depends on the user profile used for the previous trip.

The following functions may be available on the Options submenu, for example:

- Navigation: selecting and adjusting zoom, route guidance and map settings
- Resetting the trip odometer
- Resetting the trip computer From Start
- Resetting the trip computer From Reset
- Resetting the ECO display values

Changing color settings on the **Understated** menu

▶ Call up the Understated menu via the driver display menu bar.

▶ **To call up the color list:** press the Touch Control.
The color list on the Understated menu will be displayed.

▶ **To select color settings:** swipe upwards or downwards on the left-hand Touch Control and change the color setting.

ⓘ If you do not select something immediately after opening the color list, the view will switch back to the default view for the Understated menu.

▶ **To exit the color list:** press the back button ⮌.

ⓘ Depending on the equipment, the selected color setting will also be adopted for the ambient lighting and the MBUX multimedia system. If you select the Understated menu on the driver display, the content in the MBUX multimedia system will also be made smaller.

Service menu

Driver display:
→ Service

The current status of the vehicle is shown on the Service menu.

▶ **To call up the menu:** press the Touch Control.

The following display content is available on the Service menu (equipment-dependent):

- Information about how many messages are in the message memory
- Tire Pressure:
  - Restarting the tire pressure loss warning system (→ page 607)
  - Checking the tire pressure with the tire pressure monitoring system (→ page 605)
  - Restarting the tire pressure monitoring system (→ page 606)
- ASSYST PLUS: calling up the service due date (→ page 556)
- Engine Oil Level: checking the engine oil level (→ page 29)
- Coolant indicator
- **Mercedes-AMG vehicles with plug-in hybrid:** temperature display (transmission oil, engine oil, coolant, high-voltage battery and high-voltage motor)
- **Mercedes-AMG vehicles with combustion engines:** temperature display (transmission oil, engine oil, coolant)

The following functions are available on the Options submenu:

- Tire pressure (→ page 605)
- Message memory (→ page 777)

Assistance menu

Driver display:

→ Assistance

The Assistance menu displays various driver assistance systems and navigation instructions.

▶ **To call up the display:** select Assistance on the driver display.

▶ Press the Touch Control.

Active Distance Assist DISTRONIC indicator on the assistant display (example)

In vehicles with the Driving Assistance Package, the following displays may vary depending on the driving situation:

- The navigation instructions in the left-hand display section
- The traffic light view in the right-hand display section
- The display of the driver assistance systems
- The level of detail on the assistant display

In vehicles without the Driving Assistance Package, your lane and the vehicle in front will be displayed.

The following status displays are available on the assistant display:

- Green: pedestrian detection active
- Gray: pedestrian detection enabled
- Green radar waves next to vehicle: Blind Spot Assist or Active Blind Spot Assist enabled and ready for operation
- Gray radar waves next to vehicle: Blind Spot Assist or Active Blind Spot Assist enabled but not ready for operation

The content on the assistant display will adapt to the following situations:

- Number of lanes detected
- Change of direction, e.g. lane change
- Current road conditions
- Road users detected

ⓘ The assistant display will not display other detected obstacles with the exception of road users.

The following functions are available on the Options submenu:

- Starting route guidance
- With active route guidance: end route guidance
- Call up previous destinations and favorites
- Start new route guidance to a recent destination
- Start new route guidance to a favorite

Sport menu

Driver display:

→ Sport

The Sport menu provides information about the engine data of the vehicle.

ⓘ When you call up the Sport menu on the menu bar of the driver display, the menu color setting will automatically be applied to the MBUX multimedia system.

▶ **To call up the menu:** press the Touch Control.

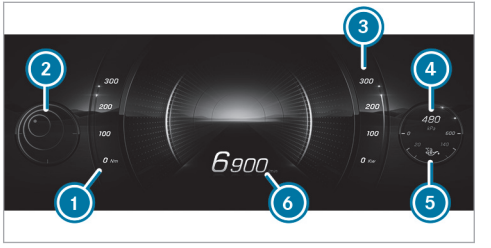

1. Current torque
2. G-meter
3. Current power output
4. Boost pressure
5. Engine oil temperature
6. Engine speed

Sport menu (plug-in hybrid)

Driver display:

→ Sport

The Sport menu provides additional information about the operating energy as well as the recuperated power of the vehicle.

ⓘ When you call up the Sport menu on the menu bar of the driver display, the menu color setting will automatically be applied to the MBUX multimedia system.

▶ **To call up the menu:** press the Touch Control.

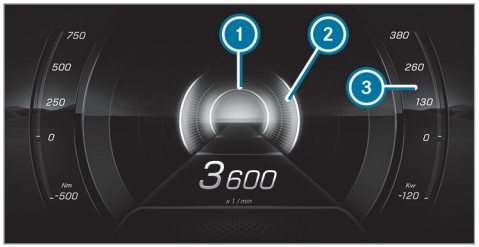

① Display area for recuperated power (recuperation)
② Display area for output
③ Additional display area for output

Supersport menu

Requirements

- For Mercedes-AMG vehicles only.

Driver display:

→ Supersport

Selecting the center display content

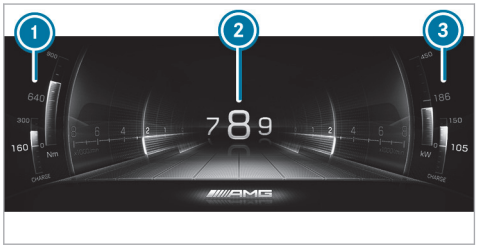

① Current torque and recuperation display
② Center display content (example: selected gear and electric drive support display)
③ Current power and recuperation display

▶ Press the main menu button ⌂ on the steering wheel.

▶ Swipe to the left or right on the Touch Control to call up the Supersport menu on the menu bar of the driver display.

▶ **To select display content:** swipe upwards or downwards on the Touch Control.

ⓘ Displays ① and ③ vary depending on the center display content.

The center display content shows the following information:

- Transmission position display
- **Plug-in hybrid vehicles:** temperature display (transmission oil, engine oil, coolant, high-voltage battery and high-voltage motor)
- **Vehicles with combustion engines:** temperature display (transmission oil, engine oil, coolant)
- **Vehicles with combustion engines:** engine data
- Set-up (drive, AMG DYNAMICS, suspension and sound)
- G-force
- Trip and total distance
- Distance From Start and From Reset
- Consumption
- Audio
- Navigation

ⓘ Depending on the vehicle equipment, AMG-specific content regarding temperature, set-up and engine data will be displayed. You can configure the set-up display content either using the buttons on the multifunction steering wheel or via the MBUX multimedia system (→ page 260).

Track Pace menu

Requirements

- For Mercedes-AMG vehicles only.

Driver display:

→ TRACK PACE

The Track Pace function is intended only for closed race tracks. Do not use this function on public roads, and adapt your driving style to your personal capabilities and the ambient conditions.

The following options will be displayed on the TRACK PACE menu:

- G-meter
- Race track selected
- Braking and acceleration procedure
- Gear currently selected

Indicators on the Track Pace menu (example)

① G-meter
② Center display content (example: gear display)
③ Telemetry display (example: selected race track)

▶ **To call up the menu:** press the Touch Control.

The content of the TRACK PACE menu will adapt to the selected settings on the central display:

- Gear display

- Braking points
- Acceleration
- Quarter-miles
- Race track selected on the central display
- Current race
- Record route

While the vehicle is in motion, the G-meter will show the forces that are exerted on the vehicle occupants both laterally and in the direction of travel. The maximum values will be shown in red in the coordinate system.

Off-road menu

Driver display:

→ Offroad

Among other things, the menu shows the following information:

- Steering angle
- Chassis height
- Elevation above sea level
- Compass with direction of travel
- Coordinates

▶ **To call up the menu:** press the Touch Control.

Navigation menu

Driver display:

→ Navigation

The Navigation menu shows the relevant map with navigation instructions.

▶ **To call up the menu:** press the Touch Control.

Changing the scale of the selected map view

La Prairie
Carouge
Lac Leman
Bellevue
Versoix
Genève
Cologny
Vandœuvres
Pregny-Chambésy
Plan-les-Ouates
Chêne-Bourg
Thônex
Carouge
Meyrin
Vernier
Grand-Saconnex
Le Petit-Saconnex
Cornavin
Eaux-Vives
Plainpalais
Champel
Pâquis
Cité
Acacias
Grottes
Pâquis
Plainpalais
Eaux-Vives
Cornavin
Champel

You can set the map scale permanently in the MBUX multimedia system (→ page 490).

The following functions are available on the Options submenu:

- With active route guidance: end route guidance
- Select route guidance
- Map Settings

ⓘ If the current route guidance is ended on the Navigation menu of the driver display, it will also be ended in the MBUX multimedia system.

On the Options submenu, you can use other functions in the Destinations and Map Settings categories.

You can use the following functions in the Destinations category:

- Call up previous destinations and favorites
- Start new route guidance to a favorite

ⓘ The two options Work and Home will be displayed in Favorites even if no address is stored.

You can use the following functions in the Map Settings category:

- Activate auto zoom
- Set the map view, satellite view and route overview.

The following map views are available on the Navigation menu:

- Entire route
- 2D direction of travel
- 2D north-up

Head-up Display

Function of the head-up display

The head-up display projects various content into the driver's field of vision, for example.

You can use the head-up display menu bar to select different contexts, e.g.:

- **Mercedes-AMG vehicles:** Supersport
- **Mercedes-AMG vehicles:** TRACK PACE
- **Mercedes-AMG vehicles:** RACE START
- **Mercedes-AMG vehicles:** Race
- Minimal
- Sport
- Standard
- Offroad (vehicles with 4MATIC)
- Settings
- Head-up display on/off

Head-up display content with navigation (9x3°)

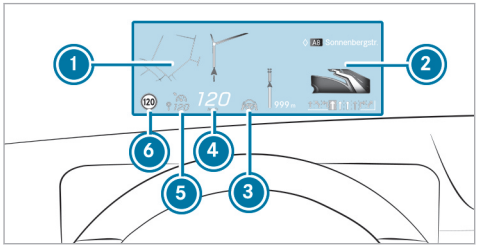

1. Navigation instructions
2. Navigation instructions (distance to the next route event)
3. Steer Assist status
4. Current speed
5. Set speed in the driving system (e.g. cruise control)
6. Detected traffic signs (Traffic Sign Assist)

When you receive a call, the [ ] Call Waiting message will appear on the head-up display and the driver display.

System limits

Visibility is influenced by the following conditions in particular:

- Seat position
- Image position setting
- Ambient light
- Wet road surfaces
- Objects on the display cover
- Polarization in sunglasses

You can watch an animation on this topic via the following link:

Operating the head-up display

Selecting display content of the head-up display via the menu bar of the driver display

▶ Press the main menu button [ ].

▶ **To select the menu bar of the head-up display:** swipe upwards on the Touch Control.

Switching between display content on the head-up display

▶ Swipe to the left or right on the Touch Control. A preview of the selected display content will appear on the head-up display.

▶ **To confirm:** press the [OK] button.

Switching back to the driver display

▶ Press the [ ] or [ ] button.

Setting the position and brightness

▶ Swipe to the left or right on the Touch Control and select Settings on the menu bar of the head-up display.

- Press the Touch Control.
  The current position and brightness settings will be displayed as graphics on the head-up display as well as on the driver display.
- **To adjust the position:** swipe upwards or downwards on the Touch Control.
- **To adjust the brightness:** swipe to the left or right on the Touch Control.
  The settings configured for position and brightness will be saved automatically.
- Press the [↩] or [OK] button to exit the settings.

Switching the head-up display on/off

Driver display:

Switching on

- Swipe upwards on the Touch Control.
- Press Touch Control [OK].

Switching off

- Swipe upwards on the Touch Control.
- Swipe on the Touch Control and select Head-up Display.
- Press Touch Control [OK].

Setting the head-up display in the multimedia system

Multimedia system:

Switching the head-up display on/off

- Select Head-up Display.
  The head-up display is activated or deactivated.

Vehicles with a 48 V on-board electrical system

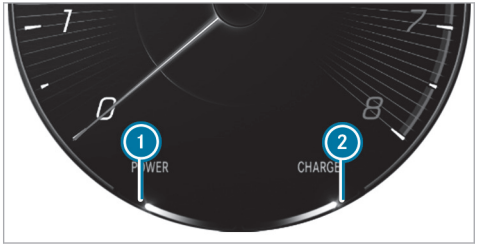

1. Electric drive support
2. Recuperation behaviour of the electric motor

ⓘ Due to various system limits, the values displayed may temporarily differ slightly from the actual value.

Function of the power meter

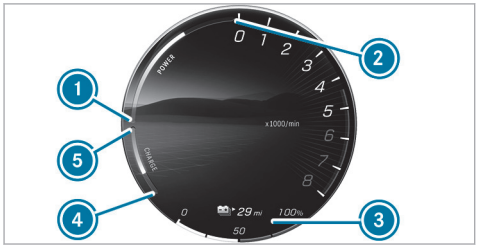

1. Start of the POWER display range
2. End of the POWER display range
3. Current state of charge of the high-voltage battery
4. Maximum recovered energy
5. Start of the display range of the recovered energy

The power meter has the following functions:

- In electric mode, area 1 – 2 shows what percentage of the electrical drive is currently being used. The combustion engine is switched on at a percentage of 100%. In boost mode, the electrical power assistance of the drive is displayed.
- The area 4 – 5 shows the recuperation and charging behavior using the combustion engine.

ⓘ Due to various system limits, displayed value 4 may temporarily differ slightly from the actual value.

Overview of status indicators on the driver display

The status indicators for the driving and driving safety systems are shown in the 1 and 4 areas.

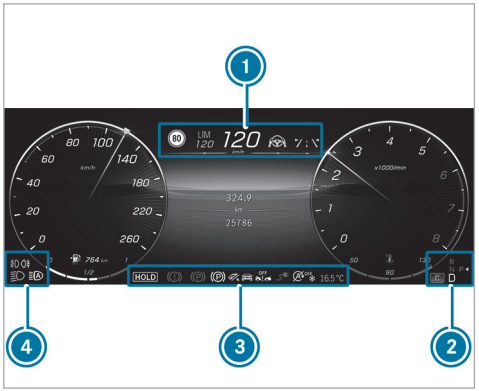

- Pedestrian detection (on assistant display only) (→ page 195)
- Active Parking Assist is available (→ page 371)
- Active Parking Assist has detected a parking space (→ page 371)
- Parking Assist PARKTRONIC deactivated (→ page 369)

- Cruise control (→ page 316)
- Active Distance Assist DISTRONIC (→ page 318)
- Specified distance for Active Distance Assist DISTRONIC (→ page 318)
- Active Brake Assist switched off (→ page 342)
- Active Brake Assist impaired or not functioning (→ page 342)
- Active Steering Assist (→ page 329)
- Active Lane Change Assist (→ page 333)
- Active Lane Keeping Assist (→ page 350)
- Active Blind Spot Assist (on assistant display only) (→ page 349)
- Blind Spot Assist (on assistant display only) (→ page 349)
- READY Plug-in hybrid operation activated
- Haptic accelerator pedal (→ page 250, 252, 246)
- ECO start/stop function (→ page 243)
- HOLD HOLD function (→ page 312)
- Adaptive Highbeam Assist (→ page 198)
  Adaptive Highbeam Assist Plus (→ page 199)
- Active Stop-and-Go Assist (→ page 327)
- Slippery road surface warning

Vehicles with Traffic Sign Assist: detected instructions and traffic signs (→ page 342)

Important information from other driving systems may briefly appear in front of the displayed traffic signs.

Overview of status indicators on the driver display (Mercedes-AMG vehicles)

The status indicators for the driving and driving safety systems are shown in the 1 and 6 areas.

ⓘ The number, position and presentation of the status indicators on the driver display depend on which systems are activated or deactivated.

Depending on the equipment, Mercedes-AMG vehicles have the following status displays:

- Pedestrian detection (on assistant display only) (→ page 195)

- Active Parking Assist is available (→ page 371)
- Active Parking Assist has detected a parking space (→ page 371)
- Parking Assist PARKTRONIC deactivated (→ page 369)
- Cruise control (→ page 316)
- Active Distance Assist DISTRONIC (→ page 318)
- Specified distance for Active Distance Assist DISTRONIC (→ page 318)
- Active Brake Assist switched off (→ page 342)
- Active Brake Assist impaired or not functioning (→ page 342)
- Active Steering Assist (→ page 329)
- Active Lane Change Assist (→ page 333)
- Active Lane Keeping Assist (→ page 350)
- Active Blind Spot Assist (on assistant display only) (→ page 349)
- READY Plug-in hybrid operation activated
- Haptic accelerator pedal (→ page 250, 252, 246)
- ECO start/stop function (→ page 243)
- HOLD HOLD function (→ page 312)
- Adaptive Highbeam Assist (→ page 198)
  Adaptive Highbeam Assist Plus (→ page 199)
- Active Stop-and-Go Assist (→ page 327)
- Slippery road surface warning
- Engine operating temperature warning lamp (→ page 235)

Vehicles with Traffic Sign Assist: detected instructions and traffic signs (→ page 342)

Important information from other driving systems may briefly appear in front of the displayed traffic signs.

Notes on operating safety

For your own safety, always observe the following points when operating mobile communications equipment and especially your voice control system:

- Observe the legal requirements for the country in which you are driving.
- If you use the voice control system in an emergency your voice can change and your telephone call, e.g. an emergency call, can thereby be delayed.
- Familiarize yourself with the voice control system functions before starting the journey.

ⓘ **The voice control system does not replace the Operator's Manual.**
The answers from the voice control system do not provide the complete scope of information contained in the Operator's Manual. The voice control system also does not give detailed warning or damage information. Therefore read the Operator's Manual so that you are fully informed about the functions and the safe operation of the vehicle.

Operation

Function of the MBUX Voice Assistant

You can watch an animation on this topic via the following link:

Using the MBUX Voice Assistant, vehicle functions and various areas of the MBUX multimedia system can be operated by voice input, e.g. Navigation or Telephone. The MBUX Voice Assistant is operational about half a minute after switching on the vehicle and can be operated from all seats (depending on the special equipment).

Conducting a dialog

Requirements:

- Voice activation is activated in the multimedia system (→ page 413).
- For corrections during output, the Speak During Voice Output option must be activated in the multimedia system (→ page 413).

Starting a dialog

▶ Say **Hey Mercedes** to activate the MBUX Voice Assistant.

or

▶ Press the button on the multifunction steering wheel.
A wave appears in the MBUX multimedia system. The dialog can be started.

For the dialog with the MBUX Voice Assistant, you can use complete sentences of colloquial language as voice commands. Voice activation can also be combined directly with a voice command, e.g. **Hey Mercedes, how warm is it outside?**

Interrupting the dialog

▶ During the dialog say **Pause**.
The dialog is interrupted.

▶ Say **Hey Mercedes** to continue the dialog.

Correcting an entry

▶ During the dialog say **Correction**.

or

▶ Interrupt the system's voice output.

Changing dialog level

- During the dialog, say **Back**.
  The MBUX Voice Assistant jumps back to the previous dialog step.
- During the dialog, say **From the beginning again**.
  The MBUX Voice Assistant jumps to the highest dialog level.

Navigating in the selection list

If a voice command does not achieve a clear result, a selection list is shown.

- Say the line number or the content to select an entry or to have further details shown.
- Say **Next page** or **Previous page** to browse the selection list.

Calling up help

- **For information about the MBUX Voice Assistant:** say **Hey Mercedes, what can you do?**.
- **Current application:** say **Help**.
  You will receive suggestions and information about operation of MBUX Voice Assistant for the current application.
- **Specific function:** call up the voice command for the required function, for example with **Hey Mercedes, I need help with the radio.**
- **Digital Operator's Manual:** say **Show me the Operator's Manual**.
  The full extent of the Digital Operator's Manual is available on the central display when the vehicle is stationary.

Overview of the operable functions of the MBUX Voice Assistant

You can use the MBUX Voice Assistant to operate the following functions depending on the vehicle equipment:

- Telephone
- Text messages and e-mails
- Navigation
- Radio and media
- Vehicle functions
- Online functions

Full functionality of the voice control system is only available for you with activation of online voice control (→ page 413).

Information on the language setting

You can change the language of the MBUX Voice Assistant via the system language settings (→ page 447). If the set system language is not supported by the MBUX Voice Assistant, English will be selected.

Setting functions of MBUX Voice Assistant using the multimedia system

Multimedia system:

→ [⌂] ▸▸ Settings ▸▸ System ▸▸ Voice Assistant

Switching voice activation of MBUX Voice Assistant on or off

- Select Hey Mercedes.
  When the function is active, the **Hey Mercedes** voice command can activate the dialog.

Switching direct commands on or off

- ▶ Select ⚙.
- ▶ Activate or deactivate the function.
  If the function is active, some commands can be used without Hey Mercedes, for example Next track.

Switching voice activation for individual seats on or off

- ▶ Select ⚙.
- ▶ Switch the function for the desired seats on or off.

Switching voice interruption on or off

- ▶ Select More Settings.
- ▶ Select Speak During Voice Output.
  If the function is active, a command can be interjected during voice output of the system.

Switching proactivity on or off

- ▶ Select More Settings.
- ▶ Select the desired situation, e.g. Profile Activation or Don't Forget Your Phone.
  When the function is active, the voice assistant proactively provides information in specific situations.

Activating or deactivating online voice control

ⓘ Online voice control is activated at the factory.

- ▶ Select Online Voice Control.
- ▶ Activate or deactivate the function.
  If the function is activated and a Mercedes me user account is linked to the vehicle, additional results are available through the provision of external information, e.g. information on POIs. By clicking the symbol in the wave, more information about the online voice control can be displayed.

Activating or deactivating contacts for online use

- ▶ Select Contacts for Online Use.
  When the function is active, contacts will be found more easily and accurately using voice input.

Using MBUX Voice Assistant effectively

Notes on optimum use of MBUX Voice Assistant

- The MBUX Voice Assistant is operational half a minute after switching on the vehicle and can be operated from all seats, depending on the equipment installed. The system recognizes from which seat the command was spoken and performs actions according to the seat position.
- When a dialog is ended, the MBUX Voice Assistant continues to be active for as long as the wave is displayed in the multimedia system. You can say another voice command without saying Hey Mercedes.
- Using the direct command Change language to English, the system language can be changed to English without Hey Mercedes. Direct commands must be activated for this.
- If a user profile has been stored and is active, the MBUX Voice Assistant can make suggestions based on the habits of the user. If the voice commands are not clear, the system

selects an action. The action can be corrected with a new voice command.

Say **Hey Mercedes, load my personal profile**, to activate the profile. The user's voice must first be learned by the system and assigned to a profile.

Further information on user profiles (→ page 432).

- With the MBUX Voice Assistant, incoming calls can be accepted or rejected without the keyword **Hey Mercedes**.

Information on the MBUX online voice assistant

The online voice control facilitates recognition and thanks to external information makes additional results available.

Therefore, Mercedes-Benz recommends that you activate online voice control (→ page 413).

You will need a Mercedes me user account for this. If you do not yet have a user account you have to create one and connect it with your vehicle (→ page 431).

Then call up your Mercedes me user account. The Mercedes me services are shown and can be activated (→ page 434).

By clicking on the symbols displayed in the wave, further information on the online status is displayed.

When online voice control is active, additional functions are available such as:

- Weather
- General knowledge
- Public holidays and school holidays
- Smarthome
- Messages
- Time, date and time zones
- Pocket and currency calculator
- Football results and fixture lists
- Share prices
- Calendar
- ChitChat
- Horoscope
- Geo Quiz

ⓘ The availability of these functions is country and equipment-dependent.

ⓘ Text content is taken from Wikipedia in accordance with the CC BY-SA 3.0 license.

Essential voice commands

Notes on voice commands

It is not necessary to use exact voice commands to call up a specific function. The MBUX Voice Assistant also understands you when you use your colloquial speech. Some examples are listed below. For some languages however these examples are only available to a limited extent.

Examples of voice commands:

- Navigation (→ page 416)
- Telephone (→ page 416)
- Radio and TV (→ page 416)
- Media player (→ page 416)
- Messages (→ page 417)
- Vehicle functions (→ page 417)
- Online functions (→ page 418)

Examples of navigation voice commands

You can operate the navigation system using the MBUX Voice Assistant. The following list offers just a small selection of the possible navigation commands. You will receive additional suggestions if you say Help for navigation.

- Drive me home.
- Where is the nearest service station?
- Is there a service area along the route?
- Set Covent Garden as intermediate destination.
- Cancel the route guidance.
- Show my last destination.
- I want to buy juice.
- Search for an Asian restaurant, but not Japanese, in South London.

Examples of telephone voice commands

You can operate phones connected with MBUX multimedia system the using the MBUX Voice Assistant. The following list offers just a small selection of the possible telephone commands. You will receive additional suggestions if you say Help for phone.

- Call Peter Miller on the mobile phone.
- Dial 0711 17 0.
- Call my father.
- Accept call
- Reject call
- Search for the contact Peter Miller.
- Switch to address book
- Show me the incoming calls.
- Switch the phone

Examples of radio and TV voice commands

Depending on the vehicle equipment, you can operate the radio and TV using the MBUX Voice Assistant. The following list offers just a small selection of the possible radio or TV voice commands. You will receive additional suggestions if you say Help for radio or Help for TV.

- Play the radio station Heart FM.
- Next station.
- Previous station.
- Show me the list of radio stations
- Save the station
- What am I listening to?

Examples of media voice commands

You can operate connected media sources and online music using the MBUX Voice Assistant. The following list offers just a small selection of the possible media voice commands. You will receive additional suggestions if you say Help for media or Help for player.

- Play Michael Jackson.
- Play "Yellow Submarine' by the Beatles.
- Next track.
- Previous track.
- Play similar track.
- Repeat this track.
- Switch on random playback.
- Mute the music.

- Switch to USB.

Examples of message voice commands

Messages can be created, edited and listened to using the MBUX Voice Assistant. The following list offers just a small selection of the possible message commands. You will receive additional suggestions if you say Help for messaging.

- Write a text message to Jane Doe: When will the next meeting take place?
- Show me my new e-mails.
- Write an e-mail to Jane Doe.
- Read me my new text messages.
- Show all new text messages.
- Write an e-mail to John Doe in English

Examples of vehicle voice commands

You can operate vehicle settings and vehicle functions using the MBUX Voice Assistant. The following list offers just a small selection of the possible vehicle voice commands.

ⓘ If no seat is mentioned for commands, the action is carried out automatically for the seat from which the command was spoken or for the function which is closest to that seat.

- Switch the seat heating to level 2.
- My feet are cold.
- Start the Refresh program.
- Switch the massage function on.
- I would like to set the ambient light to blue
- Switch on the reading lamp.
- Turn off the rear light.
- Open all the windows.
- Switch the driver display to 3D.
- How fast can I drive here?
- Tell me my next service appointment
- How warm is it outside?

Information about the vehicle can also be requested:

- Information about individual items of the vehicle equipment
  - Hey Mercedes, which massage programs do you have?
  - Hey Mercedes, do I have Blind Spot Assist?
  - Hey Mercedes, where is the warning triangle?
- Information about functioning of the systems and components installed in the vehicle
  - Hey Mercedes, what is DISTRONIC?
  - Hey Mercedes, what do I need ESP for?
  - Hey Mercedes, what is MBUX?
- Information about operating the systems and components installed in the vehicle
  - Hey Mercedes, how do I connect my smartphone?
  - Hey Mercedes, how can I turn on the high beam headlamps?
  - Hey Mercedes, how do I stop the ionization function?

You can also use the vehicle voice commands to directly call up the menus for the plug-in hybrid

settings and operate the corresponding vehicle functions.

- "Display the energy flow."
- "Switch to charging settings."
- "Activate pre-entry climate control."
- "Where is the nearest charging station?"
- "How far can I still drive?"
- "Set the departure time to tomorrow morning at 8 am."

Examples of online functions

Depending on the country, language and vehicle equipment, additional functions are available when online voice control is active. The system accesses external information and can, as a result, answer general knowledge questions and make calculations, for example.

- Is the sun shining in Manchester?
- Is it raining at my destination?
- What are the skiing conditions on the Zugspitze?
- What's the time in Sydney now?
- In which country do you pay with dollars?
- How many Swiss franks make 25 euros?
- How long now until the holidays?
- What day is it tomorrow?
- What is 20 % of 29?
- What does my horoscope say?
- What is the price of Mercedes-Benz Group shares?
- Let's play Geo Quiz.
- I'm bored.
- Who is the current President?
- What do you know about the Globe Theatre in London?
- Who painted the picture "The Scream"?
- What's the status in the Premier League?
- Create a calendar entry tomorrow at 9 am.
- What's my next task?
- Tell me a joke.
- How many languages do you speak?
- What is your favorite animal?
- Are there any updates?
- Is the light still on in the kitchen?
- Switch off all the devices in my house.
- Please set the temperature in the living room to 24 degrees.

Direct command examples

With direct commands, some functions can be operated without first saying the voice command Hey Mercedes. To use direct commands, the function must be activated in the multimedia system (→ page 413).

- Next TV channel
- Previous TV channel
- Next radio station
- Previous radio station
- Next station
- Previous station
- Next track
- Previous track
- Start dashcam recording

- Stop dashcam recording
- Show the map
- Map 3D view
- Map 2D view
- Align map to north
- Align map in direction of travel
- Show all routes
- Show traffic
- Navigate to work
- Navigate home
- Listen to guidance instructions
- Cancel route guidance
- Change language to English

Overview and operation

Overview of the MBUX multimedia system

WARNING Risk of distraction from information systems and communications equipment

If you operate information systems and communication devices integrated in the vehicle when driving, you could be distracted from the traffic situation. This could also cause you to lose control of the vehicle.

- Only operate this equipment when the traffic situation permits.
- If you cannot be sure of this, stop the vehicle whilst paying attention to road and traffic conditions and operate the equipment with the vehicle stationary.

You must observe the legal requirements for the country in which you are currently driving when operating the multimedia system.

NOTE Increased surface temperature due to direct sunlight on the central display

The surface of the central display is very dark.

If the display is exposed to direct sunlight, the surface can become very hot.

- If the central display has been exposed to direct sunlight, allow it to cool down before touching it for a long time.

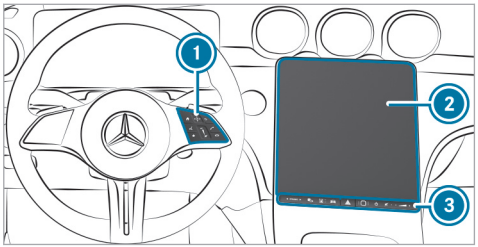

1. Touch Control and control panel for the MBUX multimedia system
   MBUX stands for Mercedes-Benz User Experience.
   - Operates Touch Control (→ page 428)
2. Central display with touch functionality
   - Home screen overview (→ page 427)
   - Operates the touchscreen (→ page 429)
3. Switch panel with:
   - Fingerprint sensor
   - Switches the MBUX multimedia system on or off, switches the central display off
   - Switches sound on or off
   - Adjusts the volume

ⓘ Alternatively, the MBUX Voice Assistant allows voice dialog. Operation with natural speech starts after the wake-up call "Hey Mercedes" (→ page 412). You can start a voice navigation, for example, with the input of a three-word address from what3words.

Numerous application, online services, services and apps are available for you. These can be called up via the home screen.

You can conveniently call up your favorites using the ★ button on the steering wheel. Quick-access in the home screen and in the applications serve to select functions more quickly.

If you use the learning function of the multimedia system, you will receive suggestions during operation of the most probable navigation destinations, media sources, radio stations and contacts. The configuration of the suggestions is completed in the system settings. You can compile your user profile from various vehicle settings and settings of the multimedia system. Some functions and services are protected by a PIN. You can teach in biometric procedures to identify yourself with these instead of the four-digit Mercedes me PIN.

The Notifications Center collects incoming notifications, e.g. about an available software update. Depending on the type of notification it offers various actions. The call is made via the Control Center.

With the global search, you can search on the home screen via categories, e.g. in the navigation, and on the internet.

Anti-theft protection

This device is equipped with technical provisions to protect it against theft. Further information on anti-theft protection can be obtained at an authorized Mercedes-Benz Center.

Overview of the MBUX multimedia system (Mercedes-AMG vehicles)

WARNING Risk of distraction from information systems and communications equipment

If you operate information systems and communication devices integrated in the vehicle when driving, you could be distracted from the traffic situation. This could also cause you to lose control of the vehicle.

- Only operate this equipment when the traffic situation permits.
- If you cannot be sure of this, stop the vehicle whilst paying attention to road and traffic conditions and operate the equipment with the vehicle stationary.

You must observe the legal requirements for the country in which you are currently driving when operating the multimedia system.

NOTE Increased surface temperature due to direct sunlight on the central display

The surface of the central display is very dark.

If the display is exposed to direct sunlight, the surface can become very hot.

- If the central display has been exposed to direct sunlight, allow it to cool down before touching it for a long time.

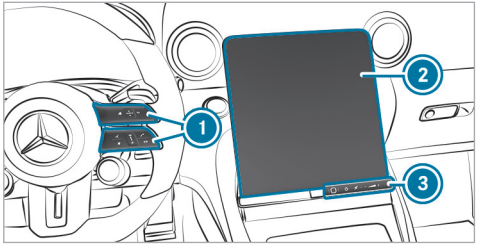

1 Touch Control and control panel for the MBUX multimedia system
MBUX stands for Mercedes-Benz User Experience.

- Operates Touch Control (→ page 428)

2 Central display with touch functionality
- Home screen overview (→ page 427)
- Operates the touchscreen (→ page 429)

3 Switch panel with:
[▣] Fingerprint sensor
[⏻] Switches the MBUX multimedia system on or off, switches the central display off
[🔇] Switches sound on or off
[-▬+] Adjusts the volume

ⓘ Alternatively, the MBUX Voice Assistant allows voice dialog. Operation with natural speech starts after the wake-up call "Hey Mercedes" (→ page 412). You can start a voice navigation, for example, with the input of a three-word address from what3words.

ⓘ If the vehicle is equipped with the MBUX Interior Assistant, vehicle and infotainment functions can be used. The interaction then follows intelligently, reactively or with hand or head movements.

Numerous application, online services, services and apps are available for you. These can be called up via the home screen.

You can conveniently call up your favorites using the [★] button on the steering wheel. Quick-access in the home screen and in the applications serve to select functions more quickly.

If you use the learning function of the multimedia system, you will receive suggestions during operation of the most probable navigation destinations, media sources, radio stations and contacts. The configuration of the suggestions is completed in the system settings. You can compile your user profile from various vehicle settings and settings of the multimedia system. Some functions and services are protected by a PIN. You can teach in biometric procedures to identify yourself with these instead of the four-digit Mercedes me PIN.

The Notifications Center collects incoming notifications, e.g. about an available software update. Depending on the type of notification it offers various actions. The call is made in the home screen via the Control Center.

With the global search, you can search on the home screen via categories, e.g. in the navigation, and on the Internet.

Anti-theft protection

This device is equipped with technical provisions to protect it against theft. Further information on anti-theft protection can be obtained at an authorized Mercedes-Benz Center.

Zero layer

Function of the zero layer

ⓘ Your software can be upgraded to a more current version at a later date.

The zero layer provides you with dynamic content from the MBUX multimedia system and is used to quickly access and control the applications you use. When you select [⌂] on the central display, the digital map with the applications appears in the lower display area. Compared to the home screen with a classic menu, the steps required to call up the applications are reduced. You can switch between the zero layer and the home screen with a classic menu.

The applications can be hidden from the display area and shown again.

The zero layer provides the following modules and applications:

- Navigation module

  In the expanded view you can, for example, display the route overview, switch on the display of traffic information and make settings for View (map), Messages & Acoustic Signals, Route.

- Entertainment (media, radio) and telephone

  When the lower display area is shown, the entertainment sources are always displayed.

  A mobile phone must be connected to the MBUX multimedia system for the phone to be displayed.

- Active applications

  The lower display area shows an active massage program, for example.

- Suggestions

  Suggestions are displayed on the lower display area based on context and your user behavior. Here are a few examples:

  - Latest calls
  - Active massage programs
  - Vehicle functions
  - Online voice applications

The applications are first displayed in a reduced view. By tapping on them, you can operate them or open the associated menu (expanded view).

A long press on a suggestion opens a context menu in which further functions are available.

The learning function can be switched on and off for the options (→ page 448).

Overview of the zero layer

Digital map and user-specific applications (example)

1. Navigation module (reduced view)
2. Enters a destination (→ page 34)
   Searching for a parking space, in the vicinity for example

3. Calls up the Control Center (pull the bar down)
4. Status line
5. Calls up user profile settings
6. Content sharing menu (if available)
7. Telephone

   Requirement for phone: the mobile phone is connected to the MBUX multimedia system.
8. Entertainment sources (media, radio)
9. [⌂]

   Press briefly: shows all applications (→ page 425)

   Press and hold: calls up the home screen with classic menu (→ page 427)
10. Route monitor

    e.g. route list, lane recommendations, toll stations, 3D image of the upcoming driving maneuver

The zero layer shows the digital map and the user-specific applications.

The following user-specific applications are displayed in the lower display area:

- Suggestions

  Requirement: suggestions are activated (→ page 448).
- Active applications

  e.g. a massage program

  e.g. Active Parking Assist
- Telephone 7
- Entertainment sources 8
- Online voice applications

The lower display area can be hidden and shown (→ page 425).

Information about entertainment sources

You can operate the applications in the reduced view or in the menu (expanded view) (→ page 425).

Examples:

- Control a media source, e.g. pause/play, next track, set a station
- Select tracks from the current playlist or stations from the station list
- Select a media source

  The media source must be connected to the MBUX multimedia system.

Information about the telephone

To use the functions, the mobile phones must be connected to the MBUX multimedia system.

Requirement for suggestions: the Calls & Messages option is activated in the suggestions.

Examples:

- Answer a call and call a missed call

  The missed calls are displayed for the mobile phones connected to the MBUX multimedia system.
- Display contacts and call list and call a contact
- Use voice functions
- Suggest contacts

  The contacts are suggested for the mobile phones connected to the MBUX multimedia system. No contacts are suggested for the

mobile phones that are linked to another user profile.
- Write messages to contacts (suggestion)
- Connect a device via the device manager (suggestion)

Information about active applications

The following functions are available:
- Operating a massage program
- Raising or lowering the vehicle level

Suggestions for comfort and vehicle functions as well as navigation

Requirement: the Comfort, Vehicle and Navigation options are activated in the suggestions.
- Operating a massage program

  For example, the multimedia system suggests a program at a certain time.
- Opening the tailgate

  Requirement: the vehicle is equipped with trunk lid convenience closing.
- Setting the vehicle level
- Making heating settings
- Activating/deactivating Parking Assist PARKTRONIC
- Selecting previous destinations and destinations from favorites

Suggestions for online voice applications

Requirement: the Online Voice Services option is activated in the suggestions.

The suggested voice applications are made available online and are based on your previous voice inputs.

Examples:
- What will the weather be like tomorrow?
- Play the messages.
- Start geoquiz.
- Open the garage door.

Calling up and operating the zero layer

Calling up the zero layer

When the vehicle has been switched on, the zero layer is displayed with the digital map. Navigation is active.

▶ **From another application:** press the [⌂] button on the right side of the steering wheel.

or

▶ Tap on [⌂].

Operating applications in the reduced view (examples)

▶ **Media:** to play the previous or next track, tap [⏮] or [⏭].

▶ **To answer a call or call a missed call:** tap on the contact.
After the connection has been established, the call functions are available.

▶ **To end a call:** tap on the contact again.

▶ **To reply to a message:** tap on a message and dictate the message via the MBUX Voice Assistant.

▶ **To start a massage program:** tap on the application and start the massage program.

▶ **To select a previous destination:** tap on the application and select one of the previous destinations.

▶ **To select a destination from the favorites:** tap on the application and select the destination.

Hiding and showing the display area with applications

▶ **To hide:** pull the applications down.
▶ **To show:** pull the bar above [⌂] upwards.

or

▶ Select [⌂].

or

▶ Press the [⌂] button on the steering wheel on the right.

Navigation module (expanded view)

Example: route guidance is active

1. Destination
2. Searches for a gas station
3. Switches traffic information display on or off

▶ Tap on the navigation module (→ page 423).
▶ Select Route in the lower menu bar.

Operating a menu in the lower display area (example: active massage program)

1. Selects a massage program
2. Starts/stops a massage program for the driver
3. Starts/stops a massage program for the front passenger
4. Sets the relaxation intensity for the driver's or front passenger seat

▶ Tap on the application.
The expanded view of the application is displayed.
▶ **To close the menu:** select [↩].

Opening and closing the context menu for a suggestion

- Press and hold on a suggestion.
  The context menu opens and shows the No Longer Suggest option, for example.
- **To close:** swipe downwards.

Removing a suggestion from the display area

- Swipe the suggestion upwards.

Showing all applications

- Briefly press [⌂].
  Available applications are displayed. The global search is available.
- **To hide applications:** briefly press [⌂] again.

Switching between the zero layer and home screen with classic menu

- Press and hold on [⌂].
  The home screen with classic menu is shown.
- **To return to the zero layer:** press and hold on [⌂].

Home screen overview

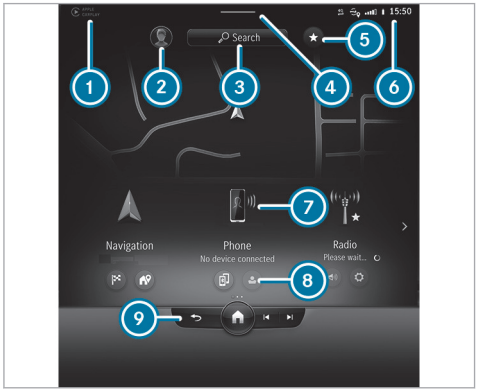

1. Status line
2. Calls up user profile settings and switches user
3. Uses the global search
4. Calls up the Control Center: pull the bar down
5. Calls up favorites
6. Displays in the status line
7. Calls up applications
8. Quick-access to application
9. Global menu
   - [↩] Calls up previous menu
   - [⌂] Press and hold: switches between home screen and zero layer
   - [⏮] Previous track or previous radio station
   - [⏭] Next track or next radio station

ⓘ During a telephone call, the call duration is displayed in global menu 9.

Alternatively, to switch between the home screen and the zero layer, press and hold the [⌂] button on the right-hand side of the steering wheel.

The following functions are called up in the Control Center:

- Notifications Center
- Favorites
- Vehicle quick-access

Touch Control

Operating Touch Control (MBUX multimedia system)

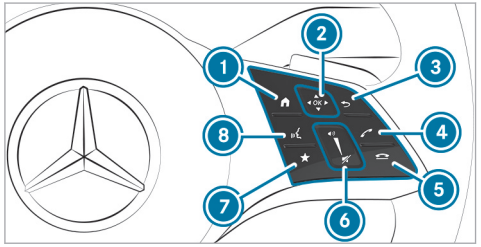

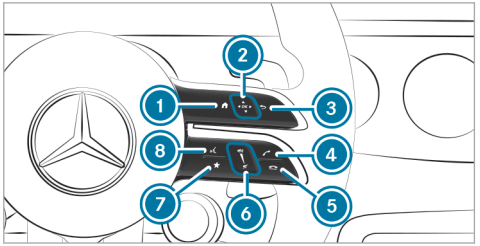

Mercedes-AMG vehicles

1. Shows zero layer/home screen
2. Touch Control
   ◀ ▲ ▶ ▼ Swipe in the direction of the arrow (navigate)
   OK Press (confirm)
3. Returns to the previous display
4. Makes or accepts a call
5. Rejects or ends a call
6. To increase volume: swipe upwards
   To reduce volume: swipe down
   To switch off the sound: press
7. Calls up favorites
8. Starts the MBUX Voice Assistant

ⓘ To operate Touch Control ② in the most effective way, use the tip of your thumb if possible.

You can navigate through menus and lists via the touch-sensitive surface of Touch Control ② using **a single-finger swipe**, for example:

- ▶ **To enter a character:** select a character using the keyboard and press on Touch Control ②.
- ▶ **To select a menu option:** scroll in a list and press Touch Control ②.
- ▶ **To move the digital map:** swipe in any direction.

Setting the sensitivity for Touch Control

Multimedia system:

→ ⌂ ▸▸ Settings ▸▸ System ▸▸ Control Elements ▸▸ Touch Control Sensitivity

- ▶ Select Fast, Medium or Slow.

Setting acoustic operational feedback for all control elements

Multimedia system:

→ [⌂] ▸▸ Settings ▸▸ System ▸▸ Control Elements ▸▸ Acoustic Feedback

The function is supported by the selection in a list.

▶ Set Off, Regular or Loud.
If the function is activated you will hear a clicking sound when selecting control elements or when scrolling in a list. When the beginning or end of the list is reached you will hear another clicking sound.

Touchscreen

Operating the touchscreen

Tapping

▶ **To select a menu item or entry:** tap on a symbol or an entry.

▶ **To increase the map scale:** tap twice quickly with one finger.

▶ **To reduce the map scale:** tap with two fingers.

▶ **To enter characters with the keypad:** tap on a button.

Single-finger swipe

▶ **To navigate in menus:** swipe up, down, left or right.

▶ **To move the digital map:** swipe in any direction.

▶ **To use handwriting to enter characters:** write the character with one finger on the touchscreen.

Two-finger swipe

▶ **To zoom in and out of the map:** move two fingers together or apart.

▶ **To enlarge or reduce the size of a section of a website:** move two fingers together or apart.

▶ **To turn the map:** turn counter-clockwise or clockwise using two fingers.

Three-finger swipe

▶ **To call up the home screen:** swipe up with three fingers in an application.

Touching, holding and moving

▶ **To move the map:** touch the touchscreen and move your finger in any direction.

▶ **To set the volume on a scale:** touch the touchscreen and move the finger to the left or right.

Touching and holding

▶ **To save the destination in the map:** touch the touchscreen and hold until a message is shown.

▶ **To call up a global menu in the applications:** touch the touchscreen and hold until the Options menu appears.

Setting haptic operation for the touchscreen

Multimedia system:

→ [⌂] ▸▸ Settings ▸▸ System ▸▸ Control Elements ▸▸ Display Haptics

▶ Set Off, Regular or High.
If the function is switched off, all you need to do is tap the display to make an entry.

If the function is switched on, the entry is made by pressing the display. The system sup-

ports you with discreet tactile aids and pressure resistances.

Overview of the fingerprint sensor

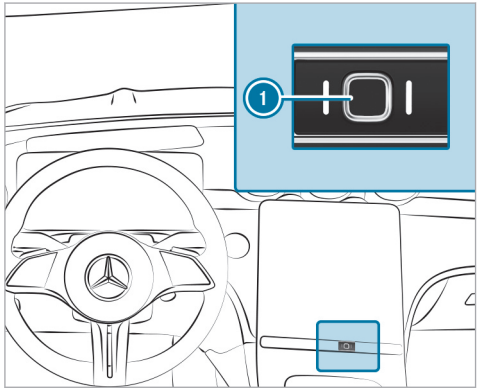

Fingerprint sensor (1) allows you to conveniently access protected MBUX multimedia system functions and services. Compared to protection provided by the Mercedes me PIN, the entry of a four-digit number is not required to activate services and functions with personal content.

The fingerprint sensor must be set up before use (→ page 432).

ⓘ The fingerprint sensor stores only a data model and no image of the fingerprint. The data model is only processed in the vehicle and is not transmitted from the vehicle.

User

Notes on user profiles

⚠ WARNING Risk of becoming trapped during adjustment of the driver's seat after calling up a driver profile

Selecting a user profile may trigger an adjustment of the driver's seat to the position saved under the user profile. You or other vehicle occupants could be injured in the process.

▶ Make sure that when the position of driver's seat is being adjusted using the multimedia system, no people or body parts are in the seat's range of movement.

If there is a risk of someone becoming trapped, immediately stop the adjustment process by:

▶ a) Pressing the warning message on the central display.

or

▶ b) Pressing a position button of the memory function or a seat adjustment switch in the driver's door.
The adjustment process is stopped.

The driver's seat is equipped with an anti-entrapment feature.

If the driver's door is open, the driver's seat will **not** be set after calling up the driver's profile.

Overview of user profiles

Requirements for use

- You have a Mercedes me user account.
- You have a Mercedes me PIN.
- You have agreed to the terms of use.
- The vehicle is linked to a Mercedes me user account.

ⓘ If one of the pre-requisites listed is missing or if no user profile has been selected, the data described in the following section will be saved in the vehicle as the standard setting. Standard settings can be changed by all vehicle users.

User profiles save personal settings. If the vehicle is used by several people, a person can change their profile settings without changing the settings of other users.

You can individualize a user profile in the vehicle using the set-up assistant or using the settings in your user profile. Some settings, e.g. the Mercedes me PIN and a profile photo are made in the Mercedes me App or in the Mercedes me Portal.

ⓘ If the user profile is downloaded while traveling, user profiles are not set up using the set-up assistant.

User-specific content and applications with personal data are protected by different levels of security (→ page 432).

To access protected content, the Mercedes me PIN and, depending on the vehicle equipment, biometric sensors are used.

ⓘ The security level is set by the multimedia system and calculated from the combination of all sensor inputs. Some security levels cannot be turned off.

ⓘ When a user profile is activated, the following personalized comfort systems, for example, can be adjusted or their settings loaded:

- Seat
- Ambient light
- Outside mirrors
- Climate control settings

If the user profile is activated when driving then the driver's seat position will not be adjusted.

User-specific content

Depending on the vehicle equipment you can, as a user, save the following settings, for example:

- Driver's seat, steering wheel and mirror settings
- Climate control
- Ambient light
- Radio (including station list)
- Suggestions and favorites

You can watch an animation on this topic via the following link:

Adding a user

Requirements:

- The vehicle is stationary.

Multimedia system:

→ ⌂ » 👤 » Select User

▶ Select ⊕ Add User.
A QR code is loaded.

▶ Scan the displayed QR code with the Mercedes me App or any QR code scanner on

a mobile device. If the Mercedes me App is not yet installed on your mobile device, you will be directed to the store of your mobile device.

▶ Follow the steps in the Mercedes me App. The vehicle is connected with your Mercedes me user account. This automatically creates your user profile in the vehicle.

You will be informed when your user profile is available.

When the vehicle is stationary, the set-up assistant starts automatically after user selection.

ⓘ When the user has been added, they can be selected (→ page 434).

Selecting user options

Multimedia system:

→ ⌂ » 👤 » Settings

Protecting user-specific content and applications

If you add a new user, access protection is already activated for the user profile. The Mercedes me PIN and, depending on the vehicle equipment, biometric sensors are available for access. Biometric sensors in the vehicle must be taught in. The authentication process then takes all taught-in and available sensors into account.

The following user-specific content and applications are protected, for example:

- User selection and user profile settings
- Biometric sensors

  The teaching-in of biometric sensors

  For teaching in and editing biometric recognition see the following section.
- Suggestions

  The data and determination of the most probable navigation destinations, media sources, radio stations, contacts and messages.
- ENERGIZING COACH

  The recorded health data and its evaluation.
- Parking service

  The payment transactions.
- Mercedes me Store

  The purchase of services.
- System activations of paid vehicle functions

In the following cases you will be prompted for authentication or re-authentication using a sensor or the Mercedes me PIN:

- When selecting a protected user profile
- When calling up a function requiring special protection
- If biometric sensors provide insufficient or contradictory information
- If the multimedia system no longer trusts a sensor
- If the seat belt buckle and the door are opened at the same seat and a function requiring special protection is called up
- When the vehicle is locked from outside

▶ Select Protect Content.

▶ Switch Access Protection on or off.

ⓘ When access protection is switched off, your user profile can be viewed from any seat and changes can be made.

ⓘ Access protection is switched on or off on a vehicle-specific basis.

ⓘ Note that authentication is necessary for some functions and therefore cannot be switched off completely.

Setting up and editing biometric recognition

The biometric data models are saved in the sensors in the vehicle. If recognition has been set up, this sensor serves as a contributory factor for authentication on the multimedia system.

▶ Select Protect Content.

▶ Select Fingerprint Recognition or Voice Recognition.

ⓘ If necessary, authenticate yourself on the multimedia system.

Setting up fingerprint recognition

▶ Place and lift your finger several times on the fingerprint sensor under the touchscreen (→ page 430).
The finger is scanned. If the scanning procedure is successful, a message appears on the central display. You can unlock your user profile and protected applications with your fingerprint.

Setting up voice recognition

▶ Speak the sentence shown on the central display and follow the voice assistant's instructions.
If the voice recognition was successful, a message appears on the central display. You can unlock your user profile.

ⓘ Avoid background or disturbing noises during voice recognition.

Deleting biometric data

▶ Tap on 🗑, for example, behind Fingerprint Recognition.

▶ Select Yes.

Calling up the set-up assistant

▶ Select Profile.

▶ Select Set-up Assistant.

▶ Follow the directions from the set-up assistant.

Changing a user name or profile photo

▶ Select Profile.

▶ Select Change User Name.

or

▶ Select User Image.

▶ Enter the user name or select a user image.

▶ Select Finish.

ⓘ You can store your photo in the Mercedes me user account using the app or in the portal. The photo will then be shown in the vehicle. In the vehicle itself, you can select other sample images instead of the photo.

Deleting a user profile

▶ Select Profile.

▶ Select Remove.

▶ Select Remove User Profile.

ⓘ Your Mercedes me user account and your personal data will remain within the Mercedes me ecosystem.

Resetting the user profile to factory settings

▶ Select Profile.

▶ Select Reset.

▶ Select Yes.

ⓘ This resets the contents of the user profile to factory settings, but not the vehicle.

You can watch an animation on this topic via the following link:

Selecting a user

Multimedia system:

ⓘ When you call up your driver profile, the driver's seat and the steering wheel can be set.

You can cancel the setting process with the following actions:

- Press Tap Here to Cancel message on the central display.
- Press one of the seat operating buttons in the driver's door.

▶ Select Select User.

▶ Select a user.

▶ When requested to do so, authenticate with the Mercedes me PIN or a taught-in biometric characteristic.
The user profile is loaded and activated.

ⓘ If you select Continue Without Selecting a User, no specific settings for the user profile are loaded.

Synchronizing user profiles

Requirements:

- You have a Mercedes me user account.
- The vehicle is connected with your Mercedes me user account.

Multimedia system:

Synchronization

▶ Activate Synchronize Automatically.
When the vehicle is switched on or off, the data stored in the vehicle is automatically synchronized with the Mercedes me user accounts. This synchronization is done for all user profiles and is not profile-specific.

or

▶ Select Synchronize Now.
After selecting this option, the data stored in the vehicle is synchronized with the Mercedes me user accounts.

ⓘ Not all user profile functions are available during synchronization.

ⓘ If the personalization service in the vehicle is deactivated, only the following user profile master data is synchronized:

- Profile name
- Profile image
- Mercedes me PIN

Favorites

Overview of favorites

Favorites offer you quick access to frequently used applications. 100 favorites are available in total.

You can select favorites from categories or you add favorites directly from an application.

Calling up favorites

Multimedia system:

- Alternatively, in the home screen pull down bar ④ in the center of the status line (→ page 427).
- Select ★ in the Control Center.

Adding favorites

Multimedia system:

Selecting favorites from categories

- Select ›.
- Select + Create New Favorite.
- Select the category.
- Select a favorite.
  The favorite is stored at the next available position.
- If all positions in the favorites are taken, confirm the message shown.
  A list shows all the favorites.
- Select a favorite to be overwritten.

Adding a favorite from an application

You can, for example, save a contact (example), or add an ENERGIZING COMFORT program.

- Select a contact (→ page 511).
- Press on a telephone number until a menu is shown.
- Select Save as Favorite.
  The contact is added as a favorite.

Renaming favorites

Multimedia system:

- Press on a favorite until a menu is shown.
- Select Rename.
- Enter the name.
- Save the names.

Moving favorites

Multimedia system:

- Press on a favorite until a menu is shown.
- Select Move.
- Move the favorite to the new position.
- Tap on ✓.

Deleting favorites

Multimedia system:

- Press on a favorite until a menu is shown.
- Select Delete.
- Select Yes.

Resetting favorites

- In the menu, select Reset All Favorites .
- Select Yes.

Notifications Center

Overview of the Notifications Center

The following communications are collected in the Notifications Center:

- Communications which are generated by the vehicle or from the multimedia system.
- Communications which are received through the use of services.

The following notification types are available for you:

- Navigable destinations and routes
- Messages (text messages)
- System information, e.g. Important Software Update Available Confirm to Start the Update
- Other notifications, e.g. from additional online services that can be subscribed to or emergency reports (e.g. tornado)

The Notifications Center is in the Control Center.

Depending on the style set, newly received notifications are shown using a colored dot.

Notifications are normally briefly shown as they are received. If you take no action, these are stored for future access in the Notifications Center.

The notifications are sorted chronologically. The most recent notifications are at the top.

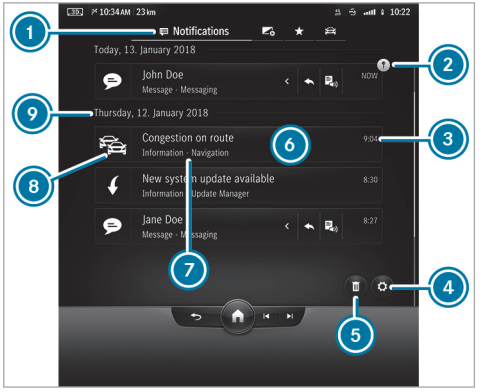

Example of a message

1. Calls up the Notifications Center
2. Symbol for a pinned notification
3. Time message received
4. Calls up the settings
5. Deleting notifications
6. Display for available actions
7. Description of the notification and the issuing service
8. Symbol for notifications
9. Date of the received notifications

Depending on the type of notification, up to four different actions are available.

Examples of actions include:

- Reading aloud
- Placing a call
- Replying
- Calling up a web page
- Navigation

Some notifications, e.g. a navigation destination, are stored longer. Therefore, it is not necessary to carry out available actions directly upon receipt of the notifications. A route guidance can be started at a later time.

You can pin a notification so that this is not deleted automatically after a certain time. The notification is then denoted by symbol 2.

Calling up notifications

Opening the Notifications Center

▶ In the zero layer pull down bar ③ in the center of the status line (→ page 423).

or

▶ In the home screen pull down bar ④ in the center of the status line (→ page 427).
The Control Center opens.
▶ Select [ ] in the Control Center.

Selecting a notification

▶ If several messages are available swipe up or down.
▶ Select an action.

Closing the Notifications Center

▶ Select [ ].

Selecting actions for a notification

The following options are available:

- Select the action directly after a notification is received and shown.
- Select the action later after calling up in the Notifications Center.

▶ Up to two actions available: select the action.
▶ More than two actions available: select [ ].
▶ Select the action.
The notification is still available.
▶ Close the actions with [ ].

Editing notifications

▶ Call up the Notifications Center (→ page 437).

Configuring settings

▶ Select [ ] Settings.
▶ Select the service.
▶ Switch the options on or off.
The following options are available depending on the service:

- Allow Notifications
- Display in Notification Center
- Show Notifications
- Activate or deactivate Acoustic Signals
- External Access
  The option allows an external service access to specific data, e.g. the current vehicle position. The detailed, approved information is shown with ⓘ.

If Allow Notifications is switched off, the options cannot be selected with the exception of External Access.

Pinning a notification

▶ Drag a notification to the right on the touchscreen.
A pin appears.
▶ Tap on the pin.
The notification is marked with a pin.

Deleting notifications

▶ Drag a notification to the left on the touchscreen.

or

▶ Select [ ].
▶ Select Yes.
All messages are deleted.

Global search

Global search overview

You can call up the global search on the home screen. You can input characters using the keyboard or the handwriting recognition. Alternatively, the MBUX voice assistant allows voice input.

The global search provides search results for the following categories:

- Navigation
- Entertainment
- Telephone
- Digital Operator's Manual
- Internet

The global search enables you to search for towns, roads and tourist attractions in the navigation category, for example.

The global search makes it possible to enter a three-word address (→ page 466).

If the search field is empty, you will first see smart suggestions in the Suggestions category.

The prerequisite for this is that the smart suggestions are activated in the system settings (→ page 448).

As soon as a letter is entered, you will be shown the best hits in the All category. You will find further search results in the individual categories. Next to the category is the number of results.

After selecting a category you can select the search results within the category. When you select a search result, a detailed view is opened depending on the category.

Using the global search

Multimedia system:

→ [⌂] » [🔍] Search

In the Suggestions category up to six smart suggestions are displayed, even if no search entry has been entered yet.

▶ Enter the search term into the search field.
As soon as a character is entered the All category is marked. Up to ten search results per category are displayed there.

In the other categories suitable search results for the entered search item are displayed.

ⓘ Alternatively, the MBUX Voice Assistant allows voice input using [🎤] or you switch to the handwriting recognition [✍] (→ page 441).

▶ **To end the search:** select [OK].

▶ **To show search results for a category:** select a category.

▶ **To accept the search result:** select the search result.
An action starts, e.g. a radio station is set or a detailed view is displayed, e.g. for a contact.

Switching the sound for the MBUX multimedia system on or off

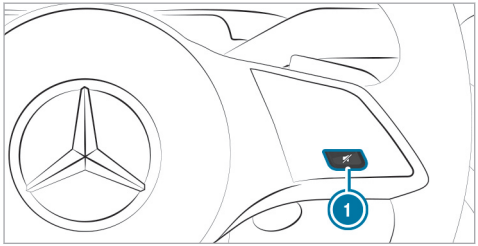

On the steering wheel

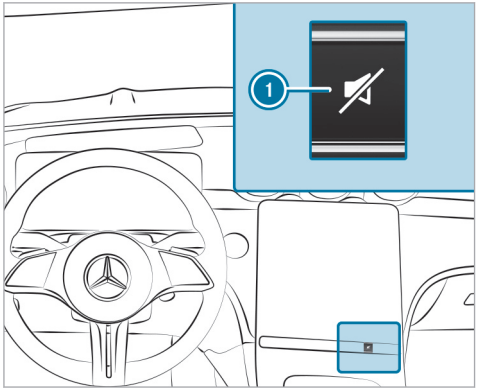

On the central display control panel

▶ **To switch off:** press button 1.
The current audio source is muted.
The [ ] symbol appears in the status line of the central display.

If you are listening to a radio station, for example, and switch off the sound then all media sources will be muted.

Traffic and navigation announcements can still be heard in this case. The MBUX voice assistant and telephony are also not affected.

Switching on

▶ Press button 1 again.

or

▶ Set the volume.

or

▶ The media source changes.

Setting the volume of the MBUX multimedia system

Setting with the button

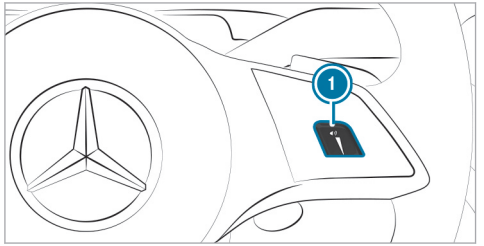

On the steering wheel

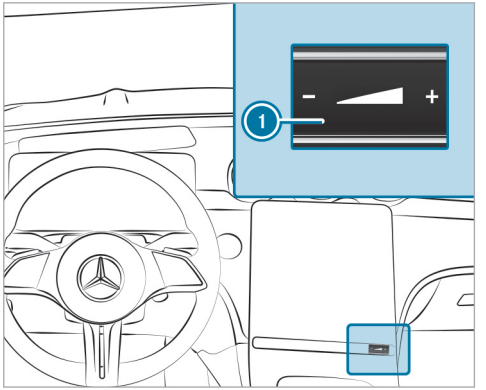

On the central display control panel

▶ Press [–] or [+] ①.

or

▶ Swipe across button ①.
The volume of the current audio source in the foreground is set.

Using the control, the volume is adjusted for the following groups:

- Entertainment
- Ringtone
- Calls, for example phone calls
- Voice output, for example MBUX voice assistant
- Navigation announcements

ⓘ If you set the volume of the voice output to "0", for example, a minimum volume is automatically set when the MBUX voice assistant is next called up. The entertainment volume is automatically adjusted after the multimedia system is restarted.

Setting in the menu

▶ Press and hold the [⌂] button on the right of the steering wheel.

or

▶ Press and hold [⌂] on the touchscreen.
The home screen appears.

▶ Select Settings.

▶ Select System.

▶ Select Audio.

▶ Select a volume setting.

ⓘ The volume can be set for all groups except the entertainment volume.

▶ Set the volume.

The following settings are also available in the Assistance menu:

- Switching the navigation announcements on or off during a phone call.
- Reducing the entertainment volume while a navigation announcement is being issued.

Entering characters

Using the character input function

Requirements:

- **For the handwriting recognition read-aloud function:** the MBUX multimedia system is equipped with the MBUX voice assistant.
- The read-aloud function is available for the selected system language.
- The handwriting recognition read-aloud function is activated.

Enter the characters on the Touch Control or on the touchscreen. Character input can be started with a control element and resumed with another.

▶ When the keypad is shown, enter the characters by swiping and pressing on the Touch Control or by tapping on the touchscreen.

or

▶ If handwriting recognition has been selected, write the characters on the touchscreen.

Examples for character input include the global search, entering a navigation destination or the renaming of a favorite, for example.

The touchscreen supports character input with the following functions:

- Handwriting recognition offers character suggestions.
- If the read aloud function is activated for handwriting recognition then the entered characters are read aloud.

Entering characters on the touchscreen

Requirements:

- If you wish to have the character input read aloud: the read aloud function of the handwriting recognition is switched on (→ page 443).
- An online connection is required for some functions.

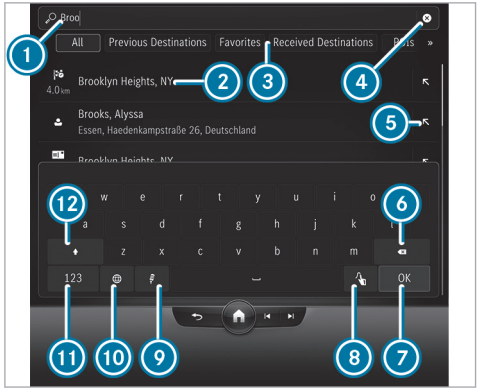

Example: character input with the keypad

1. Input line with current entry
2. Search result
3. Selects destination input, displays further destination inputs with double arrow
4. Deletes an entry
5. Adopts the search result in the input line and continues the search
6. Deletes the last character entered
7. Hides the keypad
8. Switches to handwriting recognition
9. Starts the MBUX Voice Assistant (→ page 412)
10. Sets the written language
11. Switches to digits and special characters
12. Switches to upper-case or lower-case letters

▶ Example: call up the navigation and enter a destination address (→ page 34).

▶ Briefly press on a character.
The character is entered in input line 1.

▶ Resume character input.

ⓘ The available editing functions depend on the editing task, the language set and the character level.

Entering alternative characters

▶ Press and hold on a character.

▶ Select the character.

To finish character entry

▶ Hide keypad 7.

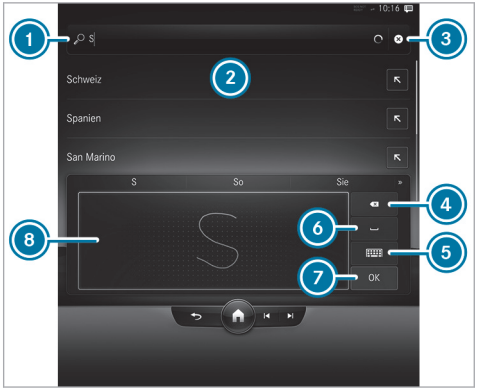

Example: entering characters with handwriting recognition

1. Input line
2. Shows suggestions during input
3. Deletes an entry
4. Last character entered
   Pressing and holding deletes the entry
5. Switches to input using the keyboard

⑥ Enters a space
⑦ Accepts an entry
⑧ Writing area

If available, the symbol allows you to change to voice input.

- When the keyboard is displayed, select .
- Write the character with one finger on the touchscreen. The letters can be written next to each other or above each other.
  The character is entered in input line ①. Suggestions are shown in ②.
- Select one of the suggestions.
- If available, display additional suggestions with or .
- **To end character entry:** press briefly on .

Setting the keyboard and handwriting recognition for character entry

Requirements

- The read-aloud function is available for the selected system language.

Multimedia system:
→ ▸▸ Settings ▸▸ System ▸▸ Keyboards and Handwriting

Setting the keyboard language

- Select Keyboard Languages.
- Select one or more keyboard languages.

Setting the writing speed

- Select Handwriting Recognition.
- Select an option, e.g. Medium.

Activating the read-aloud function

- Select Handwriting Recognition.
- Activate Read Out.
  The letter that your write on the touchscreen is read aloud.

Activating handwriting recognition on the keyboard

- Select Handwriting Recognition.
- Activate Handwriting Recognition.
  You can write characters directly on the keyboard.

Deleting the user dictionary

The user dictionary learns from your inputs and offers suggestions during character input. You can reset the user dictionary.

- Select Reset My Dictionary.
- Select Yes.

System settings

Display

Configuring display settings

Multimedia system:
→ ▸▸ Settings ▸▸ System ▸▸ Display

Adjusting the brightness

- Select Display Brightness.
- Vehicles with a driver's display and central display: Adjust the display brightness of the driver's display or central display.

Time and date

Setting the time zone

Multimedia system:

→ [⌂] ▸▸ Settings ▸▸ System ▸▸ Time and Date

▶ Select Time Zone.
The list of countries is displayed.

ⓘ If there are several time zones available in a country, these will be shown after the country is selected.

▶ Select a country and, if required, a time zone.
The time zone set is displayed after Time Zone.

or

▶ Select the Automatic Time Zone entry from the country list.
The time zone will be set automatically according to the vehicle location.

ⓘ The Automatic Time Zone option is available for vehicles with satellite reception.

Setting the time and date format

Multimedia system:

→ [⌂] ▸▸ Settings ▸▸ System ▸▸ Time and Date ▸▸ Set Format

▶ Select a time and date format.

Setting the time and date manually

Requirements:

- The vehicle does not have satellite reception.

Multimedia system:

→ [⌂] ▸▸ Settings ▸▸ System ▸▸ Time and Date

Setting the time

▶ Select Set Time.

▶ Set a time.

▶ Press OK to confirm.

Setting the date

▶ Select Set Date.

▶ Select a date.

▶ Press OK to confirm.

ⓘ On vehicles with satellite reception, the time and date settings are determined automatically based on the vehicle location and cannot be set manually.

Adjusting the time

▶ Select Adjust Time.

▶ Set a value.

▶ Press OK to confirm.

ⓘ The function is only available in vehicles with satellite reception.

Vehicle position

Switching transmission of the vehicle position on or off

Requirements:

- A Mercedes me user account is available.
- At least one service is activated in the Mercedes me user account which has access to the transmitted position data.

ⓘ The function is country-dependent. For more information, consult an authorized Mercedes-Benz Center.

Multimedia system:

→ [⌂] ▸▸ Settings ▸▸ System ▸▸ Data Protection

▶ Activate or deactivate the Transmit Veh. Position function.

ⓘ Alternatively, you can also switch the function on or off in the status line via [⚲].

Setting permissions

Multimedia system:

→ [⌂] ▸▸ Settings ▸▸ System ▸▸ Data Protection ▸▸ Permissions

In the Permissions menu, you can set access authorization for various data points (such as microphone, camera) used in an application. You can change permissions that have already been granted here. You can set permissions either for individual data points or for certain applications or websites.

▶ Select Requests or Apps/Websites.

▶ Make the required settings for the permissions.

Bluetooth®

Information about Bluetooth®

Bluetooth® technology is a standard for short-range wireless data transfer up to approximately 32.8 ft (10 m).

You can use Bluetooth® to connect your mobile phone to the multimedia system and use the following functions, for example:

- Hands-free system with access to the following options:
  - Contacts (→ page 510)
  - Call lists (→ page 512)
  - Text messages (→ page 513)
- Internet connection (→ page 531)

Bluetooth® is a registered trademark of Bluetooth Special Interest Group (SIG) Inc.

ⓘ Internet connection via Bluetooth® is not available in all countries.

Activating/deactivating Bluetooth®

Multimedia system:

→ [⌂] ▸▸ Settings ▸▸ System ▸▸ Internet and Bluetooth

▶ Activate or deactivate Bluetooth.

Wi-Fi

Wi-Fi connection overview

You can use Wi-Fi to set up a connection to the Internet or to external network devices.

ⓘ The availability of the function is dependent on the country.

Generally, two types of Wi-Fi connection are available:

- **Using the multimedia system as a Wi-Fi hotspot** (→ page 446)

  The vehicle's multimedia system serves as Wi-Fi hotspot for mobile communication devices, such as smartphone or tablet PC, for example.

- **Using a mobile communication device as a Wi-Fi hotspot (tethering)** (→ page 533)

  An external Wi-Fi hotspot is accessed for the Internet connection of the vehicle's multimedia system.

Switching Wi-Fi on or off

Multimedia system:

→ ⌂ ▸▸ Settings ▸▸ System ▸▸ Internet and Bluetooth

▶ Select Wi-Fi.
The controller is to the right: Wi-Fi is switched on.

When Wi-Fi is switched on, you can connect the multimedia system with external hotspots or make it available as a hotspot for external devices.

When Wi-Fi is switched off, it is not possible to establish a hotspot connection.

ⓘ The availability of the function is dependent on the country.

Using the multimedia system as a Wi-Fi hotspot

Requirements

- The device to be connected supports at least one of the types of connection described.

  The connection types shown depend on the device to be connected. The function must be supported by the multimedia system and by the device to be connected. The type of connection must be selected on the multimedia system and on the device to be connected.

ⓘ The data volume of the vehicle or an already connected tethering device is used for the data connection.
Vehicle data volumes: depending on the vehicle equipment, you can purchase a data package directly from a mobile phone network provider via the Mercedes me Store. To be able to use the data package, you conclude a separate contract with a mobile phone network provider via the Mercedes me Store, which can be terminated at any time and for which there are no costs. This contract is a prerequisite for using the services from the previously purchased package. The availability of this option is dependent on the country.
If the data package option is not available or can be upgraded, you can purchase data volume directly from the mobile phone network provider for a fee.

ⓘ Some functions may first need to be activated on the device being connected. More detailed information can be found in the manufacturer's operating instructions.

ⓘ The use of the vehicle data tariff by external devices is not available in all countries.

Multimedia system:

→ ⌂ ▸▸ Settings ▸▸ System ▸▸ Internet and Bluetooth

▶ Select MBUX Hotspot.

▶ Select one of the following connection options.

Connecting using a QR code

Requirement: an app for scanning the QR code is installed on the device being connected.

Alternatively: the device being connected has an integrated QR code scanner (see the manufacturer's operating instructions).

▶ Scan the QR code shown.
The Wi-Fi connection is established.

Connecting using a security key

▶ Select the vehicle from the device to be connected. The vehicle is displayed with the MBUX XXXXX network name.

▶ Enter the security key which is shown in the central display on the device to be connected.

▶ Confirm the entry.

Generating a new security key

▶ Select the Generate New Security Key option in the MBUX Hotspot menu.

▶ Confirm the prompt with Yes.
A new security key is generated.

A connection will be established with the newly created security key.

ⓘ When a new security key is generated, all existing Wi-Fi connections are then disconnected. If the Wi-Fi connections are re-established, the new security key must be entered.

System language

Notes on the system language

This function allows you to determine the language for the menu displays and the navigation announcements. The selected language affects the characters available for entry. The navigation announcements are not available in all languages. If a language is not available, the navigation announcements will be in English.

Setting the language

Multimedia system:
→ ⌂ ▸▸ Settings ▸▸ System ▸▸ Language

Setting the system language

A list of the available system languages is shown.

▶ Select a language.
The system language is switched to the selected language.

Setting the distance unit

Multimedia system:
→ ⌂ ▸▸ Settings ▸▸ System ▸▸ Display

ⓘ This function is not available in all countries.

▶ Select a unit for the distance.

▶ Activate Additional Speedometer for an additional display in the driver's display.

Activating/deactivating system PIN protection

Multimedia system:
→ ⌂ ▸▸ Settings ▸▸ System ▸▸ Data Protection ▸▸ PIN Protection

Setting the system PIN

▶ Select Set PIN.

▶ Enter a four-digit system PIN.

▶ Enter the four-digit system PIN again.
If both system PINs match, then the system PIN protection is active.

Changing the system PIN

- Select Change Settings.
- Enter the current system PIN.
- Select Change PIN.
- Set a new system PIN.

Activating system PIN protection for software updates

- Select Protect Software Updates.
- Activate or deactivate the function.

Configuring suggestions

Multimedia system:

→ [⌂] ▸▸ Settings ▸▸ System ▸▸ Suggestions

- Select [⚙].
- Switch the options on or off individually.
  If an option is switched on and sufficient data has been gathered, personalized suggestions based on your user behavior will be offered to you. These are, for example, navigation destinations visited, phone numbers dialed as well as suggestions based on your music preferences.

  Navigation

  When Allow Destination Suggestions is switched on, the vehicle makes suggestions based on your visited navigation destinations.

  If Commuter Route is switched on, the navigation automatically detects that the vehicle is on a commuter route.

  Calls & Messages

  Suggestions are offered for numbers dialed and messages sent.

  Comfort

  The vehicle makes suggestions based on the use of your comfort functions, e.g. which massage program should be started at what time.

  Entertainment

  Suggestions are offered for the currently played media source. Suggestions are also made for online digital services, e.g. Spotify, TuneIn Radio and streaming services, and for categories, e.g. genre, artist and mood.

  Vehicle

  The suggestions for vehicle functions such as Parking Assist PARKTRONIC and the vehicle level settings are displayed on the zero layer.

  The zero layer is your own personalized user interface with the digital map in the foreground and the applications that you use the most. You can switch between the zero layer and the home screen with a classic menu.

  Online Voice Services

  The suggestions are made available online based on your voice input and are offered on the zero layer.

ⓘ The suggestions offered depend on the equipment.

Deleting collected suggestions

Multimedia system:

→ [⌂] ▸▸ Settings ▸▸ System ▸▸ Suggestions

- Select [↺].
- Select Yes.
  The suggestions are reset.

Software update

Information on software updates

Software updates keep your vehicle and the related systems up-to-date and prevent security flaws.

Software updates are available online for vehicle components such as control units, convenience systems, locking and safety systems, driver assistance systems, suspension and drive systems as well as for the MBUX multimedia system. Software updates are available via the communication module or a Wi-Fi connection to an external hotspot.

The navigation maps are also updated via updates from external storage media (e.g. USB flash drive).

Install available software updates regularly. Otherwise the security of your MBUX multimedia system and individual vehicle components cannot be ensured.

ⓘ Software updates can be protected with a system PIN. Further information about the system PIN (→ page 447).

Further information about software updates can be found at https://me.secure.mercedes-benz.com.

Carrying out software updates

Requirements:

For software updates via the communication module and WLAN:

- Your vehicle is linked to a Mercedes me user account (→ page 526).
- Software updates without Mercedes me user account: The Allow Software Updates option is activated in the Software Update menu.
- For software updates via the communication module: an Internet connection exists via the communication module (→ page 532).
- For software updates via Wi-Fi: a connection to an external Wi-Fi hotspot exists (→ page 533).

ⓘ Depending on the software update, this is started via the [ ] communication module, [ ] Wi-Fi or an [ ] external storage medium.

ⓘ Online software updates cannot be performed via external WLAN hotspots that are encrypted via TKIP.

ⓘ If the WLAN hotspot requires logging in via the browser, once the connection is successfully established the browser will open in order to start the update. To start the download follow the instructions in the browser.

Multimedia system:

→ [ ] ▸▸ Settings ▸▸ System ▸▸ Software Update ▸▸ [ ]

Starting a map update from an external storage medium

▶ Connect the storage medium with the vehicle via a media interface.
A message about an available map update appears on the central display.

▶ Select the message.

▶ Select Start.
The map update is started.

Starting the software update via the communication module

If the Automatic Online Update option is active, available software updates are downloaded and installed automatically. Activate the option in order to always keep your vehicle up-to-date and avoid security flaws.

- Select Automatic Online Update.
  The software update is downloaded and installed automatically.

If the option is deactivated, you will be informed of new software updates once. The updates are available for downloading for a limited period of time.

- Select an update from the list of available updates.
- Start the update.
  The software update is downloaded and installed automatically.

Starting a software update via Wi-Fi

Some software updates require an additional connection to a Wi-Fi hotspot. The connection to an external hotspot can be established when the software update is started.

- Select an update from the list of available updates.
- Start the update.
- Establish the connection to a Wi-Fi hotspot.
  The update is downloaded and installed automatically.

For software updates requiring a safe vehicle status: when the last installation step is reached, a message appears on the central display after the vehicle is switched off. Follow the step-by-step instructions on the central display to complete the installation.

There are software updates that can only be installed when the vehicle is safely parked, there are no more people in the vehicle and the vehicle is locked.

Installing software updates

Software updates are installed automatically after they are downloaded. As soon as the software update has been completed, a message appears in the central display. It may be necessary to restart the MBUX multimedia system.

Some software updates require a safe vehicle status for the installation to be completed. They can only be carried out in a safely parked vehicle with the vehicle switched off. If this is necessary, a message appears on the central display after the vehicle is switched off.

- Follow the instructions on the central display.

For some software updates, you can set a time for installation. The installation is carried out automatically at the scheduled time. You do not need to be in the vehicle during installation. Note that the planned installation is canceled as soon as the vehicle door is opened.

If an installation is available where you can set the time, a message appears on the central display after the vehicle is switched off.

- Follow the instructions on the central display.

The vehicle cannot be used while these software updates are being installed. Make sure that no persons or animals are in the path of your vehicle.

Events stored in the vehicle's control units can be overwritten.

Availability of the driver and central display

During the installation of software updates, it is not possible to use the vehicle, driver display and central display. You may receive the following display messages when an installation is running:

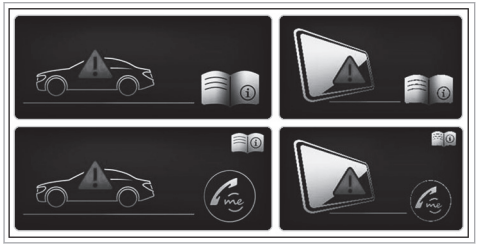

ⓘ The display message does not appear every time a software update is installed.

In rare cases, an error can occur during the installation. The multimedia system automatically attempts to restore the previous version.

If it is not possible to restore the previous version, the display message shown above appears every time the vehicle is started.

Failure of the driver display:
If the driver display fails or there is a malfunction, you may not recognize limitations in the functions of systems relevant to safety or the speed display, for example. This may impair the operating safety of the vehicle. Park the vehicle safely as soon as possible and notify a qualified specialist workshop. (→ page 809)

Further information about software updates can be found at https://me.secure.mercedes-benz.com

Failure of the central display:
If the central display fails or the display message shown above is shown continuously, several systems such as the rear view camera, Parking Assist PARKTRONIC or climate control are no longer available. Drive on carefully and consult a specialist workshop as soon as possible.

Resetting the multimedia system (reset function)

⚠ **WARNING** Risk of accident due to failure of central display functions

While the multimedia system is reset, its functions, such as the rear view camera, are not available.

▶ Only reset the multimedia system when the vehicle is stationary.

Requirements

- The vehicle is switched on.
- The vehicle is stationary.

Multimedia system:

→ ⌂ » Settings » System » Reset

When resetting the system, personal data and settings are deleted, for example:

- Connected devices
- Individual user profiles
- Biometric data

ⓘ The data used and saved in the multimedia system by the driver assistance systems is deleted.

▶ Select Reset.
A query appears asking if the system should really be reset.

▶ Select Yes.
The multimedia system is reset to the factory settings. The multimedia system is restarted after the system reset.

ⓘ Due to data protection, as well as the function of individual driving systems and driving safety systems, it is a requirement to carry out a complete system reset before selling the vehicle or transferring it to a third party, or after use as a hire car.

AMG TRACK PACE

Function of AMG TRACK PACE

ⓘ This function is an on-demand feature (→ page 77).

With AMG TRACK PACE, the driving characteristics on race tracks can be analyzed and optimized. You can drive previously saved race tracks (e.g. the Hockenheimring), or record and save new tracks. The lap times set will be stored for every track. These can be analyzed and compared with other lap times to achieve the best possible race results. Additionally, acceleration and braking operations can be measured and stored.

Note: Use AMG TRACK PACE only on closed circuits away from public roads. Adapt your driving style to your personal skill level and environmental conditions. As the driver, you are solely responsible for driving your vehicle. Park your vehicle safely before operating the application.

Setting Track Race

Multimedia system:
→ TRACK PACE ▸▸ Track Race

Recording a new track

▶ Select New Track .

▶ Select ▶ Start Record. at the desired starting point.
The track recording starts at this point.

During track recording, sectors can be set to divide up the track.

▶ Select Set Sector.

▶ Select ■ Stop Recording to end track recording or cross the start line again.

▶ Confirm the prompt with Yes.

▶ Select the weather.

ⓘ The temperature will be determined automatically.

▶ Enter a name.

▶ Press OK to confirm.
The track will be saved under the name entered.

Searching by track name

▶ Select Search .

▶ Enter the desired track name.
Tracks with the searched name are displayed.

Measuring time on a saved track

▶ Select All tracks.

▶ Select the desired track.

▶ Select [•••].

▶ Select Start Time Recording if you are already at the start line.

or

▶ Select Navigate to to navigate to the start line.

Timekeeping begins automatically when the starting line has been crossed.

ⓘ When [AR] is selected, the track display can be switched to AR. In addition, it is possible to switch to the telemetry display by selecting [ ].

▶ Select [ ] Stop timekeeping to end timekeeping.

▶ Confirm the prompt with OK.

▶ Select the weather.

▶ Select Yes to save the times set for this track.

Showing readings during Track Race

The following readings can be shown:

- Tire temperature
- Miniature map
- Sector overview
- G-force display
- Lap overview

▶ Select [ ] Start Time Recording .

▶ Select [ ].

▶ Drag the desired display from the grid to the left or right edge of the central display.
The readings will be shown during Track Race.

You can deactivate this by selecting [×] on the active display.

Displaying the analysis

▶ [ ] Select All tracks.
An overview of all the driven tracks appears.

▶ Select a track.

▶ Select a session.

The following data is displayed:

- Lap and sector times
- average and maximum permissible speed
- driver
- Vehicle
- Date
- Weather

▶ Select Add Recording to use a different session as a reference value.

▶ Select [↩] to return to the overview.

▶ Select Diagram.

▶ Set the desired parameters.
The analysis is displayed.

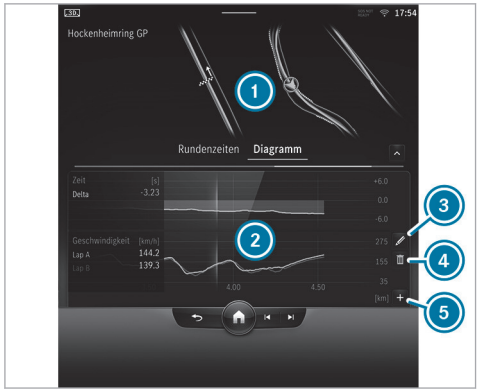

1. Lap overview
2. Parameter overview
3. Editing parameters
4. Deleting parameters
5. Adding new parameters

ⓘ The following values can be set for the parameters, for example:

- Speed
- longitudinal/lateral acceleration
- Steering angle
- engine speed
- engine oil/tire temperature

Based on the analysis, you can check and optimize driving characteristics for any position on the track.

Exporting tracks (USB)

▶ Select Tracks .
An overview of all stored tracks will appear.

▶ Select the desired track.

▶ Select options ••• for the desired track.

▶ Select Export Track to....
The selected track can be exported to a USB storage device connected to the vehicle.

Editing tracks and recordings

▶ Select Tracks .

▶ Select the desired track.

▶ Select options ••• for the desired track.

▶ Select Rename or Delete.

or

▶ Select a track.

▶ Highlight the desired recording.

▶ Select ••• Options.

▶ Select Export to... or Delete.

Setting Drag Race

Multimedia system:

→ TRACK PACE ▸▸ Drag Race

Measuring acceleration

▶ Select Drag race options.

▶ Select Acceleration.

▶ Set a starting speed or select Automatic.
Measurement will begin as soon as the specified starting speed has been reached.

▶ Set a target speed.
Measurement will stop as soon as the specified target speed has been reached.

▶ Start off and begin the measurement.
Measurement will begin when the vehicle accelerates.

You can stop measurement early by interrupting the acceleration procedure.

Quarter-mile race

- Select ⚙ Drag race options.
- Select Quarter Mile.
- Set a target distance.
  Measurement will stop as soon as the specified target distance has been reached.
- Start off and begin the measurement.
  Measurement will begin when the vehicle accelerates. Timing will run until the target distance or a maximum of one mile has been traveled.

You can stop measurement early by interrupting the acceleration procedure.

Measuring braking

- Select ⚙ Drag race options.
- Select Braking.
- Set a starting speed or select Automatic.
- Start off and begin the measurement.
- Brake to a standstill.
  Measurement is incremental, in steps of 6 mph (10 km/h) to a standstill. If the braking procedure is started e.g. at a speed of 98 mph (157 km/h), measurement will start as soon as 93 mph (150 km/h) has been reached

Storing and calling up measured values

If a measurement is completed or canceled, a prompt will appear asking whether the measurement should be saved.

- Confirm the prompt with OK to save.

Calling up saved measurements

- ☰ Select History.
- Select Acceleration, Quarter Mile or Braking.
- Select a measurement.
  The desired measurement will be displayed in detail.

or

- Delete a measurement.

Calling up the telemetry display

Multimedia system:

→ TRACK PACE ▸▸ Telemetry

The telemetry display shows current vehicle data as a digital value and as a diagram. Up to four parameters can be selected to be shown on the display.

For example:

- Engine speed
- Wheel angle
- Speed
- Steering angle

- Set the desired parameters.
- Set the time.
  The set parameters will be evaluated for the selected time on the diagram.

Configuring AMG TRACK PACE

Requirements

To connect a mobile device to the TRACK PACE app:

- the TRACK PACE app is installed on the mobile end device.
- The mobile end device is connected to the multimedia system via Wi-Fi (→ page 446).

Multimedia system:

TRACK PACE ⚙

Connecting a mobile device via the TRACK PACE app

The TRACK PACE app makes it possible to record videos and to synchronize them with stored tracks.

▶ Select TRACK PACE App.

▶ Select Authorize a New Device.

▶ Start the TRACK PACE app on the device to be connected.

▶ Select Continue and confirm the authorization prompt.
A four-digit code will be shown on the central display.

▶ Enter the code on your smartphone.
The device is authorized.

De-authorizing the mobile device

▶ Select TRACK PACE App.

▶ Select a device.

▶ Confirm the message prompt with Yes.
The device is de-authorized.

Setting the TRACK PACE display on the head-up display and driver's display

▶ Select IC and HUD Contents.

▶ Activate or deactivate the desired contents.
The content on the head-up display and the driver's display will be adapted.

ⓘ Further information about the head-up display (→ page 406).

ⓘ Further information about the driver's display (→ page 392).

Setting acoustic feedback

▶ Select Acoustic Feedback.
A scale with values from 0 to 10 is shown.

▶ Select a setting.

Displaying statistics

▶ Select TRACK PACE Statistics.
Statistics on the current user profile will be displayed.

The following data is displayed:

- Driving time
- track driven
- tracks recorded
- Track Races recorded
- laps recorded
- Drag Races recorded
- maximum design speed

Activating the ambient light

If this function is active, the vehicle interior is lit red or green depending on Delta Time.

▶ Select Ambient Light.

▶ Activate or deactivate the function.

Adjusting the dashcam

If the vehicle is equipped with a dashcam, it can be used in AMG TRACK PACE.

- Select Dashcam.
- Select Track Race or Drag Race and activate Activate Recording.
- You can set which overlay is to be used in the recorded video under Video Overlay Content.

Activating boost strategy

This function is used to increase performance on a race track and is available only in the drive program.

- Select boost strategy.
- Activate or deactivate the function.

ⓘ The function is not available for all vehicle models.

Plug-in hybrid settings

Configuring the charging settings

Multimedia system:

→ ⌂ ▸▸ Hybrid ▸▸ Charging

Setting the charging program

- Select Home, Work or Standard.

ⓘ The standard charging program is automatically activated when the vehicle is switched on or off.

Opening the socket flap

- Press Open socket flap.
  The socket flap opens and can be closed again by hand. When the socket flap is open and a vehicle plug is inserted and locked in place, charging can be stopped by pressing the End charging and unlock button, which will be available at that time.

ⓘ The availability of this function is equipment-dependent.

Unlocking the charging cable (mode 3 or 4)

When the function is active, the charging cable is unlocked when the maximum charge level is reached.

- Select Home or Work.
- Activate or deactivate Unlock Charging Cable.

Activating or deactivating location-based charging

- Select Charging Program, Home or Charging Program, Work.
- Activate or deactivate Select Based on Location.

When the function is activated, the vehicle's current position is saved as one of the selected options. When the address is reached again, a brief query appears as to whether the respective charging program should be selected.

Setting the departure time

- Select Next Departure Time.

The following charging times can be selected:

- individual charging times
- a Week Profile

Setting an individual departure time

- Select Add New Time and set the desired departure time.

or

- Select and adapt an existing departure time.

Setting repeat days

- Select Add New Time and set the desired departure time.

- Mark the relevant weekdays for which the departure time will apply and confirm with [OK].

or

- Select [✎] and edit existing repeat days.

Setting the maximum charge level

- Select Maximum State of Charge.
- Set the desired percentage.
  The high-voltage battery is charged up to the set percentage as a maximum.

ⓘ The percentage can be set in increments of 10 %.

ⓘ As soon as the full charge level is reached, a notification is shown in the central display that the charging process is completed and the journey may be continued. The maximum charge level can be saved in the Home and Work charging programs. In the Standard charging program, the setting is automatically reset to a charge level of 100 % after the vehicle is switched on or off.

Overview of the energy flow display in the multimedia system

The active components of the hybrid system are highlighted on the energy flow display. The energy flow between the individual components is shown in color.

The components displayed are:

- State of charge of the high-voltage battery
- Combustion engine
- Energy flow
- High-voltage battery

The energy flow is shown in different colors depending on the operating status:

- **White:** constant energy flow
- **Red:** high energy flow (boost effect)
- **Green:** low-emission energy flow in the case of recuperation, electric mode and charging the high-voltage battery

Calling up the energy flow display

Multimedia system:

→ [⌂] ▸▸ Info

- Select Energy Flow.
  The energy flow in the vehicle will be displayed.

Information on the status of the hybrid system and the current state of charge of the high-voltage battery will be displayed in addition to the energy flow.

Off-road menu

Overview of the Offroad menu in the MBUX multimedia system

You can watch an animation on this topic via the following link:

The Offroad menu provides an overview of the most important, relevant data for off-road driving, as well as functions to assist driving off-road and the possibility to record tracks for subsequent re-use or for sharing with other drivers.

Cockpit
This tab provides an overview of the most important data. Content is displayed in different tiles that can be changed using directional arrows or swipes. In addition, this menu contains buttons for quick-access to certain vehicle functions relevant to off-road operation.

Displayed data are, for example:

- Artificial horizon
- Compass
- Altitude
- Steering angle of the front and rear wheels
- Torque and power
- Tire pressure and temperature
- Transparent hood

Further information on the Cockpit tab (→ page 459).

Setting the off-road menu in the multimedia system

Multimedia system:

→ [⌂] ▸▸ Offroad ▸▸ Cockpit

Setting displays in the central display

▶ Press [◁], [▷] or on the display itself to jump to the next display.

Quick-access: activating or deactivating Parking Assist PARKTRONIC

▶ Press [P/] to switch the function on or off.

ⓘ Further information on Parking Assist PARKTRONIC (→ page 366).

Quick-access: activating or deactivating ESP® (Electronic Stability Program)

▶ Press [OFF] to switch the function on or off.

ⓘ Further information on ESP (→ page 306).

Quick-access: activating or deactivating manual shifting

▶ Press [M] to switch the function on or off.

ⓘ Additional information on manual gearshifting (→ page 266).

Quick-access: activating or deactivating DSR (Downhill Speed Regulation)

▶ Press [DSR] to switch the function on or off.

ⓘ Further information on DSR (→ page 327).

Fit & Healthy

Setting ENERGIZING seat kinetics

Requirements

ⓘ These functions are available only for fully electric seats with a memory function.

Multimedia system:

→ [⌂] ▸▸ Comfort ▸▸ Seat

▶ Select Seat Kinetics.

ENERGIZING seat kinetics can support back health by changing the seat position during a journey. This involves repeatedly stressing and relieving the muscles and joints by means of minor movements of the cushion and backrest.

Starting seat kinetics

▶ Select [▶] for the desired seat.
The program will run for the set duration.

Configuring seat kinetics

▶ Select [⚙] for the desired seat.

▶ Select Backrest, Backrest and Seat Surface or Seat Surface.

▶ Select the desired duration for the selected seat.

Vehicles with a multicontour seat:

In addition to the seat backrest and seat cushion, the lumbar support can be activated for the function.

▶ Activate or deactivate Including Lumbar.

Navigation and traffic

Switching navigation on

Multimedia system:

→ [⌂]

▶ Alternatively, press the [⌂] button on the steering wheel on the right (→ page 428). The zero layer with the digital map is displayed.

Calling up the navigation module in the expanded view

Multimedia system:

→ [⌂] ▸▸ Navigation

ⓘ Navigation means: navigation module ① is selected in the zero layer (→ page 461).

The navigation module is called up in the expanded view and shows the route overview.

▶ Select one of the functions (→ page 473).

The following functions are available:

- Switch the traffic information display on or off.
- Select Previous Destinations.
- Search for Gas Stations.
- Search for Parking Spaces.
- Select Alternative Routes.
- Enter a destination with [🔍].
- Make settings for View, Messages & Acoustic Signals and Route with [⚙].

Navigation overview

Digital map

1. Navigation module (reduced view)
   Route guidance active:
   The navigation module shows the information relevant to the route in the zoomed-out view, e.g. the destination or a traffic delay
   [⊗] Ends the current route guidance
   Tapping opens the navigation module in the expanded view with the Route (→ page 473)
2. Destination entry
3. Searches for a parking space
4. Map orientation [⊘] and set map type
5. Current vehicle position (vehicle symbol or arrow)
6. Display area with entertainment sources, telephone, active applications and suggestions
7. Navigation window shows the next driving maneuver (zoomed out view) or the route monitor (zoomed in view)
   Route guidance active: route monitor shows, e.g. route sections, upcoming driving maneuvers with lane recommendations, destination, traffic delays, toll stations, 3D images at freeway exits, online content
   [🔊] Switches off navigation announcements
   [🔇] Switches on navigation announcements

Pressing 4 several times changes the map orientation in this order:

- 2D and to the north
- 2D and direction of travel
- 3D and direction of travel
- Map with complete route

ⓘ If the map is moved, the map switches between 3D direction of travel and 2D north orientation.

The following map types 4 are available:

- Daytime display
- Night-time display
- Satellite map

ⓘ If you notice a problem with the digital map you can report this under https://mapfeedback.here.com/#/report.

Destination entry

Notes on destination entry

WARNING Risk of distraction from operating integrated communication equipment while the vehicle is in motion

If you operate communication equipment integrated in the vehicle when driving, you could be distracted from the traffic situation. This could also cause you to lose control of the vehicle.

- ▶ Only operate this equipment when the traffic situation permits.
- ▶ If you cannot be sure of this, stop the vehicle whilst paying attention to road and traffic conditions and operate the equipment with the vehicle stationary.

You must observe the legal requirements for the country in which you are currently driving when operating the multimedia system.

Entering a POI or address

Requirements:

- For the online search:
  - There is an Internet connection.
  - Mercedes me connect is available.
  - You have set up a user account in the Mercedes me Portal.
  - The vehicle is connected with the user account and you have accepted the terms of use.
  - Further information can be found at: https://www.mercedes.me
  - The service is available.
  - The service has been activated at an authorized Mercedes-Benz Center.

ⓘ If Online Search is not available, the search is performed using the data of the digital map.

Multimedia system:

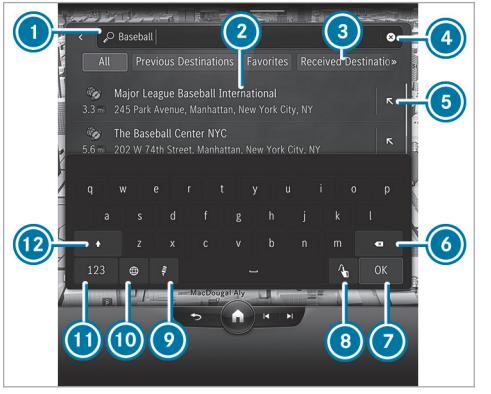

Example: entering a POI or address

1. Input line with current entry
2. Search result
3. Selects destination search, displays further destination searches with double arrow
4. Deletes an entry

⑤ Adopts the search result in the input line and continues the search
⑥ Deletes the last character entered
⑦ Hides the keypad
⑧ Switches to handwriting recognition (→ page 441)
⑨ Starts the MBUX voice assistant (→ page 412)
⑩ Sets the written language
⑪ Switches to digits and special characters
⑫ Switches to upper-case or lower-case letters

▶ Enter a destination. The entries can be made in any order.
The search results are displayed in a list.

ⓘ Online search results for POIs may contain additional information, for example opening times and ratings. The information is provided by an online map service.
This online function is not available in all countries.

The following entries can be made, for example in ①:

- City, street, house number or street, city
- Zip code
- POI name or POI category, e.g. Restaurants
- City, POI name
- Contact name
- Geo-coordinates (→ page 465)
- Three-word addresses from what3words (→ page 466)

  Entering three-word addresses is possible in the online search .

▶ Hide the keyboard with OK.

▶ Select the destination in the list.
The following menu shows the selected destination with the address information and a corresponding map section.

The menu enables the route to be calculated.

Selecting a destination suggestion

Requirements:

- The Allow Destination Suggestions option is switched on (→ page 448).
- The multimedia system has gathered sufficient data in order to show destination suggestions.

Multimedia system:

▶ Select Suggestions.

or

▶ Select a destination suggestion directly on the Zero Layer (→ page 422).
The route is calculated in the following menu.

ⓘ If Suggestions has been selected, a menu is available via •••. The menu offers settings for the suggestions and memory functions.

ⓘ Managing destination suggestions (→ page 484).

Selecting previous destinations

Multimedia system:

- Select Previous Destinations.
- Select the destination.
  The following menu enables the route to be calculated.

ⓘ You can save a destination as a favorite (→ page 483).

Selecting a POI

Requirements:

- **For use of personal POIs:** a USB device is connected with the multimedia system.
- Personal POIs with the GPS Exchange format (.gpx) have been saved in the PersonalPOI folder on the USB device.

Multimedia system:

- Select POIs.
- Select one of the displayed quick access categories, e.g. [P] .
- Select the POI.
  The following menu enables the route to be calculated.

or

- Select All Categories or Personal POIs (see requirements).
- Select the category.
- Select the POI.
  The following menu enables the route to be calculated.

Setting a search filter after selecting a POI category

The preset search position depends on the status of the route guidance:

- If route guidance is not active, In the Vicinity is searched.
- If route guidance is active, Along the Route is searched.

- When the search results are displayed, select Filter.
- Select the search position, e.g. In the Vicinity.
- If a route with intermediate destinations already exists and Near Destination has been selected in the search filters, the destination is selected for the search.

or

- Select the desired traveling time to the point of interest.
- Select Search Results.

Configuring categories for quick access

The categories are displayed:

- As symbols after calling up the destination entry via [🔍]
- As a list after calling up All Categories

These categories are shown as symbols after the destination entry is called up using [🔍].

- In the POI menu, select All Categories.
- Select [☆] or [★] for a category.
  Tapping on [☆] adds the category.
  Tapping on [★] removes the category.

▶ Use [↩] to change back.
The new categories are shown after the destination entry is called up the next time.

ⓘ If all available quick-access positions are full, select the category to be replaced.

Changing the order of quick-access categories

▶ In the POI menu, press and hold a category for quick access.

▶ Tap on the arrows next to the selected category.
The arrows for the other categories are grayed out.

▶ Drag the category up or down.

▶ Select [✓].

Deleting quick-access categories

▶ In the POI menu, press and hold a category for quick access.

▶ Select [★] for the chosen category.

▶ Select Delete.

▶ Select [✓].

Changing categories for personal POIs

▶ Select Personal POIs.

▶ Press on a category as long as is necessary until a menu appears.

▶ Select Change name and enter a name.

▶ Select Change Icon and select a symbol.

▶ Select Delete and confirm the prompt with Yes.

Selecting a contact for destination entry

Requirements:

- A mobile phone is connected to the multimedia system (→ page 505).
- The contacts from the mobile phone have been downloaded .
- The contact has a navigable address.
- The address data can be located on the digital map.

Multimedia system:

▶ Enter a contact in the entry line.

▶ Select the address.
The following menu enables the route to be calculated.

ⓘ Alternatively, after calling up the destination entry, you can enter the name of a contact in the search field.

Entering geo-coordinates

Multimedia system:

▶ Enter the geo-coordinates as latitude and longitude.

Examples of input formats:

- 47°58'11"N 7°57'25"E (degrees, minutes and seconds)
- 47.969722 7.956944 (decimal degrees)

▶ Confirm the entry.
The following menu enables the route to be calculated.

Entering the destination as a three-word address

Requirements:

- An active Internet connection is indicated in the status line on the central display with the symbol.
- The online search is active.

Multimedia system:

▶ Enter the destination as a three-word address from what3words. The entry can be made with spaces between the words instead of dots. The search results are displayed.

▶ Select the destination in the list. The following menu enables the route to be calculated.

The Empire State Building has this language dependent three-word address:

- English: parade.help.bleat
- French: commun.verbe.bisquer
- Spanish: suertes.diga.pesca

ⓘ Searching for a destination using three-word addresses is not possible in all countries and in all languages.

Alternatively, use the following entry options:

- Entry in the global search (→ page 438)
- Voice navigation (→ page 412)

  Example: during a telephone call you are given a 3-word address. After activating the MBUX voice assistant, say one of the following two voice commands:

  - Navigate to parade help bleat
  - Navigate to parade Point help Point bleat

Three-word addresses from what3words are an alternative addressing system for multilingual georeferencing of global locations with a resolution of three meters. Using this grid, locations on the Earth's surface are included which do not have a building address such as a street and house number, for example.

ⓘ Three-word addresses are unique, easy to remember and suffice for most routine applications.

You can convert addresses to three-word addresses and back again:

- At the website https://what3words.com
- In the what3words apps

Selecting a destination on the map

Multimedia system:

▶ If necessary, move the map (→ page 489).

▶ Press and hold on the map. Available destinations are displayed.

or

- Briefly press on a POI symbol.
  The POI is selected. If there are several POIs at this map position, a list appears.
- Select the destination in the Selected Objects list.
  The following menu enables the route to be calculated.

Selecting a destination from favorites

Requirements

- Destinations are saved as favorites.

Multimedia system:

- If required, a previous destination or a suggested destination can be stored as a favorite (→ page 483).
- Select Favorites.
- Select a favorite.
  The following menu enables the route to be calculated.

Addresses for home and work are already set

- Select Home or Work.
  The route is calculated in the following menu.

Addresses for home and work are not yet set

- Select Home or Work.
  The prompt No "Home" Address Available Set Address Now? appears, for example.
- Select Yes.
- Search for or select the address.
- Select Save.

Deleting favorites

- Select ••• for a favorite.
- Select Delete.

or

- Select Delete All.
- Confirm the prompt.
  When all the favorites have been deleted, Add Favorite is available, for example.

Selecting received destinations

Requirements:

- There is an Internet connection for receiving external destinations.
- A destination has been sent to the vehicle.
- Destinations have been shared from another seat in the vehicle.

Multimedia system:

The vehicle can receive destinations from services or apps. You will be informed when a destination is received.

- Select Received Destinations.
- Select a destination.
  The route is calculated in the following menu.

ⓘ You can save a received destination in the favorites (→ page 483).

Deleting received addresses

- Delete a destination with 🗑.

or

- Select Delete All.

Route

Calculating a route

Detailed display with a route (example)

1. Calls up alternative routes
2. Adds the chosen destination to the existing destination as the next intermediate and recalculates the route
3. Calculates a new route to the chosen destination
4. Selects a point of interest in the vicinity of the destination
5. Address of the intermediate destination

After selection of 2 or 3, the route is recalculated.

- Select one of the options.

Calling up alternative routes

- Select Routes.
- Select an alternative route.

Starting route guidance (there is no route yet)

- Select Let's Go!.

Calling up the detailed display with destination address

- Pull the bar between 2 and 3 upwards.
  Depending on the destination selection and availability, online content, for example ratings and weather information, is shown.
  If the destination is in a different time zone, a message is displayed.
- **To share a destination:** select Share.
  This option allows you to scan the displayed QR code.
- **To save a destination as a favorite:** select Favorite and then an option.
- **To call up an Internet address:** if a web address is available, select www.
- **To call the destination:** if a telephone number is available, select Call.

Searching for POIs in the vicinity of the destination shown

- Select In The Vicinity.
- Search using categories, enter a search entry or search for a personal POI (→ page 464).

Adding an intermediate destination to the existing route or starting a new route guidance

- Select Add.
  The selected destination address is set as the next intermediate destination. Route guidance begins.

▶ **There are already four intermediate destinations:** confirm the prompt with Yes and select an intermediate destinations in the route overview (→ page 473), that should be overwritten with the new intermediate destination.

or

▶ Select [🏁] Replace.
The selected destination address is set as a new destination. Route guidance begins.

ⓘ If you call up the menu during route guidance, more options are available:

- To change the order of destinations, select Move (→ page 474).
- To delete the destination, select Delete (→ page 474).
- To cancel route guidance, select Cancel Route Guidance.

Paying for the charging process on a route with Mercedes me Charge (plug-in hybrid)

Requirements

- The Mercedes me Charge service is available and subscribed to in the Mercedes me Portal.
- The services "Navigation with Electric Intelligence", "Display of charging stations" and "Mercedes me Charge" are activated.
- **To select a charging station:** the Plan Charging Stops option is switched on in the multimedia system.
- **For authentication at the charging station:** after activation in the Mercedes me Portal, you have concluded a charging contract with your payment details with the respective contractual partners.
- **For authentication using the app:** the Mercedes me App is installed on the external device, e.g. tablet or smartphone.
- For charging stations without remote access, you have purchased an RFID card for the contracting partner.

ⓘ This function is not available in all countries.

Multimedia system:

→ [⌂] » Navigation

ⓘ Observe the following information:

- Read the notes on charging the high-voltage battery (→ page 273).
- Read the notes on charging the high-voltage battery at the charging station (→ page 278) and (→ page 278).
- **Before selection of a charging station:** the data for the charging stations is based on the online content available from the respective third-party provider.
- Observe the local information and conditions.

▶ **To select a charging station:** tap on a symbol on the map for a charging station or on a group of symbols for several charging stations.

▶ If a group of symbols is selected, select the charging station from the list.

The following information is displayed (if available):

- Name of the charging station operator

- Address of the charging station
- Plug with availability and information about charging power
- Opening times
- Name of the charging station
- Travel time and distance of the charging station from the vehicle
- Authentication method
- Contact information of the charging station operator
- General costs and charging costs
- Estimated charging costs and your available energy volumes, if available
- Display of available reviews and the ability to review with up to five stars
- Availability prognosis
- Information on green charging

  Mercedes-Benz provides high-quality certificates of origin to ensure that an equivalent amount of electricity from renewable sources is fed into the grid for charging processes carried out via Mercedes me Charge.

▶ Calculate the route (→ page 468).

ⓘ If the function is available, the start/stop of the charging process can be selected.

▶ **To access a charging station remotely (start/stop):** select a charging station in the map menu of the app or the MBUX multimedia system.

▶ Show the details using the widget (program symbol).

▶ Select Start charging process.
The charging process starts. In addition, the payment agreement saved with the third-party provider is authorised.

ⓘ Remote access is not available for some charging stations. In this case use your RFID card to activate the charging process (if available).

▶ If required, enter the PIN for personalisation.

▶ Confirm the action.

▶ If required, select the connector ID from the list shown.
The selected charging cable connector is unlocked.

▶ Start the charging process.
The start of the charging process is shown.

▶ Select the Stop charging process display button in the app.
The charging process is ended.

Payment is processed automatically.

If data for third-party providers is available, you will receive this information:

- Overview of the charging process
- Estimated cost

ⓘ There may be differences between the costs listed and the costs billed.

Overview of the Range on Map service (plug-in hybrid)

Requirements:

- The "Range on Map" service, which is subject to a charge, is available and activated in the Mercedes me Portal.

- The Range option is switched on (→ page 494).

The fuel range (purple) and the electric range (white) are shown on the map as a closed line around the current vehicle position.

In the following cases, there is no display on the map:

- The overall range is very large.
- If the fuel level is less than 10 %.
- If the electric range of the vehicle is less than 4 mi (6 km).

Selecting a route type

Multimedia system:

→ [⌂] ▸▸ Navigation ▸▸ [⚙] ▸▸ Route

Using trailer mode and online routes

The route is calculated as a fast route with a short journey time.

Trailer mode is available if a trailer has been coupled with the vehicle. If available, you can select online routes.

ⓘ Trailer mode and online routes are not available in all countries and for all vehicles.

▶ Select Trailer Mode.
A prompt is shown in the multimedia system.

▶ Confirm the prompt.
The arrival time at the destination takes into account a reduced driving speed with trailer.

▶ **To use online routes:** switch on the option.

Taking traffic information for the route into account

▶ Select Reroute Based on Traffic [>].

▶ Select one of the options.

Explanation of the options:

- Automatic

  Traffic reports via Live Traffic Information are taken into account (→ page 484).

  Live Traffic Information is not available in all countries.

- On Request

  A prompt appears when a new route is detected with a shorter journey time based on traffic reports. You can continue to use the current route or use the dynamic route instead (→ page 471).

- Off

  No traffic reports are taken into account for the route.

Calculating alternative routes

Multimedia system:

→ [⌂] ▸▸ Navigation ▸▸ [⚙] ▸▸ View

▶ Activate Route Overview after Start.
Alternative routes are calculated for every route.

Accepting a detour recommendation after a prompt

Requirements:

- On Request is switched on (→ page 471) in the Reroute Based on Traffic menu.
- Route guidance is active.
- There are traffic reports for the current route.

If a new route with a shorter driving time is determined, the current and new routes will be shown.

If another application is active, a notification is hidden.

- Confirm the notification.
- **To accept the new route:** select Accept.
- **To maintain the current route:** select Keep to Current Route.

Selecting route options

Multimedia system:

→ [⌂] ▸▸ Navigation ▸▸ [⚙] ▸▸ Route ▸▸ Avoid Options

Avoiding or using route sections, e.g. highways or ferries

- Activate or deactivate the avoid option.
  Avoid: the option is activated. The route avoids highways, for example.

  Use: the option is deactivated. The route takes highways into consideration, for example.

ⓘ The selected route options cannot always be taken into account. Therefore, a route may include a ferry, for instance, even though the Avoid Ferries avoid option is enabled. A message then appears and you will hear a corresponding message.

Avoiding or using toll roads

The use of toll roads requires a usage fee (toll).

- Select Toll Roads [>].
- Activate or deactivate Avoid All.
  If the option is activated, the route avoids toll roads.

  If the option is deactivated, the route takes toll roads into account.

or

- Select an option for Cash or Card Payment or Electronic Billing.
  Avoid: the route avoids toll roads with the selected method of payment.

  Use: the route takes into account roads that require a toll corresponding with the payment type selected.

Using carpool lanes

When using carpool lanes, observe the applicable legal requirements as well as any conditions pertaining to when and where such lanes may be used. Carpool lanes are only available under certain conditions.

Carpool lanes are not available in all countries.

- Select Carpool Lanes [>].
- Select one of the options.

The following options are available:

- Avoid

  If this option is selected, then no carpool lanes will be used for the route.
- 2 People
- At Least 3 People
- On Request

  When this option is selected and a carpool lane is available, a prompt appears. You can continue to use the current route or select a route with the carpool lane.

Avoiding areas

- Select Avoid Areas [>] (→ page 491).

Selecting notifications for the route

Requirements

- **For an audible indication when approaching a personal POI:** the USB device contains personal POIs.
- The USB device is connected with the multimedia system.
- The category in which the personal POI belongs is activated.

Multimedia system:

→ [⌂] ▸▸ Navigation ▸▸ [⚙] ▸▸ Messages & Acoustic Signals

Switching navigation announcements on or off

▶ Activate Reduced Messages.
If a driving instruction is available for a simple change in direction, you hear a brief announcement, e.g. "turn right in 600 ft (200 m)". The number of driving instructions along the route is minimized.

▶ Activate Detailed Messages.
If a driving instruction is available and there is a complex driving situation, you hear supplementary information, e.g. "In 600 ft (200 m) turn right and continue to follow the major road". Additional driving instructions are issued for the route, for example on turning major roads.

▶ Activate Announce Street Names.
The name of the street into which the vehicle should turn is announced.

ⓘ This option is not available in all countries and languages.

Switching traffic announcements on or off

▶ Activate or deactivate Announce Traffic Warnings.
If available, traffic warnings are announced, e.g. before the end of traffic jams that pose a risk.

Audible indication when approaching a personal POI

▶ Select Personal POIs.

▶ Activate a category.
When approaching a personal POI in the selected category an audible indication will be issued.

Displaying a route overview

Requirements:

- A destination is entered.

Multimedia system:

→ [⌂] ▸▸ Navigation

Example: route guidance is active

① Destination

② Searches for a gas station
③ Switches traffic information display on or off

When route guidance is active, the destination and entered intermediate destinations are shown.

Depending on the route, traffic situation and available data, further information is displayed:

- Name, destination address
- Symbols for intermediate destination and destination
- Phone number (if available)
- Web address (if available)
- Traffic information

The route can include up to four intermediate destinations.

Planning routes

Multimedia system:

→ [⌂] ▸▸ Navigation ▸▸ [🔍]

▶ Enter the intermediate destination (→ page 34).
After entering the destination and new calculation of the route, the route overview is shown again. The route contains a new intermediate destination.

ⓘ If there are already four intermediate destinations, delete an intermediate destination (→ page 474).

Editing a route with intermediate destinations

Requirements:

- The destination and at least one intermediate destination have been entered.

Multimedia system:

→ [⌂] ▸▸ Navigation

Changing the order of the destinations

▶ In the route overview, press and hold on a destination.

▶ Move the destination with [◀] or [▶].

▶ Tap on [✓].
The editing mode is ended.

Deleting a destination

▶ In the route overview, press and hold on a destination.

▶ Tap on [🗑].
The editing mode is ended.

Displaying the route list

Multimedia system:

→ [⌂]

▶ Tap on the navigation window ⑦ (→ page 461).

Example: route list

1. Upcoming maneuver with turning arrow, distance to maneuver, street number, street name

   Switches off navigation announcements

   Switches on navigation announcements

   Including the following route sections on the route to the destination
2. Current vehicle position

The route sections are displayed in the navigation window. The route list is updated during the journey.

ⓘ Freeway information shows the available service facilities. After selecting symbols, e.g. for car parks, service areas or freeway exits, the POI is adopted as an intermediate destination or destination.

▶ Swipe up or down.

▶ Select a route section.
The map section is displayed.

▶ **To return to vehicle position:** select Current Position.

Selecting an alternative route

Requirements:

- A route has already been created.
- The Route Overview after Start option is switched on (→ page 471).

Multimedia system:

→ ⌂ ▸▸ Navigation
▸▸ Alternative Routes

Example: alternative routes

1. Original route is highlighted
2. Alternative routes with indication of the difference in driving time

ⓘ In ② a faster route may also be shown that is considerably longer.

The following route information is displayed:

- Driving time
- Time of arrival
- Distance to the destination
- Avoid options based on the set route options
- Driving time saved or lost compared with the original route

▶ When the alternative routes have been calculated, display the route in the navigation window by swiping to the right or left.

Changing route type

▶ Select Filter.

▶ Switching the route type on or off.

Avoiding or using route options

▶ Select Filter.

▶ Switch the route options on or off (→ page 472).

▶ Confirm the settings with Done.

▶ **To start route guidance to the alternative route:** select Start.

▶ **To select an alternative route on the map:** touch any point on the alternative route. The alternative route is highlighted.

Activating a commuter route

Requirements:

- You have created a profile (→ page 431).
- The Allow Destination Suggestions option is switched on (→ page 432).
- The Commuter Route option is switched on .
- The multimedia system has gathered sufficient data in order to show destination suggestions.
- Routes have been learned for these destination suggestions.
- Route guidance is not active.

ⓘ This commuter route is not available in all countries.

Multimedia system:

↳ [⌂] ▸▸ Navigation ▸▸ [⚙] ▸▸ Route

▶ Activate Commuter Route.
The navigation system automatically detects that the vehicle is on a commuter route.

For the daily commuter route, traffic incidents on the route are also reported when driving without active route guidance.

▶ **To select commuter route:** select Start.
Route guidance begins without spoken driving instructions.

ⓘ A commuter route is suggested even with delays on the route.

▶ **To delete a commuter route:** select [×].

Adjusting the route on the map

Requirements:

- A route has already been created.

You can change the course of the original route on the map. A new intermediate destination is set in the process.

ⓘ If the maximum number of intermediate destinations is reached, the function is not supported. Press the OK button to confirm the message.

▶ Press and hold on the route lightly.
A symbol appears. The route can be changed.

▶ Drag and hold the route with your finger to a desired map position.
The new route is displayed. The route is recalculated.

When the route is calculated, the journey time and distance are compared with the original route.

When the finger is pulled away from the display, the intermediate destination is shown on the map.

▶ Accept the route with Confirm or reject it with Cancel and return to the original route.

Switching the automatic gas station search on or off

Multimedia system:

⮕ [⌂] ▸▸ Settings ▸▸ Vehicle

▶ Select Driving.

▶ Activate or deactivate Automatic Gas Station Search.
If Automatic Gas Station Search is switched on, a notification appears in which the search for gas stations is started.

Starting an automatic gas station search

Requirements:

- The automatic gas station search is activated (→ page 477).

Driving situation

The fuel level in the fuel tank reaches the reserve fuel level.

The following notification is shown on the central display: Fuel Reserve Tap here to search for gas stations..

▶ Confirm the notification.
The automatic gas station search begins. The available gas stations along the route or in the vicinity of the vehicle's current position are displayed.

▶ Select a gas station.

▶ Calculate the route with the gas station as an [⛽] intermediate destination or as a [⚑] destination (→ page 468).

▶ **If there are already four intermediate destinations:** select Yes in the prompt.
The selected gas station is entered in the route overview at position 1. Intermediate destination 4 is deleted. Route guidance begins.

Starting the automatic service station search

Requirements:

- ATTENTION ASSIST is activated (→ page 316).
- You are driving on a freeway.
- There are service stations along the route section ahead.

Driving situation
The following notification is shown on the central display ATTENTION ASSIST Tap here to search for rest areas..

- ▶ Confirm the notification.
  The service station search starts. The available service stations along the route or in the vicinity of the vehicle's current position are displayed.
- ▶ Select a service station.
- ▶ Calculate the route with the service station as an intermediate destination or as a destination (→ page 468).
- ▶ **If there are already four intermediate destinations:** select Yes in the prompt.
  The selected service station is entered in the route overview at position 1. Intermediate destination 4 is deleted. Route guidance begins.

Starting and editing a stored route

Requirements:
- A USB device with stored routes is connected with the multimedia system (→ page 542).
- The route is stored in the "Routes" folder with the GPS Exchange format (.gpx).

Multimedia system:

- ▶ Press the double arrow in the destination input line until Saved Routes is displayed.
- ▶ Select Saved Routes.

Starting a saved route
- ▶ Select a route.
- ▶ Select Start Route Guid. from Start or Start: from Current Position.
  Route guidance begins.

Renaming a route
- ▶ Press on a route until a menu is shown.
- ▶ Select Rename.
- ▶ Enter the name.
- ▶ Select OK.

Recording and storing a route

Requirements:
- A USB device is connected with the multimedia system (→ page 542).

Multimedia system:

- ▶ Press the double arrow in the destination input line until Saved Routes is displayed.
- ▶ Select Saved Routes.

Starting recording
- ▶ Select Start Recording.
  A white rectangle is displayed.
  The route is stored on the USB device.

Stopping recording
- ▶ Press the white rectangle.
- ▶ Select End Recording.

Route guidance

Notes on route guidance

⚠ **WARNING** Risk of distraction from operating integrated communication equipment while the vehicle is in motion

If you operate communication equipment integrated in the vehicle when driving, you could be distracted from the traffic situation. This could also cause you to lose control of the vehicle.

- ▶ Only operate this equipment when the traffic situation permits.
- ▶ If you cannot be sure of this, stop the vehicle whilst paying attention to road and traffic conditions and operate the equipment with the vehicle stationary.

You must observe the legal requirements for the country in which you are currently driving when operating the multimedia system.
Route guidance begins once a route has been calculated. The road and traffic rules and regulations always have priority over multimedia system driving instructions. Driving instructions are, for example navigation announcements, changes in direction and lane recommendations.

Changes in direction and lane recommendations are shown in the navigation window.

The following displays and functions are also available in the navigation window, for example:

- Route list
- Destination information
- Traffic information, e.g. length of traffic jam, delay
- Freeway facilities
- Car park search

If you do not follow the driving instructions or if you leave the calculated route, a new route is calculated automatically.

If, for example, the route is diverted or the direction of a one-way road has been reversed, driving instructions may deviate from the actual traffic situation.

Alternatives may be offered during route guidance, e.g. before passing a freeway exit road. The additional driving time for the journey along the freeway exit is shown.

For this reason, you must always observe road and traffic rules and regulations during your journey as well as the prevailing traffic conditions.

The route can differ from the ideal route, for example in the event of roadworks or incomplete digital map data.

Notes on satellite reception
The correct function of the navigation system depends amongst other things on reception of the satellite system used. In certain situations satellite reception can be impaired, malfunction or even not be possible, e.g. in tunnels or in parking garages.

Changing direction overview

Changes of direction are shown in the following displays:

- Detailed image of the intersection

  The display appears when you drive into an intersection.
- 3D image

The display appears when driving on intersection-free, multi-lane roads, for example at freeway exits and freeway interchanges.

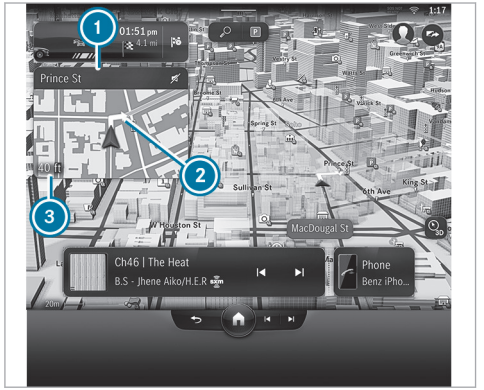

Example: detailed image of the crossing with upcoming changes of direction

1. Name of the street to turn into
2. Change of direction arrow (also on the map)
3. Current distance to the change of direction

Example: 3D image of the upcoming change of direction

1. Maneuver point
2. Change of direction arrow (also on the map)

   Larger map scales show change of direction points instead of change of direction arrows.
3. Current distance to the change of direction
4. Current vehicle position

There are three phases when changing direction:

- Preparation phase

  If there is enough time between the changes of direction, the multimedia system prepares you for the upcoming change of direction. A navigation announcement is issued, e.g. "Prepare to turn right".

  The navigation window shows: the direction information or the name of the road which is to be turned into as well as the distance to the change of direction.
- Announcement phase

  The multimedia system announces the upcoming change of direction, e.g. by announcing "Turn right in 900 ft (300 m)".

  When the Auto Zoom map orientation is switched off (→ page 494), a detailed representation of the intersection or a 3D image of the upcoming change in direction appears in the navigation window.
- Change-of-direction phase

  The multimedia system announces the imminent change of direction, e.g. by announcing "Now turn right".

  Example of 3D image: when the distance to maneuver point 1 is shown with 0 ft (0 m) and the symbol for current vehicle position 4

has reached maneuver point ① the change in direction is carried out.

ⓘ Changes in direction are also displayed on the driver's display and head-up display.

Lane recommendations overview

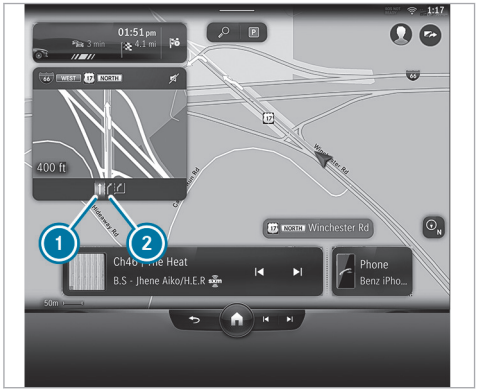

Example: lane recommendations

① Recommended lane (white arrow, blue background)

② Lane not recommended (gray arrow)

Not in the image: A possible lane is indicated with a white arrow.

This display appears for multi-lane roads.

If the digital map contains the relevant data, lane recommendations are displayed in the navigation window.

Explanation of the displayed lanes:

- Recommended lane

  In this lane, you will be able to complete both the next change of direction and the one after that.

- Possible lane

  In this lane, you will only be able to complete the next change of direction.

- Non-recommended lane

  In this lane, you will not be able to complete the next change of direction without changing lane.

During the change of direction, new lanes may be added. Bus lanes are also shown.

ⓘ Lane recommendations are also displayed on the driver's display and head-up display.

Using freeway information

When driving on the freeway, upcoming freeway facilities and available service facilities are shown in the route list. These include car parks, service stations or freeway exits with service POIs, for example.

The entries are sorted according to increasing distance from the current vehicle position.

- Select an entry.
- If several service facilities are available, select a service facility from the list.
  The destination address and the map position are shown.
- Calculate the route (→ page 468).

or

- Search for a POI in the vicinity.

or

- Use other functions, e.g. store the destination address of the service facility.

Destination reached

Once the destination is reached, you will see the [🏁] checkered flag. Route guidance will now be complete. The navigation menu is shown.

When an intermediate destination has been reached, you will see the intermediate destination flag with the number of your [📍] intermediate destination. Route guidance is continued.

Switching navigation announcements on or off

Switching off

- Press the [🔇] button on the steering wheel or on the MBUX multimedia system during a navigation announcement (→ page 439).
  The Spoken voice guidance has been deactivated. message appears.

or

- Show the navigation menu (→ page 460).
- Select [🔊].
  The symbol changes to [🔇].

Switching on

- In the navigation window, select [🔇] for an upcoming driving maneuver.
  The current navigation announcement is played.
  The symbol changes to [🔊].

Switching navigation announcements on or off during a phone call

- Press the [⌂] button on the steering wheel on the right.

or

- Tap [⌂] on the central display.
- Select Settings.
- Select System.
- Select Audio.
- Select Navi. And Traffic Announcements.
- Activate or deactivate Driving Recommendations During Call.
- **To leave the menu:** select [↩].

Adjusting the volume of navigation announcements

Multimedia system:

→ [⌂] ▸▸ Settings ▸▸ System ▸▸ Audio ▸▸ Navi. And Traffic Announcements

- Select Voice Guidance Volume.
- Set the volume.
- **To leave the menu:** select [↩].

Route guidance is active

▶ Set the volume during a navigation announcement on the steering wheel or under the touchscreen (→ page 440).

Switching audio fadeout on or off during navigation announcements

▶ Press the [⌂] button on the steering wheel on the right.

or

▶ Tap [⌂] on the central display.
▶ Select Settings.
▶ Select System.
▶ Select Audio.
▶ Select Navi. And Traffic Announcements.
▶ Switch Audio Fadeout During Navigation Announcements on or off.
▶ **To leave the menu:** select [↩].

Repeating navigation announcements

Requirements:
- A route has already been created.
- Route guidance is active.

Multimedia system:

▶ In the navigation window, select [🔊] for an upcoming driving maneuver.
▶ Select [🔇].
The current navigation announcement is repeated.

Canceling route guidance

Requirements:
- A route has already been created.
- Route guidance is active.

▶ Select [⚑] in the navigation module (→ page 461).

Overview of off-road status during route guidance

Due to roadworks, for example, there may be differences between the data on the digital map and the actual course of the road. In such cases, the multimedia system will temporarily be unable to locate the vehicle's current position on the digital map. The vehicle is off-road. Road Not Mapped will be shown. Route guidance may be restricted.

When the vehicle is back on a road known to the multimedia system, route guidance continues as normal.

Destination

Saving the current vehicle position

Multimedia system:

▶ When the map is shown, tap on the [▲] current vehicle position.
▶ Select Save Position.
▶ **To save as a favorite:** select Save as Favorite .
▶ **To save as "Home" address:** select Home .
▶ **To save as "Work" address:** select Work .

Managing previous destinations

Multimedia system:

▶ Select Previous Destinations.

Saving the last destination as a favorite

- Select [•••] for the last destination.
  A menu appears.
- **To save as a favorite:** select Save as Favorite .
- **To save as "Home" address:** select Home .
- **To save as "Work" address:** select Work .

Deleting a previous destination

- Select [•••] for the last destination.
- Select Delete.

or

- Select Delete All.
- Confirm the prompt.
  When all the favorites have been deleted, Add Favorite is available, for example.

Editing destination suggestions

Requirements:

- The Allow Destination Suggestions option is switched on (→ page 448).
- For the display of destination suggestions: the multimedia system has gathered sufficient data.

Multimedia system:

- Press and hold on a destination suggestion.
  A menu appears.
- **To cancel a destination suggestion:** select Do Not Suggest Now or No Longer Suggest.
- **To save a destination suggestion:** select Save as Favorite, Home or Work.

ⓘ Delete a destination suggestion from the favorites (→ page 467).

Route guidance with current traffic reports

Traffic information overview

Current traffic reports are received with the Live Traffic Information subscription service.

ⓘ Live Traffic Information is not available in all countries.

The service updates the traffic situation via the Internet connection at short, regular intervals.

Information on the vehicle's position is regularly sent to Mercedes-Benz AG. The data is immediately rendered anonymous by Mercedes-Benz AG and forwarded to the traffic data provider. Using this data, traffic reports relevant to the vehicle's position are sent to the vehicle. The vehicle acts as a sensor for the flow of traffic and helps to improve the quality of the traffic reports.

ⓘ There may be differences between the traffic reports received and the actual road and traffic conditions.

If you do not want to transmit the vehicle position, you have the following options:

- You deactivate the service in the Mercedes me user account.
- You have the service deactivated at an authorized Mercedes-Benz Center.

ⓘ Further hazard warnings are received using the Car-to-X service (→ page 487).

Showing information from the service provider for Live Traffic Information

Requirements:

- The vehicle is equipped with Live Traffic Information.

Multimedia system:

→ [⌂] ▸▸ Apps ▸▸ Mercedes me ▸▸ My Services

▶ Select Live Traffic.

ⓘ You have the following options for extending the subscription:

- At any authorized Mercedes-Benz Center
- With a call to the Mercedes-Benz Customer Assistance Center via the me button (→ page 521)
- If the vehicle identification number (VIN) is linked to your Mercedes me user account, you can renew the subscription yourself. To do this, call up the user profile on the Mercedes me website after logging in with your Mercedes me user account.

Displaying traffic information on the map

Requirements

- Traffic Incidents and Free Flowing Traffic are switched on (→ page 486).

Multimedia system:

→ [⌂]

▶ If necessary, move the map (→ page 489).

The map shows the following traffic information depending on the activated settings:

- Traffic incidents

  These are roadworks, road blocks and warning messages, for example.

  When route guidance is active, the symbols for traffic incidents will be shown in color on the route. Off the route they are gray.

- Warning messages

  Warning messages are shown as the [⚠] symbol.

  Traffic safety information can be shown, e.g. if there are people on the road.

  If the vehicle approaches a danger area, for example the end of a traffic jam in a dangerous position, the [⚠] symbol is shown on the map. If Announce Traffic Warnings is switched on and a message has been issued, an additional announcement is made.

- Traffic flow information:
  - Traffic jam (red line)
  - Slow-moving traffic (orange line)
  - Heavy traffic (yellow line)
  - Free-flowing traffic (green line)
- Display for traffic delays on the current route

  The smallest value for the display for traffic delays is a minute.

Showing traffic incidents on the route

Requirements:

- The Traffic Incidents display is switched on (→ page 486).

Multimedia system:

→ [⌂] ▸▸ Navigation

If there are traffic incidents on the route, these are shown on the map and in the route overview.

ⓘ With the MBUX Voice Assistant you can inform yourself about traffic incidents on your route. Ask, for example How is the traffic on my route? or How is the traffic at home?. A voice output is given.

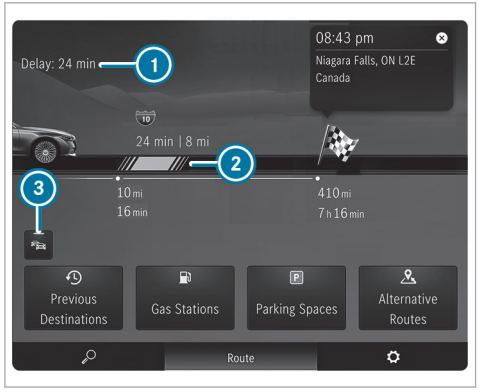

Example: traffic incidents on the route

1. Delay
2. Color display of traffic flow information, delay and length, road name or road number
3. Switches traffic information display on or off

ⓘ During active route guidance, the total delay on the route is displayed:

- in the navigation system in the navigation window
- in other applications in the status line at the top

A traffic incident symbol is, for example for roadworks.
In the map several traffic incidents may be shown on top of each other. The traffic incident symbol shows a plus sign.
If available, the street number can be replaced by a street name or both the name and number.

▶ To see all of the traffic incidents on the route, swipe to the right or left.
The route section is highlighted on the map.

▶ **To show detailed information in the route overview:** tap on a display in the route overview.
The detailed information is shown, for example the road section and the direction.

Calling up detailed information on the map

▶ Tap on traffic flow information on the map, e.g. a red line for a traffic jam section.
The detail information is displayed.

▶ If several lines are shown on top of the other, then select an item of traffic flow information from the list.

Showing traffic incidents on the map

▶ Tap on a traffic incident symbol.
The detail information is displayed.

▶ **Several traffic incidents are in the immediate vicinity:** tap on the top traffic incident symbol and select from the list of traffic incidents.

Switching the traffic information display on

Multimedia system:

→ ⌂ ▸▸ Navigation ▸▸ ⚙

▶ Select View.

▶ Activate Traffic.

▶ Activate Traffic Incidents and Free Flowing Traffic.
Traffic incidents, for example roadworks, local area reports (e.g. fog) and warning messages, are shown on the route.

Car-to-X-Communication

Car-to-X-Communication overview

The following requirements apply for the Car-to-X-Communication service:

- The vehicle is equipped with an MBUX multimedia system with navigation function.
- There is a subscription for the Live Traffic Information service.
- The Car-to-X-Communication service is activated in your Mercedes me user account.

ⓘ Car-to-X-Communication is available in selected countries.

The communication module automatically establishes an Internet connection once the vehicle is switched on. If there are any hazard warnings, they will be provided shortly thereafter. Depending on the mobile phone connection, provision takes place from within a second up to about a minute.

Benefits of Car-to-X-Communication:

- Dangers are automatically detected by the vehicle or can be reported by the driver. These are then sent to vehicles with Car-to-X-Communication in the immediate vicinity.
- If available, current details relating to hazard spots near the vehicle's current position are received.

  This gives you sufficient time to adapt your driving style to the traffic conditions.

The use of Car-to-X-Communication requires the regular transmission of vehicle data to Mercedes-Benz AG. The data is then immediately pseudonymized by Mercedes-Benz AG. The vehicle data is deleted after an appropriate amount of time has elapsed (several weeks) and is not stored permanently.

ⓘ Data which serves as identification is replaced during the pseudonymization process. In this way, your identity is protected against access by unauthorized third parties.

Displaying hazard warnings

Multimedia system:

If hazard warnings are available these can be shown as symbols on the map. The display depends on the settings for the Traffic Incidents option.

▶ Set the option via ⚙ (→ page 486).
If the option is activated, all of the symbols are shown.

If the option is deactivated, the symbols are only shown when there is a hazard warning.

The following hazards may be shown on the map:

- Accidents and breakdowns
- Slippery roads, fog, crosswinds and heavy rain
- Hazards reported manually
- Vehicle with active hazard warning light
- Roadworks
- Additional hazards (if available)

ⓘ If Announce Traffic Warnings is switched off (→ page 473), voice output can indicate a danger area.

Sending hazard warnings

Reporting hazards manually

ⓘ Automatically detected hazard warnings are sent by the vehicle.

▶ When the map is shown, tap on the ▲ current vehicle position.
The Position menu is shown.

▶ Select Report Traffic Incident.
The Thank you for supporting accident prevention! message appears.

Route guidance with augmented reality

Overview of route guidance with augmented reality

⚠ **WARNING** Risk of accident and injury as a result of distraction, incorrect depiction or wrong interpretation of the display

The camera image of the augmented reality display is not suitable as a guide for driving.

▶ Always keep an eye on the actual traffic situation.

▶ Avoid extended observation of the camera image.

During route guidance with augmented reality a camera image with the real traffic scene is shown on the central display before a turning maneuver. The camera image includes additional information, for example arrows indicating a change of direction.

If the options are switched on and this additional information is available, road names and house numbers are displayed (→ page 489).

① House number
② Street name
③ Change of direction arrow

Route guidance with augmented reality will not be available in some situations, e.g. in the event of poor satellite reception or roads that have not been digitized.

Route guidance with augmented reality is not available in all countries.

Activating route guidance with augmented reality

WARNING Risk of accident and injury due to imprecise positioning of additional information

The additional information from the augmented reality display may be inaccurate and is not a substitute for observing and assessing the actual driving situation.

▶ Always keep an eye on the actual traffic situation when carrying out all driving maneuvers.

Multimedia system:

↳ [⌂] ▸▸ Navigation ▸▸ [⚙]

▶ Select View.

▶ Select Augmented Reality Video.

▶ Activate or deactivate Augmented Reality Video.
The camera's video image is shown on the central display before a turning maneuver. The video image includes additional information.

Showing property information for route guidance with augmented reality

Requirements:

- Augmented reality is activated (→ page 489).

Multimedia system:

↳ [⌂] ▸▸ Navigation ▸▸ [⚙]

▶ Select View.

▶ Select Augmented Reality Video.

▶ Activate Street Names and House Numbers.
During route guidance, the activated options are shown as additional information in the camera image.

Map and compass

Setting the map scale

Multimedia system:

↳ [⌂]

Zooming in

▶ When the map is shown, tap twice quickly with one finger on the central display.

or

▶ Move two fingers apart on the central display.

Zooming out

▶ Tap with two fingers on the central display.

or

▶ Move two fingers together on the central display.

ⓘ You can set the unit of measurement of the map scale (→ page 447).

Moving the map

Multimedia system:

↳ [⌂]

▶ When the map is displayed, swipe in any direction with one finger on the central display.

▶ **To reset the map to the current vehicle position:** select [⊕] Center .

Switching the route overview after start on or off

Multimedia system:

→ [⌂] ▸▸ Navigation ▸▸ [⚙]

- Select View.
- Activate [●] or deactivate [○] Route Overview after Start.
  If the option is enabled, the map shows the full route after route guidance is started and, if available, all alternative routes.

Selecting POI symbols for the map display

Multimedia system:

→ [⌂] ▸▸ Navigation ▸▸ [⚙]

POIs include restaurants and hotels, for example. These are displayed as symbols on the map. Not all POIs are available in all countries.

Personal POIs are destinations which you have saved on a USB device, for example.

ⓘ The display of POI symbols on the map can be activated or deactivated as a favorite.

- Select View.
- Select POI Symbols On Map [>].
- Activate Hide All POIs.
  When the option is switched on, the POI symbols for all categories are shown on the map according to the settings in the POI categories.

ⓘ If the conditions are fulfilled, the POI symbols are shown with current online information (→ page 495).

Switching display of categories for quick-access on or off

- Switch a category on or off in the menu.

Selecting categories

- In the menu, select Other Categories [>].
- Activate or deactivate Show All.
  When the option is switched on, the POI symbols for all categories are shown on the map.

or

- Select [>] the categories.
- Activate or deactivate the categories.
  The POI symbols for the selected categories are shown on the map.

Selecting personal POI categories

- In the menu, select Personal POIs [>].
- Select [>] a category.
- Activate or deactivate Show on Map.
- **To issue a signal when approaching:** activate Visual Notification and Acoustic Notification.

Resetting the POI symbol display

- In the menu, select Reset POIs .
  The settings are reset to the standard settings.

Selecting the display of additional information on the map

Multimedia system:

→ [⌂] ▸▸ Navigation ▸▸ [⚙]

- Select View.
- Select Show More Information.
- Switch the options on or off.

The following options are available:

- Current Street

If the option is enabled, it will be displayed in the navigation window.

- Scale

  If the option is switched off, the map scale is only displayed on the map when zooming.

  If the option is enabled, the map scale is permanently displayed on the map.

  The option also influences the display on the driver's display.

- Elevation
- Next Intersection

  If the option is switched on and the journey continues without route guidance, the name of the next intersecting street will be displayed in the navigation window.

Displaying the map version

Multimedia system:

⤳ [⌂] ▸▸ Navigation ▸▸ [⚙]

▶ Select View.

▶ Select Map Data Version.
The detail information is displayed.

ⓘ The online map update service from Mercedes me connect can be used to update the map data (→ page 33).
A message is shown on the central display when a new map version is available.

ⓘ Information about new versions of the digital map can be obtained from an authorized Mercedes-Benz Center.

Overview of area avoidance on the route

You can define areas along a route that you would like to avoid.

Highways or multi-lane highways that pass through an area to be avoided may be included in the route despite being blocked.

Avoiding a new area for the route

Multimedia system:

⤳ [⌂] ▸▸ Navigation ▸▸ [⚙] ▸▸ Route ▸▸ Avoid Areas

▶ Select Avoid New Area.

Starting using the map

▶ Select Using Map.
A red rectangle appears. This designates the area that should be avoided.

▶ Move the map (→ page 489).

▶ Set the map scale (→ page 489).

▶ Select [OK].
The area is entered into the list.

Starting using destination search

▶ Select Via Address Entry.

▶ Enter the address (→ page 34).

▶ Select the destination in the list.
The map appears. The area is saved.

Changing an area to be avoided

Multimedia system:

⤳ [⌂] ▸▸ Navigation ▸▸ [⚙] ▸▸ Route ▸▸ Avoid Areas

▶ Select an area in the list.

▶ Select Edit.

▶ **To move an area on the map:** swipe in any direction on the central display.

Changing the size of the area

▶ Move two fingers apart or together on the central display.

▶ Select OK.
The area is entered into the list.

Taking the area for the route into account

▶ Select the area in the list.

▶ Activate Avoid Area.
If route guidance is active, a new route is calculated.

If there is no route yet, the setting is carried over to the next route guidance.

The route can include an area that is to be avoided in the following cases:

- The destination is located in an area that is to be avoided.
- The route includes freeways or multi-lane freeways which pass through an area to be avoided.
- There is no practical alternative route.

Deleting an area to be avoided

Multimedia system:

→ ⌂ ▸▸ Navigation ▸▸ ⚙ ▸▸ Route ▸▸ Avoid Areas

Deleting an area to be avoided

▶ Select an area in the list.

▶ Select Delete.

▶ Confirm the prompt with Yes.

Deleting all areas to be avoided

▶ If at least two areas to be avoided are set, select Delete All.

▶ Confirm the prompt with Yes.

Map data update overview

As the content of a digital road map has a short life, outdated data may have a negative effect on all navigation functions. For the best MBUX navigation experience, you should install all of the map updates offered by Mercedes-Benz.

The following options are available for the update of map data:

- Online map update
- Updates from the Mercedes me Portal
- Update at an authorized Mercedes-Benz Center

  Additional costs can be incurred in this process.

Online map update

Requirements:

- Mercedes me connect is available.
- You have a Mercedes me user account.
- The Online Map Update service is available for your region.
- The service has been activated.

Installation takes place in the background as an automatic map update.

The MBUX multimedia system installs all of the available map updates for the North American regions in which the vehicle is located or is moved.

The online map update is activated at the latest after the next time the vehicle is switched on.

Updates from the Mercedes me Portal
The map data for several regions can also be updated manually. Log in with your Mercedes me user account at: https://www.mercedes-benz.de/

Follow the menu path My Mercedes Me account > My vehicles > Selection of car > Online Map Update. Select the regions to be downloaded to a storage medium.

After the map data has been copied, connect the storage medium with your vehicle. Select the notification with information about a new version of the map data and start the installation. After the MBUX multimedia system has been restarted, the updated map data is used.

Overview of map data

If map data is reinstalled in a vehicle, no activation code needs to be entered.

For map data purchased as data media, the enclosed activation code must be entered after starting the installation.

Activation codes are only ever valid for one vehicle.

In the event of the following problems, please contact an authorized Mercedes-Benz Center:

- The multimedia system does not accept the activation code.
- You have lost the activation code.

Displaying the compass

Multimedia system:

▶ When the map is shown, tap on the ▲ current vehicle position until the Position menu is shown.

▶ Select Compass.

The compass display shows the following information:

- The current direction of travel with bearing (360° format) and compass direction
- Longitude and latitude coordinates in degrees, minutes and seconds
- Number of satellites from which a signal can be received

Sharing the vehicle position with a contact

Requirements

- A mobile phone is connected to the MBUX multimedia system.
- The connected mobile phone supports sending text messages from the vehicle (→ page 513).

Multimedia system:

The current vehicle position can be shared with a contact.

▶ In the Route menu, select Share Journey.
The display changes to Stop Sharing Journey.

▶ Select the contact (→ page 511).
The text message is sent. The display changes back to the digital map. A symbol is displayed in the status line. When the message has been sent, a notification is displayed.

Setting the map scale automatically

Multimedia system:

Navigation

- Select View.
- Activate Auto Zoom.
  When the option is switched on, the map scale is set automatically depending on your driving speed and the type of road.

ⓘ The automatically selected map scale can be changed manually. After a few seconds, this is automatically reset.
When the option is activated, no detailed display of the intersection or a 3D image is shown in the navigation window during an upcoming driving maneuver.

Displaying the satellite map

Multimedia system:

Navigation

- Select View.
- Activate or deactivate Satellite Map.
  When Satellite Map is selected, they are displayed at the following map scales:
  - On-board maps
    The satellite maps are displayed in map scales from 2 mi (2 km).
  - Online maps
    The satellite maps are displayed in high-resolution map scales from 50 ft (10 m).

  When Satellite Map is not selected, no satellite maps are displayed.

ⓘ The satellite maps for these map scales are not available in all countries.

Displaying the range

Requirements:

- There is an Internet connection.
- Mercedes me connect is available.
- You have a Mercedes me user account.
- The vehicle is connected with the user account and you have accepted the Mercedes me connect terms of use.
  Further information can be found at: https://www.mercedes.me
- The service is available.
- The service has been activated at an authorized Mercedes-Benz Center.

Multimedia system:

Navigation

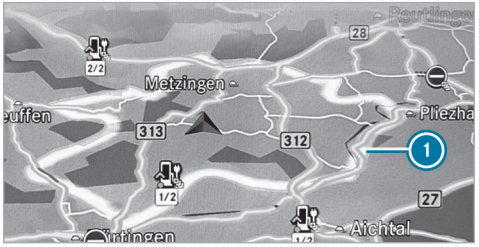

① Display of the total range

- Select View.
- Activate Range.

The range is shown on the map with the following displays:

- For gasoline and diesel vehicles: green display
- For hybrid vehicles:

  Total range: green display ①

  Electrical range: blue display

When the lower reserve capacity is reached then the range display on the map is switched off.

ⓘ The range display on the map is not available in all countries.

Displaying online map contents

Requirements:

- There is an Internet connection.
- Mercedes me connect is available.
- You have a Mercedes me user account.
- The vehicle is connected with the user account and you have accepted the Mercedes me connect terms of use.

  Further information can be found at: https://www.mercedes.me
- The service is available.
- The service has been activated at an authorized Mercedes-Benz Center.

Multimedia system:

⟶ [⌂] ▸▸ Navigation ▸▸ [⚙]

▶ Select View.

▶ Switch on an online service, e.g. Weather. Current weather information is displayed on the navigation map, e.g. temperature or cloud cover.

The service information is not shown in all map scales, e.g. weather symbols.

ⓘ The display of online map content is not available in all countries.

Toll collection with Toll System

Overview of the toll system

⚠ **WARNING** Risk of distraction from information systems and communications equipment

If you operate information systems and communication devices integrated in the vehicle when driving, you could be distracted from the traffic situation. This could also cause you to lose control of the vehicle.

▶ Only operate this equipment when the traffic situation permits.

▶ If you cannot be sure of this, stop the vehicle whilst paying attention to road and traffic conditions and operate the equipment with the vehicle stationary.

You must observe the legal requirements for the country in which you are currently driving when operating the MBUX multimedia system and the control unit.

ⓘ The toll system is optional equipment and is not available in all countries and vehicles.

Debiting of toll charges at freeway toll gates is facilitated with an electronic payment system.

The toll system uses RFID (Radio Frequency Identification) for data transfer between the control unit and the toll station.

The toll system is initially switched off at the factory.

The control unit is in the vehicle glove box.

In order to be able to use the toll system, it must have been registered by the customer and activated by the service provider:

- Activate the toll system in the settings of the MBUX multimedia system or on the control unit.
- There are two ways to register and activate:
  - In the Mercedes me App, register the unit identification number of the control unit and activate the toll system.
  - Alternatively, you can register and activate via the Toll Service app.

  Activation of the toll system can take up to 48 hours after registration.

When the toll system is activated, the automatic detection of the number of vehicle occupants is initially switched off at the factory. The number of vehicle occupants is preset with one person.

The following applies for roads on which toll charges are dependent on the number of vehicle occupants:

- If the automatic detection of the number of vehicle occupants is switched off, the number of vehicle occupants must be selected manually. This ensures correct toll accounting.
- The number of vehicle occupants can be transmitted automatically. In the process, the number of seat belts worn is determined.

  If the number of detected persons does not correspond with the number of persons actually in the vehicle, the number of persons must be manually selected.

The standard setting of one person does not need to be changed for roads which require toll payment regardless of the number of vehicle occupants.

The toll system enables the payment of toll charges in many states of the USA.

ⓘ In Mexico, for example, the toll system can be registered and activated for journeys to the USA.

Notes on use

- You can only use the toll system once registration and activation are complete.
- Drive at the prescribed vehicle speed in the toll lane.
- Mercedes-Benz recommends operation using the MBUX multimedia system. Alternatively, this can also be done on the control unit in the glove box.
- For safety reasons, entries should be made while the vehicle is stationary.
- For further information, please consult the Mercedes me App or an authorized Mercedes-Benz Center.

  Or call 1-800-FOR-MERCedes (in the USA) or 1-800-387-0100 (in Canada).

Registering and activating the toll system

Requirements:

- For activation via Mercedes me:
  - You have a Mercedes me user account.
  - The vehicle is connected with the user account and you have accepted the Mercedes me connect terms of use.

    Further information can be found at: https://www.mercedes.me
  - The Mercedes me App is available on your mobile phone.

ⓘ Registration and activation takes place either via Mercedes me or via an app in the MBUX multimedia system. Both methods are described below.

Registering and activating via Mercedes me

▶ **In the MBUX multimedia system:** select [⌂].

▶ Select Settings.

▶ Select Vehicle.

▶ Select Toll System.
The unit identification number (UID) of the control unit is displayed.

▶ Select On.
The following message appears on the central display: The toll system must be registered and activated in the vehicle's Toll Service app. "Automatic" transmits the number of fastened seatbelts. If this does not correspond to the number of vehicle occupants, please send the number of persons "manually". Specifying the number is not required everywhere.

▶ Press the [OK] button to confirm the message.

▶ **On the mobile phone:** open the Mercedes me App.

ⓘ Alternatively, the services can be called up in your Mercedes me account on the MBUX multimedia system.

▶ Follow the steps in the Mercedes me App to register the unit identification number and activate the control unit.
After successful registration and activation, the toll system is ready for operation.

ⓘ When the toll system is activated, the number of vehicle occupants is first transmitted manually and is preset with one person.

ⓘ Activation of the toll system can take up to 48 hours after registration.

Registering and activating via app

▶ **In the MBUX multimedia system:** select [⌂].

▶ Select Apps.

▶ Select Toll Service.
The current activation status is displayed.

ⓘ More Info offers you further information.

▶ To start registration and activation, select Setup Service.

▶ Follow the directions in the app.

ⓘ Activation of the toll system can take up to 48 hours after registration.

Operation on the MBUX multimedia system

- ▶ Select ⌂.
- ▶ Select Settings.
- ▶ Select Driving.
- ▶ Select Toll System.
- ▶ Switch the toll system on or off.
  If you switch the toll system on or off, the number of vehicle occupants is preset to one person.
- ▶ Switch on Detect Automatically.
  The number of seat belts worn is transmitted and displayed, e.g. 2.
- ▶ If this does not correspond to the number of vehicle occupants, use the number keys to select 1, 2 or 3+.

Operation with the Control Unit

- ▶ Open the glove box (→ page 41).

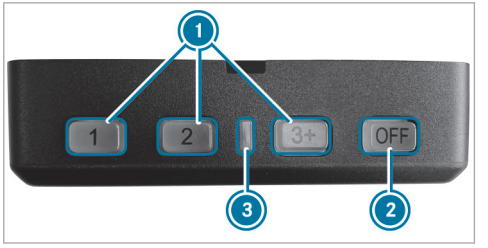

① Buttons for entering the number of vehicle occupants
The control unit is switched off: switches on the control unit

② Switches off the control unit

③ LED lights up green: control unit is ready for operation
LED flashes red: there is an error

- ▶ To enter the number of people in the vehicle, press one of buttons ①.
  This changes the automatic operation to manual operation.

ⓘ The number keys on the control unit correspond to the number keys in the Toll System menu.

Control unit is malfunctioning

If the control unit is malfunctioning, an acoustic signal will sound. Toll payment with the control unit cannot be made.

- ▶ Consult an authorized Mercedes-Benz Center.

Parking service

Notes on the parking service

! NOTE Vehicle damage due to failure to observe the maximum permissible clearance height

If the vehicle height exceeds the maximum permissible clearance height, the roof and other vehicle parts may be damaged.

- ▶ Please observe the maximum clearance height indicated.

- If the vehicle exceeds the permissible clearance height, do not drive in.
- Take the modified vehicle height into account in the case of roof superstructures or other carrier systems.

ⓘ This service is not available in all countries.

Displaying parking options on the map

Requirements:
- Navigation Services is activated in your Mercedes me user account.
- The parking service is part of the scope of the Navigation Services.

Multimedia system:

→ [⌂] ▸▸ Navigation ▸▸ [⚙]

- Activate Parking.
  The parking options within the vicinity of the current vehicle position are shown.

Selecting parking options

! NOTE Vehicle damage due to failure to observe local information and parking conditions

The data is based on the information provided by the respective service providers.

Mercedes-Benz does not guarantee the accuracy of the information provided in relation to the car park or parking area.

- Always observe the local information and conditions.

Requirements
- Navigation Services is activated in your Mercedes me user account.
- The parking service is part of the scope of the Navigation Services.
- Parking is activated (→ page 499).

Multimedia system:

→ [⌂]

- Tap on [P] the map.

or

- In the route overview, select [P] Parking Spaces (→ page 473).
- Select the search position and search filter, e.g. Near destination and parking garages.
  The map shows car parks suited to the selected settings.
- Select a parking option.

  The following information is displayed (if available):
  - Destination address, distance from current vehicle position and arrival time
  - Information on the car park, e.g.
    - Opening times
    - Parking charges
    - Current occupancy
    - Maximum parking time
    - **Maximum access height**

      The maximum access height shown by the parking service does not replace the need for observation of the actual circumstances.

- Available payment options (Mercedes pay, coins, bank notes, cards)
- Details on parking tariffs
- Number of available parking spaces
- Payment method (e.g. at parking meters)
- Services/facilities at the parking option
- Telephone number

▶ Calculate the route (→ page 468).

The following functions can be used (if available):

- Searching for POIs in the vicinity.
- Saving the destination.
- Placing a call at the destination.
- Sharing the destination via the QR code.
- Calling up the web address.
- Showing the destination on the map.

Dashcam

Notes on the dashcam

! NOTE Risk of legal consequences due to violation of legal regulations and data protection provisions

You are legally responsible for operation and use of the dashcam functions.

The legal requirements relating to operation and use of the dashcam can vary depending on the country in which the dashcam is operated.

This function is not permitted in all countries.

▶ Before using the dashcam, read up on the content of the legal regulations, in particular the data protection requirements in the respective country of use.

▶ Observe the legal regulations, in particular the data protection requirements.

ⓘ Observe the following instructions for safe operation:

- Only use FAT32 or exFAT formatted USB storage devices.
- Use USB-IF certified USB storage devices.

  USB-IF is a non-profit corporation and stands for USB Implementers Forum. Based on the USB specification, USB-IF certifies, for example, USB versions, corresponding cables and plugs as well as energy supply processes via the USB interface.
- USB storage devices may be damaged if often or permanently overwritten at high speed. Mercedes-Benz recommends a high-quality external SSD drive.

  The abbreviation SSD stands for Solid State Drive.

ⓘ The file size and therefore the duration of single recording is limited by the limitations of the USB flash drive format. So FAT32 formatted USB flash drives do not allow files larger than 4 GB, for example.

When the file size is reached, the recording stops and you receive a notification.

ⓘ The following functions are available in the Gallery app:

- Switching write protection on or off
- Deleting video files

Additional information about the Gallery app (→ page 527).

Selecting a USB device for a video recording with the dashcam

Requirements:

- At least one USB device is connected with the multimedia system (→ page 542).

Multimedia system:

↳ ⌂ ▸▸ Apps ▸▸ Dashcam

▶ Select the USB symbol.

▶ Select the USB device.

ⓘ When USB devices contain multiple partitions, recorded video files are not always displayed in the recording list.

Mercedes-Benz recommends that you use USB devices with one partition.

Starting or stopping a loop recording with the dashcam

Requirements:

- For recording and saving a video file: a USB device is connected with the multimedia system (→ page 542).
- The vehicle is switched on.

Multimedia system:

↳ ⌂ ▸▸ Apps ▸▸ Dashcam

▶ If several USB devices are connected with the multimedia system, select a USB device (→ page 501).
If no USB device is selected, a selection is made automatically when recording starts.

▶ **To select recording mode:** select Loop Recording.
Loop Recording continuously records short video files. When the memory is full, recording is continued automatically. In doing so, the oldest video file is written over.

▶ **To start:** select Start Recording.
The length of the recording is shown. The Do not remove the storage medium during recording. Before removing the storage medium, eject it first. message appears. The video file is stored on the USB device.

▶ **To end:** select End Recording.

ⓘ In some countries, geo-coordinates (longitude and latitude) are shown in the video image. For technical reasons, the geo-coordinates may show greater inaccuracies.

A message may appear in the following cases:

- The camera is not functional, the Camera Unavailable message appears.

  Have the camera checked in an authorized Mercedes-Benz Center.
- If the country border indication has been switched on (→ page 502).
- If an outdoor recording is started with the camera app during a dashcam recording, the dashcam recording pauses and resumes automatically after the camera recording is finished. A notification to this effect is displayed.

Starting or stopping an individual recording with the dashcam

Requirements:

- For recording and saving a video file: a USB device is connected with the multimedia system (→ page 542).
- The vehicle is switched on.

Multimedia system:

→ [⌂] ▸▸ Apps ▸▸ Dashcam

▶ If several USB devices are connected with the multimedia system, select a USB device (→ page 501).
If no USB device is selected, a selection is made automatically when recording starts.

▶ **To select the recording mode:** select Individual Recording.
Individual Recording stops recording when the memory limit is reached. An individual recording is automatically protected against being overwritten.

▶ **To start:** select Start Recording.
The length of the recording is shown. The Do not remove the storage medium during recording. Before removing the storage medium, eject it first. message appears. The video file is stored on the USB device.

▶ **To end:** select End Recording.

ⓘ In some countries, geo-coordinates (longitude and latitude) are shown in the video image. For technical reasons, the geo-coordinates may show greater inaccuracies.

A report may appear in the following cases:

- Individual Recording: the memory is full or there are only a few minutes recording time available. The video recording stops or will be stopped imminently.

  Change the USB device or delete a video file.
- The camera is not functional, the Camera Unavailable message appears.

  Have the camera checked in an authorized Mercedes-Benz Center.
- If the country border indication has been switched on (→ page 502).
- If an outdoor recording is started with the camera app during a dashcam recording, the dashcam recording pauses and resumes automatically after the camera recording is finished. A notification to this effect is displayed.

Configuring dashcam settings

Requirements:

- A USB device is connected with the multimedia system (→ page 542).

Multimedia system:

→ [⌂] ▸▸ Apps ▸▸ Dashcam

▶ Select [⚙].

Receiving notifications after passing a border crossing

▶ Activate National Borders Alert .
A message is shown if video is being recorded and the vehicle passes a border.

ⓘ This function is not available in all countries.

Starting automatic video recording

▶ Select Automatic Loop Recording.

▶ Activate Automatic Loop Recording.
When the vehicle is started, video recording starts automatically.

ⓘ This function is not available in all countries.

Telephone

Telephony

Notes on telephony

⚠ **WARNING** Risk of distraction from operating integrated communication equipment while the vehicle is in motion

If you operate communication equipment integrated in the vehicle when driving, you could be distracted from the traffic situation. This could also cause you to lose control of the vehicle.

▶ Only operate this equipment when the traffic situation permits.

▶ If you cannot be sure of this, stop the vehicle whilst paying attention to road and traffic conditions and operate the equipment with the vehicle stationary.

⚠ **WARNING** Risk of accident from operating mobile communication equipment while the vehicle is in motion

Mobile communication devices distract the driver from the traffic situation. This can also cause the driver to lose control of the vehicle.

▶ As a driver, only operate mobile communication devices when the vehicle is stationary.

▶ As a vehicle occupant, use mobile communication devices only in the designated area, e.g. in the rear passenger compartment.

You must observe the legal requirements for the country in which you are currently driving when operating the multimedia system and mobile communication equipment in the vehicle.

⚠ **WARNING** Risk of injury due to objects being stowed incorrectly

If objects in the vehicle interior are stowed incorrectly, they can slide or be thrown around and hit vehicle occupants. In addition, cup holders, open stowage spaces and mobile phone receptacles cannot always retain all objects within.

There is a risk of injury, particularly in the event of sudden braking or a sudden change in direction.

▶ Always stow objects so that they cannot be thrown around in such situations.

▶ Always make sure that objects do not protrude from stowage spaces, parcel nets or stowage nets.

▶ Close the lockable stowage spaces before starting a journey.

▶ Always stow and secure heavy, hard, pointed, sharp-edged, fragile or bulky objects in the trunk/cargo compartment.

Observe the additional information on stowing mobile communications devices correctly:

- Loading the vehicle (→ page 170)

Further information can be obtained from an authorized Mercedes-Benz Center or at: https://www.mercedes-benz-mobile.com/

Telephone menu overview

1. Bluetooth® device name of the currently connected mobile phone/of the mobile phone
2. Bluetooth® device name of the currently connected mobile phone/of the mobile phone (two phone mode)
3. Signal strength of the mobile phone network
4. Battery status of the connected mobile phone
5. Options
6. Messages
7. Calls up devices
8. Numerical pad
9. Starts contact search

Bluetooth® profile overview

Bluetooth® profile of the mobile phone	Function
PBAP (Phone Book Access Profile)	Contacts are automatically displayed in the multimedia system
MAP (Message Access Profile)	Message functions can be used

Bluetooth® profile of the mobile phone	Function
HFP (Hands Free Profile)	Wireless telephony is available
SAP (SIM Access Profile)	The car telephone has access to the SIM card data and dials into the mobile phone network via the exterior antenna

Telephony operating modes overview

Depending on your equipment, the following telephony operating modes are available:

- A mobile phone is connected to the multimedia system via Bluetooth® (→ page 505).
- Two mobile phones are connected with the multimedia system via Bluetooth® (two phone mode) (→ page 506).
  - You can use all the functions of the multimedia system with both mobile phones.

ⓘ Irrespective of this, Bluetooth® audio functionality can by used with any mobile phone (→ page 543).

Information on telephony

The following situations can lead to the call being disconnected while the vehicle is in motion:

- There is insufficient network coverage in the area
- You move from one transmission/reception station to another and no communication channels are free
- The SIM card used is not compatible with the network available
- A mobile phone with "Twincard" is logged into the network with the second SIM card at the same time

The multimedia system supports calls in HD Voice® for improved speech quality. A requirement for this is that the mobile phone and the mobile phone network provider of the person you are calling support HD Voice® .

Depending on the quality of the connection, the voice quality may fluctuate.

Connecting a mobile phone

Requirements

- Bluetooth® is activated on the mobile phone (see the manufacturer's operating instructions).
- Bluetooth® is activated on the multimedia system (→ page 445).

Multimedia system:

→ [⌂] ›› Phone ›› [⚙] ›› Devices ›› Devices

Searching for a mobile phone

▶ Select Connect New Device.

Authorizing a mobile phone

▶ Select a mobile phone.
A code is displayed in the multimedia system and on the mobile phone.

▶ **If the codes match:** confirm the code on the mobile phone.

ⓘ For older mobile phone models, enter a 1 to 16-digit number code on the mobile phone and on the multimedia system for authorization.

ⓘ Up to 15 mobile phones can be authorized on the multimedia system.
Authorized mobile phones are reconnected automatically.

ⓘ The connected mobile phone can also be used as Bluetooth® audio equipment (→ page 543).

You can watch an animation on this topic via the following link:

Connecting a second mobile phone (two phone mode)

Requirements

- At least one mobile phone is already connected to the multimedia system via Bluetooth®.

Multimedia system:

⟶ [⌂] ▸▸ Phone ▸▸ [⚙] ▸▸ Devices ▸▸ Devices

▶ Select Connect New Device.

▶ Select the mobile phone.

▶ In some cases, if the query appears, confirm the selection of the mobile phone pair with the Device name 1 + Device name 2 option.
The selected mobile phone is connected to the multimedia system.

Interchanging mobile phones (two phone mode)

Multimedia system:

⟶ [⌂] ▸▸ Phone

Both mobile phones are shown individually in separate tabs.

▶ Select the tab with the desired mobile phone.
Selecting the tab of a specific mobile phone displays the associated telephone contents.

Selecting the other tab switches the view to the other telephone.

The submenus in the telephone menu (e.g. contacts, call lists, messages) relate to the currently selected mobile phone with the exception of the telephone settings. In the telephone settings, settings can be made for both mobile phones.

Changing the function of a mobile phone

Multimedia system:

⟶ [⌂] ▸▸ Phone ▸▸ [⚙] ▸▸ Devices ▸▸ Devices

Activating a function

▶ Select a gray symbol in the line of a mobile phone.
The corresponding function is activated.

Deactivating a function

▶ **One function is active:** select the color symbol in the line of a mobile phone.
The mobile phone is disconnected from the multimedia system.

▶ **Several functions are active:** de-select an active function in the line of one of the mobile phones.
The corresponding function is deactivated.

Replacing mobile phones

Multimedia system:

→ [⌂] ▸▸ Phone ▸▸ [⚙] ▸▸ Devices ▸▸ Devices

No authorized mobile phone available:

- ▶ Select Connect New Device.
- ▶ Select a mobile phone.
- ▶ **Newly authorized mobile phone:** confirm the numerical code on the mobile phone.

Using in single telephone mode

- ▶ Select Device name.
  A newly authorized mobile phone is connected in single telephone mode.

  If the mobile phone has already been authorized and connected in single telephone mode, it is connected again in single telephone mode.

  If a mobile phone is already authorized and has been connected in two phone mode with another mobile phone, a query may come, whether the mobile phone should in future be operated in single telephone mode or connected with another mobile phone in two phone mode.
- ▶ If required, confirm the query about operating mode (single telephone or two phone mode) by confirming the Device name option.

Using in two phone mode

- ▶ Select Device name 1 + Device name 2.
  A newly authorized mobile phone is connected with the selected mobile phone in two phone mode.

  If the mobile phone has already been authorized and connected in single telephone mode, it will be connected in future with the selected mobile phone in two phone mode.

  If the mobile phone was previously connected with another mobile phone, this connection is canceled.

Disconnecting or deleting a mobile phone

Multimedia system:

→ [⌂] ▸▸ Phone ▸▸ [⚙] ▸▸ Devices

Disconnecting a mobile phone

- ▶ Select Disconnect.
  If applicable, the mobile phone will be automatically reconnected when the vehicle is next started.

Deleting a mobile phone

- ▶ Select Devices.
- ▶ Select [•••] in the line of the mobile phone.
- ▶ Select Delete Device.
  The mobile phone is deleted from the system.

Setting the reception and transmission volume

Requirements

- A mobile phone is connected (→ page 505).

Multimedia system:

→ [⌂] ▸▸ Phone ▸▸ [⚙] ▸▸ Devices ▸▸ Devices

This function ensures optimal language quality.

ⓘ Please note that the respective mobile phone must be selected for adjustment of the reception and transmission volume.

▶ Select [•••] in the line of the mobile phone.

▶ Select Volume.

▶ Set the reception and transmission volume using Reception Volume and Transmission Volume.

Further information on the recommended reception and transmission volume: https://www.mercedes-benz-mobile.com/

Setting the ringtone

Multimedia system:

→ [⌂] ▸▸ Phone ▸▸ [⚙] ▸▸ Ringtones

▶ Set the ringtone.

ⓘ If the mobile phone supports the transfer of the ringtone, you will hear the ringtone of the mobile phone instead of that of the vehicle audio system.

Starting or stopping mobile phone voice recognition

Requirements

- At least one mobile phone is connected to the multimedia system (→ page 505).
- The tab with the mobile phone for which voice recognition should be started is selected (→ page 506).

Starting mobile phone voice recognition

▶ Press and hold the [🎤] button on the multifunction steering wheel for more than one second.
Voice recognition is started for the currently selected mobile phone.

Stopping mobile phone voice recognition

▶ Press the [🔇] or [☎] button on the multifunction steering wheel.

ⓘ If a mobile phone is connected via Smartphone Integration, the voice recognition of this mobile phone is always started or stopped.

Note about contact suggestions

The multimedia system can show contact suggestions based on frequently used contacts, outgoing calls and text messages. For this, the Allow Contact Suggestions option must be switched on (→ page 448).

When you open the call list or the message menu, contacts which you can call or write to will be suggested to you. Suggestions will be shown in the Suggestionstab.

ⓘ The multimedia system does not use the content of messages for suggestions.

Selecting options for contact suggestions

Requirements

- The Allow Contact Suggestions option is switched on (→ page 448).
- The multimedia system has gathered sufficient data in order to show contact suggestions.

Multimedia system:

→ [⌂] ▸▸ Phone

▶ Select Recent Calls or Contacts.

- Select Suggestions.
- Select [•••] in the line of the suggested contact.

  The following option is available for selection:
  - Do Not Suggest Now

Calls

Telephone operation

Multimedia system:

→ [⌂] ▸▸ Phone

Making a call by entering numbers

- Select [⠿].
- Enter a number.
- Select [✆].
  The call is made.

Accepting a call

- Select [✆] Accept.

Rejecting a call

- Select [☎] Reject.

Answering a call with a message

- Select [☎] Answer w SMS.

Ending a call

- Select [☎].

Putting a call on In-Car Office's to-do list

- Select [✆] Put call on In-Car Office's to-do list.

Activating functions during a call

The following functions are available during a call:

- [☎] End Call
- [🎤] Mic Off
- [⠿] Number Pad (show to send DTMF tones)
- [👤+] Add Call
- Hands-free

  Transfer the call, e.g. to Front, Rear or All Seats.
- Private Mode

  Transfer the call the telephone or headphones, for example.

- Select a function.

ⓘ Observe that the functions and symbols can vary depending on the vehicle equipment.

Conducting calls with several participants

Requirements:

- There is an active call (→ page 509).
- Another call is being made.

Switching between calls

- Select the contact.
  The selected call is active. The other call is on hold.

Activating a call on hold

- Select the contact of the call on hold.

Conducting a conference call

- Select [👥] Conference.
  The new participant is included in the conference call.

Ending an active call

▶ Select End Call.

ⓘ On some mobile phones, the call on hold is activated as soon as the active call is ended.

Accepting or rejecting a waiting call

Requirements:

- There is an active call (→ page 509).

If you receive a call while already in a call, a message is displayed.

Depending on the mobile phone and mobile phone network provider you will hear a call waiting signal.

Alternatively, in two phone mode you will hear an acoustic signal when the call goes through to the other (not yet active) mobile phone.

▶ Select Accept.
The incoming call is active.

If only one mobile phone is connected with the multimedia system, the previous call will be put on hold.

If during a call you accept a call with the other mobile phone when in two phone mode then the existing call is ended.

or

▶ Select Answer w SMS.
The incoming call is not accepted.

You answer with a message.

or

▶ Select Reject.

ⓘ The function and the behavior depend on your mobile phone network provider as well as on the mobile phone (see the manufacturer's operating instructions).

Using the international dialing code

Multimedia system:

→ ⌂ ▸▸ Phone ▸▸ ⠿

▶ Press and "0" until a "+" appears in the selection field.

▶ Enter the numbers of the country code, regional code and the telephone number.

▶ Select ✆.
The call is made.

Contacts

Information about the contacts menu

The contacts menu contains all contacts from existing data sources, e.g. mobile phone or data storage medium.

Depending on the data source, it is possible to save/load the following number of contacts:

- Permanently saved contacts: 3,000 entries
- Contacts loaded from the mobile phone: 5,000 entries per mobile phone

From the contacts menu, you can perform the following actions:

- Make a call, for example call a contact (→ page 512)
- Navigation (→ page 465)
- Compose messages (→ page 513)
- Additional options (→ page 512)

Mobile phone contacts are automatically displayed when a mobile phone is connected to the multimedia system (→ page 505).

Downloading mobile phone favorite contacts

If the mobile phone supports the function, the favorites of the mobile phone are automatically loaded and appear in the overview of the phone menu.

Calling up contacts

Multimedia system:

→ [⌂] ▸▸ Phone ▸▸ Contacts

The following options can be used to search for contacts:

- Searching by initials
- Searching by name
- Searching by phone number

▶ Enter characters into the search field.

▶ Select the contact.

A contact can contain the following details:

- Phone numbers
- Navigation addresses
- Internet address
- Email addresses
- Relationship (if set)

Managing the format of a contact's name

Multimedia system:

→ [⌂] ▸▸ Phone ▸▸ [⚙]

▶ Select Contacts.

▶ Select Name Format.

▶ Select an option.

Overview of importing contacts

Importing contacts into the contacts menu

Source	Requirements
[▮] USB device	The USB device is connected with the USB port.
Mobile phone	A mobile phone is connected to the multimedia system via Bluetooth®. Contacts are available.

ⓘ Note that the imported contacts remain in the vehicle and can be accessed at any time regardless of the connected mobile phones.

Importing contacts into the contacts menu

Multimedia system:

→ [⌂] ▸▸ Phone ▸▸ [⚙] ▸▸ Contacts ▸▸ Import Contacts

▶ Select a mobile phone <device name>, from which the contacts should be imported.

▶ Select an option.

Saving a mobile phone contact

Multimedia system:

→ [⌂] ▸▸ Phone ▸▸ Contacts

▶ Select [>] in the line of the mobile phone contact.

▶ Select [•••].

▶ Select Save.

▶ Select Yes.
The contact saved in the multimedia system is identified by the MBUX symbol.

Calling a contact

Multimedia system:

→ [⌂] ▸▸ Phone ▸▸ Contacts

- ▶ Select [🔍] Search for Contacts.
- ▶ Enter characters into the search field.
- ▶ Select the contact.
- ▶ Select the telephone number.
  The number is dialed.

Selecting further options in the contacts menu

Multimedia system:

→ [⌂] ▸▸ Phone ▸▸ Contacts

- ▶ Select [>] in the line of the contact.
- ▶ Select [•••].
- ▶ Select an option.

Deleting contacts

Requirements

- The contacts are saved in the vehicle.
- To delete an individual contact, this has been imported manually into the vehicle.

Multimedia system:

→ [⌂] ▸▸ Phone

Deleting all contacts

- ▶ Select [⚙].
- ▶ Select Contacts.
- ▶ Select Delete All MBUX Contacts.
- ▶ Select an option.

Deleting a contact

- ▶ Select Contacts.
- ▶ Select [>] in the line of the contact.
- ▶ Select [•••].
- ▶ Select Delete Contact.
- ▶ Select Yes.

Call list

Overview of the call list

Depending on whether your mobile phone supports the PBAP Bluetooth® profile or not, this can have different effects on the presentation and functions of the call list.

If the PBAP Bluetooth® profile is supported, the effects are as follows:

- The call lists from the mobile phone are displayed in the multimedia system.
- When connecting the mobile phone, you may have to confirm the connection for the PBAP Bluetooth® profile.

If the PBAP Bluetooth® profile is not supported, the effects are as follows:

- The multimedia system generates a call list independently as soon as calls are made in the vehicle.
- The call list is not synchronized with the call lists in the mobile phone.

Making a call from the call list

Multimedia system:

→ [⌂] ▸▸ Phone

- ▶ Select [📞] Recent Calls.
- ▶ Select an entry.
  The call is made.

Selecting additional options in the call list

Multimedia system:

→ [⌂] ▸▸ Phone

▶ Select [ ] Recent Calls.

▶ For contacts that are in the address book: select options.
The contact details are called up.

▶ For contacts where only one number is shown (not in the address book): select [ ].

Deleting the call list

Multimedia system:

→ [⌂] ▸▸ Phone ▸▸ <Device name>
▸▸ [⚙] ▸▸ Devices

▶ Select Delete Recent Calls.

▶ Select Yes.

ⓘ This function is only available if your mobile does not support the PBAP Bluetooth® profile.

Text messages

Overview of message functions

In the message menu you can receive text messages and create and send them with the help of the MBUX voice assistant.

If the connected mobile phone supports the Bluetooth® MAP profile, the message functions can be used on the multimedia system.

You can obtain further information about settings and supported functions of Bluetooth®-capable mobile phones at a Mercedes-Benz service center or at: https://www.mercedes-benz-mobile.com/

Some mobile phones require further settings after being connected to the multimedia system to activate the messaging functionality (see manufacturer's operating instructions).

Setting message displays

Multimedia system:

→ [⌂] ▸▸ Phone ▸▸ <Device name>
▸▸ [⚙] ▸▸ Devices

▶ Select Message Display.

▶ Select On or Off.

Reading messages

Multimedia system:

→ [⌂] ▸▸ Phone ▸▸ <Device name>
▸▸ [ ]

Using the read-aloud function

A message list is shown.

▶ To read aloud, select the [ ] symbol at a conversation.
The message is read aloud.

Creating and sending a new message

Requirements:

- There is an Internet connection.
- At least one mobile phone with reception is connected.
- If applicable, the message function must be activated on the mobile phone.

Multimedia system:

[⌂] ▸▸ Phone ▸▸ <Device name> ▸▸ [voice]

▶ Using the MBUX voice assistant, speak the voice command **Send a message to**, and name the desired contact (→ page 412).

Dictating text

▶ Say the message.
You are guided by the voice dialog.

Replying to a message in the messaging history

Multimedia system:

[⌂] ▸▸ Phone ▸▸ <Device name> ▸▸ [voice]

A message list is shown.

▶ Select [>] next to a contact.
The messaging history with this contact is shown. You will be guided through the steps with the help of a voice dialog.

▶ Say the message.

Forwarding messages

Multimedia system:

[⌂] ▸▸ Phone ▸▸ <Device name> ▸▸ [voice]

A message list is shown.

▶ Speak the voice command **Forward message**.
You are guided by the voice dialog.

Calling a message sender

Multimedia system:

[⌂] ▸▸ Phone ▸▸ <Device name> ▸▸ [voice]

A message list is shown.

▶ Select [>] next to a contact.
The messaging history with this contact is shown.

▶ Select [•••].

▶ Select Call.

Using telephone numbers, URLs or email addresses from a text message

Requirements

- An Internet connection is available to call up a URL.

Multimedia system:

[⌂] ▸▸ Phone ▸▸ <Device name> ▸▸ [voice]

A message list is shown.

▶ Select [>] next to a contact.
The messaging history with this contact is shown.

▶ Select a telephone number or a URL in the message.
If a URL is selected the web browser opens.

If a telephone number is selected the following options are available:

- Call
- New Message

or

▶ **If In-Car Office and the email function are available:** select an email address.
In-Car Office opens.

ⓘ The availability of In-Car Office is country-dependent.

▶ Select an option.

Deleting a message

Multimedia system:

→ [⌂] ▸▸ Phone ▸▸ <Device name> ▸▸ [✉]

A message list is shown.

▶ Select a contact.

▶ Press and hold on a message.

▶ **To delete the message:** select Delete.

Apple CarPlay®

Overview of Apple CarPlay®

⚠ **WARNING** Risk of distraction from information systems and communications equipment

If you operate information systems and communication devices integrated in the vehicle when driving, you could be distracted from the traffic situation. This could also cause you to lose control of the vehicle.

▶ Only operate this equipment when the traffic situation permits.

▶ If you cannot be sure of this, stop the vehicle whilst paying attention to road and traffic conditions and operate the equipment with the vehicle stationary.

You must observe the legal requirements for the country in which you are currently driving when operating the multimedia system.
iPhone® functions can be used via the multimedia system using Apple CarPlay®. They are operated using the touchscreen, Touch Control or Siri® voice control. You can activate voice control by pressing and holding the [🎤] button on the multifunction steering wheel.

ⓘ By briefly pressing the [🎤] button on the multifunction steering wheel you can continue to operate the multimedia system using the MBUX Voice Assistant (→ page 412).

Only one iPhone® at a time can be connected via Apple CarPlay® with the multimedia system.

Also for use of Apple CarPlay® with two phone mode, only one additional mobile phone can be connected using Bluetooth® with the multimedia system.

As access to the iPhone® is restricted by MBUX when an Apple CarPlay® session is active, not all MBUX functions (e.g. dialing from the address book) can be fully provided for the connected device. In this case use Apple CarPlay®.

The full range of functions for Apple CarPlay® is only available with an Internet connection.

The availability of Apple CarPlay® may vary according to the country.

The service provider is responsible for this application and the services and content connected to it.

Apple CarPlay® is a registered trademark of Apple Inc.

You can watch an animation on this topic via the following link:

Information on Apple CarPlay®

The Apple CarPlay® symbol in the status line switches within Apple CarPlay® to the last active display.

If route guidance is active on the multimedia system, it is closed when route guidance is started on the mobile phone.

Connecting an iPhone® via Apple CarPlay® (wired)

Requirements:

- The current version of your device's operating system is being used (see the manufacturer's operating instructions).

ⓘ For safety reasons, the first activation of Apple CarPlay® on the multimedia system must be carried out when the vehicle is stationary and the parking brake applied.

▶ Connect the iPhone® to a USB port on the multimedia system using a suitable cable (→ page 542).
When the application is connected for the first time, a message about data protection regulations appears.

▶ Select Accept & Start if the application should be started.

or

▶ Open the device manager (→ page 506).

▶ Start Apple CarPlay® using the relevant symbol next to the device name.

ⓘ If applicable, a message about data protection regulations appears.

▶ If required confirm the use of Apple CarPlay® on your iPhone®.

Exiting Apple CarPlay®

▶ Select [⌂].

or

▶ Press the [⌂] button on the multifunction steering wheel (MBUX multimedia system).

ⓘ If Apple CarPlay® was not displayed in the foreground before disconnecting, the application starts in the background when reconnected. You can call up Apple CarPlay® using the Apple CarPlay® symbol in the status line.

Connecting an iPhone® via Apple CarPlay® (wireless)

Requirements

- The current version of your device's operating system is being used (see the manufacturer's operating instructions).
- Bluetooth® is activated on the device (see the manufacturer's operating instructions).
- The device is "visible" for other devices.

ⓘ For safety reasons, the first activation of Apple CarPlay® on the multimedia system must be carried out when the vehicle is stationary and the parking brake applied.

Multimedia system:

⤳ [⌂] ▸▸ Phone ▸▸ [⚙] ▸▸ Devices

▶ Connect the mobile phone using Bluetooth® (→ page 505).
When the application is connected for the first time, a message about data protection regulations appears.

▶ Select OK, start Apple CarPlay if the application should be started.

▶ If required confirm the use of Apple CarPlay® on your iPhone®.

ⓘ It is possible at any time to switch between connection via Bluetooth® or Apple CarPlay® (wireless) in the device list.

ⓘ If you have already connected a mobile phone via Bluetooth®, you can connect another iPhone® via Bluetooth® to use Apple CarPlay® via the device manager.

Exiting Apple CarPlay®

▶ Select [⌂].

or

▶ Press the [⌂] button on the Touch Control (MBUX multimedia system).

ⓘ If Apple CarPlay® was not displayed in the foreground before disconnecting, the application starts in the background when reconnected. You can call up Apple CarPlay® using the Apple CarPlay® symbol in the status line.

Calling up Apple CarPlay® sound settings

Multimedia system:

⤳ [⌂] ▸▸ Settings ▸▸ System ▸▸ Audio

▶ Select the sound settings.

Ending Apple CarPlay®

▶ Select the Apple CarPlay® symbol in the device manager (telephone, media) that is next to the device name of the iPhone®.

ⓘ Select the Apple CarPlay® symbol in the device manager in the telephone or media applications if Apple CarPlay® should be restarted.

ⓘ If Apple CarPlay® was not displayed in the foreground before disconnecting, the application starts in the background the next time it is started automatically. You can call up Apple CarPlay® using the relevant symbol in the status line.

Android Auto

Android Auto overview

⚠ **WARNING** Risk of distraction from information systems and communications equipment

If you operate information systems and communication devices integrated in the vehicle when driving, you could be distracted from the traffic situation. This could also cause you to lose control of the vehicle.

▶ Only operate this equipment when the traffic situation permits.

▶ If you cannot be sure of this, stop the vehicle whilst paying attention to road and traffic conditions and operate the equipment with the vehicle stationary.

You must observe the legal requirements for the country in which you are currently driving when operating the multimedia system.
Mobile phone functions can be used with Android Auto using the Android operating system on the multimedia system. They are operated using the touchscreen, Touch Control or voice control. You can activate the voice control system by pressing and holding the button on the multifunction steering wheel.

ⓘ By briefly pressing the button on the multifunction steering wheel you can continue to operate the multimedia system using the MBUX Voice Assistant (→ page 412).

Only one mobile phone at a time can be connected via Android Auto with the multimedia system.

Also for use of Android Auto with two phone mode, only one additional mobile phone can be connected using Bluetooth® with the multimedia system.

The full range of functions for Android Auto is only possible with an Internet connection.

The availability of Android Auto and Android Auto apps may vary according to the country.

The service provider is responsible for this application and the services and content connected to it.

You can watch an animation on this topic via the following link:

Information on Android Auto

The Android Auto symbol in the status line switches within Android Auto to the last active display.

If route guidance is active on the multimedia system, it is closed when route guidance is started on the mobile phone.

Connecting a mobile phone via Android Auto (wired)

Requirements:

- The mobile phone supports Android Auto from Android 5.0.
- The current version of the Android Auto app is installed on the mobile phone.
- In order to use the telephone functions, the mobile phone must be connected to the multimedia system via Bluetooth® (→ page 505).

If there was no prior Internet connection, this is established with the use of the mobile phone with Android Auto.

ⓘ For safety reasons, the first activation of Android Auto on the multimedia system must be carried out when the vehicle is stationary with the parking brake.

▶ Connect the mobile phone to a USB port on the multimedia system using a suitable cable (→ page 542).
When the application is connected for the first time, a message about data protection regulations appears.

▶ Select Accept & Start if the application should be started.

or

▶ Open the device manager (→ page 506).
▶ Start Android Auto using the relevant symbol next to the device name.

Exiting Android Auto

▶ Select .

or

▶ Press the [⌂] button on the Touch Control (MBUX multimedia system).

ⓘ If Android Auto was not displayed in the foreground before disconnecting, the application starts in the background when reconnected. You can call up Android Auto using the Android Auto symbol in the status line.

Connecting a mobile phone via Android Auto (wireless)

Requirements

- The current version of your device's operating system is being used (see the manufacturer's operating instructions).
- The device supports the Android Auto function (wireless).
- Bluetooth® is activated on the device (see the manufacturer's operating instructions).
- The device is "visible" for other devices.
- Bluetooth® is activated on the multimedia system (→ page 445)

ⓘ For safety reasons, the first activation of Android Auto on the multimedia system must be carried out when the vehicle is stationary with the parking brake.

ⓘ The Android Auto function (wireless) is not available in all countries.

Multimedia system:

→ [⌂] ▸▸ Phone ▸▸ [⚙] ▸▸ Devices

▶ Connect the mobile phone using Bluetooth® (→ page 505).

ⓘ Depending on the device configuration, the query whether Android Auto should be started may appear after connecting the mobile phone via Bluetooth®. In this case, the query must be answered with Yes.

▶ Select Start Android Auto.
When the application is connected for the first time, a message about data protection regulations appears.

▶ Select Accept & Start.

ⓘ It is possible at any time to switch between connection via Bluetooth® or Android Auto (wireless) in the device list.

ⓘ If you have already connected a mobile phone via Bluetooth®, you can connect another mobile phone via Bluetooth® to use Android Auto via the device manager.

Exiting Android Auto

▶ Select [⌂].

or

▶ Press the [⌂] button on the Touch Control (MBUX multimedia system).

ⓘ If Android Auto was not displayed in the foreground before disconnecting, the application starts in the background when reconnected. You can call up Android Auto using the Android Auto symbol in the status line.

Calling up the Android Auto sound settings

Multimedia system:

→ [⌂] ▸▸ Settings ▸▸ System ▸▸ Audio

▶ Select the sound settings.

Ending Android Auto

▶ Select the Android Auto symbol in the device manager (telephone, media) that is next to the device name of the mobile phone.

ⓘ Select the Android Auto symbol in the device manager if Android Auto should be restarted.

ⓘ If Android Auto was not displayed in the foreground before disconnecting, the application starts in the background the next time it is started automatically. You can call up Android Auto using the Android Auto symbol in the status line.

Transferred vehicle data with Android Auto and Apple CarPlay®

Overview of transferred vehicle data

When using Smartphone Integration, certain vehicle data is transferred to the mobile phone. This enables you to get the best out of selected mobile phone services. Vehicle data is not directly accessible.

The following system information is transmitted:

- Software release of the multimedia system
- System ID (anonymized)

The transfer of this data is used to optimize communication between the vehicle and the mobile phone.

To do this, and to assign several vehicles to the mobile phone, a vehicle identifier is randomly generated.

This has no connection to the vehicle identification number (VIN) and is deleted when the multimedia system is reset (→ page 451).

The following driving status data is transmitted:

- Transmission position engaged
- Distinction between parked, standstill, rolling and driving
- Day/night mode of the driver display
- Drive type

The transfer of this data is used to alter how content is displayed to correspond to the driving situation.

The following position data is transmitted:

- Coordinates
- Speed
- Compass direction
- Acceleration direction

This data is used by the mobile phone to improve the accuracy of the navigation (e.g. for continuation in a tunnel).

Mercedes me calls

Making a call via the overhead control panel

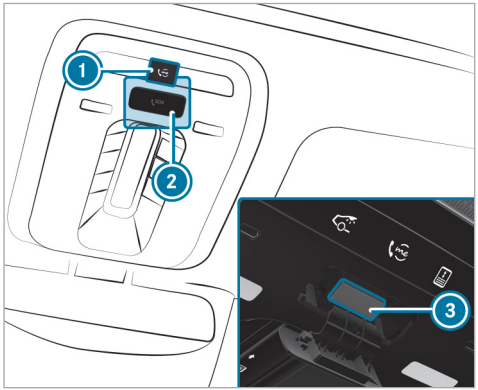

① me button for service or information calls
② SOS button cover
③ SOS button (emergency call system)

Making a Mercedes me call

▶ Press me button ①.

Making an emergency call

▶ To open the cover of SOS button ②, press it briefly.

▶ Press and hold SOS button ③ for at least one second.

If a Mercedes me call is active, an emergency call can still be triggered. This has priority over all other active calls.

Information about the Mercedes me call using the me button

A call to the Mercedes-Benz Customer Center has been initiated via the me button in the overhead control panel or the multimedia system (→ page 521).

Using the voice dialog system you access the desired service:

- Accident and Breakdown Management
- Mercedes-Benz Customer Center for general information about the vehicle

You can find information on the following topics:

- Activation of Mercedes me connect
- Operating the vehicle
- Nearest authorized Mercedes-Benz Center
- Other products and services from Mercedes-Benz

Data is transferred during the connection to the Mercedes-Benz Customer Center (→ page 523).

Calling the Mercedes-Benz Customer Center using the multimedia system

Requirements

- Access to a GSM network is available.
- The contract partner's GSM network coverage is available in the respective region.
- The vehicle must be switched on so that vehicle data can be transferred automatically.

Multimedia system:

→ [⌂] ▸▸ Phone ▸▸ [☎]

▶ Call Mercedes me connect.
After confirmation, the multimedia system sends the required vehicle data. The data transfer is shown in the display.

Then you can select a service and be connected to a specialist at the Mercedes-Benz Customer Center.

Calling the Mercedes-Benz Customer Center after automatic accident or breakdown detection

Requirements:

- The vehicle has detected an accident or breakdown situation (→ page 301).
- The vehicle is stationary.
- The hazard warning lights are switched on.

ⓘ This function is not available in all countries.

The vehicle can detect accident or breakdown situations under certain circumstances.

Requirements for collision detection in the context of accident recovery:

- The vehicle is equipped with an anti-theft alarm system (ATA) (code 551).
- The vehicle is equipped with the interior protection (code 882).
- The vehicle is equipped with the Anti-Theft Protection Package (code P54).
- The collision detection service with theft notification has been activated on Mercedes me connect.

If a collision is detected when the tow-away protection is armed on a locked vehicle, you will receive a notification in the multimedia system when you switch the vehicle on.

The message informs you about the potentially affected area of the vehicle and the strength of the collision.

In the event an accident or breakdown is detected, the emergency guide shows safety notes in the multimedia system display. This may take a few seconds.

ⓘ The availability of collision detection depends on the vehicle.

After quitting the emergency guide display on the multimedia system, a prompt appears asking whether you would like to get support from the Mercedes-Benz Customer Center.

▶ Select Call.
- After your agreement, or if the Mercedes me connect service "Accident and Breakdown Management" is active, the vehicle data is transferred automatically (→ page 525).
- The Mercedes-Benz Customer Center takes your call and organizes the breakdown and accident assistance.

You may be charged for these services.

ⓘ Depending on the severity of the accident, an automatic emergency call can be initiated. This has priority over all other active calls (→ page 529).

ⓘ In addition, if the Mercedes me connect service "Telediagnostics" is active, a similar prompt can appear after a delay in the event of a breakdown. If you are already in contact with the Mercedes-Benz Customer Center or have already received support, this prompt can be ignored or declined.

ⓘ If you answer the prompt for support from the Mercedes-Benz Customer Center with Call Later, the message will be hidden and appear again later.

The prompt triggered by the Mercedes me connect service "Telediagnostics", can either be confirmed or declined. After being declined, this will not be shown again.

Arranging a service appointment via a Mercedes me call

If you have activated the maintenance management service, relevant vehicle data is transferred automatically to the Mercedes-Benz Customer Center. You will then receive individual recommendations regarding the maintenance of your vehicle.

Regardless of whether you have consented to the maintenance management service, the multimedia system reminds you after a certain amount of time that a service is due. A prompt appears asking if you would like to make an appointment.

▶ **To arrange a service appointment:** select Call. After your consent, the vehicle data is transferred and the Mercedes-Benz Customer Center takes your preferred appointment date. The information is then sent to your desired service outlet.

This will contact you to confirm the appointment and if necessary consult about the details.

ⓘ If you select Call Later after the service message appears, the message is hidden and reappears at a later time.

Data transferred during a Mercedes me call

If you initiate a service call using Mercedes me, data is transferred to enable targeted advice and an efficient service.

The following requirements must be fulfilled for the transfer of the data:

- The vehicle is switched on.
- The required data transfer technology is supported by the mobile phone network provider.
- The quality of the mobile connection is sufficient.

Multi-stage transfer depends on the following factors:

- Reason for the initiation of the call
- The available mobile phone transmission technology
- The activated Mercedes me connect services
- The service selected in the voice control system

ⓘ The scope of the data transmitted depends on the vehicle model and vehicle equipment. For technical reasons, not all data is available at all times.

Data transfer if Mercedes me connect services are not activated

If no Mercedes me connect services are activated, the following data is transferred:

- Vehicle identification number
- Time of the call
- Reason for the initiation of the call
- Confirmation of the data protection prompt
- Country indicator of the vehicle
- Set language for the multimedia system
- Telephone number of the communication platform installed in the vehicle

If a call is made for a service appointment via the service reminder, the following data is also transmitted:

- Current mileage and maintenance data

If a call is made after automatic accident or breakdown detection using the multimedia system, the following data is also transmitted:

- Current mileage and maintenance data
- Current vehicle location

If Accident and Breakdown Management is called via the voice control system, the following data can also be called up from the vehicle by the Mercedes-Benz Customer Center:

- Current vehicle location

Data processing

The data transmitted within the scope of the call is deleted from the processing system after the call is finished, in so far as this data is not being used for other activated Mercedes me connect services.

The incident-specific data is processed and stored in the Mercedes-Benz Customer Center and, if required to process the incident, forwarded to the service partner authorized by the Mercedes-Benz Customer Center. Take note of the data protection information on the Mercedes me Internet page https://www.mercedes.me or in the recorded message immediately after calling the Mercedes-Benz Customer Center.

ⓘ The recorded message is not available in every country.

Mercedes me connect

Information on Mercedes me connect

Mercedes me connect consists of multiple services.

You can use the following services via the multimedia system and the overhead control panel, for example:

- Accident and Breakdown Management (me button or situation-dependent display in the multimedia system)
- Mercedes-Benz Emergency Call System (automatic emergency call and SOS button)

The Mercedes me connect Accident and Breakdown Management and the Mercedes-Benz emergency call center are available to you around the clock.

The me button and the SOS button can be found on the vehicle's overhead control panel (→ page 521).

You can also call the Mercedes-Benz Customer Center using the multimedia system (→ page 521).

Please note that Mercedes me connect is a Mercedes-Benz service. In emergencies, first call the national emergency services using the standard national emergency service telephone numbers. In emergencies, you can also use the Mercedes-Benz emergency call system (→ page 58).

Please note the Mercedes me connect terms of use and the data protection information for Mercedes me connect. You can find these in your Mercedes me user account.

Further information about Mercedes me connect services can be obtained in the Mercedes me Portal: https://me.secure.mercedes-benz.com

Information on Mercedes me connect Accident and Breakdown Management

ⓘ Accident and Breakdown Management is not available in every country. Contact an authorized Mercedes-Benz Center to find out whether this function is available in your country.

The Accident and Breakdown Management can include the following functions:

- Supplement to the Mercedes-Benz emergency call system (→ page 58)

  If necessary, the contact person at the Mercedes-Benz emergency call center forwards the call to Mercedes me connect Accident and Breakdown Management. Forwarding the call is however not possible in all countries.
- Breakdown assistance by a technician on location and/or the towing away of the vehicle to the nearest authorized Mercedes-Benz Center

  You may be charged for these services.
- Addition to the emergency guide after automatic accident or breakdown detection (→ page 522)

  In the event of a breakdown or accident, further vehicle data is sent which enables optimal support by the Mercedes-Benz Customer Center and the authorized service partner or breakdown assistance.
- Addition to the Mercedes me connect service Telediagnostics

  With the Telediagnostics function, specific wear and failure reports are recorded by the service provider, in so far as these can be clearly interpreted and are available through the monitoring of components that are subject to diagnostics.

  If your vehicle detects a breakdown or threat of a breakdown, you may be prompted via the multimedia system to contact the Mercedes-Benz Customer Center for further help. This prompt in the multimedia system only appears when the vehicle is stationary.

ⓘ These services are subject to technical restrictions such as the mobile phone coverage, mobile network quality and the ability of the processing systems to interpret the transferred data. In some circumstances, this can result in delays or the failure of the information to appear in the multimedia system.

Please note that the service and breakdown call is a Mercedes-Benz service. In emergencies, be sure to contact the usual national emergency number first or use the Mercedes-Benz emergency call system (→ page 528).

More information about Mercedes me connect services can be obtained in the Mercedes me Portal: https://me.secure.mercedes-benz.com

Data transferred during Mercedes me connect call services

The data transferred during a Mercedes me connect call depends on:

- The reason for initiation of the call

- The service that is selected in the voice control system
- The activated Mercedes me connect services

You can find out which data is transferred when using the services in the currently valid Mercedes me connect terms of use and the data protection information for Mercedes me connect. You can find these in your Mercedes me user account.

Mercedes me Apps

Information about Mercedes me

With a Mercedes me user account you have access to Mercedes-Benz services and offers.

Availability is dependent both on the country and equipment.

You can obtain further information at an authorized Mercedes-Benz Center or in the Mercedes me Portal: https://me.secure.mercedes-benz.com

Further information about on-demand features via Mercedes me can be found in the "General notes" section (→ page 77).

ⓘ Make sure you always keep the Mercedes me Apps updated.

Calling up the Mercedes me user account

Multimedia system:

→ [⌂] ▸▸ Apps ▸▸ Mercedes me

Vehicle is linked to user account and Mercedes me is available

▶ Select Mercedes me ID.
Information about the linked user account appears.

Your vehicle is not linked to the user account

ⓘ If you do not yet have a Mercedes me user account, you can create one at: https://www.mercedes.me or in the Mercedes me App. A valid email address or phone number is required for this.

▶ Select [⌂].

▶ Select Apps.

▶ Select Mercedes me.

▶ Follow the instructions on the display to link the user account with the vehicle.

ⓘ If the Mercedes me App is available on a mobile phone, the vehicle connection can be accomplished using the QR code shown.

Calling up the Mercedes me services

Requirements:

- The vehicle is connected with the user account.

Multimedia system:

→ [⌂] ▸▸ Apps ▸▸ Mercedes me

▶ Select My Services.
The Mercedes me connect services for which you have a valid license are displayed in alphabetical order.

Ordering or extending Mercedes me connect services

To order or renew Mercedes me connect services, use the Store.

▶ Select [⌂].

▶ Select Store.

Deleting a connection between a user account and the vehicle

Requirements

- The user profile of the user account that was first linked to the vehicle is selected.
- The user profile is synchronized (→ page 434).
- A Mercedes me PIN has been set.

Multimedia system:

⤳ [⌂] ▸▸ Apps ▸▸ Mercedes me

▶ Select Mercedes me ID.

▶ Select Delete vehicle connection.

ⓘ Only the user, whose user account was first connected with the vehicle can delete the connection between all user accounts and the vehicle.

Selecting apps

Requirements

- Depending on the app, the general terms and conditions are confirmed.

Multimedia system:

⤳ [⌂] ▸▸ Apps

▶ Select an app.

The following apps are available, for example:

- Weather
- Browser
- Additional apps, which are purchased or installed subsequently

ⓘ You can also access both of the first two apps via the quick access at Apps.

ⓘ The available features are country-dependent. License fees may be applicable.

The following functions are available for apps, for example:

- Search function
- Filter function, for displaying search results at the current vehicle position or at the destination
- Display of detailed information
- Read-aloud function
- Setting functions

Using the Gallery app

Multimedia system:

⤳ [⌂] ▸▸ Apps

▶ Select Gallery.

Images and video recordings are displayed from the following sources, for example:

- Dashcam video recordings
- Collision detection images
- Video recordings and images from other available sources
- Favorites

▶ Select a tab.

Filtering displays

▶ Select [⚙].

▶ Select an option.
All files, all images or all video recordings are displayed.

Playing back a video recording

▶ Select [▶].
Playback starts.

- **To continue playback in full screen mode:** tap on the display.
- **To pause playback:** select ⏸.
- **To continue playback from the desired position:** move the ⊙ position on the timeline by sliding it.
- **To select the previous or next video recording:** swipe to the right or left.

Scrolling and zooming images

- **To scroll:** swipe on the image in one direction.
- **To zoom:** tap twice in quick succession on an image.
- **To select the previous or next image:** swipe to the right or left.

Adding or removing a file from the favorites

- Press and hold on a file.
- Select Add to Favorites/Remove from Favorites.
  A corresponding message appears.

Switching write protection on or off

ⓘ Active write protection is not supported by every app.

- Press and hold on a file.
- Activate ⊙ or deactivate ⊙ Write Protection.

Deleting files

- Select ✎.
- **To delete a single file:** tap on a file.
  ✓ will appear.
- **To delete all files:** tap on ☰✓.
- **To delete:** select 🗑.
  A prompt appears.
- Select Yes.

ⓘ A single file can be deleted even after a long press on the file.

Mercedes-Benz emergency call system

Information on the Mercedes-Benz emergency call system

Your vehicle is equipped with the Mercedes-Benz emergency call system ("eCall"). This feature can help save lives in the event of an accident. eCall in no way replaces assistance provided from dialing 911.

Mercedes-Benz eCall only functions in areas where mobile phone coverage is available from the wireless service providers. Insufficient network coverage from the wireless service providers may result in an emergency call not being transmitted.

eCall is a standard feature in your Mercedes-Benz vehicle. In order to function as intended, the system relies on the transmission of data detailed in the Transmitted Data section that follows.

To disable eCall, a customer must visit an authorized Mercedes-Benz Service department to deactivate the vehicle's communication module.

Deactivation of this module prevents the activation of any and all Mercedes me connect services. After the deactivation of eCall, automatic

emergency call and manual emergency call will not be available.

The vehicle must be switched on before an automatic emergency call can be made.

ⓘ eCall is activated at the factory.

ⓘ eCall can be deactivated by an authorized Mercedes-Benz dealer. Please note that in the event ownership of the vehicle is transferred to another owner in its deactivated state, eCall will remain deactivated unless the new owner visits an authorized Mercedes-Benz dealership to reactivate the system.

Overview of the Mercedes-Benz emergency call system

eCall can help to reduce the time between an accident and the arrival of emergency services at the site of the accident. It helps locate an accident site in places that are difficult to access. However, even if a vehicle is equipped with eCall, this does not mean the system is ON. As such, eCall does not replace dialing 911 in the event of an accident.

An emergency call can be made automatically or manually.

Only make emergency calls if you or others are in need of rescue. Do not make an emergency call in the event of a breakdown or a similar situation.

Messages on the display

SOS NOT READY: the vehicle is not on or eCall not available.

During an active emergency call, SOS appears in the display.

You can find more information on the regional availability of eCall at: https://www.mercedes-benz-mobile.com/extra/ecall/

ⓘ If there is a malfunction of the emergency call system, the loudspeakers, microphone, air bag or the SOS button, for example, are faulty.

You can recognize a malfunction in the emergency call system by the following displays:

- A corresponding message will also appear in the driver's display.
- The SOS button lights up red continuously.

Triggering an automatic Mercedes-Benz emergency call

Requirements:

- The vehicle is switched on.
- The starter battery is sufficiently charged.

The Mercedes-Benz emergency call system triggers an emergency call automatically in the following cases:

- After activation of the restraint systems such as air bags or Emergency Tensioning Devices after an accident
- After an automatically initiated emergency stop by Active Emergency Stop Assist

The emergency call has been made:

- A voice connection is made to the Mercedes-Benz emergency call center.
- A message with accident data is transmitted to the Mercedes-Benz emergency call center.

  The Mercedes-Benz emergency call center can transmit the vehicle position data to one of the emergency call centers.

The SOS button in the overhead control panel flashes until the emergency call is finished.

It is not possible to immediately end an automatic emergency call.

If no connection can be made to the emergency services either, a corresponding message appears in the media display.

▶ Dial the local emergency number on your mobile phone.

If an emergency call has been initiated:

- Remain in the vehicle if the road and traffic conditions permit you to do so until a voice connection is established with the emergency call center operator.
- Based on the call, the operator decides whether it is necessary to call rescue teams and/or the police to the accident site.
- If no vehicle occupant answers, an ambulance is sent to the vehicle immediately.

Triggering a manual Mercedes-Benz emergency call

▶ **To use the SOS button in the overhead control panel:** press the SOS button at least one second long (→ page 521).

or

▶ **To use voice control:** use the voice commands of the MBUX voice assistant (→ page 416).

The emergency call has been made:

- A voice connection is made to the Mercedes-Benz emergency call center.
- A message with accident data is transmitted to the Mercedes-Benz emergency call center.

  The Mercedes-Benz emergency call center can transmit the vehicle position data to one of the emergency call centers.
- Remain in the vehicle if the road and traffic conditions permit you to do so until a voice connection is established with the emergency call center operator.
- Based on the call, the operator decides whether it is necessary to call rescue teams and/or the police to the accident site.

If no connection can be made to the emergency services, a corresponding message appears in the central display.

▶ Dial the local emergency number on your mobile phone.

Ending an unintentionally triggered manual Mercedes-Benz emergency call

▶ Select ☎ on the multifunction steering wheel. Depress button for several seconds.

Data transfer of the Mercedes-Benz emergency call system

In the event of an automatic or manual emergency call the following data is transmitted, for example:

- Vehicle's GPS position data
- GPS position data on the route (a few hundred meters () before the incident)
- Direction of travel
- Vehicle identification number
- Vehicle drive type
- Number of people detected in the vehicle

- Whether Mercedes me connect is available or not
- Whether the emergency call was initiated manually or automatically
- Time of the accident
- Language setting on the multimedia system

Data transmitted is vehicle information. For any questions about the collection, use and sharing of the eCall system data, please contact MBUSA's Customer Assistance Center at 800-FOR-MERC.

For Canada, please contact MBC's Customer Assistance Center at 1-800-387-0100.

Customer requests for covered information should be submitted via the same channels.

For accident clarification purposes, the following measures can be taken up to an hour after the emergency call has been initiated:

- The current vehicle position can be determined.
- A voice connection to the vehicle occupants can be established.

Online and Internet functions

Internet connection

Information on connecting to the Internet

⚠ **WARNING** Risk of distraction from information systems and communications equipment

If you operate information systems and communication devices integrated in the vehicle when driving, you could be distracted from the traffic situation. This could also cause you to lose control of the vehicle.

▶ Only operate this equipment when the traffic situation permits.

▶ If you cannot be sure of this, stop the vehicle whilst paying attention to road and traffic conditions and operate the equipment with the vehicle stationary.

You must observe the legal requirements for the country in which you are currently driving when operating the multimedia system.

⚠ **WARNING** Risk of accident from operating mobile communication equipment while the vehicle is in motion

Mobile communication devices distract the driver from the traffic situation. This can also cause the driver to lose control of the vehicle.

▶ As a driver, only operate mobile communication devices when the vehicle is stationary.

▶ As a vehicle occupant, use mobile communication devices only in the designated area, e.g. in the rear passenger compartment.

You must observe the legal requirements for the country in which you are currently driving when operating mobile communication equipment in the vehicle.

Depending on the vehicle's equipment and availability in the country, you can establish an Internet connection in the following ways:

- **Vehicles with a communication module:**

- Using the communication module including data roaming (→ page 532)
- Using Bluetooth® or Wi-Fi with a data-enabled mobile phone

- **Vehicles without a communication module:**
  - Using Bluetooth® with a data-enabled mobile phone
  - Using Wi-Fi with a data-enabled mobile phone

The Internet functions can only be used to a limited degree whilst driving.

Setting up an Internet connection using the communication module

Requirements

- The vehicle is equipped with a permanently installed communication module.
- A Mercedes me user account is available.
- The vehicle is linked to a Mercedes me user account.
- The Entertainment Package is active.
- The Comfort Data Volume service is active.

Multimedia system:

→ [⌂] ▸▸ Settings ▸▸ System ▸▸ Internet and Bluetooth ▸▸ Manage Internet Access

▶ Select Purchased Data Plan.

For most Mercedes me connect services, data volume is available when purchasing the services.

Additional data volume is required to use some functions, e.g. web browser or Wi-Fi hotspot.

If the data volume limit is reached, the availability of Mercedes me connect services is limited.

Depending on the vehicle equipment, you can purchase a data package directly from a mobile phone network provider via the Mercedes me Store. To be able to use the data package, you conclude a separate contract with a mobile phone network provider via the Mercedes me Store, which can be terminated at any time and for which there are no costs. This contract is a prerequisite for using the services from the previously purchased package. The availability of this option is dependent on the country.

If the data package option is not available or can be upgraded, you can purchase data volume directly from the mobile phone network provider for a fee.

ⓘ Visit an authorized Mercedes-Benz Center to find out whether it is possible to purchase data volume in your country **directly from a mobile phone network provider**.

ⓘ Alternatively, and if available, you can utilize the tethering function of a mobile phone via Wi-Fi or Bluetooth® to use the web browser or Wi-Fi hotspot.

ⓘ With external Wi-Fi hotspots, which are encrypted via TKIP, online software updates cannot be carried out via the external Wi-Fi hotspot.

Disconnecting the automatic Internet connection via communication module

Requirements:

- Wi-Fi or Bluetooth® tethering are available in the vehicle.

Multimedia system:

⮕ [⌂] ▸▸ Settings ▸▸ System
▸▸ Internet and Bluetooth
▸▸ Manage Internet Access

▶ Select the [•••] settings in the line of Purchased Data Plan.

▶ **To disconnect the automatic connection:** select the Delete Entry option.

ⓘ The communication module is removed from the list of known hotspots, but can be reconnected manually at any time (→ page 532).

The Delete Entry option permits the use of purchased data volume to be limited. The system is prevented from automatically establishing a connection to the communication module after this option has been activated.

Setting up an Internet connection via Wi-Fi

Requirements:

- The Wi-Fi function is activated on the multimedia system (→ page 446).
- The Wi-Fi hotspot function is activated on the mobile phone (see the manufacturer's operating instructions).
- Internet access via Wi-Fi is activated (see the manufacturer's operating instructions).

Multimedia system:

⮕ [⌂] ▸▸ Settings ▸▸ System
▸▸ Internet and Bluetooth
▸▸ Manage Internet Access

ⓘ This function is country-dependent.

The mobile phone is listed in the Internet device manager

▶ Select the mobile phone with the [Wi-Fi] symbol.

The mobile phone is not listed in the Internet device manager

▶ Select Search for Access.

▶ Select the mobile phone with the [Wi-Fi] symbol.
It may take a few seconds until the device is found by the Wi-Fi search.

▶ Log in to the Wi-Fi network (→ page 446).

The Internet connection via Wi-Fi is restricted or does not function in the following cases:

- The mobile phone is switched off
- Mobile data use is deactivated on the mobile phone
- The Wi-Fi function is deactivated on the multimedia system
- The Wi-Fi function is deactivated on the mobile phone
- Internet access via Wi-Fi is deactivated on the mobile phone

Setting up an internet connection via Bluetooth®

Requirements:

- The mobile phone supports the Bluetooth® profile PAN (Personal Area Network).
- The mobile phone is connected to the multimedia system via Bluetooth® (→ page 505).
- Internet access via Bluetooth® is activated (see the manufacturer's operating instructions).

Multimedia system:

→ [⌂] ▸▸ Settings ▸▸ System ▸▸ Internet and Bluetooth ▸▸ Manage Internet Access

ⓘ This function is country-dependent.

The mobile phone is listed in the Internet device manager

▶ Select the mobile phone with the [ᛒ] Bluetooth® symbol.

The mobile phone is not listed in the Internet device manager

▶ Select Search for Access.
In the list displayed, all mobile phones already known to the multimedia system are shown. New devices can be set up using the phone application.

▶ Connect the mobile phone using Bluetooth® (→ page 505).

ⓘ If a new mobile phone is connected using Bluetooth®, this is also used for the telephone application.

The Internet connection via Bluetooth® is restricted or does not function in the following cases:

- The mobile phone is switched off
- The mobile phone network coverage is insufficient
- Mobile data use is deactivated on the mobile phone
- The Bluetooth® function on the multimedia system is switched off and the mobile phone is to be connected via Bluetooth®
- The Bluetooth® function is switched off on the mobile phone and the mobile phone is to be connected via Bluetooth®
- Neither the mobile phone network nor the mobile phone allow simultaneous use of a telephone and an Internet connection
- The mobile phone has not been enabled for Internet access via Bluetooth®

Canceling Internet access permission for a mobile phone

Multimedia system:

→ [⌂] ▸▸ Settings ▸▸ System ▸▸ Internet and Bluetooth ▸▸ Manage Internet Access

▶ Select options [•••] next to the name of the mobile phone.

▶ Select Delete Configuration.

▶ Select Yes.

Establishing an Internet connection

Multimedia system:

→ [⌂] ▸▸ Apps

▶ For example, select [🌐] Browser.

If you select a function that requires an Internet connection and the system is currently offline, a menu opens with a selection of possible Internet accesses as well as all tethering devices that are within range.

▶ Select an Internet access from the list.
The Internet connection is established.

ⓘ The list of possible Internet connections can be called up using the extended status line.

ⓘ Depending on the vehicle equipment and country availability, you can establish an Internet connection via the communication module or connected mobile phones.

ⓘ The availability of the web browser depends on the country.

Connection status

Connection status overview

Depending on the connection status, the following symbols can appear on the central display in the status line:

- [ ]: a Wi-Fi device is selected as Internet access.
- [ ]: a Bluetooth® device is selected as Internet access.
- Mobile communications standard (e.g. 4G + double arrow symbol): the communication module is selected as the hotspot.

Displaying the connection status

Multimedia system:

→ [ ]

▶ Briefly press the status line.
The extended status line is displayed.

▶ Briefly press the Internet symbol in the symbol overview.
The current connection status is displayed.

Notes on displaying the connection status

- When connecting via Wi-Fi, the connection status and device name are displayed.
- When connecting via a Bluetooth® device, the connection status, device name, and network type are displayed.
- In the case of a connection via the communication module the following status information can be shown:
  - Type of network
  - Status (online, offline, data volumes available or used, limited service)
- For vehicles with a communication module, the connection data of non-user paid services can be displayed via Mercedes me connect.

Web browsers

Calling up a web page

⚠ **WARNING** Risk of distraction from information systems and communications equipment

If you operate information systems and communication devices integrated in the vehicle when driving, you could be distracted from the traffic situation. This could also cause you to lose control of the vehicle.

▶ Only operate this equipment when the traffic situation permits.

▶ If you cannot be sure of this, stop the vehicle whilst paying attention to road and traffic conditions and operate the equipment with the vehicle stationary.

You must observe the legal requirements for the country in which you are currently driving when operating the multimedia system.
Multimedia system:

→ [⌂] ▸▸ Apps ▸▸ [🌐] Browser

Calling up a new web page

▶ Select Search.

▶ Entering a web address.

▶ Select OK.

ⓘ The function is country-dependent.

ⓘ No web pages can be displayed on the multimedia system while driving.

Calling up a website from the browser history

▶ **To call up the previous page from the history:** select [<].

Web browser overview

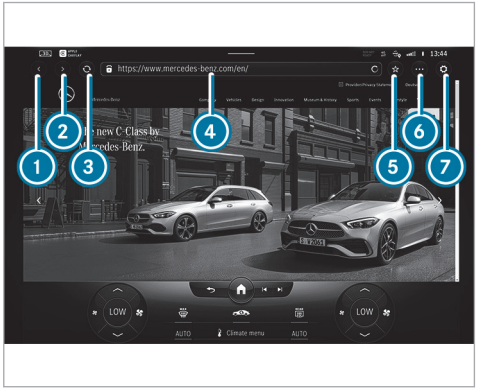

1. Previous website
2. Next website
3. Update
4. URL
5. Adds/removes bookmarks
6. Options
7. Settings

F254 0138 13

ⓘ Under [•••] you have the following options:

- Tabs
- Bookmarks & History
- Reading Mode
- Share Link
- Share Content
- Request Mobile Website

Calling up web browser options

Multimedia system:

→ [⌂] ▸▸ Apps ▸▸ [🌐] Browser ▸▸ [•••] ▸▸ Bookmarks & History

The following functions are available:

- Bookmarks
- Browser History
- Entered URLs

▶ Select an option.

▶ Change the settings.

Calling up the web browser settings

Multimedia system:

→ [⌂] ▸▸ Apps ▸▸ [🌐] Browser ▸▸ [⚙] ▸▸ Settings

The following functions are available:

- Block Pop-ups
- Allow Cookies
- Activate Javascript

▶ Switch a function on [◉] or off [○].

Deleting browser data

Multimedia system:

→ [⌂] ▸▸ Apps ▸▸ [🌐] Browser ▸▸ [⚙] ▸▸ Browser Data

The following specific browser data can be deleted:

- Cache
- Cookies
- Form Data

▶ Select one of the options shown.

Managing bookmarks

Multimedia system:

→ [⌂] ▸▸ Apps ▸▸ [🌐] Browser ▸▸ [•••]

▶ Select Bookmarks & History.
▶ Select [•••] after the bookmark.
A menu with options opens.

The following options are available:

- Delete Entry
- Delete All
- Edit
- Share

▶ Select one of the options shown.

Managing tabs

Multimedia system:

→ [⌂] ▸▸ Apps ▸▸ [🌐] Browser ▸▸ [•••] ▸▸ Tabs

Opening a new tab

▶ Select New Tab.

Changing tab

▶ Select the icon for the desired tab.

Closing a tab

▶ Press and hold the icon of the tab to be closed until a menu appears.
▶ Select Close.
The tab is closed.

Private mode

▶ Switch private mode on [◉] or off [○].
If the private mode is switched on, an icon appears in the input line of the web browser.

ⓘ In private mode, neither the history nor cookies are saved.
Bookmarks can also be created in private mode.

Sharing URLs from the web browser

Requirements

- To share via QR code: an app for scanning the QR code is installed on the mobile device.

Multimedia system:

→ [⌂] ▸▸ Apps ▸▸ [🌐] Browser ▸▸ [•••]

Sharing URLs via QR code

▶ Select Share Link.
A QR code appears.

▶ Scan the displayed QR code with a mobile device.

Sharing URLs with another display

▶ Select Share Content.

▶ In the menu drag and drop a display to another display.
The displayed web page opens on the other display.

Setting the web browser in the background

Multimedia system:

→ [⌂] ▸▸ Apps ▸▸ [🌐] Browser

▶ Press [⌂].
Audio playback continues.

TuneIn Radio

Calling up TuneIn Radio

Requirements:

- There is a user account at https://www.mercedes.me.
- The vehicle is linked to the Mercedes me user account.
- The TuneIn radio service is activated.
- The data volume is available.

  Depending on the country, data volume may need to be purchased.
- A fast Internet connection for data transmission free of interference.

ⓘ The functions and services are country-dependent. For more information, consult an authorized Mercedes-Benz Center.

Multimedia system:

→ [⌂] ▸▸ [♪] Radio

▶ Select TuneIn Radio.
The TuneIn Radio menu appears. The last station set starts playing.

ⓘ The connection quality depends on the local mobile phone reception.

Overview of TuneIn Radio

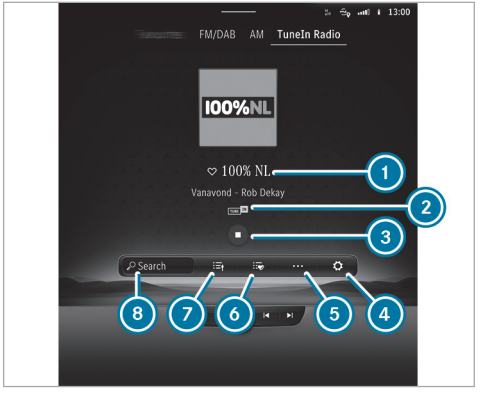

1. Internet Radio provider
2. Additional information on the current station
3. Controls playback
4. Settings

5 Additional options
6 Favorites
7 Station list
8 Search

Selecting and connecting to TuneIn radio stations

Multimedia system:

Radio ▸▸ TuneIn Radio

▶ Select .
▶ Select a category.
▶ Select a station.
The connection is established automatically.

or

▶ Select the search field.
▶ Enter a station name.

ⓘ A relatively large volume of data can be transmitted when using Internet Radio.

Saving/deleting a TuneIn Radio station as a favorite

Multimedia system:

Radio ▸▸ TuneIn Radio

Saving favourites

▶ Select a station.
▶ Press the symbol next to the station name.

Deleting favorites

▶ Select a station.
▶ Press the symbol next to the station name.

Setting Internet Radio options

Multimedia system:

Radio ▸▸ TuneIn Radio ▸▸ ▸▸ TuneIn

The following options are available:

- Select Stream: select the stream quality
- Login to TuneIn Account: log in to your TuneIn user account
- Log Out of Account: log out of your TuneIn user account

▶ Select an option.

Media

Information about media mode

Information about supported formats and data storage media

WARNING Risk of distraction when handling data storage media

If you handle a data storage medium while driving, your attention is diverted from the traffic conditions. This could also cause you to lose control of the vehicle.

▶ Only handle a data storage medium when the vehicle is stationary.

Supported formats and data storage media:

Permissible file systems	FAT32, exFAT, NTFS
Permissible data storage media	USB devices, iPod®/iPhone®, MTP devices, Bluetooth® audio devices
Supported audio formats	MP3, WMA, AAC, WAV, FLAC, ALAC
Supported video formats	MPEG, AVI, MKV, MP4, M4V, WMV

ⓘ Observe the following notes:

- The multimedia system supports a total of up to 50,000 files.
- Data storage media up to 2 TB are supported (32-bit address space).
- Due to the large variety of available music and video files regarding encoders, sampling frequency and data transfer rates, playback cannot be guaranteed.
- Due to the wide range of USB devices available on the market, playback cannot be guaranteed for all USB devices.
- Videos up to FullHD (1920x1080) are supported.
- Copy-protected music and video files or DRM (Digital Rights Management) encrypted files cannot be played back.
- MP3 players must support Media Transfer Protocol (MTP).

Information on copyright protection and trademarks

Audio files which you create yourself (e.g. copies of data storage media you make yourself) are generally subject to copyright protection. In many countries, reproductions are not permitted without the prior consent of the copyright holder, even for private use. Make sure that you know about the applicable copyright regulations and that you comply with these.

Manufactured under license from Dolby Laboratories. Dolby, Dolby Audio and the double-D symbol are trademarks of Dolby Laboratories.

For DTS Patents, see https://patents.dts.com. Manufactured under license from DTS Licensing Limited. DTS, the Symbol, & DTS and the Symbol together are registered trademarks, and DTS Tru-Volume is a trademark of DTS, Inc.©. DTS, Inc. All Rights Reserved.

DTS® Connected Radio™

For DTS Patents, see http://patents.dts.com. Manufactured under license from DTS Licensing Limited. DTS, DTS Connected Radio, and the DTS logo are registered trademarks or trademarks of DTS, Inc. in the United States and other countries. © 2020 DTS, Inc. ALL RIGHTS RESERVED. Lyrics licensed and provided by Lyric Find™. Content licensed and sourced from Radioplayer™.

Gracenote, the Gracenote logo and logotype, "Powered by Gracenote", MusicID and Playlist Plus are either registered trademarks or trademarks of Gracenote, Inc. in the United States and/or other countries.

TIDAL and TIDAL logo are registered trademark of Aspiro AB in the European Union and other countries.

Overview of the media menu

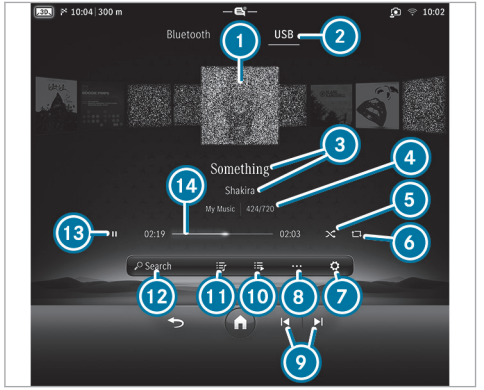

1. Album cover
2. Active media source
3. Track and artist
4. Active data storage medium and current track number/track in playback list
5. Random playback
6. Repeat
7. Settings
8. Additional options
9. Previous or next track and fast rewind or fast forward
10. Additional categories
11. Playlists and categories
12. Media search
13. Controls playback
14. Timeline

When the control menu is called up on the zero layer, the following functions are available:

- Controlling media playback
- Selecting tracks from the current playlist
- Selecting a playback list
- Media search
- Selecting a media source
- Creating favorites
- Configuring settings

ⓘ Further information on:
- Overview of the zero layer (→ page 423).
- Operating the zero layer (→ page 425).

Connecting the data storage medium to the multimedia system

Connecting USB devices

! **NOTE** Damage caused by high temperatures

High temperatures can damage USB devices.

▶ Remove the USB device after use and take it out of the vehicle.

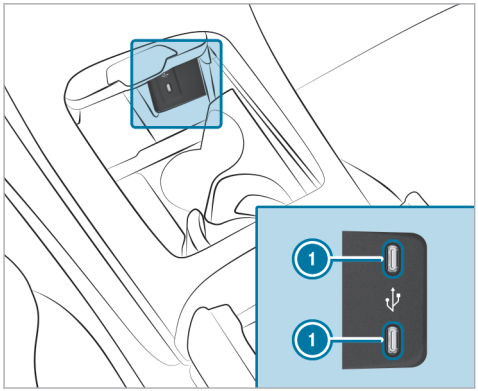

The multimedia connection unit is found in the center console storage compartment and has two type C USB ports (1). Depending on the vehicle equipment there are further USB ports in the storage compartment under the armrest and in the fold-open compartment in the rear passenger compartment.

▶ Connect the USB device to the USB port.

Searching for and authorizing a Bluetooth® audio device

Requirements:

- Bluetooth® is activated on the multimedia system and audio equipment.
- The audio equipment supports the Bluetooth® audio profiles A2DP and AVRCP.
- The audio equipment is "visible" for other devices.

Multimedia system:

→ [⌂] ▸▸ Media ▸▸ Bluetooth

Authorizing a new Bluetooth® audio device

▶ Select Connect device.
Detected equipment is displayed in the device list.

▶ Select an audio device.
Authorization starts. A code is displayed on the multimedia system and on the mobile phone.

▶ If the codes are identical, confirm on the audio equipment.

▶ Select No, Only for Music.
The Bluetooth® audio equipment is connected with the multimedia system.

Connecting previously authorized Bluetooth® audio equipment

▶ Select a Bluetooth® audio device from the list.
The connection is being established.

Starting media playback

Requirements:

- A data storage medium is connected to the multimedia system.

Multimedia system:

→ [⌂] ▸▸ Media

▶ Select a media source.

Controlling media playback

Multimedia system:

→ [⌂] ▸▸ Media

▶ **To pause playback:** select [⏸].

- **To continue playback:** select [▶].
- **To repeat a track:** select [↻].

  For the repeat function there are the following settings:
  - **Select once:** the active playlist is repeated.
  - **Select twice:** the current track is repeated.
  - **Select three times:** the repeat function is deactivated.
- **To play back tracks in random order:** select [⤮].
- **To rewind or fast-forward a track:** tap on the desired point on the timeline.
- **To select the next track:** select [⏭].
- **To select the previous track:** select [⏮].
- **To scroll through tracks quickly:** press and hold [⏮] or [⏭].
- **To show the current track list:** select [♫].

ⓘ You can also control media playback on the zero layer using the control menu displayed (→ page 423).

Additional options for setting media playback

Multimedia system:

→ [⌂] ▸▸ Media

Calling up additional options

- Select [•••].
  The additional options are shown.
- Select an option.

Media search

Notes about the search function in categories

Under [♫] you can search through all available media files. There are several categories available for selection. The categories shown depend on the connected device and data format.

ⓘ The categories are available as soon as the entire media content has been read in and analyzed.
Availability of the media search with Android devices may be limited.

Starting a search in categories

Multimedia system:

→ [⌂] ▸▸ Media ▸▸ [♫]

- Select a category.

Using the keyword search

Multimedia system:

→ [⌂] ▸▸ Media

You can look for content using the keyword search with free text input.

- Select [🔍].
  A keyboard for character entry appears.
- Enter the term searched for.

ⓘ The search begins with the first character entered. The more characters entered the more concrete the search results become.

- Select the desired entry from the result list.
  If a list with several tracks is selected, then this is opened in the search.

  To playback all of the tracks in the list, select [•••] and then Play Now.

Music online

Requirements

- There is an account for the music streaming service.
- A subscription for the music streaming service has been obtained.
- The data volume is available.

  Depending on the country, data volume may need to be purchased.
- A fast Internet connection for data transmission free of interference.

ⓘ The functions and services are country-dependent. For more information, consult an authorized Mercedes-Benz Center.

Multimedia system:

→ [⌂] ▸▸ Media

Adding a streaming provider the first time you start the application

▶ Select Online Music.
The overview of all supported streaming providers appears.

▶ Select a streaming provider.
A QR code is shown on the display.

▶ Scan the QR code with the mobile phone.

▶ Confirm the connection request on the mobile phone.

Adding more streaming providers

▶ Select Online Music.
The last active streaming provider is active.

▶ Select [⚙].

▶ Select Music Services.
The overview of all supported streaming providers appears.

▶ Select a streaming provider.
A QR code is shown on the display.

▶ Scan the QR code with the mobile phone.

▶ Confirm the connection request on the mobile phone.

Logging out from a streaming provider

▶ Select Online Music.
The last active streaming provider is active.

▶ Select [⚙].

▶ Select Music Services.
The overview of all supported streaming providers appears.

▶ [⚙] next to the streaming provider.

▶ Tap on Log Out.

Calling up music online

Multimedia system:

→ [⌂] ▸▸ Media

▶ Select Online Music.

Music playback can be controlled with the Touch Control or by using the media application.

Searching for music in online music

Multimedia system:

→ [⌂] ▸▸ Media ▸▸ Online Music

Searching for categories in online music

The media content of the streaming provider can be scanned through in the category search. The available categories and the symbol for the category search depend on the streaming provider.

▶ Start the category search.
The list of available categories appears.

▶ Select a category.

Keyword search in online music

You can look for content using the keyword search with free text input.

▶ Select [🔍].
A keyboard for character entry appears.

▶ Enter the term searched for.

ⓘ The more characters entered when using the keyword search, the more concrete the search results are.

▶ Select the desired entry from the result list. Depending on the selected hit, playback is started or a lower level in the search is opened.

Calling up online music settings

Multimedia system:

→ [⌂] ▸▸ Media ▸▸ Online Music

▶ Select [⚙].

▶ Select Music Services.

▶ Select [⚙] next to a streaming provider.

▶ Select a setting.

ⓘ Information about the linked accounts can be displayed using the [⚙] gear icon next to the configured streaming provider. The available information depends on what is offered by the provider of the streaming service.

Radio

Switching on the radio

Multimedia system:

→ [⌂] ▸▸ [♪] Radio

▶ Start the application on the multimedia system home screen.
The radio menu appears. You will hear the last station played on the last frequency band selected.

Radio overview

1. Station logo
2. Active frequency band
3. Station name or set frequency
4. Settings
5. Sound settings
6. Switches HD Radio™ on/off

⑦ Station list
⑧ Search

ⓘ The availability of the frequency bands is dependent on the equipment.

When the control menu is called up on the zero layer, the following functions are available:

- Selecting a radio station
- Setting radio stations from the station list
- Storing radio stations
- Frequency band
- Search function
- Creating favorites
- Configuring settings

ⓘ Further information on:
- Overview of the zero layer (→ page 423).
- Operating the zero layer (→ page 425).

You can watch an animation on this topic via the following link:

Switching the HD Radio™ function on/off

Multimedia system:

Radio

▶ Select AM or FM.

ⓘ HD Radio Technology manufactured under license from iBiquity Digital Corporation. U.S. and Foreign Patents. For patents see DTS website. HD Radio and the HD, HD Radio, and "ARC" logos are registered trademarks or trademarks of iBiquity Digital Corporation in the United States and/or other countries.

Setting the frequency band

Multimedia system:

Radio

The following frequency bands are available:

- AM
- FM
- SiriusXM

▶ Select a frequency band or a favorite.

Selecting a radio station

Multimedia system:

Radio

▶ Swipe to the left or right on the control element or select a radio station.

ⓘ You can also set the previous/next radio station on the zero layer using the control menu displayed (→ page 423).

Calling up the radio station list

Multimedia system:

[⌂] ▸▸ [♪] Radio

▶ Select [☰].
The station list appears.

▶ Swipe the station list up or down.

▶ Select a station.

Searching for radio stations using station names or frequency entry

Multimedia system:

[⌂] ▸▸ [♪] Radio

▶ Select [🔍].

▶ Enter a station name or frequency.

▶ Select a station.

Selecting a recommended radio station

Requirements:

- The Allow Music Suggestions option is switched on (⟶ page 448).
- The multimedia system has gathered sufficient data in order to show station suggestions.

Multimedia system:

[⌂] ▸▸ [♪] Radio

▶ Select [🔍].
The recommended stations are shown.

▶ Select a suggested station.
The selected station is played.

Storing radio stations

Multimedia system:

[⌂] ▸▸ [♪] Radio

▶ Select a radio station.

▶ Select [☆].

Managing favorites

Multimedia system:

[⌂] ▸▸ [♪] Radio ▸▸ Favorites

Moving stations

▶ Press [☰★].
The list of favorites appears.

▶ Press [•••] to the far right of the station name.

▶ Select Move.

▶ Move the station to the new position.

Displaying emergency warnings

Multimedia system:

[⌂] ▸▸ [♪] Radio ▸▸ [⚙]

ⓘ The availability of the function is dependent on the country.

▶ Switch Emergency Warnings on or off.

Displaying radio text

Multimedia system:

Radio ▸▸ ⚙ ▸▸ Active frequency band

▶ Activate or deactivate Radio Text Information.

Showing or hiding lyrics

ⓘ The function is equipment-dependent.

Multimedia system:

Radio ▸▸ •••

Showing lyrics

▶ Select Show lyrics.
The lyrics, album cover, title and artist of the song currently playing on the radio are displayed.

Swipe up or down to go to the bottom or top section of the lyrics.

If no lyrics are available for the song currently playing on the radio, Show lyrics is grayed out.

Hiding lyrics

▶ Select the cross at the top of the lyrics display.

or

▶ Select ↩.
The radio menu appears.

Satellite radio

Information on the satellite radio

SIRIUS XM® satellite radio offers more than 175 digital-quality radio channels providing 100% commercial-free music, sports, news and entertainment, for example. SIRIUS XM satellite radio employs a fleet of high-performance satellites to broadcast around the clock throughout the USA and Canada. The satellite radio program is available for a monthly fee. Information about this can be obtained from a Sirius XM® Service Center and at https://www.siriusxm.com (USA) or https://www.siriusxm.ca (Canada).

ⓘ Sirius, XM and all related marks and logos are trademarks of Sirius XM Radio Inc. and its subsidiaries. All other marks, channel names and logos are the property of their respective owners. All rights reserved.

Satellite radio restrictions

Satellite radio mode may be temporarily unavailable or interrupted for a variety of reasons. These include environmental or topographical conditions beyond the control of Mercedes-Benz USA, LLC. Thus, operation at certain locations may not be possible.

Setting up satellite radio

Requirements:

- Satellite radio equipment is available.
- Registration with a satellite radio provider has been completed.
- If registration is not included when purchasing the system, your credit card details will be required to activate your account.

Multimedia system:

→ [⌂] ▸▸ [i] Radio ▸▸ SiriusXM ▸▸ [⚙]

▶ Select Service Information.
The service information screen appears showing the radio ID and the current subscription status.

▶ Establish a telephone connection.

▶ Follow the service staff's instructions.
The activation process may take up to ten minutes.

ⓘ You can also have the satellite service activated online. To do so, please visit https://www.siriusxm.com (USA) or https://www.siriusxm.ca (Canada).

Switching on satellite radio

Multimedia system:

→ [⌂] ▸▸ [i] Radio

▶ Select SiriusXM.

Overview of the satellite radio

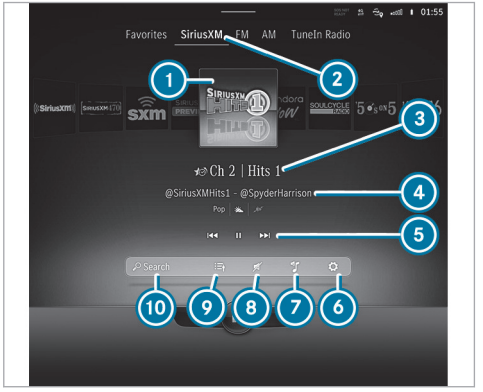

1. Logo or album art (if available)
2. Active frequency band
3. Channel name
4. Additional information provided by the station
5. Controls playback
6. Settings
7. Sound settings
8. Mutes volume
9. Station list
10. Search

Selecting a satellite radio category

Multimedia system:

→ [⌂] ▸▸ [i] Radio ▸▸ SiriusXM

▶ Select [☰].

▶ Select Category.

▶ Select a category.

Selecting a satellite radio channel

Multimedia system:

→ [⌂] ▸▸ [i] Radio ▸▸ SiriusXM

▶ Select [☰].

▶ Select a channel.

Saving or deleting a satellite radio channel

Multimedia system:

→ [⌂] ▸▸ [i] Radio ▸▸ SiriusXM

Storing the current channel

▶ Select [☆].

Moving a channel

- Press [☰★].
  The list of favorites appears.
- Press [⋮] next to the station name.
- Move the station to the new position.

Deleting the current channel

- Press [★].

Setting parental control for radio

Multimedia system:

→ [⌂] ▸▸ [♪] Radio ▸▸ SiriusXM ▸▸ [⚙]

- Select Parental Control.
- Determine a four-digit character sequence and select [ok].
  All channels with adult content are locked.

Unlocking a channel

- Enter the four-digit character sequence and select [ok].
  All channels with adult content are unlocked.

Music and sport alerts function

This function enables you to program an alert for your favorite artists, tracks or sporting events. Music alerts can be saved whilst a track is being played and sport alerts can be saved during a live game. You can also specify sport alerts via the menu option. The system then continuously searches through all the channels. If a match is found with a stored alert, you will be informed.

Setting music and sport alerts

Multimedia system:

→ [⌂] ▸▸ [♪] Radio ▸▸ SiriusXM ▸▸ [⚙] ▸▸ Alerts

Activating messages for a category

- Select a category and activate [◉].

Adding messages for a category

- Select a category and add a message [+].
- Select Artist Alerts or Song Alerts in the dialog window.
  The message is set for the activated [☑] track and artist. If a match is found, a prompt appears asking whether you wish to change to the station.

Deleting messages in a category

- Select a category, mark the desired messages and delete [🗑].

or

- Do not mark any messages and delete all entries [🗑].

Information about Smart Favorites and TuneStart

From the station presets you can set up to eight stations as Smart Favorites. Smart Favorites stations are automatically saved to temporary storage in the background. If you change to a Smart Favorites station, you can replay, pause or actively skip forward or back to broadcasts which you have missed. If Tune Start is activated and you change to another Smart Favorites station, the music track currently playing on the station is automatically restarted from the beginning of the track.

Adding a channel to Smart Favorites

Multimedia system:

→ [⌂] ▸▸ [i] Radio ▸▸ SiriusXM

- Press and hold on the station logo until the options appear.
- **To add a channel:** select Add to Smart Favorites in the menu.
- **To remove a channel:** select Delete from Smart Favorites in the menu.

Activating/deactivating TuneStart

Multimedia system:

→ [⌂] ▸▸ [i] Radio ▸▸ SiriusXM ▸▸ [⚙]

- Select General.
- Switch TuneStart on or off.

Displaying satellite radio service information

Multimedia system:

→ [⌂] ▸▸ [i] Radio ▸▸ SiriusXM ▸▸ [⚙]

- Select General.
- Select Service Information.

Sound

Sound settings

Information about the sound system

The sound system has a total output of 125 W and is equipped with five speakers. It is available for all functions in the radio and media modes.

ⓘ The call can also be made from other audio sources. Replace Media with, for example, Radio in the menu path.

Calling up the sound menu

Multimedia system:

→ [⌂] ▸▸ Media ▸▸ [⚙]

- Select one of the functions shown to make settings.

Adjusting treble, mid-range and bass settings

Multimedia system:

→ [⌂] ▸▸ Media ▸▸ [⚙]

- Set Treble, Mid or Bass.

Switching loudness normalization on or off

Multimedia system:

→ [⌂] ▸▸ Media ▸▸ [⚙] ▸▸ Loudness Normalization

The function compensates for differing loudness when changing between audio sources and within an audio source. Several levels are available for this purpose. The currently set level is displayed.

The loudness normalization can also be switched off.

- Switch on one level.

or

- Switch off the loudness normalization.

Setting the balance and fader

Multimedia system:

→ [⌂] ▸▸ Media ▸▸ [⚙] ▸▸ Balance and Fader

Adjusting the balance

▶ Set the volume distribution between the right and left speakers in the vehicle in the grid shown.
The volume is distributed between the right and left-hand speakers.

Adjusting the fader

▶ Set the volume distribution between the front and rear speakers in the vehicle in the grid shown.
The volume is distributed between the front and rear speakers.

Burmester® 3D surround sound system

Information on the Burmester® 3D surround sound system

The Burmester® 3D surround sound system has a total output of 710 W and is equipped with 15 speakers. It is available for all functions in the radio and media modes.

ⓘ The call can also be made from other audio sources. Replace Media with, for example, Radio in the menu path.

Calling up the sound menu on the Burmester® 3D surround sound system

Multimedia system:

→ [⌂] ▸▸ Media ▸▸ [⚙]

▶ Select one of the functions shown to make settings.

Adjusting the treble, mid and bass settings on the Burmester® 3D surround sound system

Multimedia system:

→ [⌂] ▸▸ Media ▸▸ [⚙] ▸▸ Equalizer

▶ Set Treble, Mid or Bass.

Switching loudness normalization on the Burmester® 3D surround sound system on or off

Multimedia system:

→ [⌂] ▸▸ Media ▸▸ [⚙] ▸▸ Equalizer ▸▸ Loudness Normalization

The function compensates for differing loudness when changing between audio sources and within an audio source. Several levels are available for this purpose. The currently set level is displayed.

Loudness normalization can also be switched off.

▶ Switch on one level.

or

▶ Switch off loudness normalization.

Adjusting the balance and fader on the Burmester® 3D surround sound system

Multimedia system:

→ [⌂] ▸▸ Media ▸▸ [⚙] ▸▸ Balance and Fader

Adjusting the balance

▶ Move the volume distribution between the right and left sides of the vehicle in the grid shown.
The volume is distributed between the speakers on the left and right sides in the vehicle.

Adjusting the fader

▶ Move the volume distribution between the front and rear of the vehicle in the grid shown.
The volume is distributed between the speakers in the front and rear of the vehicle.

ⓘ Setting 0 is recommended for high quality music and voice reproduction.

Selecting a sound profile in the Burmester® 3D surround sound system

Multimedia system:

→ [⌂] ▸▸ Media ▸▸ [⚙]

Setting an existing sound profile

▶ Select a sound profile.

Setting up a personal sound profile

▶ Select Personal Sound Profile and [⚙].

▶ Select Reconfigure.

▶ Restart the set-up assistant.

Setting up a personal sound profile for the first time:

▶ Select Personal Sound Profile.

▶ Open the set-up assistant with Start.

▶ Observe the messages on the display and select the preferred settings.
The personal sound profile is created with the selected settings and can be selected in the Sound Profiles menu.

Changing individual settings of the personal sound profile at a later date:

▶ Select Personal Sound Profile and [⚙].

▶ Change the desired settings.

ⓘ The availability of a Personal Sound Profile is dependent on the equipment.
The set-up assistant is available when the vehicle is stationary.

Adjusting the sound focus on the Burmester® 3D surround sound system

Multimedia system:

→ [⌂] ▸▸ Media ▸▸ [⚙] ▸▸ Sound Focus

▶ Select a seat or seat row for the sound focus.
The sound focus is activated.

or

▶ Select the seat or seat row again.
The sound focus is deactivated.

Advanced sound system

Information about the Advanced sound system

The Advanced sound system has a total output of 225 W and is equipped with nine speakers. It is available for all functions in the radio and media modes.

ⓘ The call can also be made from other audio sources. Replace Media with, for example, Radio in the menu path.

Calling up the sound menu in the Advanced sound system

Multimedia system:

⟶ [⌂] ▸▸ Media ▸▸ [⚙]

Adjusting sound settings

▶ Select one of the functions shown.

Adjusting treble, mid-range and bass settings in the Advanced sound system

Multimedia system:

⟶ [⌂] ▸▸ Media ▸▸ [⚙]

▶ Set Treble, Mid or Bass.

Switching loudness normalization in the Advanced sound system on or off

Multimedia system:

⟶ [⌂] ▸▸ Media ▸▸ [⚙] ▸▸ Equalizer ▸▸ Loudness Normalization

Switching off the loudness normalization

▶ Switch on one level.

or

▶ Switch off the loudness normalization.

Setting the balance/fader in the Advanced sound system

Multimedia system:

⟶ [⌂] ▸▸ Media ▸▸ [⚙] ▸▸ Balance and Fader

Adjusting the balance

▶ Move the volume distribution between the right and left sides of the vehicle in the grid shown.
The volume is distributed between the speakers on the left and right sides in the vehicle.

Adjusting the fader

▶ Move the volume distribution between the front and rear of the vehicle in the grid shown.
The volume is distributed between the speakers in the front and rear of the vehicle.

ASSYST PLUS service interval display

Function of the ASSYST PLUS service interval display

The ASSYST PLUS service interval display on the driver's display provides information on the remaining time or distance before the next service due date.

You can hide this service display using the back button on the steering wheel.

Depending on how the vehicle is used, the ASSYST PLUS service interval display may shorten the service interval, e.g. in the following cases:

- Mainly short-distance driving
- When the engine is often left idling for long periods
- In the event of frequent cold start phases

Mercedes-Benz recommends avoiding such operating conditions.

You can obtain information concerning the servicing of your vehicle from a qualified specialist workshop, e.g. an authorized Mercedes-Benz Center.

Displaying the service due date

Driver display:

→ Service

The next service due date is displayed.

▶ **To exit the display:** press the back button on the steering wheel.

Information on regular maintenance work

! **NOTE** Premature wear through failure to observe service due dates

Maintenance work which is not carried out at the right time or incompletely can lead to increased wear and damage to the vehicle.

▶ Adhere to the prescribed service intervals.

▶ Always have the prescribed maintenance work carried out at a qualified specialist workshop.

Notes on special service requirements

The prescribed service interval is based on normal operation of the vehicle. Have the maintenance work carried out more often than prescribed if operating conditions are difficult or the vehicle is subject to increased stress.

The ASSYST PLUS service interval display is only an aid. It is the responsibility of the driver of the vehicle to have maintenance work carried out more often than prescribed due to actual operating conditions and/or stresses.

Examples of arduous operating conditions:

- Regular city driving with frequent intermediate stops
- Mainly short-distance driving
- Frequent operation in mountainous terrain or on poor road surfaces
- When the engine is often left idling for long periods
- Operation in particularly dusty conditions and/or if air-recirculation mode is frequently used

In these or similar operating conditions, have the interior air filter, air filter, engine oil and oil filter, for example, changed more frequently. If subject to increased stress, check the tires more. Further information can be obtained at a qualified specialist workshop.

Battery disconnection periods

The ASSYST PLUS service interval display can calculate the service due date only when the battery is connected.

▶ Display and note down the service due date on the driver's display before disconnecting the battery (→ page 556).

Maintenance Management

Notes about Maintenance Management

If the Maintenance Management service is activated, relevant data is automatically transferred to the Mercedes-Benz customer center.

The customer center transmits the data to the service partner that you have entered on the Mercedes me website at: http://www.mercedes.me. You will then receive individual recommendations regarding the maintenance of your vehicle.

ⓘ The calculation of the optimal transmission time of the maintenance request to the service partner is subject to technical limitations that may cause the maintenance recommendation to be perceived as too early or too late or not to be made at all. In this case, you can conveniently arrange a maintenance appointment with the customer center via the maintenance reminder in the multimedia system.

ⓘ Maintenance Management and the maintenance reminder in the multimedia system are not available in every country. Contact an authorized Mercedes-Benz Center to find out whether this function is available in your country.

Data transferred when using Maintenance Management

When the service is activated, relevant data is automatically transferred to determine the required scope of maintenance as well as malfunction detection and malfunction rectification.

Details on data transfer can be found in the data protection information for the Mercedes me connect services. These can be found at: https://www.mercedes.me under "My Mercedes me account", "Terms of use".

ⓘ Maintenance Management and the maintenance reminder in the multimedia system are not available in every country.

Telediagnosis

Notes about Telediagnosis

ⓘ This service is not available in all countries.

The vehicle can detect if certain wear parts need to be replaced or if malfunctions have occurred in vehicle systems. If the Telediagnosis service is activated, relevant data is automatically transmit-

ted to the manufacturer. If fault conditions are detected by the vehicle system self-diagnosis, the system transmits recommendations for action to the Mercedes-Benz customer center depending on the fault detected. The customer center transmits the data to the service partner that you have entered on the Mercedes me website at: http://www.mercedes.me.

For selected faults, the notification that a malfunction has been detected may appear in the multimedia system with a request to contact the Mercedes-Benz customer center. From this message, a call can be made directly to the customer center for assistance.

ⓘ The transmission of a notification to the multimedia system depends on the country, vehicle model and equipment and requires a fast data connection, over which the service provider has no influence.

ⓘ Reliable fault detection is subject to technical limitations. Therefore, only a limited selection of faults can be detected and recommendations for action transmitted to the customer center and the service partners. Mercedes-Benz AG is continuously working on the expansion of this service. The fault detection depends on the country, vehicle model and equipment.

Data transferred when using Telediagnostics

When the service is activated, relevant data is automatically transferred to determine the required scope of maintenance as well as malfunction detection and malfunction rectification.

Details on data transfer can be found in the data protection information for the Mercedes me connect services. These can be found at: https://www.mercedes.me under "My Mercedes me account", "Terms of use".

ⓘ The scope of the transmitted data depends on the vehicle model and its equipment. For technical reasons, not all data is available at all times.

Engine compartment

Opening and closing the hood

⚠ **DANGER** Risk of fatal injuries when carrying out maintenance work during the charging process

During the charging process, the high-voltage on-board electrical system is under high voltage.

▶ Do not perform any maintenance work during the charging process.

⚠ **WARNING** Risk of accident due to driving with the hood unlocked

The hood may open and block your view.

▶ Never release the hood when driving.

▶ Before every trip, ensure that the hood is locked.

WARNING Risk of accident and injury when opening and closing the hood

The hood may suddenly drop into the end position.

There is a risk of injury for anyone in the hood's range of movement.

▶ Do not open or close the hood if there is a person in the hood's range of movement.

WARNING Risk of burns when opening the hood

If you open the hood in the event of an overheated engine or fire in the engine compartment, the following situations may occur:

- You may come into contact with hot gases.
- You may come into contact with other escaping hot operating fluids.

▶ Before opening the hood, allow the engine to cool down.

▶ In the event of a fire in the engine compartment, keep the hood closed and call the fire service.

WARNING Risk of injury due to moving parts

Components in the engine compartment may continue to run or start unexpectedly even when the drive system is switched off.

Observe the following if you must open the hood:

▶ Switch off the vehicle.

▶ Never touch the danger zones surrounding moving components, e.g. the rotation area of the fan.

▶ Remove jewelery and watches.

▶ Keep items of clothing and hair away from moving parts.

WARNING Risk of injury from touching live components

The ignition system and the fuel injection system operate with a high voltage. You could receive an electric shock.

▶ Never touch components of the ignition system or fuel injection system when the vehicle is switched on.

The live components include the following, for example:

- Ignition coils
- Fuel injectors
- Electric lines to the ignition coils and the fuel injectors

WARNING Risk of burns from hot component parts in the engine compartment

Certain component parts in the engine compartment can be very hot, e.g. the engine, the cooler and parts of the exhaust system.

▶ Allow the engine to cool down and only touch component parts described in the following.

WARNING Risk of injury from using the windshield wipers when the hood is open

If the windshield wipers start moving when the hood is open, you could be trapped by the wiper linkage.

▶ Always switch off the windshield wipers and the vehicle first if you need to open the hood.

Opening the hood

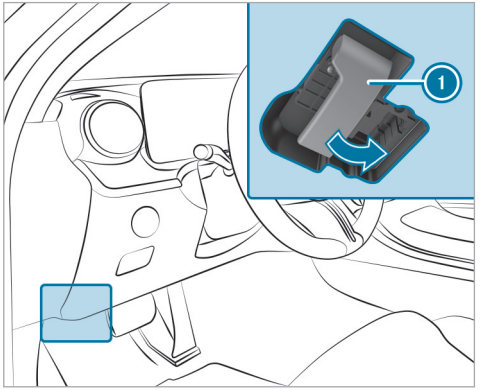

▶ To release the hood, pull on handle 1.

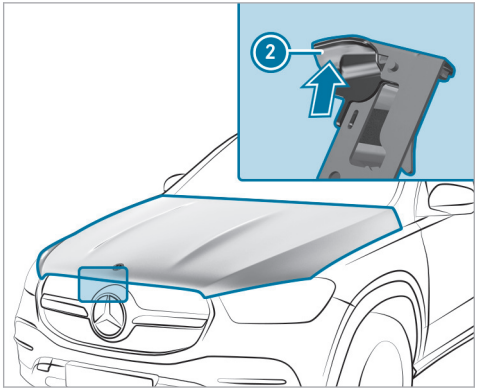

▶ Push handle 2 of the hood catch upwards and lift the hood until it opens automatically.

Closing the hood

NOTE Damage to the hood due to pressing the hood closed with your hand

If the hood is closed manually, there is a risk of dents.

▶ Do not close the hood manually.

▶ Lower the hood to a height of around 12 in (30 cm) and then allow it to fall, applying a little force as you let it go.

▶ If the hood can still be lifted slightly, open the hood again and close it with a little more force until it engages correctly.

Engine oil

Checking the engine oil level using the driver's display

Requirements

- The engine has been warmed up.
- The vehicle is parked on a level surface.
- The engine is running at idle speed.
- The hood is closed.

Determining the engine oil level can take up to 30 minutes with a normal driving style and even longer with an active driving style.

Driver's display:

→ Service

The engine oil level is shown.

One of the following messages will appear on the driver's display:

- Engine Oil Level Measuring Now...: the engine oil level cannot be determined yet.

▶ Repeat the request after a maximum of 30 minutes' driving.

- Engine Oil Level OK and the bar display for indicating the engine oil level on the driver's display is green and is between "min" and "max": the engine oil level is correct.
- Engine Oil Level Refill 1,0 liq.gal. and the bar display for indicating the engine oil level on the driver's display is yellow and is below "min":

▶ Add 1.1 US qt (1 l) of engine oil.

- Engine Oil Level Reduce and the bar display for indicating the engine oil level on the driver's display is yellow and is above "max":

▶ Drain off any excess engine oil that has been added. To do so, consult a qualified specialist workshop.

- For Engine Oil Level Switch on Vehicle

▶ Switch on the vehicle to check the engine oil level.

- Engine Oil Level System Inoperative: The oil level sensor is defective or not connected.

▶ Consult a qualified specialist workshop.

- Engine Oil Level System Currently Unavailable

▶ Close the hood.

Topping up engine oil

⚠ **DANGER** Risk of fatal injuries when carrying out maintenance work during the charging process

During the charging process, the high-voltage on-board electrical system is under high voltage.

▶ Do not perform any maintenance work during the charging process.

⚠ WARNING Risk of burns when opening the hood

If you open the hood in the event of an overheated engine or fire in the engine compartment, the following situations may occur:

- You may come into contact with hot gases.
- You may come into contact with other escaping hot operating fluids.

▶ Before opening the hood, allow the engine to cool down.

▶ In the event of a fire in the engine compartment, keep the hood closed and call the fire service.

⚠ WARNING Risk of injury due to moving parts

Components in the engine compartment may continue to run or start unexpectedly even when the drive system is switched off.

Observe the following if you must open the hood:

▶ Switch off the vehicle.

▶ Never touch the danger zones surrounding moving components, e.g. the rotation area of the fan.

▶ Remove jewelery and watches.

▶ Keep items of clothing and hair away from moving parts.

⚠ WARNING Risk of burns from hot component parts in the engine compartment

Certain component parts in the engine compartment can be very hot, e.g. the engine, the cooler and parts of the exhaust system.

▶ Allow the engine to cool down and only touch component parts described in the following.

⚠ WARNING Risk of fire and injury from engine oil

If engine oil comes into contact with hot component parts in the engine compartment, it may ignite.

▶ Make sure that no engine oil is spilled next to the filler opening.

▶ Allow the engine to cool off and thoroughly clean the engine oil from component parts before starting the vehicle.

! NOTE Engine damage caused by an incorrect oil filter, incorrect oil or additives

▶ Do not use engine oils or oil filters which do not correspond to the specifications explicitly prescribed for the service intervals.

▶ Follow the instructions on the service interval display for changing the engine oil and observe the prescribed change intervals.

▶ Do not use additives.

NOTE Damage caused by adding too much engine oil

Excessive engine oil can damage the engine or the catalytic converter.

▶ Have excess engine oil removed in a qualified specialist workshop.

ⓘ Depending on driving style, the vehicle consumes up to 0.9 US qt (0.8 liters) of oil per 600 miles (1,000 km). The oil consumption may also be higher than this when the vehicle is new or if you frequently drive at high engine speeds.

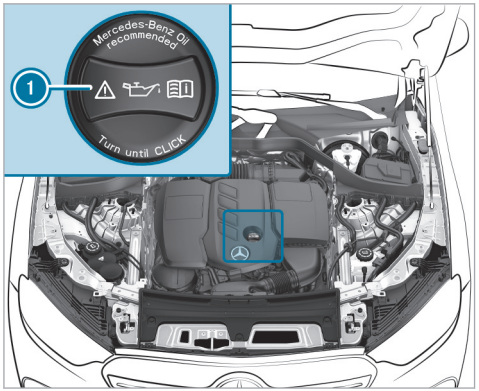

▶ Turn cap ① counter-clockwise and remove it.

▶ Add engine oil.

▶ Replace cap ① and turn it clockwise until it engages.

▶ Check the oil level again (→ page 29).

Checking the coolant level

DANGER Risk of fatal injuries when carrying out maintenance work during the charging process

During the charging process, the high-voltage on-board electrical system is under high voltage.

▶ Do not perform any maintenance work during the charging process.

WARNING Risk of burns when opening the hood

If you open the hood in the event of an overheated engine or fire in the engine compartment, the following situations may occur:

- You may come into contact with hot gases.
- You may come into contact with other escaping hot operating fluids.

▶ Before opening the hood, allow the engine to cool down.

- In the event of a fire in the engine compartment, keep the hood closed and call the fire service.

WARNING Risk of injury due to moving parts

Components in the engine compartment may continue to run or start unexpectedly even when the drive system is switched off.

Observe the following if you must open the hood:

- Switch off the vehicle.
- Never touch the danger zones surrounding moving components, e.g. the rotation area of the fan.
- Remove jewelery and watches.
- Keep items of clothing and hair away from moving parts.

WARNING Risk of burns from hot component parts in the engine compartment

Certain component parts in the engine compartment can be very hot, e.g. the engine, the cooler and parts of the exhaust system.

- Allow the engine to cool down and only touch component parts described in the following.

WARNING Risk of scalding from hot coolant

If you open the cap, you could scald yourself.

- Allow the engine to cool down before opening the cap.
- When opening the cap, wear protective gloves and safety glasses.
- Open the cap slowly to release pressure.

- Have the coolant checked or refilled only at a qualified specialist workshop.

Refilling the windshield washer system

DANGER Risk of fatal injuries when carrying out maintenance work during the charging process

During the charging process, the high-voltage on-board electrical system is under high voltage.

- Do not perform any maintenance work during the charging process.

WARNING Risk of burns when opening the hood

If you open the hood in the event of an overheated engine or fire in the engine compartment, the following situations may occur:

- You may come into contact with hot gases.
- You may come into contact with other escaping hot operating fluids.

- Before opening the hood, allow the engine to cool down.

- In the event of a fire in the engine compartment, keep the hood closed and call the fire service.

WARNING Risk of injury due to moving parts

Components in the engine compartment may continue to run or start unexpectedly even when the drive system is switched off.

Observe the following if you must open the hood:

- Switch off the vehicle.
- Never touch the danger zones surrounding moving components, e.g. the rotation area of the fan.
- Remove jewelery and watches.
- Keep items of clothing and hair away from moving parts.

WARNING Risk of burns from hot component parts in the engine compartment

Certain component parts in the engine compartment can be very hot, e.g. the engine, the cooler and parts of the exhaust system.

- Allow the engine to cool down and only touch component parts described in the following.

WARNING - Risk of fire and injury from windshield washer concentrate

Windshield washer concentrate is highly flammable. It could ignite if it comes into contact with hot engine component parts or the exhaust system.

- Make sure that no windshield washer concentrate spills out next to the filler opening.

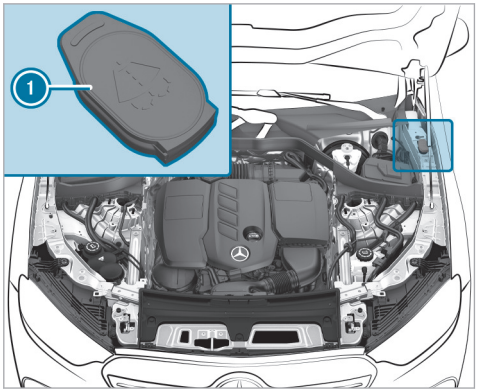

- Open cap 1 by the tab.
- Add washer fluid.

Keeping the air/water duct free

- Keep the area between the hood and the windshield free of deposits, e.g. ice, snow or leaves.

Cleaning and care

Information on washing the vehicle in a car wash

⚠ **WARNING** Risk of accident due to reduced braking effect after washing the vehicle

The braking effect is reduced after washing the vehicle.

▶ After the vehicle has been washed, brake carefully while paying attention to the traffic conditions until the braking effect has been fully restored.

! **NOTE** Damage from automatic braking

If one of the following functions is activated, the vehicle will brake automatically in certain situations:

- Active Brake Assist
- Active Distance Assist DISTRONIC
- HOLD function
- Active Parking Assist

To avoid damage to the vehicle, switch off these systems, e.g. when towing or using a car wash.

! **NOTE** Damage due to unsuitable car wash

▶ Before driving into a car wash make sure that the car wash is suitable for the vehicle dimensions.

▶ Ensure there is sufficient ground clearance between the underbody and the guide rails of the car wash.

▶ Ensure that the clearance width of the car wash, in particular the width of the guide rails, is sufficient.

To avoid damage to your vehicle when using a car wash, ensure the following beforehand:

- Active Distance Assist DISTRONIC is deactivated.
- The HOLD function is switched off.
- The 360° camera or the reversing camera is off.
- The side windows and sliding sunroof are completely closed.
- The outside mirrors are folded in.
- The blower for the ventilation and heating is switched off.
- The windshield wiper switch is in position [0].
- The key is at least 10 ft (3 m) away from the vehicle. Otherwise the tailgate could open unintentionally.
- For car washes with conveyor system:
  - Neutral [N] is engaged.
  - If you would like to leave the vehicle while it is being washed, make sure the key is in the vehicle. The park position [P] is otherwise automatically engaged.

ⓘ Removing the wax from the windshield and wiper rubbers after a car wash will prevent smearing and reduce wiper noise.

Car wash mode

In car wash mode, the vehicle is prepared for driving into an automatic car wash. Car wash mode

can be activated up to a speed of 12 mph (20 km/h) (→ page 567).

When car wash mode is activated, the Automatic Car Wash Mode Active message will appear on the driver display. The following adjustments will be made:

- The outside mirrors will be folded in.
- To prevent the windshield washer system from starting up automatically, the rain sensor will be deactivated.
- Air-recirculation mode will be activated.
- The rear passenger compartment window wiper will be deactivated.
- Parking Assist PARKTRONIC will be deactivated.
- Active Brake Assist will be deactivated, if applicable.
- **Vehicles with 360° camera:** the front image will be activated after approximately eight seconds.
- **Vehicles with HANDS-FREE ACCESS:** kick detection will be deactivated.

If one of the settings cannot be selected, this will be indicated by a [X] after the respective setting.

Pressing Switch Off will cancel car wash mode. Car wash mode will automatically be deactivated above a speed of 12 mph (20 km/h).

You can also switch off car wash mode via the MBUX multimedia system (→ page 567).

The following settings will be reset when car wash mode is deactivated:

- The outside mirrors will be folded out.
- The rain sensor will be activated.
- Air-recirculation mode will be deactivated.
- The rear passenger compartment window wiper will be activated.
- Parking Assist PARKTRONIC will be reset to the previously selected setting.
- Active Brake Assist will be activated, if applicable.
- **Vehicles with 360° camera:** the front image will be deactivated at speeds above 11 mph (18 km/h).
- **Vehicles with HANDS-FREE ACCESS:** kick detection will be activated.

Switching car wash mode on/off

Requirements

- The vehicle is stationary.
- The vehicle is switched on.

Multimedia system:

→ [⌂] ▸▸ Settings ▸▸ Vehicle ▸▸ Driving

Activate car wash mode

▶ Select Automatic Car Wash Mode.

▶ Select Activate.

If one of the settings cannot be selected, this will be shown by a [X] next to the respective setting.

ⓘ For an overview of the settings configured when you activate car wash mode (→ page 566).

Deactivating car wash mode

▶ Select Switch Off.
The settings of car wash mode will be reverted.

ⓘ Car wash mode will automatically be deactivated as soon as the speed exceeds 12 mph (20 km/h).

Notes on using a power washer

⚠ WARNING Risk of an accident when using power washers with round-spray nozzles

The water jet can cause externally invisible damage.

Components damaged in this way may unexpectedly fail.

▶ Do not use a power washer with round-spray nozzles.

▶ Have damaged tires or chassis parts replaced immediately.

To avoid damage to your vehicle, observe the following when using a power washer:

- The key is at least 10 ft (3 m) away from the vehicle. Otherwise the tailgate could open unintentionally.
- Maintain a distance of at least 11.8 in (30 cm) to the vehicle.
- **Vehicles with decorative car film:** Parts of your vehicle are wrapped with a decorative car film. Maintain a distance of at least 27.6 in (70 cm) between the film-wrapped parts of the vehicle and the nozzle of the power washer. Move the nozzle of the power washer around while cleaning. The water temperature of the power washer must not exceed 140 °F (60 °C).
- Please observe the information on the correct distance in the equipment manufacturer's operating instructions.
- Do not direct the nozzle of the power washer directly at sensitive parts, e.g. tires, gaps, electrical components, batteries, lights or ventilation louvers.

Washing the vehicle by hand

! NOTE Engine damage due to water ingress

▶ Take care not to point the water jet directly towards the air inlet grille below the hood.

Observe the relevant legal requirements (e.g. in some countries, washing by hand is permitted only in specially designated wash bays).

▶ Use a mild cleaning agent (e.g. car shampoo).

▶ Do not use an acidic cleaning agent.

▶ Wash the vehicle with lukewarm water using a soft car sponge. When doing so, do not expose the vehicle to direct sunlight.

▶ Carefully hose the vehicle off with water and dry using a chamois.

ⓘ Observe the notes on the care of car parts (→ page 570).

Notes on paintwork/matte finish paintwork care

To avoid damaging the paintwork and interfering with the driving assistance systems, please observe the following notes:

Paint

- Insect remains: soak with insect remover and rinse off the treated areas afterwards.
- Bird droppings: soak with water and rinse off afterwards.
- Tree resin, oils, fuels and greases: remove by rubbing gently with a cloth soaked in petroleum ether or lighter fluid.
- Coolant and brake fluid: remove with a damp cloth and clean water.
- Tar stains: use tar remover.
- Wax: use silicone remover.
- Do not attach stickers, films or similar materials. Only have film attached to the bumper at a qualified specialist workshop.
- Remove dirt immediately, where possible. Do not use acidic solutions and acidic cleaning agents.

Matte finish

- Only use care products approved for Mercedes-Benz.
- Do not attach stickers, films or similar materials. Only have film attached to the bumper at a qualified specialist workshop.
- Do not polish the vehicle or the light-alloy wheels.
- Only use car washes that correspond to the latest engineering standards.
- Do not use a car wash program with a final hot wax treatment.
- Do not use paint cleaners, buffing or polishing products, gloss preservers, e.g. wax.

In the event of paintwork damage:

- Always have paintwork repairs carried out at a qualified specialist workshop.
- Make sure the radar sensors function (→ page 303).

Notes on cleaning decorative car films

Please observe the "Notes on paintwork/matt paintwork care“ (→ page 569). These notes also apply for matt decorative car films.

To avoid damage, please observe the notes on cleaning decorative car films.

Cleaning

- When cleaning with a power washer, maintain a minimum distance of 27.6 in (70 cm) between the film-covered parts of the vehicle and the nozzle of the power washer.
- To clean, use lots of water and a mild cleaning agent without additional or abrasive products, e.g. a car shampoo approved for Mercedes-Benz.
- Do not use any acidic cleaning agents.
- Remove dirt immediately, if possible. Avoid hard rubbing to avoid damaging the decorative car film irreparably.
- In case of dirt embedded in the surface or a dull decorative car film: use the 'Paint Cleaner' cleaning agent recommended and approved for Mercedes-Benz.

- Insect remains: Soak with insect remover and rinse off the treated areas afterwards.
- Bird droppings: Soak with water and rinse off afterwards.
- Dry vehicles covered with car film after every wash using a soft, absorbent cloth to prevent water stains.

Preventing damage to the decorative car film

- The durability and color of decorative car films are affected by:
  - Solar radiation
  - Temperature, e.g. heat gun
  - Weather
  - Stone chips and dirt
  - Chemical cleaning products
  - Products containing grease
- Do not use polishes on matt decorative car films. Polishing results in the film-covered surface developing a shine.
- Do not use wax on matt or structured decorative car films. This may result in permanent stains.

Scratches, corrosive deposits, etched areas and damage caused by inadequate care cannot always be completely repaired. In such cases, please contact a qualified specialist workshop.

For more information about special care and cleaning products, please contact the manufacturer.

Laminated surfaces may exhibit optical differences to surfaces which were not protected by a decorative film when the decorative film is removed.

ⓘ Have work or repairs on decorative car film carried out at a qualified specialist workshop, e.g. a Mercedes-Benz Service Center.

Notes on cleaning and care for vehicle parts

⚠ **WARNING** Risk of entrapment if the windshield wipers are switched on while the windshield is being cleaned

If the windshield wipers are set in motion while you are cleaning the windshield or wiper blades, you can be trapped by the wiper arm.

▶ Always switch off the windshield wipers and the vehicle before cleaning the windshield or wiper blades.

! **NOTE** Damage caused by acidic cleaning agents

▶ Do not use acidic cleaning agents. Otherwise, the surfaces could be damaged.

To avoid damage to the vehicle, observe the notes on cleaning and care for the following car parts:

Wheels and rims

- Use water and acid-free alloy wheel cleaners.
- Do not use acidic alloy wheel cleaners to remove brake dust. This could damage wheel bolts and brake components.
- To avoid corrosion of the brake discs and pads, drive the vehicle for a few minutes after cleaning before parking it. The brake discs and pads will warm up and dry off.

Windows

NOTE Damage to electronic components due to excess fluids

When cleaning the windows from the inside, fluids such as cleaning agents or water may run down and get behind trim parts of the vehicle interior and cause damage to electronic components.

▶ Use cleaning agents as sparingly as possible.

▶ Immediately absorb any excess fluids.

- Clean the windows inside and outside with a damp cloth and with a cleaning agent recommended for Mercedes-Benz.
- Do not use dry cloths or abrasive or solvent-based cleaning agents to clean the insides of windows.

ⓘ Clean the windshield thoroughly with cleaning agents recommended for Mercedes-Benz after changing the wiper blades or applying a wax treatment to the vehicle. Failure to observe these instructions for use may result in damage, grease marks or glaring spots.

ⓘ Remove any exterior condensation or dirt on the windshield in front of the multifunction camera. Driving systems and driving safety systems may otherwise be impaired or unavailable(→ page 303).

Wiper blades

- Move the wiper arms into the replacement position(→ page 27).
- Fold out the wiper arms and clean the wiper blades using a damp cloth.

ⓘ Please note that the wiper blades are coated. This coating may leave residue on a cloth. Do not rub the wiper blades excessively and do not clean them too frequently.

Exterior lighting

- Clean the lenses with a wet sponge and a mild cleaning agent, e.g. car shampoo.
- Use only cleaning agents or cleaning cloths that are suitable for plastic lenses.

Vehicle socket (high-voltage battery)

- Use clean water and a soft cloth to clean the vehicle socket.
- Do not use power washers or cleaning agents such as soap.

Sensors

- Clean the sensors in the front and rear end of the vehicle with car shampoo, plenty of water and a soft cloth (→ page 303).
- When using a power washer, maintain a minimum distance of 11.8 in (30 cm).

Running boards

- Use water and acid-free cleaning agents.
- Do not clean the aluminum insert of the running board with alkaline or acidic cleaning agents such as, e.g. wheel cleaners. Do not use acidic wheel cleaners to remove brake dust. The aluminum inserts may otherwise be damaged.

Cameras

- Open the camera cover via the multimedia system (→ page 366).

- Use a soft cloth and clean water to clean the camera lenses.
- Do not use a power washer.

ⓘ Remove any exterior condensation or dirt on the windshield in front of the multifunction camera. Driving systems and driving safety systems may otherwise be impaired or unavailable(→ page 303).

Trailer hitch

- Observe the care instructions in the operator's manual of the trailer hitch manufacturer.
- Do not clean the ball neck with a power washer or solvent.
- Remove any surface rust on the ball, e.g. with a wire brush.
- Remove the dirt with a lint-free cloth.
- After cleaning, lightly oil or grease the ball.

ⓘ Consult the operator's manual of the trailer hitch manufacturer before using trailers with a sway-control hitch.

Notes on care of the interior

⚠ **WARNING** Risk of injury from plastic parts breaking off after the use of solvent-based care products

Care and cleaning products containing solvents can cause surfaces in the cockpit to become porous. When the airbags are deployed, plastic parts may break away.

▶ Do not use any care or cleaning products containing solvents to clean the cockpit.

⚠ **WARNING** Risk of injury or fatal injuries from bleached seat belts

Bleaching or dyeing seat belts can severely weaken them.

This can, for example, cause seat belts to tear or fail in an accident.

▶ Never bleach or dye seat belts.

! **NOTE** Property damage due to disinfectants

The interior includes a number of sensitive surfaces such as displays, plastics and leather.

Disinfectants can contain alcohol and other substances that penetrate and damage surfaces. Technology behind buttons and displays can also be damaged.

▶ Do not use disinfectant on interior surfaces.

To avoid damage to the vehicle, observe the following notes on cleaning and care:

Seat belts

- Clean with lukewarm and soapy water.
- Do not use chemical cleaning agents.
- Do not dry by heating them to over 176°F (80°C) or exposing them to direct sunlight.

Display

- Switch off the display and let it cool down.

- Clean the surface carefully with a microfiber cloth and a suitable display care product (TFT-LCD).
- Do not use any other agents.

Head-up display

- Clean with a soft, non-static, lint-free cloth.
- Do not use cleaning agents.

Plastic trim

- Clean with a damp microfiber cloth.
- For heavy soiling: Use a cleaner recommended for Mercedes-Benz.
- Do not attach stickers, films or similar materials.
- Do not allow cosmetics, insect repellent or sun cream to come in contact with the plastic trim.

Real wood and trim elements

- Clean with a microfiber cloth.
- Black piano-lacquer look: clean with a damp cloth and soapy water.
- For heavy soiling: Use a cleaner recommended for Mercedes-Benz.
- Do not use solvent-based cleaning agents, polishes or waxes.

Headliner

- Clean with a brush or dry shampoo.

Carpet

- Use a carpet and textile cleaning agent recommended for Mercedes-Benz.

Steering wheels made of imitation leather

- Use a damp cotton cloth and a 1% soap solution to clean the entire steering wheel. Do not spot clean.
- Use cleaning and care products recommended for Mercedes-Benz.
- Do not use a microfiber cloth.
- Do not use oil-based cleaning and care products.

Steering wheel made of genuine leather or DINAMICA

! **NOTE** Damage caused by wrong cleaners

▶ Do not use solvent-based cleaning agents such as tar remover or wheel cleaner; neither should you use polishes or waxes. Otherwise you may damage the finish.

- Clean with a damp cloth and a 1% soapy water solution and then wipe with a dry cloth.
- For heavy soiling: Use a cleaner recommended for Mercedes-Benz.
- Leather care: Use a leather care agent that has been recommended for Mercedes-Benz.
- Do not allow the leather to become too damp.
- Do not use a microfiber cloth.

ⓘ Leather is a natural product. It has natural surface properties, such as differences in structure, marks caused by growth and injury or subtle color differences. These surface properties are characteristics of leather and not material defects. Leather is also subject to a natural aging process during which the surface properties change.

Genuine leather seat covers

- Vacuum up dirt such as crumbs or dust and then clean the seat covers with a damp cotton cloth and wipe down with a dry cloth. Regularly clean the seat covers.
- For heavy soiling: use a leather care agent recommended for Mercedes-Benz aftercare.
- Leather care: Use a leather care agent that has been recommended for Mercedes-Benz.
- Do not use a microfiber cloth.
- Do not allow the leather to become too damp.
- Do not use oil-based cleaning and care products.

ⓘ Leather is a natural product. It has natural surface properties, such as differences in structure, marks caused by growth and injury or subtle color differences. These surface properties are characteristics of leather and not material defects. Leather is also subject to a natural aging process during which the surface properties change.
Waves or wrinkling in the seat cover may occur due to the stress on the seat; this is caused by the natural leather material.
Regular cleaning and care of the leather reduces soiling, wear marks and aging damage and thus significantly extends its life span. Clothing that can leave stains (e.g. jeans) may discolor the leather.

DINAMICA seat covers

- Vacuum up dirt such as crumbs or dust and then use a damp cloth to clean.
- Do not use a microfiber cloth.

Imitation leather seat covers

- Vacuum up dirt such as crumbs or dust and then use a damp cotton cloth and a 1% soap solution to clean the entire seat cover. Do not spot clean.
- Use cleaning and care products recommended for Mercedes-Benz.
- Do not use a microfiber cloth.
- Do not use oil-based cleaning and care products.

Cloth seat covers

- Vacuum up dirt such as crumbs or dust and then use a damp microfiber cloth and a 1% soap solution to clean the entire seat cover. Do not spot clean.
- Use cleaning and care products recommended for Mercedes-Benz.
- Do not use oil-based cleaning and care products.

EASY-PACK trunk box

- Clean with a damp cloth.
- Do not use any alcohol-based thinners, gasoline or abrasive cleaning agents.

Emergency

Removing the safety vest

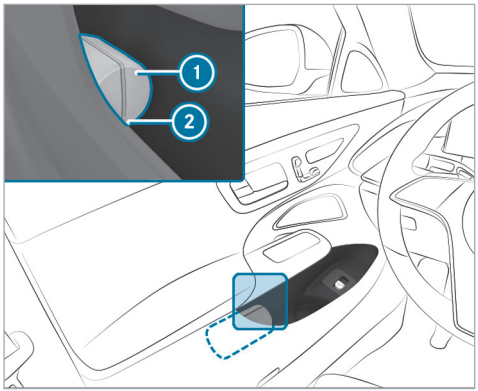

There is a safety vest compartment in the stowage compartments of all doors for storing a safety vest.

▶ To remove: pull out safety vest bag ① by loop ②.

▶ Open safety vest bag ① and pull out the safety vest.

▶ To stow: fold the reflective safety jacket, roll it up and stow it in safety jacket bag ①.

▶ Slide safety jacket bag ① along the lower edge of the armrest into the safety jacket compartment. Meanwhile, ensure that loop ② hangs out well within reach.

ⓘ Remove a new reflective safety jacket from its packaging material before sliding it into the safety jacket compartment. The packaging material may otherwise cause it to slip out or make removing it difficult.
Observe the legal requirements in each country.

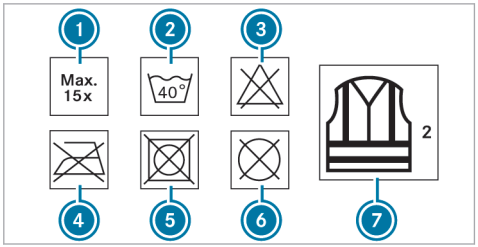

① Maximum number of washes
② Maximum wash temperature
③ Do not bleach
④ Do not iron
⑤ Do not tumble dry
⑥ Do not dry clean
⑦ Class 2 safety vest

The requirements defined by the legal standard are only fulfilled if the safety vest is the correct size and is fully closed.

Replace the safety vest in the following cases:

- The reflective strips are damaged or dirty

- The maximum permissible number of washes is exceeded
- The fluorescence has faded, e.g. due to continuous exposure to sunlight.

Dispose of the safety vest in an environmentally responsible manner:

- To do so, contact your local waste disposal company.

Warning triangle

Removing the warning triangle

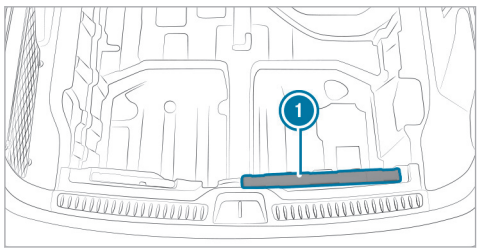

Warning triangle 1 is located under the cargo floor in the loading sill when the vehicle is delivered.

▶ Remove warning triangle 1.

Setting up the warning triangle

▶ Fold the side reflectors upwards to form a triangle and attach at the top using the upper press-stud.

▶ Fold the legs down and out to the side.

First-aid kit (soft-sided) overview

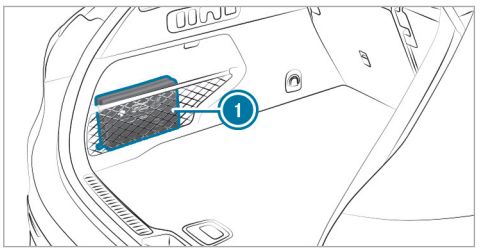

First-aid kit (soft sided) 1 is in the cargo compartment in the left-hand stowage net.

Flat tire

Notes on flat tires

⚠ **WARNING** Risk of accident due to a flat tire

A flat tire severely affects the driving characteristics as well as steering and braking.

Tires without run-flat characteristics:

▶ Do not drive on with a flat tire.

▶ Change the flat tire immediately with an emergency spare wheel or spare wheel. Alternatively, consult a qualified specialist workshop.

Tires with run-flat characteristics:

▶ Observe the information and warning notes on MOExtended tires (run-flat tires).

In the event of a flat tire, you have the following options depending on your vehicle's equipment:

- **Vehicles with MOExtended tires:** it is possible to continue your journey for a short period of time. Make sure you observe the notes on MOExtended tires (run-flat tires) (→ page 577).
- **Vehicles with a TIREFIT kit:** you can seal the tire so that it is possible to continue your journey for a short period of time. To do this, use the TIREFIT kit (→ page 579).
- **Vehicles with Mercedes me connect:** you can make a call for breakdown assistance via the overhead control panel in the case of a breakdown (→ page 521).
- **All vehicles:** change the wheel (→ page 624).

ⓘ The emergency spare wheel is available only in certain countries (→ page 630). Vehicles equipped with MOExtended tires are not equipped with a TIREFIT kit at the factory. It is therefore recommended that you additionally equip your vehicle with a TIREFIT kit if you mount tires on your vehicle that do not feature run-flat characteristics, e.g. winter tires. A TIREFIT kit may be obtained from a qualified specialist workshop.

Vehicles with a Mercedes-Benz emergency call system that are not equipped with a TIREFIT kit: in the event of a flat tire, contact the Customer Assistance Center for the Mercedes-Benz emergency call system .

Notes on MOExtended tires (run-flat tires)

⚠ **WARNING** Risk of accident when driving in limp-home mode

When driving in emergency mode the handling characteristics are impaired.

▶ Do not exceed the specified maximum speed of the MOExtended tires.

▶ Avoid any abrupt steering and driving maneuvers as well as driving over obstacles (curbs, pot holes, off-road). This applies, in particular, to a loaded vehicle.

▶ Stop driving in the emergency mode if you notice:

- Banging noise
- Vehicle vibration
- Smoke which smells like rubber
- Continuous ESP® intervention
- Cracks in the tire side walls

▶ After driving in emergency mode, have the rims checked by a qualified specialist workshop with regard to their further use.

▶ The defective tire must be replaced in every case.

With MOExtended tires (run-flat tires), you can continue to drive your vehicle even if there is a total loss of pressure in one or more tires. However, the tire affected must not show any clearly visible damage.

You can recognize MOExtended tires by the MOExtended marking which appears on the side wall of the tire.

Vehicles with tire pressure loss warning system: MOExtended tires may only be used in conjunc-

tion with an activated tire pressure loss warning system.

Vehicles with tire pressure monitoring system: MOExtended tires may only be used in conjunction with an activated tire pressure monitoring system.

If a pressure loss warning message appears in the driver's display, proceed as follows:

- Check the tire for damage.
- If driving on, observe the following notes.

Driving distance possible in emergency mode after the pressure loss warning:

Load condition	Driving distance possible in emergency mode
Partially laden	50 miles (80 km)
Fully laden	19 miles (30 km)

The driving distance possible in emergency mode may vary depending on the driving style. Observe the maximum permissible speed of 50 mph (80 km/h).

If a tire has gone flat and cannot be replaced with an MOExtended tire, you can use a standard tire as a temporary measure.

TIREFIT kit storage location

Plug-in hybrid

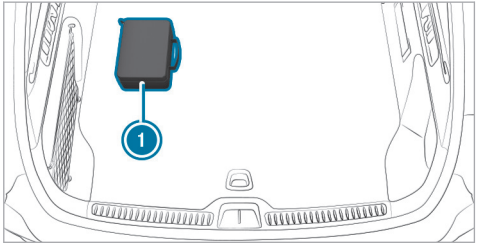

The TIREFIT kit (1) is located on the left-hand side of the cargo compartment in the as-delivered condition.

Not plug-in hybrid

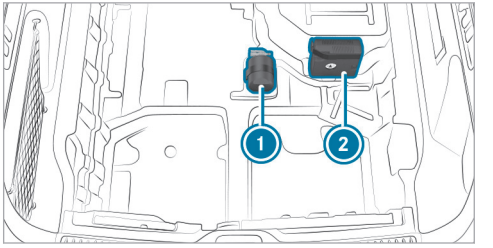

(1) Tire sealant bottle
(2) Tire inflation compressor

The TIREFIT kit is located under the cargo floor in the as-delivered condition.

Depending on the vehicle version, the TIREFIT kit may be located in a different position in the cargo compartment.

ⓘ Depending on the power category (LK), the tire inflation compressor weighs as follows:

- LK1 – 12 V/10 A, 120 W, 1.8 lbs (0.8 kg)
- LK2 – 12 V/15 A, 180 W, 2 lbs (0.9 kg)

You can find information on the power category (LK) and/or electrical data on the back of the tire inflation compressor.
The tire inflation compressor is maintenance-free. In the event of a malfunction, please contact a qualified specialist workshop.

Using the TIREFIT kit

Requirements

- Tire sealant bottle and tire inflation compressor are ready for use (→ page 54).
- TIREFIT sticker is present.
- Gloves are present.

TIREFIT kit storage location: (→ page 54)

You can use TIREFIT tire sealant to seal perforation damage of up to 0.16 in (4 mm), particularly in the tire tread. You can use TIREFIT in outside temperatures down to -4 °F (-20 °C).

WARNING Risk of accident when using tire sealant

The tire sealant may be unable to seal the tire properly, especially in the following cases:

- There are large cuts or punctures in the tire (larger than damage previously mentioned)
- The wheel rims have been damaged
- After journeys with very low tire pressure or with flat tires

▶ Do not continue driving.
▶ Consult a qualified specialist workshop.

WARNING Risk of injury and poisoning from tire sealant

The tire sealant is harmful and causes irritation. Do not allow it to come into contact with the skin, eyes or clothing, and do not swallow it. Do not inhale tire sealant fumes. Keep the tire sealant away from children.

If you come into contact with the tire sealant, observe the following:

▶ Rinse off the tire sealant from your skin immediately using water.
▶ If tire sealant gets into your eyes, thoroughly rinse out the eyes using clean water.
▶ If tire sealant has been swallowed, immediately rinse out the mouth thoroughly and drink plenty of water. Do not induce vomiting and seek medical attention immediately.
▶ Change out of any clothes contaminated with tire sealant immediately.
▶ If allergic reactions occur, seek medical attention immediately.

NOTE Overheating due to the tire inflation compressor running too long

▶ Do not run the tire inflation compressor for longer than ten minutes without interruption.

Comply with the manufacturer's safety notes on the sticker on the tire inflation compressor.

Have the tire sealant bottle replaced at a qualified specialist workshop every five years.

- Do not remove any foreign bodies that have entered the tire.

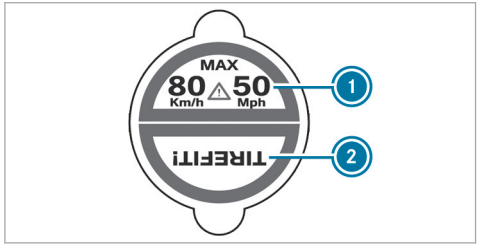

- Affix part 1 of the TIREFIT sticker to the instrument cluster within the driver's field of vision.
- Affix part 2 of the TIREFIT sticker near the valve on the wheel with the defective tire.

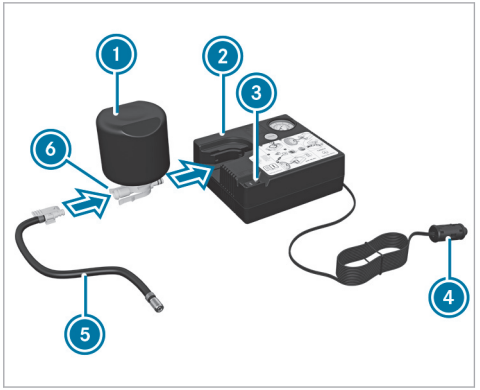

- Pull plug 4 with the cable and hose 5 out of the tire inflation compressor housing.
- Push the plug of hose 5 into flange 6 of tire sealant bottle 1 until the plug engages.
- Insert tire sealant bottle 1 head downwards into recess 2 of the tire inflation compressor.

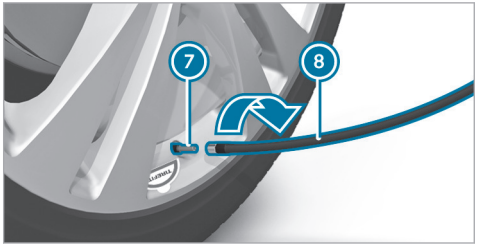

- Remove the valve cap from valve 7 on the defective tire.
- Screw filling hose 8 onto valve 7.
- Insert plug 4 into a 12 V socket in your vehicle.
- Switch on the vehicle.
- Press on and off switch 3 on the tire inflation compressor.
  The tire inflation compressor will be switched on. The tire will be inflated. First, tire sealant will be pumped into the tire. The pressure may briefly rise to approximately 500 kPa (5 bar/ 73 psi).

Do not switch off the tire inflation compressor during this phase!

- Let the tire inflation compressor run for a maximum of ten minutes.
  The tire should then have attained a tire pressure of at least 200 kPa (2.0 bar/29 psi).

If tire sealant leaks out, make sure you clean the affected area as quickly as possible. It is preferable to use clean water.

If you get tire sealant on your clothing, have it cleaned as soon as possible with perchloroethylene.

If, after ten minutes, a tire pressure of 200 kPa (2.0 bar/29 psi) has not been attained:

- Switch off the tire inflation compressor.
- Unscrew the filling hose from the valve of the defective tire.

Please note that tire sealant may leak out when you unscrew the filling hose.

- Drive forwards or in reverse very slowly for approximately 33 ft (10 m).
- Pump up the tire again.
  After a maximum of ten minutes, the tire pressure must be at least 200 kPa (2.0 bar/29 psi).

WARNING Risk of accident due to the specified tire pressure not being achieved

If the specified tire pressure is not achieved after the specified time, the tire is too badly damaged. The tire sealant cannot repair the tire in this instance.

The braking characteristics as well as the driving characteristics may be greatly impaired.

- Do not continue driving.
- Consult a qualified specialist workshop.

If, after ten minutes, a tire pressure of 200 kPa (2.0 bar/29 psi) has been attained:

WARNING Risk of accident from driving with sealed tires

A tire temporarily sealed with tire sealant impairs the handling characteristics and is not suitable for higher speeds.

- Adapt your driving style accordingly and drive carefully.
- Do not exceed the maximum speed limit with a tire that has been repaired using tire sealant.

- Observe the maximum permissible speed of 50 mph (80 km/h) for a tire sealed with tire sealant.
- Affix the upper section of the TIREFIT sticker to the instrument cluster in a location where it will be easily seen by the driver.

NOTE Staining caused by leaking tire sealant

After use, excess tire sealant may leak out from the filling hose.

- Therefore, place the filling hose in the plastic bag that contained the TIREFIT kit.

ENVIRONMENTAL NOTE Environmental pollution caused by environmentally irresponsible disposal

Tire sealant contains pollutants.

- Have the tire sealant bottle disposed of professionally, e.g. at an authorized Mercedes-Benz Center.

- Switch off the tire inflation compressor.
- Unscrew the filling hose from the valve of the defective tire.
- Stow the tire sealant bottle and the tire inflation compressor.
- Pull away immediately.
- Stop driving after approximately ten minutes and check the tire pressure using the tire inflation compressor.
  The tire pressure must now be at least 130 kPa (1.3 bar/19 psi).

WARNING Risk of accident due to the specified tire pressure not being attained

If the specified tire pressure is not reached, the tire is too badly damaged. The tire sealant cannot repair the tire in this instance.

The braking and driving characteristics may be greatly impaired.

- Do not continue driving.
- Consult a qualified specialist workshop.

In cases such as the one mentioned above, contact an authorized Mercedes-Benz Center. Or call 1-800-FOR-MERCedes (in the USA) or 1-800-387-0100 (in Canada).

- Correct the tire pressure if it is still at least 130 kPa (1.3 bar/19 psi). See the Tire and Loading Information placard on the B-pillar on the driver's side or the tire pressure table in the fuel filler flap for values.
- **To increase the tire pressure:** switch on the tire inflation compressor.

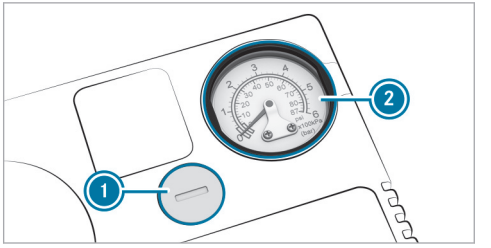

- **To reduce the tire pressure:** press pressure release button (1) next to manometer (2).
- When the tire pressure is correct, unscrew the filling hose from the valve of the sealed tire.
- Screw the valve cap onto the valve of the sealed tire.

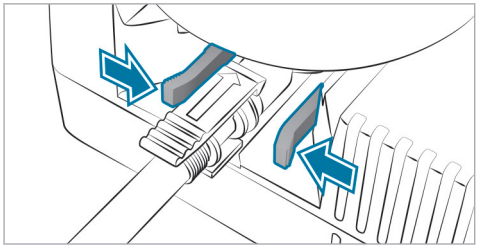

▶ Pull the tire sealant bottle out of the tire inflation compressor. Press the locking tabs on the yellow cap together to do this.
The filling hose stays on the tire sealant bottle.

▶ Drive to the nearest qualified specialist workshop and have the tire, tire sealant bottle and filling hose replaced there.

Battery (vehicle)

Notes on the 12 V battery

⚠ **WARNING** Risk of an accident due to work carried out incorrectly on the battery

Work carried out incorrectly on the battery can, for example, lead to a short circuit. This can restrict functions relevant for safety systems and impair the operating safety of your vehicle.

You could lose control of the vehicle in the following situations in particular:

- When braking
- In the event of abrupt steering maneuvers and/or when the vehicle's speed is not adapted to the road conditions

▶ In the event of a short circuit or a similar incident, contact a qualified specialist workshop immediately.

▶ Do not drive on.

▶ Always have work on the battery carried out at a qualified specialist workshop.

- Further information on ABS (→ page 305)
- Further information on ESP®(→ page 307) (→ page 306)

For safety reasons, Mercedes-Benz recommends that you use only batteries that have been approved for your vehicle by Mercedes-Benz.

All vehicles except vehicles with lithium-ion batteries

⚠ **WARNING** Risk of explosion due to electrostatic charge

Electrostatic charge can ignite the highly explosive gas mixture in the battery.

▶ To discharge any electrostatic charge that may have built up, touch the metal vehicle body before handling the battery.

The highly flammable gas mixture is created while the battery is charging and during jump-starting.

⚠ **WARNING** Danger of chemical burns from the battery acid

Battery acid is caustic.

- ▶ Avoid contact with the skin, eyes or clothing.
- ▶ Do not lean over the battery.
- ▶ Do not inhale battery gases.
- ▶ Keep children away from the battery.
- ▶ Immediately rinse battery acid off thoroughly with plenty of clean water and seek medical attention immediately.

All vehicles

ENVIRONMENTAL NOTE Environmental damage due to improper disposal of batteries

Batteries contain pollutants. It is illegal to dispose of them with the household rubbish.

▶ Dispose of batteries in an environmentally responsible manner.

Take discharged batteries to a qualified specialist workshop or to a collection point for used batteries.

If you have to disconnect the 12 V battery, contact a qualified specialist workshop.

Observe the safety notes and protective measures when handling batteries.

Risk of explosion if the 12 V battery is used improperly.

Fire, open flames and smoking are prohibited when you are handling the battery. Avoid creating sparks.

Electrolyte or battery acid is corrosive. Avoid contact with the skin, eyes or clothing. Wear suitable protective clothing, especially gloves, an apron and a safety mask. Immediately rinse electrolyte or acid splashes off with clean water. Consult a doctor immediately.

Do not place heavy objects on the surface of the battery or use the battery to support a person in any way.

Wear eye protection.

Keep children away.

Observe this Operator's Manual.

Observe the following if you are intending not to use the vehicle for an extended period of time:

- **If available:** activate standby mode (→ page 303, 302).
- Alternatively: connect the battery to a battery charger approved by Mercedes-Benz or consult a qualified specialist workshop to disconnect the battery.

Notes on the 48 V battery

WARNING Risk of an accident due to work carried out incorrectly on the battery

Work carried out incorrectly on the battery can, for example, lead to a short circuit. This can restrict functions relevant for safety systems and impair the operating safety of your vehicle.

You could lose control of the vehicle in the following situations in particular:

- When braking
- In the event of abrupt steering maneuvers and/or when the vehicle's speed is not adapted to the road conditions

▶ In the event of a short circuit or a similar incident, contact a qualified specialist workshop immediately.

▶ Do not drive on.

▶ Always have work on the battery carried out at a qualified specialist workshop.

- Further information on ABS (→ page 305)
- Further information on ESP®(→ page 307) (→ page 306)

ENVIRONMENTAL NOTE Environmental damage due to improper disposal of batteries

Batteries contain pollutants. It is illegal to dispose of them with the household trash.

▶ **Li-ion** Dispose of batteries in an environmentally responsible manner. Take discharged batteries to a qualified specialist workshop or to a collection point for used batteries.

Have any work on the 48 V battery carried out exclusively at a qualified specialist workshop.

Comply with safety notes and take protective measures when handling batteries.

Risk of explosion if the 48 V battery is used improperly.

The surface of the 48 V battery may be hot.

Fire, naked flames and smoking are prohibited when handling the battery. Avoid creating sparks.

Electrolyte or battery acid is corrosive. Avoid contact with the skin, eyes or clothing. Wear suitable protective clothing, in particular gloves, an apron and a face mask. Immediately rinse off splashes of electrolyte or acid with plenty of clean water. Consult a doctor immediately.

Do not place heavy objects on the surface of the battery or use the battery to support a person in any way.

Do not perform any work on the battery. Always have any work on the battery carried out at a qualified specialist workshop. Do not disconnect the battery yourself. Do not remove the battery yourself. Do not attempt to open the battery.

Keep children away.

Wear safety glasses.

Observe this Operator's Manual.

Observe the following if you do not intend to use the vehicle over an extended period of time:

- **If available:** activate standby mode (→ page 303, 302).

Notes on the high-voltage battery

DANGER Risk of fire and explosion from excessive internal pressure of the high-voltage battery

In the event of a vehicle fire, flammable gas can escape and ignite.

▶ If there is an unusual smell, smoke or burn marks, stop the charging process immediately.

▶ Leave the danger zone immediately. Secure the danger area at a sufficient distance.

▶ Call the fire service.

Observe the notes on charging the high-voltage battery (→ page 273).

Risk of explosion.

Fire, open flames and smoking are prohibited when you are handling the battery. Avoid creating sparks.

Electrolyte or battery acid is corrosive. Avoid contact with the skin, eyes or clothing. Wear suitable protective clothing, especially gloves, an apron and a safety mask. Immediately rinse electrolyte or acid splashes off with clean water. Consult a doctor immediately.

Wear safety glasses.

Keep children away.

Observe this Operator's Manual.

Notes on starting assistance and charging the 12 V battery

All vehicles

When charging the battery and during starting assistance, always use the jump-start connection point in the engine compartment.

NOTE Damage to the battery due to overvoltage

When charging using a battery charger without a maximum charging voltage, the battery or the on-board electronics may be damaged.

▶ Only use battery chargers with a maximum charging voltage of 14.8 V.

WARNING Risk of explosion due to igniting hydrogen gas

If you cause a short circuit or sparks occur, the hydrogen gas may ignite when a battery is charging.

- Ensure that the positive terminal of a connected battery does not come into contact with vehicle parts.
- Never place metal objects or tools on a battery.
- When connecting and disconnecting the battery, always observe the sequence of battery terminals described.
- When jump starting, take care to connect only battery terminals of identical polarity.
- When jump starting, always observe the sequence described for connecting and disconnecting the jumper cables.
- Do not connect or disconnect the battery terminals when the engine is running.

WARNING Risk of explosion due to a mixture of explosive gases

A mixture of explosive gases can escape from the battery during charging and jump starting.

- Fire, open flames, smoking and creating sparks must be avoided.
- Make sure that there is sufficient ventilation.
- Do not stand over the battery.

WARNING Risk of explosion from a frozen battery

A discharged battery may freeze at temperatures slightly above or below freezing point.

During starting assistance or battery charging, battery gas can be released.

- Always allow a battery to thaw before charging it or performing starting assistance.

If, at low temperatures, the indicator lamps/warning lamps in the instrument cluster do not light up, it is highly likely that the discharged battery has frozen. In this case, you may neither charge the battery nor jump-start the vehicle.

The service life of a battery that has been thawed may be drastically reduced. The starting characteristics can be impaired, particularly at low temperatures.

We recommend having the thawed-out battery inspected at a qualified specialist workshop.

Plug-in hybrid

If your vehicle has been started with starting assistance, it may not be possible to use the electric drive for approximately 30 minutes.

Starting assistance is not considered to be a normal operating condition.

All vehicles

NOTE Damage caused by numerous or extended attempts to start the engine

Numerous or extended attempts to start the engine may damage the catalytic converter due to non-combusted fuel.

▶ Avoid numerous and extended attempts to start the engine.

Observe the following points during starting assistance and when charging the battery:

- Use only undamaged jumper cables / charging cables with a sufficient cross-section and insulated terminal clamps.
- Non-insulated parts of the terminal clamps must not come into contact with other metal parts while the jumper cable / charging cable is connected to the battery / jump-start connection point.
- The jumper cables / charging cables must not come into contact with any parts that may move when the engine is running
- Always make sure that neither you nor the battery is electrostatically charged.
- Keep away from fire and open flames.
- Do not lean over a battery.

Also observe the following points when charging the battery:

- Use only chargers tested and approved for Mercedes-Benz.
- Read the operating instructions for the charger before charging the battery.

Also observe the following points during starting assistance:

- Starting assistance may only be provided using vehicles, batteries or other jump start devices with a nominal voltage of 12 V.
- The vehicles must not touch each other.
- **Vehicles with a gasoline engine:** only jump-start your vehicle when the engine and exhaust system are cold.

Starting assistance and charging the 12 V battery

Preparing starting assistance/charging

▶ Secure the vehicle by applying the electric parking brake.

▶ Shift the transmission to position P.

▶ Switch off the vehicle and all electrical consumers.

▶ Open the hood.

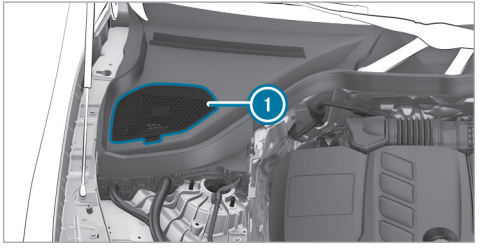

▶ Open cover 1 of the jump-start connection point.

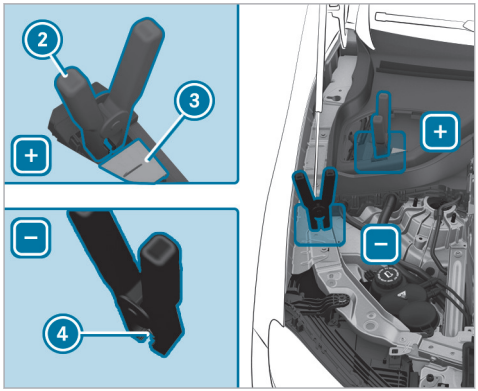

▶ Open cover ③ of positive contact ② on the jump-start connection point.

Starting assistance

▶ Connect positive terminal ② on your vehicle to positive terminal of the donor battery using the jumper cable. Always begin with positive clamp ② on your own vehicle first.

▶ Start the engine of the donor vehicle and run it at idling speed.

▶ Connect the negative terminal of the donor battery to ground point ④ of your vehicle using the jumper cable. Begin with the donor battery first.

▶ Start the engine of your own vehicle.

▶ Let the engines run for several minutes.

▶ Before disconnecting the jumper cables, switch on an electrical consumer in your own vehicle, e.g. the rear window defroster or the lighting.

When the starting assistance procedure is complete:

▶ Remove the jumper cables from ground point ④ first and the negative terminal of the donor battery, then from positive contact ② and the positive terminal of the donor battery. Begin each time with the contacts on your own vehicle first.

▶ Close cover ③ of positive terminal ② after removing the jumper cables.

▶ Close cover ①.

If your vehicle has been started with starting assistance, it may not be possible to use the electric drive for approximately 30 minutes.

Further information can be obtained at a qualified specialist workshop.

Charging

▶ Connect positive contact ② on the vehicle to the positive terminal of the charger using the charging cable. Always begin with positive contact ② on the vehicle.

▶ Connect the negative terminal of the charger and ground point ④ on the vehicle with the charging cable. Start with the charger.

▶ Start the charging process.

When the charging process is complete:

▶ Remove the charging cable from ground point ④ first and the negative terminal of the charger, then from positive contact ② and the positive terminal of the charger. Begin each time with the contacts on the vehicle.

- After removing the charging cable, close cover ③ of positive contact ②.
- Close cover ①.

Further information can be obtained at a qualified specialist workshop.

Replacing the 12 V battery

- Observe the notes on the 12 V battery (→ page 583).

Mercedes-Benz recommends that you have the 12 V battery replaced at a qualified specialist workshop, e.g. at an authorized Mercedes-Benz Center.

Observe the following notes if you want to replace the battery yourself:

- Always replace a faulty battery with a battery that meets the specific vehicle requirements.

  The vehicle is equipped with an AGM (Absorbent Glass Mat) technology battery or a lithium-ion battery. Full vehicle functionality is guaranteed only with an AGM or lithium-ion battery. For safety reasons, Mercedes-Benz recommends that you use only batteries that have been tested and approved for your vehicle by Mercedes-Benz.
- Use detachable parts such as vent hoses, elbow fittings or terminal covers from the battery to be replaced.
- Make sure that the vent hose is always connected to the original opening on the side of the battery.

  Install any existing or supplied cell caps.

  Otherwise, gases or battery acid could escape.
- Make sure that detachable parts are reconnected in the same way.

Tow starting or towing away

Permitted towing methods

! NOTE Damage from automatic braking

If one of the following functions is activated, the vehicle will brake automatically in certain situations:

- Active Brake Assist
- Active Distance Assist DISTRONIC
- HOLD function
- Active Parking Assist

To avoid damage to the vehicle, switch off these systems, e.g. when towing or using a car wash.

Mercedes-Benz recommends transporting your vehicle in the case of a breakdown, rather than towing it away.

For towing with both axles on the ground, use a tow rope or tow rod. Do not use tow bar systems.

NOTE Damage to the vehicle due to towing away incorrectly

▶ Observe the instructions and notes on towing away.

Towing with a raised axle: towing should be performed by a towing company.

Vehicles with rear wheel drive

Permitted towing methods	
Both axles on the ground	Yes, for a maximum of 31 miles (50 km) at 31 mph (50 km/h)
Front axle raised	No
Rear axle raised	Yes, if the steering wheel is fixed in the center position with a steering wheel lock

4MATIC vehicles

Permitted towing methods	
Both axles on the ground	Yes, for a maximum of 31 miles (50 km) at 31 mph (50 km/h)
Front axle raised	No
Rear axle raised	No

Permitted towing methods (plug-in hybrid)

ⓘ The following information does not apply to Mercedes-AMG E Performance vehicles.

NOTE Mercedes-AMG vehicles

▶ Observe the notes in the Supplement. You could otherwise fail to recognize dangers.

Mercedes-Benz recommends transporting your vehicle in the case of a breakdown, rather than towing it away.

For towing with both axles on the ground, use a tow rope or tow rod. Do not use tow bar systems.

NOTE Damage to the vehicle due to towing away incorrectly

▶ Observe the instructions and notes on towing away.

In the following situations, only transporting the vehicle is permitted:

- The driver's display is not working
- The Towing Not Permitted See Operator's Manual display message appears on the driver's display.

Exception: If the vehicle is located in a danger zone, it can be recovered from the danger zone despite the Towing Not Permitted See Operator's Manual display message or the display not working. It must not be towed further than 55 yd (50 m) with both axles on the ground. A

towing speed of 6 mph (10 km/h) must not be exceeded. Beyond these limits, only transporting is permitted.

Vehicles with rear wheel drive

Permitted towing methods	
Both axles on the ground	Yes, for a maximum of 31 miles (50 km) at 31 mph (50 km/h), only forwards with the driver in the vehicle
Front axle raised	No
Rear axle raised	Yes, if the steering wheel is fixed in the center position with a steering wheel lock

4MATIC vehicles

Permitted towing methods	
Both axles on the ground	Yes, for a maximum of 31 miles (50 km) at 31 mph (50 km/h), only forwards with the driver in the vehicle
Front axle raised	No
Rear axle raised	No

Permissible towing methods (Mercedes-AMG E Performance)

! **NOTE** Damage caused by towing

Towing can damage the hybrid system.

▶ Have the vehicle loaded and transported rather than towed.

Towing the vehicle with both axles on the ground

▶ Observe the notes on the permitted towing methods.

▶ Make sure that the battery is connected and charged.

Observe the following points when the battery is discharged:

- the vehicle cannot be started.
- the electric parking brake cannot be released or applied
- **Vehicles with automatic transmission:** the transmission cannot be shifted to position **N** or **P**.

ⓘ **Vehicles with automatic transmission:** if the transmission cannot be shifted to position **N** or if the display does not show anything, transport the vehicle (→ page 594). A towing vehicle with lifting equipment is required for vehicle transportation.

NOTE Damage due to towing away at excessively high speeds or over long distances

The drivetrain could be damaged when towing at excessively high speeds or over long distances.

- A towing speed of 30 mph (50 km/h) must not be exceeded.
- A towing distance of 30 miles (50 km) must not be exceeded.

WARNING Risk of accident when towing a vehicle which is too heavy

If the vehicle to be tow-started or towed away is heavier than the permissible gross mass of your vehicle, the following situations can occur:

- The towing eye may become detached.
- The vehicle/trailer combination may swerve or rollover.

- Before tow-starting or towing away, check if the vehicle to be tow-started or towed away exceeds the permissible gross mass.

If a vehicle has to be tow-started or towed away, its permissible gross mass must not exceed the permissible gross mass of the towing vehicle.

- Information on the permissible gross mass of the vehicle can be found on the vehicle identification plate (→ page 756).
- **Vehicles with automatic transmission:** do not open the driver's door or front passenger door; the transmission otherwise automatically shifts to position P.
- Install the towing eye (→ page 595).
- Fasten the towing device.

NOTE Damage due to incorrect connection of the tow bar

- Only connect the tow rope or tow bar to the towing eyes.

- Deactivate the automatic locking mechanism (→ page 134).
- Do not activate the HOLD function.
- Deactivate the tow-away alarm (→ page 150).
- Deactivate Active Brake Assist (→ page 342).
- **Vehicles with automatic transmission:** shift to position N.
- Release the electric parking brake.

WARNING Risk of accident due to limited safety-related functions during the towing process

Safety-related functions are limited or no longer available in the following situations:

- The vehicle is switched off.
- The brake system or power steering system is malfunctioning.
- The energy supply or the on-board electrical system is malfunctioning.

When your vehicle is towed away, significantly more effort may be required to steer and brake than is normally required.

- Use a tow bar.

▶ Make sure that the steering wheel can move freely before towing the vehicle away.

! NOTE Damage due to excessive tractive power

If you pull away sharply, the tractive power may be too high and the vehicles could be damaged.

▶ Pull away slowly and smoothly.

Loading the vehicle for transport

Plug-in hybrid: vehicles should be transported only by professional recovery companies.

▶ Observe the notes on towing away (→ page 54).

▶ Connect the towing device to the towing eye in order to load the vehicle.

ⓘ You can also attach the tow bar to the trailer hitch.

▶ Shift the automatic transmission to position N.

ⓘ The automatic transmission may be locked in position P in the event of damage to the electrics. To shift to N, provide the on-board electrical system with power (→ page 50).

▶ Load the vehicle onto the transporter.

▶ Shift the automatic transmission to position P.

▶ Use the electric parking brake to secure the vehicle against rolling away.

▶ Secure the vehicle only by the wheels.

4MATIC vehicles

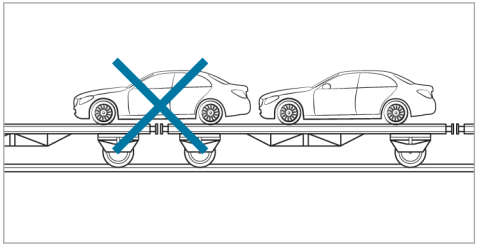

F254 0138 13

▶ Make sure that the front and rear axles come to rest on the same transportation vehicle.

! NOTE Damage to the drive train due to incorrect positioning of the vehicle

▶ Do not position the vehicle above the connection point of the transport vehicle.

Towing eye storage location

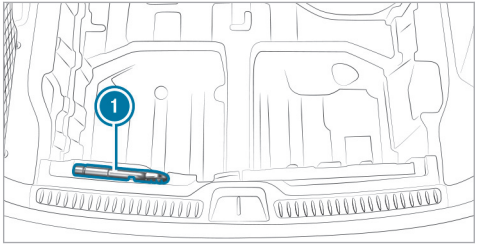

The towing eye 1 is located under the cargo floor in the loading sill.

Installing/removing the towing eye

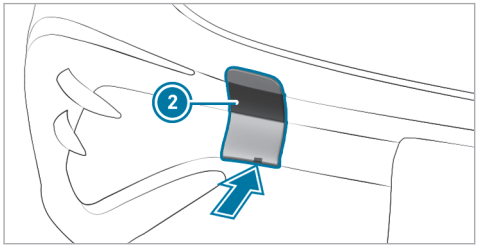

AMG Line

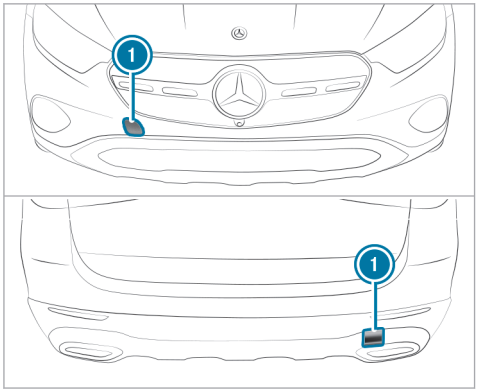

All other vehicles

- **AMG Line:** press the mark on cover (1) on the rear bumper inward and remove the cover. Use a suitable object, e.g. a screwdriver, to pry off cover (2) on the front bumper from underneath. Take the cover from the opening, but do not remove it.
- **All other vehicles:** press the mark on cover (1) inward and remove.
- Screw in the towing eye clockwise to the stop.

Vehicles with a trailer hitch: vehicles with a trailer hitch do not have a fixture at the back for the towing eye. Connect the tow bar to the trailer hitch.

- After removing the towing eye, engage cover (1) in the bumper.

! NOTE Damage to the vehicle due to incorrect use of the towing eye or trailer hitch

When a towing eye or trailer hitch is used to recover a vehicle, the vehicle may be damaged in the process.

- Only use the towing eye or trailer hitch to tow away or tow start the vehicle.
- Do not use the towing eye or trailer hitch to tow the vehicle during recovery.

Tow-starting the vehicle

Vehicles with automatic transmission

▶ Observe the following note on material damage:

NOTE Damage to the automatic transmission due to tow starting

The automatic transmission may be damaged in the process of tow starting vehicles with automatic transmission.

▶ Vehicles with automatic transmission must not be tow started.

Electrical fuses

Notes on electrical fuses

WARNING Risk of accident and injury due to overloaded lines

If you manipulate or bridge a faulty fuse or if you replace it with a fuse with a higher amperage, the electric line could be overloaded.

This could result in a fire.

▶ Always replace faulty fuses with specified new fuses containing the correct amperage.

NOTE Damage due to incorrect fuses

Using incorrect fuses can result in damage to electrical components or systems or their functions being considerably restricted.

▶ Use only fuses approved for Mercedes-Benz with the respective specified fuse rating.

Blown fuses must be replaced with fuses of the same rating, which you can recognize by the color and the label. The fuse ratings and further information to be observed can be found in the fuse assignment diagram.

Fuse assignment diagram: on the fuse box in the cargo compartment (→ page 599).

NOTE Damage or malfunctions caused by moisture

Moisture may cause damage to the electrical system or cause it to malfunction.

▶ When the fuse box is open, make sure that no moisture can enter the fuse box.

▶ When closing the fuse box, make sure that the seal of the lid is positioned correctly on the fuse box.

If the newly inserted fuse also blows, have the cause traced and rectified at a qualified specialist workshop.

Ensure the following before replacing a fuse:

- The vehicle is secured against rolling away.
- All electrical consumers are switched off.
- The vehicle is switched off.

The fuses are located in various fuse boxes:

- Fuse box in the engine compartment on the driver's side (→ page 597)
- Fuse box on the driver's side of the cockpit (→ page 598)

- Fuse box in the front-passenger footwell (→ page 599)
- Fuse box in the cargo compartment (→ page 599)

Opening and closing the fuse box in the engine compartment

Requirements

- A dry cloth and a screwdriver are available.

Observe the notes on electrical fuses (→ page 51).

Opening

WARNING Risk of injury from using the windshield wipers when the hood is open

If the windshield wipers start moving when the hood is open, you could be trapped by the wiper linkage.

▶ Always switch off the windshield wipers and the vehicle first if you need to open the hood.

▶ Open the hood (→ page 558).

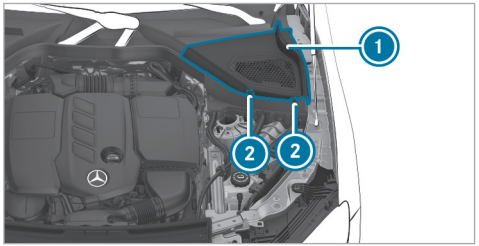

▶ Turn both retaining clips ② on cover ① on the driver's side a quarter-turn clockwise.

▶ Fold cover ① upwards.

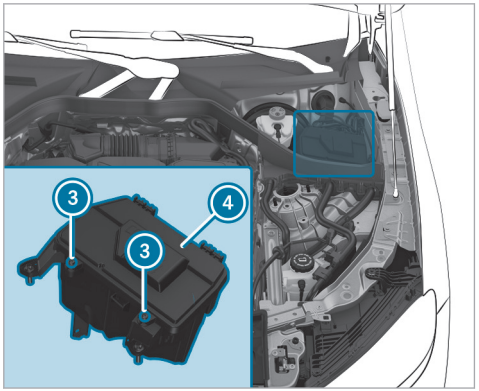

▶ Remove any existing moisture from the fuse box using a dry cloth.

▶ Loosen screws ③ and remove fuse box lid ④ from the top.

Closing

▶ Check whether the seal is positioned correctly in lid ④.

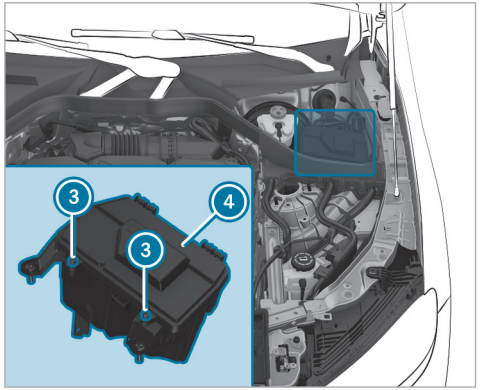

- Insert lid ④ into the bracket at the rear of the fuse box.
- Fold down lid ④ of the fuse box and tighten screws ③.

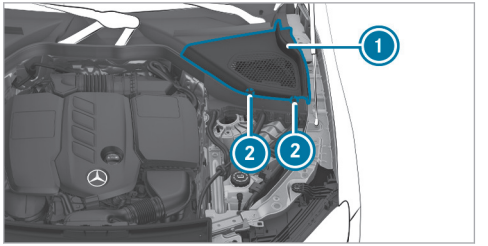

- Fold down cover ①.
- Turn both retaining clips ② on cover ① a quarter-turn counter-clockwise.
- Close the hood.

Opening and closing the fuse box in the cockpit

Requirements

- Please observe the notes on electrical fuses (→ page 51).

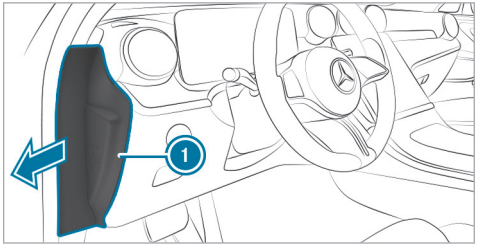

The fuse box is on the driver's side at the side of the cockpit under a cover.

- **To open:** Flip open cover ① in the direction of the arrow and remove it.
- **To close:** Reinsert cover ①.

Mercedes-Benz recommends that you have the fuse box opened at a Mercedes-Benz Service Center.

Opening and closing the fuse box in the front passenger footwell

Requirements
Observe the notes on electrical fuses (→ page 51).

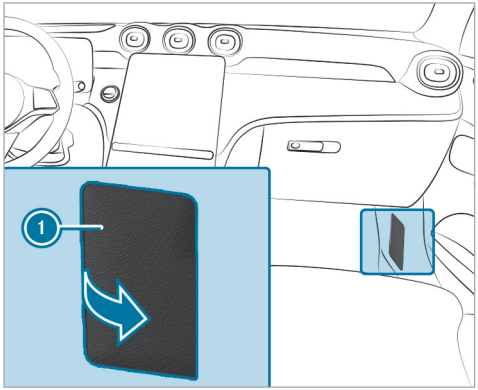

- **To open:** fold out and remove cover 1.
- **To close:** reinsert cover 1.

Opening and closing the fuse box in the load compartment

Requirements
Observe the notes on electrical fuses (→ page 51).

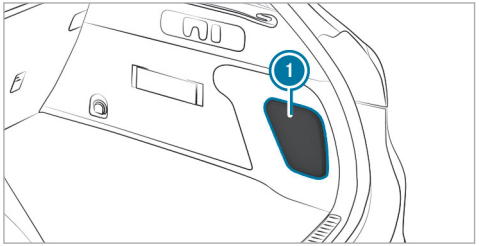

- **To open:** fold out and remove cover 1.
- **To close:** reinsert cover 1.

The fuse assignment diagram is on the side of the fuse box.

Notes on noise or unusual handling characteristics

Make sure there are no vibrations, noises or unusual handling characteristics when the vehicle is in motion. This may indicate that the wheels or tires are damaged. Hidden tire damage could also be causing the unusual handling characteristics.

If you suspect that a tire is defective, reduce your speed immediately and have the tires and wheels checked at a qualified specialist workshop.

Notes on regularly inspecting wheels and tires

WARNING Risk of injury through damaged tires

Damaged tires can cause tire pressure loss.

▶ Check the tires regularly for signs of damage and replace any damaged tires immediately.

WARNING Risk of hydroplaning due to insufficient tire tread

Insufficient tire tread will result in reduced tire grip.

In heavy rain or slush the risk of hydroplaning is increased, in particular where speed is not adapted to suit the conditions.

▶ Thus, you should regularly check the tread depth and the condition of the tread across the entire width of all tires.

Minimum tread depth for:

- Summer tires: ⅛ in (3 mm)
- M+S tires: ⅙in (4 mm)

▶ For safety reasons, replace the tires before the legally-prescribed limit for the minimum tread depth is reached.

Carry out the following checks on all wheels regularly, at least once a month or as required, for example, prior to a long journey or driving off-road:

- Check the tire pressure (→ page 601).
- Visually inspect wheels and tires for damage.
- Check the valve caps.
- Visually inspect the tire tread depth and the tire contact surface across the entire width.

  The minimum tread depth for summer tires is ⅛ in (3 mm) and for winter tires ⅙ in (4 mm).

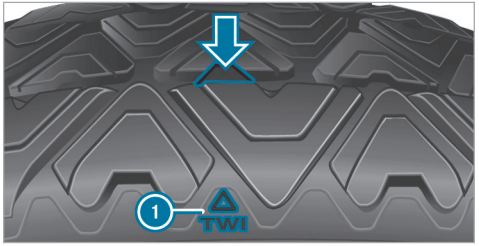

Six marks ① show where the bar indicators (arrow) are integrated into the tire tread. They are visible once a tire tread depth of approximately 1⁄16 in (1.6 mm) has been reached.

Notes on snow chains

⚠ **WARNING** Risk of accident due to incorrectly installed snow chains

If you have installed snow chains on the front wheels, they may drag against the vehicle body or chassis components.

- ▶ Never install snow chains on the front wheels.
- ▶ Only install snow chains on the rear wheels in pairs.

! **NOTE** Damage to components of the vehicle body or chassis due to mounted snow chains

If you mount snow chains to the front wheels of 4MATIC vehicles, you may damage components of the vehicle body or chassis.

- ▶ Only mount snow chains to the rear wheels of 4MATIC vehicles.

Observe the following notes when using snow chains:

- Snow chains are only permissible for certain wheel/tire combinations. You can obtain information about this from a Mercedes-Benz Service Center.
- For safety reasons, only use snow chains that have been specifically approved for your vehicle by Mercedes-Benz, or snow chains with the same quality standard.
- Comply with the installation instructions of the snow chain manufacturer.
- If snow chains are fitted, the maximum permissible speed is 30 mph (50 km/h).
- **Vehicles with Active Parking Assist:** do not use Active Parking Assist when snow chains are fitted.

ⓘ You can deactivate ESP® to pull away (→ page 310). This allows the wheels to spin, achieving increased tractive power.

Turning snow chain mode on or off

Multimedia system:

▶ Turning Snow Chain Mode on or off.

When the function is active, the vehicle adjusts to snow chains having been mounted. Among other things, it limits the maximum steering angle of the rear wheels, and the turning circle increases.

Furthermore, some of the driving systems and driving safety systems are not available when snow chain mode is active.

Tire pressure

Notes on tire pressure

⚠ **WARNING** Risk of accident due to insufficient or excessive tire pressure

Underinflated or overinflated tires pose in particular the following risks:

- The tires can burst.

- The tires can wear excessively and/or unevenly.
- The driving characteristics as well as the steering and braking characteristics may be greatly impaired.

▶ Comply with the recommended tire pressures and check the tire pressure of all tires, including the spare wheel, regularly:

- Monthly
- When the load changes
- Before embarking on a longer journey
- If operating conditions change, e.g. off-road driving

▶ Adjust the tire pressure, if necessary.

Tire pressure which is too high or too low can:

- Shorten the service life of the tires.
- Cause increased tire damage.
- Adversely affect driving characteristics and thus driving safety, e.g. due to hydroplaning.

⚠ WARNING Risk of accident due to too low a tire pressure

Tires with pressure that is too low can overheat and burst as a consequence.

In addition, they also suffer from irregular wear, which can significantly impair the braking properties and the handling characteristics.

▶ Avoid excessively low tire pressure.

Tire pressure which is too low can cause:

- Tire defects as a result of overheating
- Impaired handling characteristics
- Irregular wear
- Increased fuel consumption

⚠ WARNING Risk of accident due to too high a tire pressure

Tires with excessively high pressure can burst.

In addition, they also suffer from irregular wear, which can significantly impair the braking properties and the handling characteristics.

▶ Avoid excessively high tire pressures.

Tire pressure which is too high can cause:

- Increased braking distance
- Impaired handling characteristics
- Irregular wear
- Impaired driving comfort
- Susceptibility to damage

⚠ WARNING Risk of accident due to repeated pressure drop in the tires

The wheels, valves or tires could be damaged.

Too low a tire pressure can lead to the tires bursting.

▶ Examine the tires for foreign objects.

▶ Check whether the tire has a puncture or the valve has a leak.

▶ If you are unable to rectify the damage, contact a qualified specialist workshop.

You can find information on the recommended tire pressures for the vehicle's factory-installed tires on the following labels:

- Tire and Loading Information placard on the B-pillar of your vehicle (→ page 608).
- Tire pressure table on the inside of the fuel filler flap (→ page 603).

Observe the maximum tire pressure (→ page 615).

Use a suitable pressure gauge to check the tire pressure. The outer appearance of a tire does not permit any reliable conclusion about the tire pressure.

Only correct tire pressure when the tires are cold. Conditions for cold tires:

- The vehicle has been parked with the tires out of direct sunlight for at least three hours.
- The vehicle has traveled less than 1 mile (1.6 km).

The vehicle's tires heat up when driving. As the temperature of the tires increases, so too does the tire pressure.

Vehicles with a tire pressure monitoring system: you can also see the tire pressure in the driver's display (→ page 605).

The tire pressure recommended for increased load/speed in the tire pressure table can affect the ride comfort.

⚠ **WARNING** Risk of accident due to unsuitable accessories on tire valves

If you mount unsuitable accessories onto tire valves, the tire valves may be overloaded and malfunction, which can cause tire pressure loss.

▶ Only screw standard valve caps or valve caps specifically approved by Mercedes-Benz for your vehicle onto the tire valve.

Notes on trailer operation

Always inflate the rear axle tires to the recommended tire pressure on the tire pressure table for increased load.

Tire pressure table

The tire pressure table is on the inside of the fuel filler flap.

ⓘ The data shown in the images is example data.

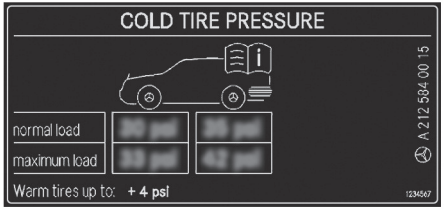

The tire pressure table shows the recommended tire pressure for all tires approved for this vehicle. The recommended tire pressure apply for cold tires under various operating conditions, i.e. loading and/or speed of the vehicle.

If one or more tire sizes precede a tire pressure, the following tire pressure information is only valid

for those tire sizes and their respective load condition.

The load conditions "partially laden" and "fully laden" are defined in the table for different numbers of passengers and amounts of luggage. The actual number of seats may differ from this.

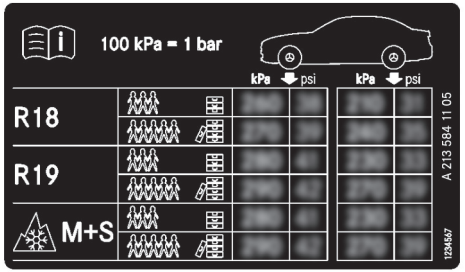

Some tire pressure tables only show the rim diameter instead of the complete tire size, e.g. **R18**.

The rim diameter is part of the tire size and can be found on the tire side wall (→ page 615).

- Tire and Loading Information placard (→ page 608)
- Maximum tire pressures (→ page 615)

Checking the tire pressure manually

▶ Read the tire pressure recommended for the current operating conditions from the tire and loading information placard or the tire pressure table. Observe the notes on tire pressure.

▶ Remove the valve cap of the tire to be checked.

▶ Press the tire pressure gauge securely onto the valve.

▶ Read the tire pressure.

▶ If the tire pressure is lower than the recommended value, increase the tire pressure to the recommended value.

▶ If the tire pressure is higher than the recommended value, release air. To do so, press down the metal pin in the valve, e.g. using the tip of a pen. Then check the tire pressure again using the tire pressure gauge.

▶ Screw the valve cap onto the valve.

Tire pressure monitoring system

Function of the tire pressure monitor

⚠ **DANGER** Risk of accident due to incorrect tire pressure

Each tire, including the spare (if provided), should be checked monthly when cold and inflated to the inflation pressure recommended by the vehicle manufacturer on the vehicle placard or tire inflation pressure label. (If your vehicle has tires of a different size than the size indicated on the vehicle placard or tire inflation pressure label, you should determine the proper tire inflation pressure for those tires.)

As an added safety feature, your vehicle has been equipped with a tire pressure monitoring system (TPMS) that illuminates a low tire pressure telltale when one or more of your tires is

significantly under-inflated. Accordingly, when the low tire pressure telltale illuminates, you should stop and check your tires as soon as possible, and inflate them to the proper pressure. Driving on a significantly under-inflated tire causes the tire to overheat and can lead to tire failure. Under-inflation also reduces fuel efficiency and tire tread life, and may affect the vehicle's handling and stopping ability. Please note that the TPMS is not a substitute for proper tire maintenance, and it is the driver's responsibility to maintain correct tire pressure, even if under-inflation has not reached the level to trigger illumination of the TPMS low tire pressure telltale.

Your vehicle has also been equipped with a TPMS malfunction indicator to indicate when the system is not operating properly. The TPMS malfunction indicator is combined with the low tire pressure telltale. When the system detects a malfunction, the telltale will flash for approximately one minute and then remain continuously illuminated. This sequence will continue upon subsequent vehicle start-ups as long as the malfunction exists.

When the malfunction indicator is illuminated, the system may not be able to detect or signal low tire pressure as intended. TPMS malfunctions may occur for a variety of reasons, including the installation of replacement or alternate tires or wheels on the vehicle that prevent the TPMS from functioning properly.

▶

The system uses a tire pressure sensor to check the pressure and temperature of the tires fitted on the vehicle.

The tire pressure and tire temperature appear on the driver's display.

If there is a substantial pressure loss or if the tire temperature is excessive, you will be warned by display messages (→ page 856) or the [(!)] warning lamp on the driver's display (→ page 884).

The tire pressure monitor is only an aid. It is the driver's responsibility to set the tire pressure to the recommended cold tire pressure suitable for the operating circumstances.

In most cases, the tire pressure monitor will automatically update the reference values after you have changed the tire pressure. You can, however, also update the reference values manually by restarting the tire pressure monitor (→ page 606).

System limits

The system may be impaired or may not function, particularly if:

- incorrect reference values were taught in.
- sudden pressure loss occurs due to a foreign object penetrating the tire, for example.
- there is a malfunction caused by another radio signal source.

Checking the tire pressure with the tire pressure monitoring system

Requirements

- The vehicle is switched on.

Driver display:

→ [⌂] ▸▸ Service

▶ Press [OK] to confirm.

One of the following displays appears:

- Current tire pressure of each wheel:

- Tire pressure displayed after driving for a few minutes.: current values are not yet known to the system. The pressure/temperature values of each tire are displayed as soon as they are known to the system.
- Tire Pressure Monitor Active: the teach-in process of the system is not yet complete. The tire pressure are already being monitored.

▶ Compare the current tire pressure with the recommended tire pressure for the current operating status (→ page 603). Additionally, observe the notes on cold tires (→ page 601).

ⓘ The values displayed in the driver display may deviate from those of the tire pressure gauge as they relate to sea level. At high elevations, the tire pressure value indicated by a pressure gauge are higher than those shown on the driver display.

Restarting the tire pressure monitoring system

Requirements

- The recommended tire pressure is correctly set for the respective operating condition on each of the four wheels (→ page 601).

Restart the tire pressure monitoring system in the following situations:

- The tire pressure has changed.
- The wheels or tires have been changed or newly installed.

Driver display:

→ [⌂] ▸▸ Service

▶ Press [OK] to display the tire pressure.

▶ Press [OK] again to display the options.

▶ Select Tire Pressure and confirm with [OK]. The driver display shows the message Use current pressures as new reference values?.

▶ Select Yes and confirm the restart with [OK]. The driver display shows the message Tire Pressure Monitor Restarted.

Current warning messages are deleted and the [(!)] yellow warning lamp goes out.

After you have driven for a few minutes, the system checks whether the current tire pressures are within the specified range. The current tire pressures are then accepted as reference values and monitored.

If the tire pressure values are not within the prescribed range, the message Please Correct Tire Pressure appears.

Tire pressure loss warning system

Function of the tire pressure loss warning system

The tire pressure loss warning system warns the driver by means of display messages when there is a severe tire pressure loss.

System limits

The system may be impaired or may not function particularly in the following situations:

- incorrect reference values were taught in
- sudden pressure loss caused by a foreign object penetrating the tire, for example
- an even pressure loss on more than one tire occurs

The system has a restricted or delayed function particularly in the following situations:

- poor ground conditions, e.g. snow or gravel
- driving with snow chains
- when adopting a very sporty driving style with high cornering speeds or sudden acceleration
- driving with a high load

The tire pressure loss warning system is only an aid. It is the driver's responsibility to set the tire pressure to the recommended cold tire pressure suitable for the operating situation and to check it.

Be sure to also observe the following further related subjects:

- Notes on tire pressure (→ page 601)
- Display messages about the tires (→ page 856)

Restarting the tire pressure loss warning system

Requirements

- The recommended tire pressure is correctly set for the respective operating condition on each of the four wheels (→ page 601).

Restart the tire pressure loss warning system in the following situations:

- The tire pressure has changed.
- The wheels or tires have been changed or newly installed.

Driver display:

→ [⌂] » Service

▶ Select Tire Pressure and confirm with [OK].
The driver display shows the message Run Flat Indicator Active.

▶ Press the steering wheel button [OK] to initiate the restart.
The driver display shows the message Are the current pressure values OK?.

▶ Select Yes.

▶ Press the steering wheel button [OK] to confirm the restart.
The driver display shows the message Run Flat Indicator Restarted.

Be sure to also observe the following further related topics:

- Notes on tire pressure (→ page 601)

Loading the vehicle

Notes on the Tire and Loading Information placard

WARNING Risk of accident from overloaded tires

Overloaded tires may overheat and burst as a consequence. Overloaded tires can also impair the steering and handling characteristics and lead to brake failure.

- ▶ Observe the load rating of the tires.
- ▶ The load rating must be at least half the permissible axle load of the vehicle.
- ▶ Never overload the tires by exceeding the maximum load.

The Tire and Loading Information placard is on the B-pillar on the driver's side of the vehicle.

① Tire and Loading Information placard

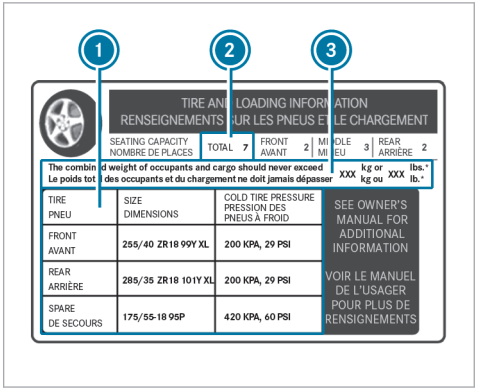

ⓘ The data shown in the illustration are sample data.

The Tire and Loading Information placard shows the following information:

- Maximum number of seats ② according to the maximum number of people permitted to travel in the vehicle.

- Maximum permissible load ③ comprises the gross weight of all vehicle occupants, luggage and additional load.
- Recommended tire pressure ① for cold tires. The recommended tire pressures are valid for the maximum permissible load and up to the maximum permissible vehicle speed.

Please also note:

- Information on permissible weights and loads on the vehicle identification plate (→ page 756).
- Information on the tire pressure in the tire pressure table (→ page 603).

Steps for determining the correct load limit

The following steps were developed according to the regulations of Title 49, Code of U.S. Federal Regulations, Part 575, which are binding on all manufacturers, and the National Traffic and Motor Vehicle Safety Act of 1966.

▶ (1): Locate the statement “The combined weight of occupants and cargo should never exceed XXX kg or XXX lbs.” on your vehicle's placard.

▶ (2): Determine the combined weight of the driver and passengers that will be riding in your vehicle.

▶ (3): Subtract the combined weight of the driver and passengers from XXX kg or XXX lbs.

▶ **(4):** The resulting figure equals the available amount of cargo and luggage load capacity. For example, if the "XXX" amount equals 1400 lbs. and there will be five 150 lb passengers in your vehicle, the amount of available cargo and luggage load capacity is 650 lbs. (1400 - 750 (5 x 150) = 650 lbs.)

▶ (5): Determine the combined weight of luggage and cargo being loaded on the vehicle. That weight may not safely exceed the available cargo and luggage load capacity calculated in Step 4.

▶ (6): If your vehicle will be towing a trailer, load from your trailer will be transferred to your vehicle. Consult this manual to determine how this reduces the available cargo and luggage load capacity of your vehicle.

ⓘ Not all vehicles are permitted to tow a trailer. Towing a trailer is only permitted if a trailer-hitch is installed. Please consult an authorized Mercedes-Benz dealer if you have any questions about towing a tralier with your vehicle.

Even if you have calculated the total load carefully, you should still make sure that the maximum permissible gross weight and the maximum gross axle weight rating of your vehicle are not exceeded. Details can be found on the vehicle identification plate.

▶ Have your loaded vehicle – including driver, occupants and load – weighed on a vehicle weighbridge.
The measured values may not exceed the maximum permissible values stated on the vehicle identification plate.

Calculation example for determining the maximum load

The following table shows examples of how to calculate total and cargo load capacities with varying seating configurations and different numbers and weights of vehicle occupants. The following exam-

ples use a maximum load of 1500 lbs (680 kg). **This is for illustration purposes only.** Make sure you are using the actual load limit for your vehicle stated on your vehicle's Tire and Loading Information Placard (→ page 608).

The higher the weight of all the vehicle occupants, the smaller the maximum load for luggage.

Step 1

	Example 1	Example 2
Combined maximum weight of vehicle occupants and load (data from the Tire and Loading Information Placard)	1500 lbs (680 kg)	1500 lbs (680 kg)

Step 2

	Example 1	Example 2
Number of persons in the vehicle (driver and occupants)	5	1
Occupant distribution	Front: 2 Rear: 3	Front: 1

	Example 1	Example 2
Weight of the vehicle occupants	Vehicle occupant 1: 150 lbs (68 kg) Vehicle occupant 2: 180 lbs (82 kg) Vehicle occupant 3: 160 lbs (73 kg) Vehicle occupant 4: 140 lbs (63 kg) Vehicle occupant 5: 120 lbs (54 kg)	Vehicle occupant 1: 200 lbs (91 kg)
Total weight of all vehicle occupants	750 lbs (340 kg)	200 lbs (91 kg)

Step 3

	Example 1	Example 2
Permissible load (maximum gross vehicle weight from the Tire and Loading Information Placard minus the total weight of all occupants)	1500 lbs (680 kg) - 750 lbs (340 kg) = 750 lbs (340 kg)	1500 lbs (680 kg) - 200 lbs (91 kg) = 1300 lbs (589 kg)

Tire labeling

Overview of tire labeling

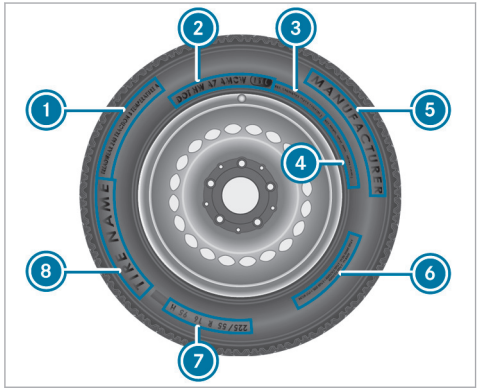

1. Uniform Tire Quality Grading Standards
2. DOT (Department of Transportation), (TIN) Tire Identification Number
3. Maximum tire load (→ page 614)
4. Maximum tire pressure (→ page 615)
5. Manufacturer
6. Tire characteristics (→ page 615)
7. Tire size designation, load-bearing capacity, speed rating and load index (→ page 615)
8. Tire name

ⓘ The data shown in the illustration is example data.

Tire quality grading

In accordance with the US Department of Transportation's "Uniform Tire Quality Grading Standards," tire manufacturers are required to grade their tires on the basis of the following three performance factors:

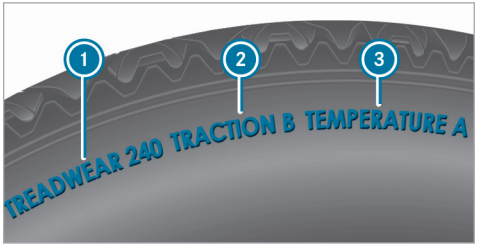

1. Tread wear grade
2. Traction grade
3. Temperature grade

ⓘ The data shown in the illustration is example data.

ⓘ The classification is not legally stipulated for Canada, but it is generally stated.

Tread wear grade

The treadwear grade is a comparative rating based on the wear rate of the tire when tested under controlled conditions on a specified government test course. For example, a tire graded 150 would wear one and one-half (1\1/2\) times as

well on the government course as a tire graded 100.

The relative performance of tires depends upon the actual conditions of their use, however, and may depart significantly from the norm due to variations in driving habits, service practices and differences in road characteristics and climate.

Traction grade

DANGER Risk of accident due to inadequate traction

The traction grade assigned to this tire is based on straight-ahead braking traction tests.

- Always adapt your driving style and drive at a speed to suit the prevailing traffic and weather conditions.

NOTE Damage to the drivetrain from wheelspin

- Avoid wheelspin.

The traction grades, from highest to lowest, are AA, A, B, and C. Those grades represent the tire's ability to stop on wet pavement as measured under controlled conditions on specified government test surfaces of asphalt and concrete. A tire marked C may have poor traction performance.

Temperature grade

WARNING Risk of accident from tire overheating and tire failure

Excessive speed, underinflation, or excessive loading, either separately or in combination, can cause excessive heat build-up and possible tire failure.

- Observe the recommended tire pressure.
- Regularly check the pressure of all the tires.
- Adjust the tire pressure, if necessary.

The temperature grades are A (the highest), B, and C, representing the tire's resistance to the generation of heat and its ability to dissipate heat when tested under controlled conditions on a specified indoor laboratory test wheel. Sustained high temperature can cause the material of the tire to degenerate and reduce tire life, and excessive temperature can lead to sudden tire failure. The grade C corresponds to a level of performance which all passenger car tires must meet under the Federal Motor Safety Standard No. 109. Grades B and A represent higher levels of performance on the laboratory test wheel than the minimum required by law.

DOT, Tire Identification Number (TIN)

US tire regulations stipulate that every tire manufacturer or retreader must imprint a TIN in or on the side wall of each tire produced.

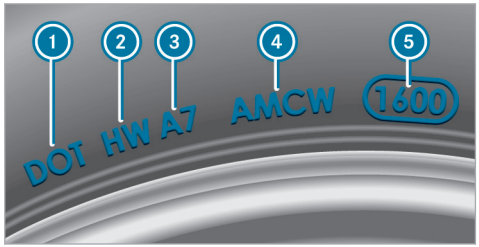

ⓘ The data shown in the illustration is example data.

The TIN is a unique identification number to identify tires and comprises the following:

- **DOT (Department of Transportation):** tire symbol marks ① indicating that the tire complies with the requirements of the US Department of Transportation.
- **Manufacturer identification code:** manufacturer identification code ② contains details of the tire manufacturer. New tires have a code with two symbols. Retreaded tires have a code with four symbols. Further information on retreaded tires (→ page 620).
- **Tire size:** identifier ③ describes the tire size.
- **Tire type code:** tire type code ④ can be used by the manufacturer as a code to describe specific characteristics of the tire.
- **Manufacturing date:** manufacturing date ⑤ provides information about the age of a tire. The 1st and 2nd positions represent the calendar week and the 3rd and 4th positions state the year of manufacture (e.g. "3208" represents the 32nd week of 2008).

Information on the maximum tire load

⚠ **WARNING** Risk of accident from overloaded tires

Overloaded tires may overheat and burst as a consequence. Overloaded tires can also impair the steering and handling characteristics and lead to brake failure.

- ▶ Observe the load rating of the tires.
- ▶ The load rating must be at least half the permissible axle load of the vehicle.
- ▶ Never overload the tires by exceeding the maximum load.

ⓘ The data shown in the illustration is example data.

Maximum tire load ① is the maximum permissible weight for which the tire is approved.

Do not overload the tires by exceeding the specified load limit. The maximum permissible load can be found on the vehicle's Tire and Loading Information placard on the B-pillar on the driver's side (→ page 608).

Specifications for maximum tire pressure

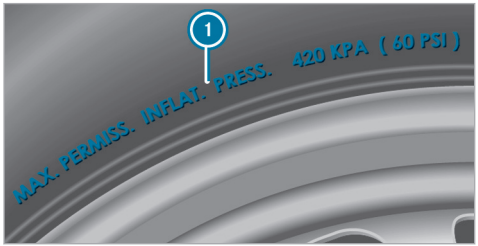

ⓘ The data shown in the illustration is example data.

Never exceed maximum tire pressure ① specified for the tire. Always observe the recommended tire pressure for your vehicle when adjusting the tire pressure (→ page 603).

Information on tire characteristics

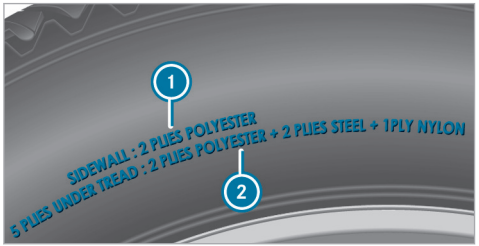

ⓘ The data shown in the illustration is example data.

This information describes the type of tire cord and the number of layers in side wall ① and under tire tread ②.

Tire size indication, load-bearing capacity, speed rating and load index

⚠ **WARNING** Risk of injury through exceeding the specified tire load-bearing capacity or the permissible speed rating

Exceeding the specified tire load rating or the permissible speed rating may lead to tire damage and to the tires bursting.

- ▶ Therefore, only use tire types and sizes approved for your vehicle model.
- ▶ Observe the tire load rating and speed rating required for your vehicle.

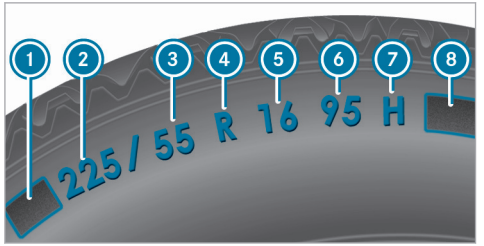

1. Preceding letter
2. Nominal tire width in millimeters
3. Aspect ratio in %
4. Tire code
5. Rim diameter
6. Load-bearing index
7. Speed rating
8. Load index

ⓘ The data shown in the illustration is example data.

Information about reading tire data can be obtained from any qualified specialist workshop.

Preceding letter (1):

- Without: passenger vehicle tire according to European manufacturer standards.
- "P": passenger vehicle tire according to US manufacturer standards
- "LT": light truck tire according to US manufacturer standards
- "T": compact emergency spare wheel with high tire pressure only designed for temporary use in an emergency.

Aspect ratio (3):

Ratio between section height and tire width in percent (section height divided by tire width).

Tire code (4) (tire type):

- "R" radial tire
- "D": bias ply tire
- "B": bias belted tire
- "ZR“: radial tire with a permissible maximum speed above 149 mph (240 km/h) (optional)

Rim diameter (5):

The diameter of the bead seat (not the diameter of the rim flange). The rim diameter is specified in inches (in).

Load-bearing index (6):

Numerical code that specifies the maximum load-bearing capacity of a tire (e.g. "91" corresponds to 1,356 lbs (615 kg)).

The load-bearing capacity of the tire must be at least half the permissible axle weight of the vehicle. Do not overload the tires by exceeding the specified load limit.

See also:

- Maximum permissible load on the Tire and Loading Information Placard (→ page 608)
- Maximum tire load (→ page 614)
- Load index

Speed rating (7):

Indicates the approved maximum speed of the tire.

ⓘ An electronic speed limiter prevents your vehicle from exceeding a speed of 130 mph (210 km/h).

Make sure that your tires have the required speed rating. You can obtain information on the required speed rating from a Mercedes-Benz Service Center.

Summer tires

Index	Speed rating
Q	up to 100 mph (160 km/h)
R	up to 106 mph (170 km/h)
S	up to 112 mph (180 km/h)
T	up to 118 mph (190 km/h)
H	up to 130 mph (210 km/h)
V	up to 149 mph (240 km/h)
W	up to 168 mph (270 km/h)

Index	Speed rating
Y	up to 186 mph (300 km/h)
ZR...Y [1]	up to 186 mph (300 km/h)
ZR... (..Y) [1]	over 186 mph (300 km/h)
ZR [1]	over 149 mph (240 km/h)

- Specifying the speed rating as "ZR" index in the tire code ④ is optional for tires up to 186 mph (300 km/h).
- If your tire code ④ includes "ZR" and there is no speed rating ⑦, ask the tire manufacturer what the maximum permissible speed is.
- If the load-bearing index ⑥ and speed rating ⑦ are in brackets, the permissible maximum speed of the tire is above 186 mph (300 km/h). To find out the maximum permissible speed, ask the tire manufacturer.

All-weather tires and winter tires

Index	Speed rating
Q M+S[2]	up to 100 mph (160 km/h)
T M+S[2]	up to 118 mph (190 km/h)
H M+S[2]	up to 130 mph (210 km/h)
V M+S[2]	up to 149 mph (240 km/h)

Winter tires bear the ❄ snowflake symbol and fulfill the requirements of the Rubber Manufacturers Association (RMA) and the Rubber Association of Canada (RAC) regarding the tire traction on snow.

Load index ⑧:

- No specification given: standard load (SL) tire
- "XL" or "Extra Load": extra load tire or reinforced tire
- "Light Load": light load tire

1 "ZR" stated in the tire code.

2 Or "M+S ❄ " for winter tires.

- "C“, "D“, "E“: load range that depends on the maximum load that the ire can carry at a certain pressure .

Definition of terms for tires and loading

Tire structure and characteristics: describes the number of layers or the number of rubber-coated belts in the tire contact surface and the tire wall. These are made of steel, nylon, polyester and other materials.

Bar: metric unit for tire pressure. 14.5038 pounds per square inch (psi) and 100 kilopascal (kPa) is the equivalent of one bar.

DOT (Department of Transportation): DOT-marked tires fulfill the requirements of the US Department of Transportation.

Average weight of the vehicle occupants: the number of vehicle occupants for which the vehicle is designed, multiplied by 150 lb (68 kg).

Uniform tire quality grading standards: a uniform standard to grade the quality of tires with regard to tread quality, tire traction and temperature characteristics. The quality grading assessment is made by the manufacturer following specifications from the U.S. government. The quality grade of a tire is imprinted on the side wall of the tire.

Recommended tire pressure: the recommended tire pressure is the tire pressure specified for the tires fitted to the vehicle at the factory.

The tire and load information table contains the recommended tire pressure for cold tires, the maximum permissible load and the maximum permissible vehicle speed.

The tire pressure table contains the recommended tire pressure for cold tires under various operating conditions, i.e. loading and/or speed of the vehicle.

Increased vehicle weight due to optional equipment: the combined weight of all standard and optional equipment available for the vehicle, regardless of whether it is actually installed on the vehicle or not.

Rim: the part of the wheel on which the tire is mounted.

GAWR (Gross Axle Weight Rating): the GAWR is the maximum gross axle weight rating. The actual load on an axle must never exceed the gross axle weight rating. The gross axle weight rating can be found on the vehicle identification plate on the B-pillar on the driver's side.

Speed rating: the speed rating is part of the tire identification. It specifies the speed range for which a tire is approved.

GVW (Gross Vehicle Weight): the gross vehicle weight comprises the weight of the vehicle including fuel, tools, spare wheel, fitted accessories, occupants, luggage and the trailer tongue weight, if applicable. The gross vehicle weight must not exceed the gross vehicle weight rating GVWR as specified on the vehicle identification plate on the B-pillar on the driver's side.

GVWR (Gross Vehicle Weight Rating): the GVWR is the maximum permitted gross weight of the fully laden vehicle (weight of the vehicle including all accessories, occupants, fuel, luggage and the trailer tongue weight if applicable). The gross vehicle weight rating is specified on the vehicle identification plate on the B-pillar on the driver's side.

Maximum weight of the laden vehicle: the maximum weight is the sum of the unladen weight of the vehicle, the weight of the accessories, the

maximum load and the weight of optional equipment installed at the factory.

Kilopascal (kPa): metric unit for tire pressure. 6.9 kPa corresponds to 1 psi. Another unit for tire pressure is bar. 100 kilopascal (kPa) equals 1 bar.

Load index: in addition to the load-bearing index, the load index may also be imprinted on the side wall of the tire. This specifies the load-bearing capacity of the tire more precisely.

Unladen weight: the weight of a vehicle with standard equipment including the maximum capacity of fuel, service fluids and coolant. It also includes the air conditioning system and optional equipment if these are installed in the vehicle, but does not include passengers or luggage.

Maximum tire load: the maximum tire load is the maximum permissible weight in kilograms or lbs for which a tire is approved.

Maximum permissible tire pressure: maximum permissible tire pressure for one tire.

Maximum load on one tire: maximum load per tire. This is calculated by dividing the maximum axle load of one axle by two.

PSI (pounds per square inch): standard unit of measurement for tire pressure.

Aspect ratio: ratio between tire height and tire width in percent.

Tire pressure: pressure inside the tire applying an outward force to every square inch of the tire. The tire pressure is specified in pounds per square inch (psi), in kilopascals (kPa) or in bar. The tire pressure should only be corrected when the tires are cold.

Cold tire pressure: the tires are cold when the vehicle has been parked for at least 3 hours without direct sunlight on the tires, or the vehicle has been driven for less than 1 mile (1.6 km).

Tire contact surface: the part of the tire that comes into contact with the road.

Tire bead: the purpose of the tire bead is to ensure that the tire sits securely on the wheel rim. There are several wire cores in the tire bead to prevent the tire from changing length on the wheel rim.

Side wall: the part of the tire between the tread and the tire bead.

Weight of optional equipment: the combined weight of the optional equipment weighing more than the replaced standard parts and more than 5 lbs (2.3 kg). This optional equipment, such as high-performance brakes, level control system, a roof luggage rack or high-performance batteries, is not included in the unladen weight and the weight of the accessories.

TIN (Tire Identification Number): a unique identification number which can be used by a tire manufacturer to identify tires, for example in a product recall, and thus identify the purchasers. The TIN is made up of the manufacturer's identity code, tire size, tire type code and the manufacturing date.

Load-bearing index: the load-bearing index is a code that contains the maximum load-bearing capacity of a tire.

Traction: traction is the grip resulting from friction between the tire and the road surface.

Wear indicator: narrow bars (tread wear bars) that are distributed over the tire contact surface. If the tire tread is level with the bars, the wear limit of 1/16 in (1.6 mm) has been reached.

Distribution of vehicle occupants: distribution of vehicle occupants over designated seat positions in a vehicle.

Maximum permissible payload weight: nominal load and luggage load plus 150 lb (68 kg) multiplied by the number of seats in the vehicle.

Changing a wheel

Notes on selecting, mounting and replacing tires

WARNING Risk of accident due to incorrect wheel and tire dimensions

If wheels and tires of the wrong size are installed, the service brakes or components in the brake system and in the wheel suspension may be damaged.

▶ Always replace wheels and tires with ones that fulfill the specifications of the original part.

For wheels, pay attention to the following:

- Designation
- Type

For tires, pay attention to the following:

- Designation
- Manufacturer
- Type

WARNING Risk of injury through exceeding the specified tire load-bearing capacity or the permissible speed rating

Exceeding the specified tire load rating or the permissible speed rating may lead to tire damage and to the tires bursting.

▶ Therefore, only use tire types and sizes approved for your vehicle model.

▶ Observe the tire load rating and speed rating required for your vehicle.

NOTE Vehicle and tire damage caused by non-approved tire types and sizes

For safety reasons, only use tires, wheels and accessories which have been specially approved by Mercedes-Benz for your vehicle.

These tires are specially adapted to the active safety systems, such as ABS, ESP® and 4MATIC, and marked as follows:

- MO = Mercedes-Benz Original
- MOE = Mercedes-Benz Original Extended (tires with run-flat characteristics for certain wheels only)
- MO1 = Mercedes-Benz Original (only certain AMG tires)

Otherwise, certain properties, such as driving characteristics, vehicle noise emissions, consumption, etc. could be adversely affected. Furthermore, other tire sizes could result in the tires rubbing against the body and axle components when loaded. This could result in damage to the tire or the vehicle.

Only use tires, wheels and accessories that have been checked and recommended by Mercedes-Benz.

NOTE Risk to driving safety from retreaded tires

Retreaded tires are neither tested nor recommended by Mercedes-Benz, since previous damage cannot always be detected on retreaded tires.

For this reason driving safety cannot be guaranteed.

▶ Do not use used tires if you have no information about their previous usage.

NOTE Possible wheel and tire damage when driving over obstacles

Large wheels have a smaller section width. As the section width decreases, the risk of wheels and tires being damaged when driving over obstacles increases.

▶ Avoid obstacles or drive especially carefully.

▶ Reduce your speed when driving over curbs, speed bumps, manhole covers and potholes.

▶ Avoid particularly high curbs.

NOTE Possible wheel and tire damage when parking on curbs or in potholes

Parking on curbs or in potholes can damage the wheels and tires.

▶ Only park on as level a surface as possible.

▶ Avoid curbs and potholes when parking.

NOTE Damage to electronic components due to the use of mounting tools

Vehicles with a tire pressure monitoring system: there are electronic components in the wheel.

Using mounting tools in the area of the valve may damage the electronic components.

▶ Tire mounting tools should not be used in the area of the valve.

▶ Always have tires changed at a qualified specialist workshop.

NOTE Damage to summer tires at low ambient temperatures

At low ambient temperatures, tears could form when driving with summer tires, causing permanent damage to the tires.

▶ At temperatures below 45 °F (7 °C) use M+S tires.

Accessory parts which are not approved for your vehicle by Mercedes-Benz, or which are not used correctly, can impair the operating safety.

Before purchasing and using non-approved accessories, visit a qualified specialist workshop and inquire about:

- Suitability
- Legal stipulations
- Factory recommendations

WARNING Risk of accidents with sports tires

The special tire tread in combination with the optimized tire compound means that the risk of skidding or hydroplaning on wet roads is increased.

In addition, the tire grip is greatly reduced at a low outside temperature and tire running temperature.

- ▶ Switch on ESP® and adapt your driving style accordingly.
- ▶ Use M+S tires at outside temperatures of less than 45°F (7°C).
- ▶ Only use tires suitable for the intended use.

Observe the following when selecting, mounting and replacing tires:

- The use of certain tire types in certain regions and areas of operation can be advisable.
- Only use tires and wheels of the same type (summer tires, winter tires, MOExtended tires) and of the same make.
- Only install wheels of the same size on one axle (left and right).

  It is only permissible to install a different wheel size in the event of a flat tire in order to drive to the specialist workshop.
- **Vehicles with tire pressure monitoring system:** all installed wheels must be equipped with functioning sensors for the tire pressure monitoring system.
- At temperatures below 45 °F (7 °C), use winter tires or all-season tires marked M+S for all wheels.

  Winter tires provide the best possible grip in wintry road conditions.
- For M+S tires, only use tires with the same tread pattern.
- Observe the maximum permissible speed for the fitted M+S tires.

  If the tires' maximum speed is below that of the vehicle, this must be indicated by an appropriate label in the driver's field of vision.
- Break in new tires at moderate speeds for the first 60 miles (100 km).
- Replace the tires after six years at the latest, regardless of wear.
- **When replacing with tires without run-flat characteristics:** Vehicles with MOExtended tires are not equipped with a TIREFIT kit at the factory. Equip the vehicle with a TIREFIT kit after switching to tires without run-flat characteristics, e.g. winter tires.

For more information on wheels and tires, contact a qualified specialist workshop.

Vehicles with an AMG Driver's Package

WARNING Risk of accident caused by non-approved tire types

If you use tire types that have not been adapted to changes made to the factory speed limit, this can have the following consequences:

- The tires are not suitable for high speeds and the corresponding driving dynamics.
- The tires wear unevenly and affect the roadworthiness of the vehicle.

- ABS, ESP® and cruise control operation are restricted.

This can jeopardize road safety.

▶ Only use tire types that have been approved for the maximum permissible speed set and the vehicle.

Notes on rotating wheels

⚠ **WARNING** Risk of injury through different wheel sizes

Rotating the front and rear wheels can severely impair the driving characteristics.

The wheel brakes or suspension components may also be damaged.

▶ Rotate front and rear wheels only if the wheels and tires are of the same dimensions.

Observe the instructions and safety notes on "Changing a wheel" (→ page 620).

The front and rear wheels are subject to different wear:

- Front wheels wear more on the tire shoulder
- Rear wheels wear more in the center of the tire

Do not drive with tires that have too little tread depth. This significantly reduces traction on wet roads (hydroplaning).

On vehicles that have the same size front and rear wheels, rotate the wheels according to the intervals in the tire manufacturer's warranty booklet in your vehicle documents. If this is not available, rotate the tires every 3,000 to 6,000 miles (5,000 to 10,000 km), depending on wear. Do not change the direction of wheel rotation.

Notes on storing wheels

When storing wheels, observe the following notes:

- After removing wheels, store them in a cool, dry and preferably dark place.
- Protect the tires from contact with oil, grease or fuel.

Overview of the tire-change tool kit

With the exception of some country-specific variants, vehicles are not equipped with a tire-change tool kit. For more information on which tire-changing tools are required and approved for performing a wheel change on your vehicle, consult a qualified specialist workshop.

Required tire-change tool kit may include, forexample:

- Jack
- Chock
- Lug wrench
- Alignment bolt

The tire-change tool kit ① is located under the cargo floor.

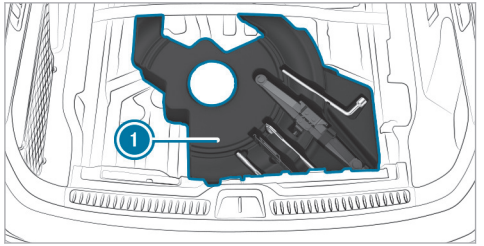

The tire-change tool kit includes the following:

- Jack
- Lug wrench
- Wheel studs
- Where applicable, extension piece for wheel studs (depending on vehicle version)
- Folding chock
- Ratchet wrench
- Alignment bolt

Preparing the vehicle for a wheel change

Requirements:

- The vehicle is not on a slope.
- The vehicle is on solid, non-slippery and level ground.
- The required tire-change tool kit is available.

ⓘ If your vehicle is not equipped with the tire-change tool kit, consult a qualified specialist workshop to find out about suitable tools.

▶ Apply the electric parking brake manually.

▶ Move the front wheels to the straight-ahead position.

▶ Shift the transmission to position P.

▶ Switch off the vehicle.

▶ Make sure that the vehicle cannot be started.

▶ Place chocks or other suitable items under the front and rear of the wheel that is diagonally opposite the wheel you wish to change.

▶ Unload the vehicle.

Removing and fitting wheel trim/hub caps

Requirements

- The vehicle is prepared for a wheel change (→ page 624).

Plastic hub cap
Removal:

▶ Turn the center cover of the hub cap anti-clockwise and remove the hub cap.

Installation:

▶ Ensure that the center cover of the hub cap is turned anti-clockwise.

▶ Position hub cap and turn the center cover clockwise until hub cap engages physically and audibly.

Aluminum hub cap

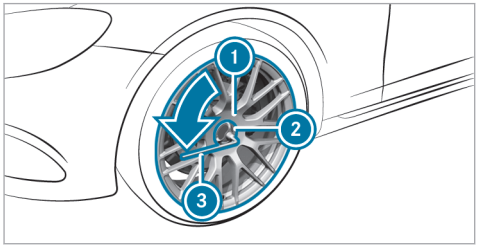

Removal:

- ▶ Position socket ② from the tire-change tool kit on the hub cap ①.
- ▶ Attach wheel wrench ③ to the socket ②.
- ▶ Using the wheel wrench ③, turn the hub cap ① counterclockwise and remove it.

Installation:

- ▶ Follow the steps above in reverse order.
- ⓘ **Specified tightening torque:** 18 lb-ft (25 Nm).

Raising the vehicle when changing a wheel

Requirements

- There are no persons in the vehicle.
- The vehicle has been prepared for a wheel change (→ page 624).
- The wheel trims and hub caps have been removed (→ page 624).

Important notes on using the jack:

- Use only a vehicle-specific jack that has been approved by Mercedes-Benz to raise the vehicle.
- The jack is only designed for raising and holding the vehicle for a short time while a wheel is being changed and not for maintenance work under the vehicle.
- The jack must be placed on a firm, flat and non-slip surface. If necessary, use a large, flat, load-bearing, non-slip underlay.
- The foot of the jack must be positioned vertically under the jack support point.

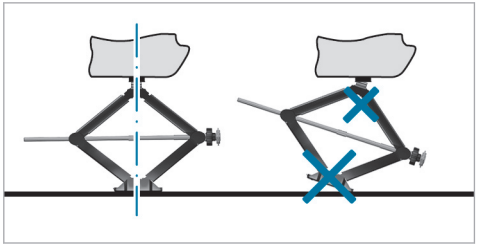

Rules of conduct when the vehicle is raised:

- Never place your hands or feet under the vehicle.
- Never lie under the vehicle.
- Do not start the vehicle and do not release the electric parking brake.
- Do not open or close any doors or the tailgate.

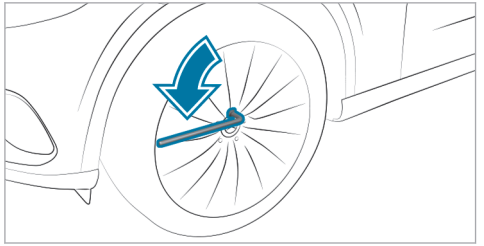

▶ Using the lug wrench, loosen the wheel bolts on the wheel you wish to change by about one full turn. Do not unscrew the screws completely.

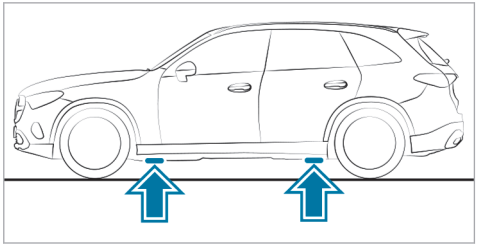

Position of the jack support points

⚠ WARNING Risk of injury from incorrect positioning of the jack

If you do not position the jack correctly at the appropriate jacking point of the vehicle, the jack could tip with the vehicle raised.

▶ Only position the jack at the appropriate jacking point of the vehicle. The base of the jack must be positioned vertically under the jacking point of the vehicle.

! NOTE Damage to the vehicle due to the jack

If you do not position the jack at the jack support points provided for this purpose, you could damage your vehicle.

▶ Only position the jack at the jack support points provided for this purpose.

▶ Take the ratchet out of the tire-change tool kit and place it on the hexagon nut of the jack so that the letters "AUF" are visible.

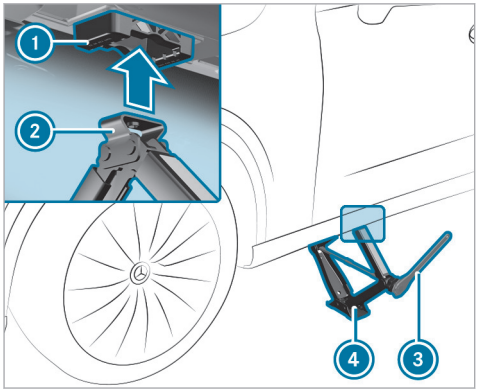

- Position support ② of jack ④ on jack support point ①.
- Turn ratchet ③ clockwise until support ② sits completely on jack support point ① and the base of the jack lies evenly on the ground.
- Turn ratchet ③ until the tire is raised a maximum of 1.2 in (3 cm) from the ground.
- Loosen and remove the wheel (→ page 627).

Removing a wheel

Requirements

- The vehicle is raised (→ page 625).

When changing a wheel, avoid applying any force to the brake discs, as this could impair the level of comfort when braking.

! **NOTE** Damage to the wheels' plastic elements when changing a wheel

Plastic elements on wheels may be damaged when removing and repositioning the wheel.

- Do not raise the wheels by the plastic elements when removing and repositioning.

! **NOTE** Damage to threading from dirt on wheel bolts

- Do not place wheel bolts in sand or on a dirty surface.

- Unscrew the uppermost wheel bolt completely.

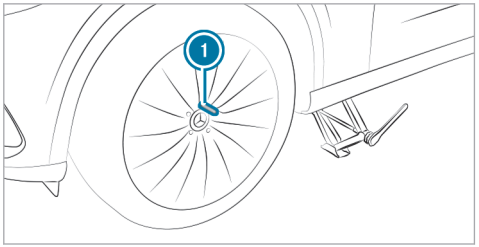

- Screw centering pin ① into the thread instead of the wheel bolt.
- Unscrew the remaining wheel bolts completely.
- Remove the wheel.
- Install the new wheel (→ page 627).

Fitting a new wheel

Requirements

- The wheel to be changed is removed and the centering pin is screwed in (→ page 627).

WARNING Risk of accident from losing a wheel

Oiled, greased or damaged wheel bolt/wheel nut threads or wheel hub/wheel mounting bolt threads can cause the wheel bolts/wheel nuts to come loose.

- Never oil or grease the threads.
- In the event of damage to the threads, contact a qualified specialist workshop immediately.
- Have the damaged wheel bolts or damaged hub threads replaced.
- Do not continue driving.

- Observe the information on the choice of tires (→ page 620).

For tires with a specified direction of rotation, an arrow on the side wall of the tire indicates the correct direction of rotation. Observe the direction of rotation when fitting.

Note on AMG vehicles:

NOTE Damage to the ceramic brake disc when changing a wheel

Mercedes-AMG vehicles with ceramic brake discs: during removal and repositioning of the wheel, the wheel rim can strike the ceramic-brake disc and damage it.

- Take particular care.
- Ask another person for assistance or use a second alignment bolt.

NOTE Damage to the wheels' plastic elements when changing a wheel

Plastic elements on wheels may be damaged when removing and repositioning the wheel.

- Do not raise the wheels by the plastic elements when removing and repositioning.

- Slide the wheel to be mounted onto the centering pin and push it on.

WARNING Risk of injury from tightening wheel bolts and nuts

If you tighten the wheel bolts or wheel nuts when the vehicle is raised, the jack could tip.

- Only tighten wheel bolts or wheel nuts when the vehicle is on the ground.

- Be sure to observe the instructions and safety notes on "Changing a wheel" (→ page 620).
- For safety reasons, only use wheel bolts which have been approved by Mercedes-Benz and for the wheel in question.

NOTE Damage to paintwork of the wheel rim when screwing in the first wheel bolt

If the wheel has too much play when screwing in the first wheel bolt, the wheel rim paint can be damaged.

- Press the wheel firmly against the wheel hub when screwing in the first wheel bolt.

▶ Tighten the wheel bolts evenly in a diagonal pattern in the order indicated until they are finger-tight.

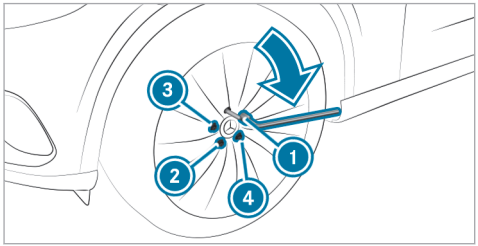

▶ Unscrew and remove the centering pin.

▶ Tighten the last wheel bolt until it is finger-tight.

▶ If the collapsible spare wheel has been fitted, inflate the collapsible emergency spare wheel (→ page 632).

▶ Lower the vehicle and tighten wheel bolts with the prescribed tightening torque. (→ page 629).

Lowering the vehicle after a wheel change

Requirements

- The new wheel has been installed (→ page 627).

! **NOTE** Damage to the emergency spare wheel when lowering the vehicle

Lowering the vehicle without previously inflating the emergency collapsible spare wheel can damage its rim.

▶ Inflate the emergency collapsible spare wheel using the tire inflation compressor before lowering the vehicle.

! **NOTE** Risk of vehicle jack becoming trapped by the AIRMATIC system

If the AIRMATIC system has released air when raising the vehicle, the jack can become trapped when the vehicle is lowered.

▶ Start the engine. This adapts the vehicle level.

▶ Remove the jack from under the vehicle.

▶ **To lower the vehicle:** place the ratchet onto the hexagon nut of the jack so that the letters "AB" are visible and turn counter-clockwise.

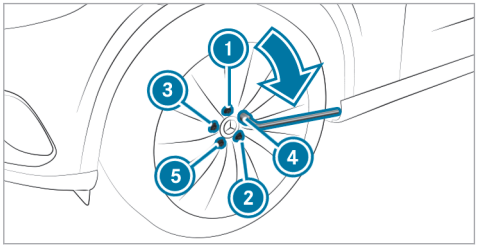

▶ Tighten the wheel bolts evenly in a diagonal pattern in the order indicated ① to ⑤ with an initial maximum force of 59 lb-ft (80 Nm).

▶ Tighten the wheel bolts evenly in a diagonal pattern in the order indicated ① to ⑤ with the specified tightening torque of 111 lb-ft (150 Nm).

WARNING Risk of accident due to incorrect tightening torque

The wheels could come loose if the wheel bolts or wheel nuts are not tightened to the prescribed torque.

- Ensure that the wheel bolts or wheel nuts are tightened to the prescribed tightening torque.
- If you are not sure, do not move the vehicle. Contact a qualified specialist workshop and have the tightening torque checked immediately.

- Check the tire pressure of the newly installed wheel and adjust it if necessary.

ⓘ The following does not apply if the new wheel is an emergency spare wheel.

- **Vehicles with a tire pressure loss warning system:** restart the tire pressure loss warning system (→ page 607).
- **Vehicles with a tire pressure monitoring system:** restart the tire pressure monitoring system (→ page 606).

Emergency spare wheel

Notes on the emergency spare wheel

WARNING Risk of accident caused by incorrect wheel and tire dimensions

The wheel or tire sizes and the tire type of the emergency spare wheel or spare wheel and the wheel to be replaced may differ. The emergency spare wheel or spare wheel can significantly impair driving characteristics of the vehicle.

To prevent hazardous situations:

- Drive carefully.
- Never install more than one emergency spare wheel or spare wheel that differs in size.
- Only use an emergency spare wheel or spare wheel briefly.
- Do not deactivate ESP®.
- Have the emergency spare wheel or spare wheel of a different size replaced at the nearest qualified specialist workshop. The new wheel must have the correct dimensions.

ⓘ The emergency spare wheel is secured in the load compartment under the load compartment floor.

Observe the following notes on fitting an emergency spare wheel:

- The maximum permissible speed with an emergency spare wheel fitted is 50 mph (80 km/h).
- Do not mount snow chains on the emergency spare wheel.
- Replace the emergency spare wheel after six years at the latest, regardless of wear.
- Use the included wheel bolts of the emergency spare.
- Check the tire pressure of the fitted emergency spare wheel. Correct the pressure as necessary.

ⓘ The specified tire pressure is stated on the label of the emergency spare wheel.

ⓘ **Vehicles with tire pressure loss warning system:** if an emergency spare wheel is fitted, the tire pressure loss warning system cannot function reliably. Only restart the system again when the emergency spare wheel has been replaced with a new wheel.
Vehicles with tire pressure monitoring system: if an emergency spare wheel is fitted, the tire pressure monitoring system cannot function reliably. For a few minutes after an emergency spare wheel is fitted, the system may still display the tire pressure of the removed wheel. Only restart the system again when the emergency spare wheel has been replaced with a new wheel.

Be sure to also observe the following further related subjects:

- Notes on tire pressure (→ page 601)
- Tire and Loading Information Placard (→ page 608)
- Tire pressure table (→ page 603)
- Notes on mounting tires (→ page 620)
- Fitting an emergency spare wheel (→ page 624)

Collapsible spare wheel

Notes on the collapsible spare wheel

ⓘ The collapsible spare wheel is only available in AMG vehicles.

⚠ **WARNING** Risk of accident caused by incorrect wheel and tire dimensions

The wheel or tire sizes and the tire type of the emergency spare wheel or spare wheel and the wheel to be replaced may differ. The emergency spare wheel or spare wheel can significantly impair driving characteristics of the vehicle.

To prevent hazardous situations:

- ▶ Drive carefully.
- ▶ Never install more than one emergency spare wheel or spare wheel that differs in size.
- ▶ Only use an emergency spare wheel or spare wheel briefly.
- ▶ Do not deactivate ESP®.
- ▶ Have the emergency spare wheel or spare wheel of a different size replaced at the nearest qualified specialist workshop. The new wheel must have the correct dimensions.

⚠ **WARNING** Risk of injury- or death due to unsecured collapsible spare wheel

If the collapsible spare wheel is not secured correctly, it may shift, tip over or be thrown.

This can result in the vehicle occupants being seriously injured.

- ▶ Always store the collapsible spare wheel in the emergency spare wheel bag.
- ▶ Always ensure that the lashing straps on the emergency spare wheel bag are securely fastened to the rear tie-down eyelets on the load compartment floor and firmly tightened.

ⓘ The collapsible spare wheel is secured in the spare wheel bag in the load compartment.

ⓘ The collapsible spare wheel is only available in certain countries.

Observe the following notes on fitting an emergency spare wheel:

- The collapsible spare wheel is an emergency spare wheel that is only suitable for temporary use under restricted conditions following a flat tire, e.g. to the nearest workshop.
- The side walls of the tire are folded when uninflated. Before using the collapsible spare wheel, inflate it with the compressor supplied.
- Check the tire pressure of the installed collapsible spare wheel and adjust it as necessary.
- The maximum permissible speed with a fitted collapsible spare wheel is 50 mph (80 km/h).
- Do not fit the collapsible spare wheel with snow chains.
- Replace the collapsible spare wheel after six years at the latest, regardless of wear.

ⓘ **Vehicles with a tire pressure monitoring system:** if a collapsible spare wheel is fitted the tire pressure monitoring system cannot function reliably. The system may still display the tire pressure of the removed wheel for a few minutes. Only restart the system when the collapsible spare wheel has been replaced with a new wheel.

Be sure to also observe the following further related topics:

- Notes on tire pressure (→ page 601)
- Tire pressure table (→ page 603)

Inflating the collapsible spare wheel

! **NOTE** Damage to the collapsible spare wheel when lowering the vehicle

Lowering the vehicle without previously inflating the collapsible spare wheel can damage its rim.

▶ Inflate the collapsible spare wheel using the tire inflation compressor before lowering the vehicle.

! **NOTE** Overheating due to the tire inflation compressor running too long

▶ Do not run the tire inflation compressor for longer than eight minutes without interruption.

Requirements

- Comply with the manufacturer's safety notes on the sticker on the tire inflation compressor and on the tire sealant bottle.
- Mount the collapsible spare wheel as described (→ page 624).

  The collapsible spare wheel must be installed before it is inflated.
- Remove the tire inflation compressor from the stowage space under the load compartment floor (→ page 54).

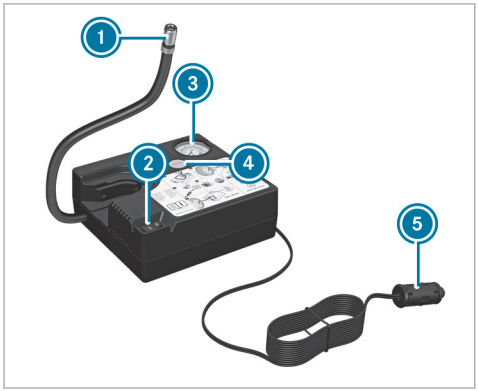

- Pull the connector ⑤ and filling hose out of the tire inflation compressor housing.
- Unscrew the cap from the valve on the collapsible spare wheel.
- Screw the union nut ① of the filling hose onto the valve.
  If necessary, first unscrew the connector from the union nut.
- Make sure the on/off switch ② of the tire inflation compressor is set to **0**.
- Insert the connector ⑤ into a socket in your vehicle.
  - 12-V-socket: (→ page 187)
  - Observe the notes on sockets: (→ page 187)
- Switch on the vehicle.
- Press the on/off switch ② on the tire inflation compressor to **I**.
  The tire inflation compressor is switched on. The tire is inflated. The tire pressure is shown on the manometer ③.
- Inflate the tire to the specified tire pressure. The specified tire pressure is printed in yellow on the collapsible spare wheel.
- When the specified tire pressure has been reached, press the on/off switch ② on the tire inflation compressor to **0**.
  The tire inflation compressor is switched off.
- Switch off the vehicle.
- If the tire pressure is higher than the specified pressure, press the pressure release valve button ④ until the correct tire pressure has been reached.
- Unscrew the union nut ① of the filling hose from the valve.
  If necessary, screw the connector back onto the union nut.
- Screw the valve cap of the collapsible spare wheel onto the valve again.
- Stow the connector ⑤ and filling hose in the lower section of the compressor housing.
- Stow the tire inflation compressor in the vehicle.

Deflate and store collapsible spare wheel

Requirements
The collapsible spare wheel is removed.

Deflate collapsible spare wheel

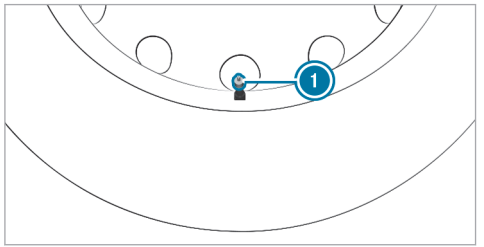

▶ Remove valve cap 1.

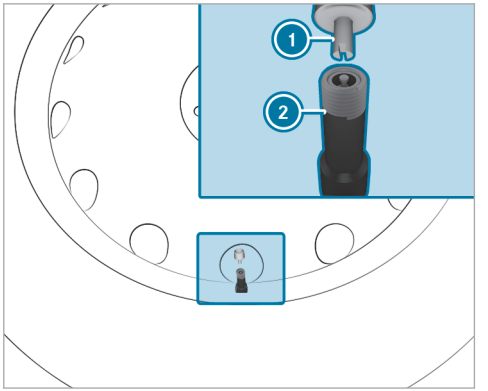

▶ Insert valve cap 1 into the valve with the opposite side 2.

▶ Remove the valve from the collapsible spare wheel by rotating to the left and let the air out until the collapsible spare wheel is completely deflated.

ⓘ In doing so, observe that the valve does not come out due to the air pressure of the collapsible spare wheel.

F254 0138 13

Store collapsible spare wheel

▶ Fold tire and store collapsible spare wheel in the emergency spare wheel bag.

▶ With the aid of the valve cap, screw the valve back into the collapsible spare wheel by rotating it to the right.

▶ Screw the valve cap onto the valve.

▶ Close emergency spare wheel bag.

Secure the collapsible spare wheel bag

Emergency spare wheel bag with two straps

▶ Secure the emergency spare wheel bag in the load compartment using the two rear tie-down eyes.

Emergency spare wheel bag with four straps

▶ Secure the emergency spare wheel bag in the load compartment using the front and two rear tie-down eyes.

Notes on technical data

The data stated only applies to vehicles with standard equipment. You can obtain further information from an authorized Mercedes-Benz Center.

Vehicle electronics

Two-way radios

Notes on installing two-way radios

WARNING Risk of accident due to improper work on two-way radios

If two-way radios are manipulated or retrofitted incorrectly, the electromagnetic radiation from the two-way radios can interfere with the vehicle electronics and jeopardize the operating safety of the vehicle.

▶ You should have all work on electrical and electronic components carried out at a qualified specialist workshop.

WARNING Risk of accident due to improper operation of two-way radios

If you use two-way radios in the vehicle improperly, their electromagnetic radiation can disrupt the vehicle's electronics. This is the case in the following situations, in particular:

- The two-way radio is not connected to an exterior antenna.
- The exterior antenna is installed incorrectly or is not a low-reflection antenna.

This could jeopardize the operating safety of the vehicle.

▶ Have the low-reflection exterior antenna installed at a qualified specialist workshop.

▶ When operating two-way radios in the vehicle, always connect them to the low-reflection exterior antenna.

NOTE Invalidation of the operating permit due to failure to comply with the instructions for installation and use

The operating permit may be invalidated if the instructions for installation and use of two-way radios are not observed.

▶ Only use approved frequency bands.

▶ Observe the maximum permissible output power in these frequency bands.

▶ Only use approved antenna positions.

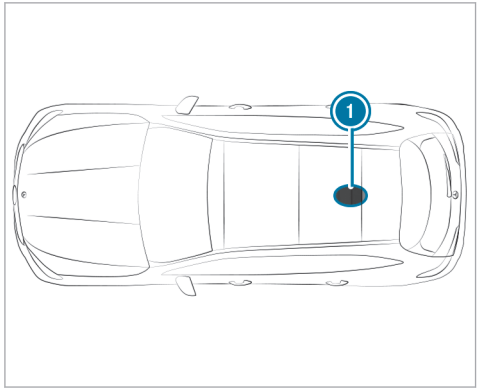

Vehicles without panoramic sliding sunroof

1 Rear roof area

On vehicles with a panoramic sliding sunroof, installing an antenna is not permitted.

Use Technical Specification ISO/TS 21609 (Road Vehicles – "EMC guidelines for installation of aftermarket radio frequency transmitting equipment") when retrofitting two-way radios. Comply with the legal requirements for detachable parts.

If your vehicle has fittings for two-way radio equipment, use the power supply and antenna connectors provided in the pre-installation. Observe the manufacturer's supplements when installing.

Two-way radio transmission output

The maximum transmission output (PEAK) at the base of the antenna must not exceed the values in the following table.

Frequency band and maximum transmission output

Frequency band	Maximum transmission output
2 m frequency band 144–174 MHz	50 W
Terrestrial Trunked Radio (TETRA) 380–460 MHz	10 W
Two-way radio 2G	2 W
Two-way radio 3G/4G/5G	0.5 W

The following can be used in the vehicle without restrictions:

- two-way radios with a maximum transmission output of 100 mW
- two-way radios with transmitter frequencies in the 380–410 MHz frequency band and a maximum transmission output of 2 W (TETRA)
- mobile phones (2G/3G/4G/5G)

There are no restrictions regarding the position of the antenna on the outside of the vehicle for the following frequency bands:

- Terrestrial Trunked Radio (TETRA)
- 2G/3G/4G/5G

Radio regulations

Regulatory radio identifiers and specific notes

The tables and sections contain the following regulatory radio information:

- Manufacturer information
- Required regulatory radio identifiers, listed by country/region:
  - Manufacturer's specifications
  - Model designations
  - Radio equipment approval numbers
- Specific information on wireless vehicle components

Further information and updates are available at the following web address:

https://regulatoryradioinformation.corpinter.net/us

Overview of manufacturers

Manufacturer	Manufacturer information
ADC	ADC Automotive Distance Control Systems GmbH, Peter-Dornier-Straße 10, 88131 Lindau, Germany
Bosch	Robert Bosch GmbH, Daimlerstraße 6, 71229 Leonberg, Germany
Continental Antenna	Continental Advanced Antenna GmbH, Römerring 1, 31137 Hildesheim, Germany
Continental Automotive	Continental Automotive GmbH, Siemensstraße 12, 93055 Regensburg, Germany
Continental Automotive Technologies	Continental Automotive Technologies GmbH, VDO-Straße 1, 64832 Babenhausen, Germany
Gentex	Gentex Corporation, 600 North Centennial Street, Zeeland MI 49464, USA
Harman Becker	Harman Becker Automotive Systems GmbH, Becker-Goehring-Straße 18, 76307 Karlsbad, Germany
HELLA	HELLA KGaA Hueck & Co., Rixbecker Straße 75, 59552 Lippstadt, Germany

Manufacturer	Manufacturer information
Hirschmann	Hirschmann Car Communication GmbH, Stuttgarter Straße 45-51, 72654 Neckartenzlingen, Germany
Huf Baolong	Huf Baolong Electronics Bretten GmbH, Gewerbestraße 40, 75015 Bretten, Germany
HUF	HUF Hülsbeck & Fürst GmbH & Co. KG, Steeger Straße 17, 42551 Velbert, Germany
KATHREIN Id	KATHREIN Automotive GmbH & Co. KG, Römerring 1, 31137 Hildesheim, Germany

Manufacturer	Manufacturer information
LEOPOLD KOSTAL	LEOPOLD KOSTAL GmbH & Co. KG, Hauert 11, 44227 Dortmund, Germany
MARQUARDT	MARQUARDT GmbH, Schloßstraße 16, 78604 Rietheim-Weilheim, Germany
Meta System	Meta System S.P.A., Via T. Galimberti 5, 42124 Reggio Emilia, Italy
Molex	Molex CVS Dabendorf GmbH, Märkische Straße 72, 15806 Zossen, Germany

Manufacturer	Manufacturer information
Panasonic	Panasonic Automotive Systems Europe GmbH, Robert-Bosch-Straße 27, 63225 Langen, Germany
Schrader	Schrader Electronics Ltd., 11 Technology Park, Belfast Road, Antrim BT41 1QS, Northern Ireland, United Kingdom
Sennheiser	Sennheiser electronic GmbH & Co. KG, Am Labor 1, 30900 Wedemark, Germany

Manufacturer	Manufacturer information
Veoneer	Veoneer Sweden AB, Wallentinsvägen 22, 44737 Vårgårda, Sweden
WITTE-Velbert	WITTE-Velbert GmbH & Co. KG, Hoeferstr. 3-15, 42551 Velbert, Germany

Algeria

Agréé par l'ANF
Référence du Certificat de conformité

Homologué par l'ARPCE
Référence du Certificat de conformité

Regulatory radio identification

Manufacturer	Model designation	Radio equipment approval number
Continental Antenna	RKE223GNS (locking system)	71/H/ANF/2021
Continental Automotive	CMKG1 (locking system)	122/H/ANF/2021
Continental Automotive	CMKG2 (locking system)	123/H/ANF/2023
Continental Automotive	MARS Keyless (locking system)	122/H/ANF/2021
HELLA	DM4 (locking system)	123/H/ANF/2021
Hirschmann	920287A (locking system)	106/H/ANF/2020
Hirschmann	920287B (locking system)	107/H/ANF/2020
Hirschmann	920702A (locking system)	133/H/ANF/2022
HUF	HUF13145 (locking system)	105/H/ANF/2022

Manufacturer	Model designation	Radio equipment approval number
LEOPOLD KOSTAL	KK1 (locking system)	172/H/ANF/2021
MARQUARDT	DC12A (locking system)	188/H/ANF/2021
MARQUARDT	DC12B (locking system)	189/H/ANF/2021
MARQUARDT	DC12K (locking system)	190/H/ANF/2021
MARQUARDT	MS5 (locking system)	195/H/ANF/2021
MARQUARDT	MK1 (locking system)	193/H/ANF/2021
MARQUARDT	MK2 (locking system)	194/H/ANF/2021

Manufacturer	Model designation	Radio equipment approval number
MARQUARDT	3350.38 (locking system)	186/H/ANF/2021
Schrader	AG5SP4 (tire pressure sensor)	3681/1-73.OA 1639/DT/DG/ARPT/15
Schrader	AG3PF4 (tire pressure sensor)	652/1/DT/DG/ARPCE/2020
Schrader	BG3FP4 (tire pressure sensor)	56/H/ANF/2021
Schrader	GG4T (tire pressure sensor)	3994/1.69-DA/2098/DT/DG/ARPT/17

Manufacturer	Model designation	Radio equipment approval number
Schrader	DG6W2D4 (tire pressure sensor)	2695/1-NO.431396/DT/DG/ARPT/17
Huf Baolong	TSSRE4A (tire pressure sensor)	2695/1-NO.431396/DT/DG/ARPT/17
WITTE-Velbert	SDHTAG3NFC (locking system)	32/H/ANF/2021

Argentina

Regulatory radio identification

Manufacturer	Model designation	Radio equipment approval number
ADC	ARS4-A (radar sensor)	C-18005
ADC	ARS441DP10 (radar sensor)	C-2377
Continental Antenna	RKE213E1 (antenna amplifier)	H-26206
Continental Antenna	RKE223E1 (antenna amplifier)	H-24637
Continental Automotive	CMKG1 (locking system)	H-24376

Manufacturer	Model designation	Radio equipment approval number
Continental Automotive	CMKG2 (locking system)	H-28998
Continental Automotive	MARS Keyless (locking system)	H-17929
Continental Automotive	D-WMI2020A (control unit)	H-23974
HELLA	DM4 (locking system)	H-17845
Hirschmann	920287A (locking system)	H-15694
Hirschmann	920287B (locking system)	H-15695

Manufacturer	Model designation	Radio equipment approval number
Hirschmann	920702A (locking system)	H-28310
Huf Baolong	TSSRE4A (tire pressure sensor)	H-20027
HUF	HUF13145 (locking system)	H-28067
HUF	HUF14632 (locking system)	H-15541
HUF	HUF4761 (locking system)	H-11545

Manufacturer	Model designation	Radio equipment approval number
LEOPOLD KOSTAL	KK1 (locking system)	H-16874
MARQUARDT	DC12A (locking system)	H-17689
MARQUARDT	DC12B (locking system)	H-21034
MARQUARDT	DC12K (locking system)	H-21035
MARQUARDT	MS2 (locking system)	H-17598
MARQUARDT	MS4 (locking system)	H-23101
MARQUARDT	MS5 (locking system)	H-24933

Manufacturer	Model designation	Radio equipment approval number
MARQUARDT	MK1 (locking system)	H-17213
MARQUARDT	MK2 (locking system)	H-17212
MARQUARDT	3350.38 (locking system)	H-23166
Schrader	AG5SP4 (tire pressure sensor)	H-4788
Schrader	AG3PF4 (tire pressure sensor)	H-23292

Manufacturer	Model designation	Radio equipment approval number
Schrader	BG3FP4 (tire pressure sensor)	H-25586
Schrader	GG4T (tire pressure sensor)	H-20495
Schrader	DG6W2D4 (tire pressure sensor)	H-20959
WITTE-Velbert	SDHTAG3NFC (locking system)	H-24664

Australia

Regulatory radio identification

Manufacturer	Model designation
ADC	ARS4-A (radar sensor)
ADC	ARS4-C (radar sensor)
ADC	ARS441DP10 (radar sensor)
Bosch	MRR1Rear (radar sensor)
Bosch	MRRe14FCR (radar sensor)
Bosch	FR5CPCCF (radar sensor)
Continental Antenna	RKE213E1 (antenna amplifier)

Manufacturer	Model designation
Continental Antenna	RKE223E1 (antenna amplifier)
Continental Automotive	CMKG1 (locking system)
Continental Automotive	CMKG2 (locking system)
Continental Automotive	MARS Keyless (locking system)
Continental Automotive Technologies	NTG7Q MID LF2 (head unit)
Continental Automotive Technologies	NTG7Q HIGH LF2 (head unit)
Continental Automotive Technologies	NTG7Q PREMIUM LF2 (head unit)

Manufacturer	Model designation
Hirschmann	920287A (locking system)
Hirschmann	920287B (locking system)
Hirschmann	920702A (locking system)
Huf Baolong	TSSRE4A (tire pressure sensor)
LEOPOLD KOSTAL	KK1 (locking system)
MARQUARDT	MK1 (locking system)
MARQUARDT	MK2 (locking system)
MARQUARDT	3350.38 (locking system)

Manufacturer	Model designation
Schrader	AG5SP4 (tire pressure sensor)
Schrader	AG3PF4 (tire pressure sensor)
Schrader	BG3FP4 (tire pressure sensor)
Schrader	GG4T (tire pressure sensor)
Schrader	DG6W2D4 (tire pressure sensor)
Veoneer	77V12BSM (radar sensor)
Veoneer	77V12CRN (radar sensor)

Manufacturer	Model designation
Veoneer	77V125CRN (radar sensor)
Veoneer	MMRV1 (radar sensor)

Bahamas

Regulatory radio identification

Manufacturer	Model designation	Radio equipment approval number
ADC	ARS4-A (radar sensor)	URCA_TA_2014_082
ADC	ARS4-C (radar sensor)	URCA_TA_2019_167
Bosch	MRR1Rear (radar sensor)	URCA_TA/2017_184
Bosch	MRRe14FCR (radar sensor)	URCA_TA/2017_157
Bosch	FR5CPCCF (radar sensor)	URCA_TA_2019_195
Continental Automotive	CMKG1 (locking system)	URCA_TA/2020_068
Continental Automotive	CMKG2 (locking system)	URCA_TA/2023_028
Continental Automotive	MARS Keyless (locking system)	URCA_TA/2017_119
Continental Antenna	RKE213E1 (antenna amplifier)	UCRA_TA/2016_009
Continental Antenna	RKE223E1GNS (antenna amplifier)	UCRA_TA/2020_032

Manufacturer	Model designation	Radio equipment approval number
HELLA	DM4 (locking system)	URCA_TA/2017_078
Hirschmann	920287A (locking system)	URCA_TA/2019_053
Hirschmann	920287B (locking system)	URCA_TA/2019_052
Hirschmann	920702A (locking system)	URCA_TA/2022_043
HUF	HUF13145 (locking system)	URCA_TA_2022_057
HUF	HUF4761 (locking system)	URCA_TA/2015_087

Manufacturer	Model designation	Radio equipment approval number
HUF	HUF4761 (locking system)	URCA_TA/2015_087
Huf Baolong	TSSRE4A (tire pressure sensor)	URCA_TA/2017_094
LEOPOLD KOSTAL	KK1 (locking system)	URCA_TA/2015_081
MARQUARDT	DC12A (locking system)	URCA_TA_2017_042
MARQUARDT	DC12B (locking system)	URCA_TA_2019_128
MARQUARDT	DC12K (locking system)	URCA_TA_2019_129
MARQUARDT	MS2 (locking system)	URCA_TA/2017_021

Manufacturer	Model designation	Radio equipment approval number
MARQUARDT	MS4 (locking system)	URCA_TA_2019_141
MARQUARDT	MS5 (locking system)	URCA_TA_2020_141, URCA_TA_2022_228
MARQUARDT	MK1 (locking system)	URCA_TA/2015_031
MARQUARDT	MK2 (locking system)	URCA_TA/2015_033
MARQUARDT	3350.38 (locking system)	URCA_TA/2019_250
Schrader	AG5SP4 (tire pressure sensor)	URCA_TA_TA/2015_009

Manufacturer	Model designation	Radio equipment approval number
Schrader	AG3PF4 (tire pressure sensor)	URCA_TA_2019_101
Schrader	BG3FP4 (tire pressure sensor)	URCA_TA_2021_001
Schrader	GG4T (tire pressure sensor)	URCA_TA_2020_046
Schrader	DG6W2D4 (tire pressure sensor)	URCA_TA_2019_247
Veoneer	77V12BSM (radar sensor)	URCA_TA_2019_169
Veoneer	77V12CRN (radar sensor)	URCA_TA_2019_168
Veoneer	77V125CRN (radar sensor)	URCA_TA_2021_027
Veoneer	MMRV1 (radar sensor)	URCA_TA/2015_063
WITTE-Velbert	SDHTAG3NFC (locking system)	URCA_TA_2020_056

Belarus

Regulatory radio identification

Manufacturer	Model designation
ADC	ARS4-A (radar sensor)
ADC	ARS4-C (radar sensor)
Bosch	MRR1Rear (radar sensor)
Bosch	MRRe14FCR (radar sensor)
Bosch	FR5CPCCF (radar sensor)
Continental Antenna	RKE213E1 (antenna amplifier)
Continental Antenna	RKE223E1GNS (antenna amplifier)
Continental Automotive	CMKG1 (locking system)
Continental Automotive	CMKG2 (locking system)

Manufacturer	Model designation
Continental Automotive	MARS Keyless (locking system)
Harman Becker	HERMES 3.0 (communication module)
HELLA	DM4 (locking system)
LEOPOLD KOSTAL	KK1 (locking system)
MARQUARDT	DC12A (locking system)
MARQUARDT	DC12B (locking system)
MARQUARDT	DC12K (locking system)
MARQUARDT	MS2 (locking system)

Manufacturer	Model designation
MARQUARDT	MS4 (locking system)
MARQUARDT	MS5 (locking system)
MARQUARDT	MK1 (locking system)
MARQUARDT	MK2 (locking system)
MARQUARDT	3350.38 (locking system)
Veoneer	77V12BSM (radar sensor)
Veoneer	77V12CRN (radar sensor)
Veoneer	77V125CRN (radar sensor)

Manufacturer	Model designation
Veoneer	MMRV1 (radar sensor)
WITTE-Velbert	SDHTAG3NFC (locking system)

Botswana

Regulatory radio identification

Manufacturer	Model designation	Radio equipment approval number
ADC	ARS4-A (radar sensor)	BOCRA/TA/2018/2026
ADC	ARS4-C (radar sensor)	BOCRA/TA/2020/5186
Bosch	MRRe14FCR (radar sensor)	BOCRA/TA/2019/4674

Manufacturer	Model designation	Radio equipment approval number
Bosch	FR5CPCCF (radar sensor)	BOCRA/TA/2019/4975
Bosch	MRR1Rear (radar sensor)	BOCRA/TA/2017/3788
Continental Antenna	RKE213E1 (antenna amplifier)	BOCRA/TA/2019/4387
Continental Antenna	RKE223E1GNS (antenna amplifier)	BOCRA/TA/2019/5050
Continental Automotive	CMKG1 (locking system)	BOCRA/TA/2019/5075
Continental Automotive	CMKG2 (locking system)	BOCRA/TA/2023/8144
Continental Automotive	MARS Keyless (locking system)	BOCRA/TA/2019/4661

Manufacturer	Model designation	Radio equipment approval number
HELLA	DM4 (locking system)	BOCRA/TA/2019/4662
Hirschmann	920287A (locking system)	BOCRA/TA/2019/4724
Hirschmann	920287B (locking system)	BOCRA/TA/2019/4723
Hirschmann	920702A (locking system)	BOCRA/TA/2022/7099
HUF	HUF13145 (locking system)	HUF13145
HUF	HUF4761 (locking system)	BOCRA/TA/2019/4664

Manufacturer	Model designation	Radio equipment approval number
LEOPOLD KOSTAL	KK1 (locking system)	BOCRA/TA/2019/4593
MARQUARDT	DC12A (locking system)	BOCRA/TA/2019/4389
MARQUARDT	DC12B (locking system)	BOCRA/TA/2019/4388
MARQUARDT	DC12K (locking system)	BOCRA/TA/2019/4390
MARQUARDT	MS2 (locking system)	BOCRA/TA/2019/5135
MARQUARDT	MS4 (locking system)	BOCRA/TA/2019/4758
MARQUARDT	MS5 (locking system)	BOCRA/TA/2020/5473
MARQUARDT	MK1 (locking system)	BOCRA/TA/2019/4359

Manufacturer	Model designation	Radio equipment approval number
MARQUARDT	MK2 (locking system)	BOCRA/TA/2019/4360
MARQUARDT	3350.38 (locking system)	BOCRA/TA/2019/4687
Veoneer	77V12BSM (radar sensor)	BOCRA/TA/2019/4975
Veoneer	77V12CRN (radar sensor)	BOCRA/TA/2019/4980
Veoneer	77V125CRN (radar sensor)	BOCRA/TA/2021/6191
WITTE-Velbert	SDHTAG3NFC (locking system)	BOCRA/TA/2020/5342

Brazil

Note on two-way radio systems in the vehicle:

These systems are not protected against harmful interference and must not cause interference in properly approved systems.

Regulatory radio identification

ANATEL

Manufacturer	Model designation	Radio equipment approval number
ADC	ARS4-A (radar sensor)	02217-14-06068
ADC	ARS441DP10 (radar sensor)	06783-19-02496
Continental Antenna	RKE223E1 (antenna amplifier)	03691-15-05298
Continental Antenna	RKE213E1 (antenna amplifier)	07359-21-12817

ANATEL

Manufacturer	Model designation	Radio equipment approval number
Continental Antenna	RKE213E1 (antenna amplifier)	3691-15-5298
Continental Automotive	CMKG1 (locking system)	00325-20-02149
Continental Automotive	CMKG2 (locking system)	01334-23-02149
Continental Automotive	MARS Keyless (locking system)	03189-17-02856
Continental Automotive Technologies	NTG7Q MID LF2 (head unit)	04336-23-02149

ANATEL

Manufacturer	Model designation	Radio equipment approval number
Continental Automotive Technologies	NTG7Q HIGH LF2 (head unit)	04338-23-02 149
Continental Automotive Technologies	NTG7Q PREMIUM LF2 (head unit)	04337-23-02 149
HELLA	DM4 (locking system)	04689-17-05 364
Hirschmann	920287A (locking system)	1855-12-576 2
Hirschmann	920287B (locking system)	1787-12-805 8

ANATEL

Manufacturer	Model designation	Radio equipment approval number
HUF	HUF13145 (locking system)	HUF13145
HUF	HUF14632 (locking system)	03627-15-06 643
HUF	HUF4761 (locking system)	00053-13-06 643
LEOPOLD KOSTAL	KK1 (locking system)	02712-15-03 366
MARQUARDT	DC12A (locking system)	01333-17-02 930

ANATEL

Manufacturer	Model designation	Radio equipment approval number
MARQUARDT	DC12B (locking system)	01395-11-02 930
MARQUARDT	DC12K (locking system)	01392-11-02 930
MARQUARDT	MS2 (locking system)	00616-17-02 930
MARQUARDT	MS4 (locking system)	06218-19-02 930
MARQUARDT	MS5 (locking system)	11149-20-02 930
MARQUARDT	3350.38 (locking system)	03149-19-02 930

Manufacturer	Model designation	Radio equipment approval number
MARQUARDT	MK1 (locking system)	03756-15-02 930
MARQUARDT	MK2 (locking system)	03757-15-02 930
WITTE-Velbert	SDHTAG3NFC (locking system)	03034-20-07 018

Further specific information

Rear Seat Entertainment System:

This system is not protected against harmful interference and must not cause interference in properly approved systems.

This product is approved by ANATEL in accordance with the procedures set out in Resolution 242/2000 and complies with the relevant technical requirements. Further information can be found on the https://www.anatel.gov.br

Brunei Darussalam

Regulatory radio identification

Manufacturer	Model designation	Radio equipment approval number
ADC	ARS4-C (radar sensor)	DTA-004005
Bosch	FR5CPCCF (radar sensor)	DTA-004222
Bosch	LRR3 (radar sensor)	DTA-011039
Bosch	MRR1Rear (radar sensor)	DTA-006601
Bosch	MRRe14FCR (radar sensor)	DTA-006678
Continental Antenna	RKE213E1 (antenna amplifier)	DTA-006665
Continental Antenna	RKE223E1GNS (antenna amplifier)	DTA-004998
Continental Automotive	CMKG1 (locking system)	DTA-005043
Continental Automotive	CMKG2 (locking system)	DTA-023993

Manufacturer	Model designation	Radio equipment approval number
Continental Automotive	MARS Keyless (locking system)	DTA-017264
HELLA	DM4 (locking system)	DTA-020187
Hirschmann	920287A (locking system)	DTA-001661
Hirschmann	920287B (locking system)	DTA-000794
Hirschmann	920702A (locking system)	DTA-018051

Manufacturer	Model designation	Radio equipment approval number
Huf Baolong	TSSRE4A (tire pressure sensor)	DTA-000310
Huf Baolong	TSSSG4G6b (tire pressure monitoring system control unit)	DTA-003757
HUF	HUF13145 (locking system)	DTA-017926
HUF	HUF14632 (locking system)	DTA-006138

Manufacturer	Model designation	Radio equipment approval number
HUF	HUF4761 (locking system)	DTA-000615
LEOPOLD KOSTAL	KK1 (locking system)	DTA-007245
MARQUARDT	DC12A (locking system)	DTA-019403
MARQUARDT	DC12B (locking system)	DTA-000068
MARQUARDT	DC12K (locking system)	DTA-000066
MARQUARDT	MS2 (locking system)	LPD-38890

Manufacturer	Model designation	Radio equipment approval number
MARQUARDT	MS4 (locking system)	DTA-003525
MARQUARDT	MS5 (locking system)	DTA-005850
MARQUARDT	MK1 (locking system)	DTA-011312
MARQUARDT	MK2 (locking system)	DTA-011313
MARQUARDT	3350.38 (locking system)	DTA-003662

Manufacturer	Model designation	Radio equipment approval number
Schrader	AG5SP4 (tire pressure sensor)	LPD-29665
Schrader	AG3PF4 (tire pressure sensor)	LPD-29665
Schrader	BG3FP4 (tire pressure sensor)	DRQ-D-JATI-07-2000-109000
Schrader	DG6W2D4 (tire pressure sensor)	DTA-001514

Manufacturer	Model designation	Radio equipment approval number
Schrader	MFR (tire pressure monitoring system control unit)	DTA No. 003893
Schrader	MFR3 (tire pressure monitoring system control unit)	DRQ-D-MAJU-02-2011-111083
Veoneer	77V12BSM (radar sensor)	DTA-004000
Veoneer	77V12CRN (radar sensor)	DTA-003999

Manufacturer	Model designation	Radio equipment approval number
Veoneer	77V125CRN (radar sensor)	DTA-010423
Veoneer	77GHz MMRV1 (radar sensor)	DTA-006216
WITTE-Velbert	SDHTAG3NFC (locking system)	DTA-005628

Eurasian Economic Union

Regulatory radio identification

Manufacturer	Model designation
ADC	ARS4-A (radar sensor)
ADC	ARS4-C (radar sensor)
ADC	ARS441DP10 (radar sensor)
Bosch	FR5CPCCF (radar sensor)
Bosch	LRR3 (radar sensor)
Bosch	MRR1Rear (radar sensor)
Bosch	MRRe14FCR (radar sensor)

Manufacturer	Model designation
Continental Antenna	RKE213E1 (antenna amplifier)
Continental Antenna	RKE223E1GNS (antenna amplifier)
Continental Automotive	MARS Keyless (locking system)
Continental Automotive	CMKG1 (locking system)
Continental Automotive	CMKG2 (locking system)
HELLA	DM4 (locking system)
Hirschmann	920287A (locking system)

Manufacturer	Model designation
Hirschmann	920287B (locking system)
Hirschmann	920702A (locking system)
Huf Baolong	TSSRE4A (tire pressure sensor)
HUF	HUF13145 (locking system)
HUF	HUF4761 (locking system)
HUF	HUF14632 (locking system)
LEOPOLD KOSTAL	KK1 (locking system)

Manufacturer	Model designation
MARQUARDT	DC12A (locking system)
MARQUARDT	DC12B (locking system)
MARQUARDT	DC12K (locking system)
MARQUARDT	MS2 (locking system)
MARQUARDT	MS4 (locking system)
MARQUARDT	MS5 (locking system)
MARQUARDT	MK1 (locking system)
MARQUARDT	MK2 (locking system)
MARQUARDT	3350.38 (locking system)

Manufacturer	Model designation
Schrader	AG5SP4 (tire pressure sensor)
Schrader	AG3PF4 (tire pressure sensor)
Schrader	BG3FP4 (tire pressure sensor)
Schrader	GG4T (tire pressure sensor)
Schrader	DG6W2D4 (tire pressure sensor)
Veoneer	77GHz MMRV1 (radar sensor)
Veoneer	77V12BSM (radar sensor)

Manufacturer	Model designation
Veoneer	77V12CRN (radar sensor)
Veoneer	77V125CRN (radar sensor)
WITTE-Velbert	SDHTAG3NFC (locking system)

Ghana

Regulatory radio identification

Manufacturer	Model designation	Radio equipment approval number
		NCA APPROVED
ADC	ARS4-C (radar sensor)	ZRO-1H-7E3-152
ADC	ARS441DP10 (radar sensor)	ZRO-1H-7E3-152
Bosch	FR5CPCCF (radar sensor)	ZRO-M8-7E3-230
Continental Antenna	RKE213E1 (antenna amplifier)	ZRO-M8-7E3-X53
Continental Antenna	RKE223E1GNS (antenna amplifier)	ZRO-M8-7E3-225
Continental Automotive	CMKG1 (locking system)	ZRO-M8-7E3-277
Continental Automotive	CMKG2 (locking system)	7M-7E7-X25-DSR
Continental Automotive	MARS Keyless (locking system)	BR3-1M-GE2-16A
Continental Automotive Technologies	NTG7Q MID LF2 (head unit)	7M-7E7-X09-DSR
Continental Automotive Technologies	NTG7Q HIGH LF2 (head unit)	7M-7E7-X05-DSR
Continental Automotive Technologies	NTG7Q PREMIUM LF2 (head unit)	7M-7E7-X03-DSR

Manufacturer	Model designation	Radio equipment approval number
HELLA	DM4 (locking system)	BR3-1M-GE2-157
Hirschmann	920287A (locking system)	ZRO-M8-7E3-X45
Hirschmann	920287B (locking system)	ZRO-M8-7E3-X47
HUF	HUF13145 (locking system)	7E6-M1-X14-SRD
HUF	HUF4761 (locking system)	EX6-6M-GE2-16C
LEOPOLD KOSTAL	KK1 (locking system)	ZRO-M8-7E3-X49

Manufacturer	Model designation	Radio equipment approval number
MARQUARDT	DC12A (locking system)	ZRO-M8-7E3-X50
MARQUARDT	DC12B (locking system)	ZRO-M8-7E3-X51
MARQUARDT	DC12K (locking system)	ZRO-M8-7E3-X52
MARQUARDT	MS2 (locking system)	BR3-1M-GE-129
MARQUARDT	MS4 (locking system)	ZRO-1H-7E3-26E
MARQUARDT	MS5 (locking system)	SRO-1M-7E4-11B
MARQUARDT	MK1 (locking system)	ZRO-M8-7E3-X4A
MARQUARDT	MK2 (locking system)	ZRO-M8-7E3-X4C

Manufacturer	Model designation	Radio equipment approval number
MARQUARDT	3350.38 (locking system)	ZRO-M8-7E3-X3C
Veoneer	77V12BSM (radar sensor)	ZRO-1H-7E3-142
Veoneer	77V12CRN (radar sensor)	ZRO-M8-7E3-230
Veoneer	77V125CRN (radar sensor)	7E5-7M-X72-RDR
WITTE-Velbert	SDHTAG3NFC (locking system)	SRO-1M-7E4-X59

Indonesia

Regulatory radio identification

Manufacturer	Model designation	Radio equipment approval number
ADC	ARS4-C (radar sensor)	68676/SDPPI/2020 7163
ADC	ARS4-A (radar sensor)	90362/SDPPI/2023 7163
ADC	ARS441DP10 (radar sensor)	89748/SDPPI/2023 7163
Bosch	LRR3 (radar sensor)	74264/SDPPI/2021 7163
Bosch	MRR1Rear (radar sensor)	74267/SDPPI/2021 7163
Bosch	MRRevo14F (radar sensor)	74265/SDPPI/2021 7163

Manufacturer	Model designation	Radio equipment approval number
Bosch	MRRe14FCR (radar sensor)	74266/ SDPPI/2021 7163

Manufacturer	Model designation	Radio equipment approval number
Bosch	FR5CPCCF (radar sensor)	67882/ SDPPI/2020 7163 Dilarang melakukan perubahan spesifikasi yang dapat menimbulkan gangguan fisik dan/atau elektromagnetik terhadap lingkungan sekitarnya

Manufacturer	Model designation	Radio equipment approval number

Manufacturer	Model designation	Radio equipment approval number
Continental Antenna	RKE213E1 (antenna amplifier)	76621/ SDPPI/2021 7163 Dilarang melakukan perubahan spesifikasi yang dapat menimbulkan gangguan fisik dan/atau elektromagnetik terhadap lingkungan sekitarnya

Manufacturer	Model designation	Radio equipment approval number

Manufacturer	Model designation	Radio equipment approval number
Continental Antenna	RKE223E1GNS (antenna amplifier)	86957/ SDPPI/ 2022 10325 Dilarang melakukan perubahan spesifikasi yang dapat menimbulkan gangguan fisik dan/atau elektromagnetik terhadap lingkungan sekitarnya

Manufacturer	Model designation	Radio equipment approval number

Manufacturer	Model designation	Radio equipment approval number
Continental Automotive	CMKG1 (locking system)	87836/SDPPI/2023 7163 ⚠ Dilarang melakukan perubahan spesifikasi yang dapat menimbulkan gangguan fisik dan/atau elektromagnetik terhadap lingkungan sekitarnya

Manufacturer	Model designation	Radio equipment approval number

Manufacturer	Model designation	Radio equipment approval number
Continental Automotive	CMKG2 (locking system)	88721/SDPPI/2023 7163 ⚠ Dilarang melakukan perubahan spesifikasi yang dapat menimbulkan gangguan fisik dan/atau elektromagnetik terhadap lingkungan sekitarnya

Manufacturer	Model designation	Radio equipment approval number

Manufacturer	Model designation	Radio equipment approval number
Continental Automotive	MARS Keyless (locking system)	69379/SDPPI/2020 7163 ⚠ Dilarang melakukan perubahan spesifikasi yang dapat menimbulkan gangguan fisik dan/atau elektromagnetik terhadap lingkungan sekitarnya

Manufacturer	Model designation	Radio equipment approval number

Manufacturer	Model designation	Radio equipment approval number
Continental Automotive	D-WMI2020A (control unit)	66678/SDPPI/2020 7163 Dilarang melakukan perubahan spesifikasi yang dapat menimbulkan gangguan fisik dan/atau elektromagnetik terhadap lingkungan sekitarnya

Manufacturer	Model designation	Radio equipment approval number

Manufacturer	Model designation	Radio equipment approval number
Continental Automotive	NTG7 MID (Headunit)	70732/ SDPPI/2020 7163 ⚠ Dilarang melakukan perubahan spesifikasi yang dapat menimbulkan gangguan fisik dan/atau elektromagnetik terhadap lingkungan sekitarnya

Manufacturer	Model designation	Radio equipment approval number

Manufacturer	Model designation	Radio equipment approval number
Continental Automotive	NTG7 HIGH (Headunit)	70733/ SDPPI/2020 7163 ⚠ Dilarang melakukan perubahan spesifikasi yang dapat menimbulkan gangguan fisik dan/atau elektromagnetik terhadap lingkungan sekitarnya

Manufacturer	Model designation	Radio equipment approval number

Manufacturer	Model designation	Radio equipment approval number
Continental Automotive	NTG7 PREMIUM (Headunit)	70731/SDPPI/2020 7163 ⚠ Dilarang melakukan perubahan spesifikasi yang dapat menimbulkan gangguan fisik dan/atau elektromagnetik terhadap lingkungan sekitarnya

Manufacturer	Model designation	Radio equipment approval number

Manufacturer	Model designation	Radio equipment approval number
Continental Automotive	NTG7 PREMIUM PLUS (Headunit)	70734/SDPPI/2020 7163 ⚠ Dilarang melakukan perubahan spesifikasi yang dapat menimbulkan gangguan fisik dan/atau elektromagnetik terhadap lingkungan sekitarnya

Manufacturer	Model designation	Radio equipment approval number

Manufacturer	Model designation	Radio equipment approval number
Continental Automotive Technologies	NTG7Q MID LF2 (head unit)	88477/SDPPI/2023 7163 ⚠ Dilarang melakukan perubahan spesifikasi yang dapat menimbulkan gangguan fisik dan/atau elektromagnetik terhadap lingkungan sekitarnya

Manufacturer	Model designation	Radio equipment approval number

Manufacturer	Model designation	Radio equipment approval number
Continental Automotive Technologies	NTG7Q HIGH LF2 (head unit)	88579/SDPPI/2023 7163 Dilarang melakukan perubahan spesifikasi yang dapat menimbulkan gangguan fisik dan/atau elektromagnetik terhadap lingkungan sekitarnya

Manufacturer	Model designation	Radio equipment approval number

Manufacturer	Model designation	Radio equipment approval number
Continental Automotive Technologies	NTG7Q PREMIUM LF2 (head unit)	88478/SDPPI/2023 7163 Dilarang melakukan perubahan spesifikasi yang dapat menimbulkan gangguan fisik dan/atau elektromagnetik terhadap lingkungan sekitarnya

Manufacturer	Model designation	Radio equipment approval number

Manufacturer	Model designation	Radio equipment approval number
Harman Becker	NTG6N ENTRY/MID (Headunit) Production: Germany	64019/SDPPI/2019 7163 Dilarang melakukan perubahan spesifikasi yang dapat menimbulkan gangguan fisik dan/atau elektromagnetik terhadap lingkungan sekitarnya

Manufacturer	Model designation	Radio equipment approval number

Manufacturer	Model designation	Radio equipment approval number
Harman Becker	NTG6N HIGH (Headunit) Production: Germany	64018/SDPPI/2019 7163 ⚠ Dilarang melakukan perubahan spesifikasi yang dapat menimbulkan gangguan fisik dan/atau elektromagnetik terhadap lingkungan sekitarnya

Manufacturer	Model designation	Radio equipment approval number

Manufacturer	Model designation	Radio equipment approval number
Harman Becker	NTG6N ENTRY/MID (Headunit) Production: Hungary	63775/ SDPPI/2019 7163 Dilarang melakukan perubahan spesifikasi yang dapat menimbulkan gangguan fisik dan/atau elektromagnetik terhadap lingkungan sekitarnya

Manufacturer	Model designation	Radio equipment approval number

Manufacturer	Model designation	Radio equipment approval number
Harman Becker	NTG6N HIGH (Headunit) Production: Hungary	63774/ SDPPI/2019 7163 Dilarang melakukan perubahan spesifikasi yang dapat menimbulkan gangguan fisik dan/atau elektromagnetik terhadap lingkungan sekitarnya

Manufacturer	Model designation	Radio equipment approval number

Manufacturer	Model designation	Radio equipment approval number
Harman Becker	NTG7 MID (Headunit)	65544/SDPPI/20207163 Dilarang melakukan perubahan spesifikasi yang dapat menimbulkan gangguan fisik dan/atau elektromagnetik terhadap lingkungan sekitarnya

Manufacturer	Model designation	Radio equipment approval number

Manufacturer	Model designation	Radio equipment approval number
Harman Becker	NTG7 HIGH (Headunit)	70513/ SDPPI/2020 7163 ⚠ Dilarang melakukan perubahan spesifikasi yang dapat menimbulkan gangguan fisik dan/atau elektromagnetik terhadap lingkungan sekitarnya

Manufacturer	Model designation	Radio equipment approval number

Manufacturer	Model designation	Radio equipment approval number
Harman Becker	NTG7 PREMIUM (Headunit)	65543/ SDPPI/2020 7163 ⚠ Dilarang melakukan perubahan spesifikasi yang dapat menimbulkan gangguan fisik dan/atau elektromagnetik terhadap lingkungan sekitarnya

Manufacturer	Model designation	Radio equipment approval number

Manufacturer	Model designation	Radio equipment approval number
Harman Becker	NTG7 PREMIUM PLUS (Headunit)	70512/SDPPI/2020 7163 ⚠ Dilarang melakukan perubahan spesifikasi yang dapat menimbulkan gangguan fisik dan/atau elektromagnetik terhadap lingkungan sekitarnya

Manufacturer	Model designation	Radio equipment approval number

Manufacturer	Model designation	Radio equipment approval number
Harman Becker	NTG7 RSU (control unit)	66387/ SDPPI/2020 7163 Dilarang melakukan perubahan spesifikasi yang dapat menimbulkan gangguan fisik dan/atau elektromagnetik terhadap lingkungan sekitarnya

Manufacturer	Model designation	Radio equipment approval number

Manufacturer	Model designation	Radio equipment approval number
HELLA	DM4 (locking system)	69378/ SDPPI/2020 7163 Dilarang melakukan perubahan spesifikasi yang dapat menimbulkan gangguan fisik dan/atau elektromagnetik terhadap lingkungan sekitarnya

Manufacturer	Model designation	Radio equipment approval number
Huf Baolong	TSSRE4A (tire pressure sensor)	72438/ SDPPI/2021 7163

Manufacturer	Model designation	Radio equipment approval number
Hirschmann	920287A (locking system)	71369 / SDPPI/2020 7163 Dilarang melakukan perubahan spesifikasi yang dapat menimbulkan gangguan fisik dan/atau elektromagnetik terhadap lingkungan sekitarnya

Manufacturer	Model designation	Radio equipment approval number

Manufacturer	Model designation	Radio equipment approval number
Hirschmann	920287B (locking system)	72974 / SDPPI/2021 7163 ⚠ Dilarang melakukan perubahan spesifikasi yang dapat menimbulkan gangguan fisik dan/atau elektromagnetik terhadap lingkungan sekitarnya

Manufacturer	Model designation	Radio equipment approval number

Manufacturer	Model designation	Radio equipment approval number
Hirschmann	920702A (locking system)	82675/ SDPPI/2022 7163 ⚠ Dilarang melakukan perubahan spesifikasi yang dapat menimbulkan gangguan fisik dan/atau elektromagnetik terhadap lingkungan sekitarnya

Manufacturer	Model designation	Radio equipment approval number

Manufacturer	Model designation	Radio equipment approval number
HUF	HUF14632 (locking system)	78368/SDPPI/2021 7163 ⚠ Dilarang melakukan perubahan spesifikasi yang dapat menimbulkan gangguan fisik dan/atau elektromagnetik terhadap lingkungan sekitarnya

Manufacturer	Model designation	Radio equipment approval number

Manufacturer	Model designation	Radio equipment approval number
HUF	HUF4761 (locking system)	26742/SDPPI/2015 3533 Dilarang melakukan perubahan spesifikasi yang dapat menimbulkan gangguan fisik dan/atau elektromagnetik terhadap lingkungan sekitarnya

Manufacturer	Model designation	Radio equipment approval number

Manufacturer	Model designation	Radio equipment approval number
HUF	HUF13145 (NFC reader)	83988/SDPPI/2022 Dilarang melakukan perubahan spesifikasi yang dapat menimbulkan gangguan fisik dan/atau elektromagnetik terhadap lingkungan sekitarnya

Manufacturer	Model designation	Radio equipment approval number
LEOPOLD KOSTAL	KK1 (locking system)	41121/SDPPI/2018 5125

Manufacturer	Model designation	Radio equipment approval number
MARQUARDT	DC12A (locking system)	67373/SDPPI/2020 7163 ⚠ Dilarang melakukan perubahan spesifikasi yang dapat menimbulkan gangguan fisik dan/atau elektromagnetik terhadap lingkungan sekitarnya

Manufacturer	Model designation	Radio equipment approval number

Manufacturer	Model designation	Radio equipment approval number
MARQUARDT	DC12B (locking system)	80676/SDPPI/2022 7163 ⚠ Dilarang melakukan perubahan spesifikasi yang dapat menimbulkan gangguan fisik dan/atau elektromagnetik terhadap lingkungan sekitarnya

Manufacturer	Model designation	Radio equipment approval number

Manufacturer	Model designation	Radio equipment approval number
MARQUARDT	DC12K (locking system)	80621/SDPPI/2022 7163 ⚠ Dilarang melakukan perubahan spesifikasi yang dapat menimbulkan gangguan fisik dan/atau elektromagnetik terhadap lingkungan sekitarnya

Manufacturer	Model designation	Radio equipment approval number

Manufacturer	Model designation	Radio equipment approval number
MARQUARDT	MS2 (locking system)	67372/SDPPI/2020 7163 ⚠ Dilarang melakukan perubahan spesifikasi yang dapat menimbulkan gangguan fisik dan/atau elektromagnetik terhadap lingkungan sekitarnya

Manufacturer	Model designation	Radio equipment approval number

Manufacturer	Model designation	Radio equipment approval number
MARQUARDT	MS4 (locking system)	64126/SDPPI/2019 7163 Dilarang melakukan perubahan spesifikasi yang dapat menimbulkan gangguan fisik dan/atau elektromagnetik terhadap lingkungan sekitarnya

Manufacturer	Model designation	Radio equipment approval number

Manufacturer	Model designation	Radio equipment approval number
MARQUARDT	MS5 (locking system)	90695/SDPPI/2023 7163 Dilarang melakukan perubahan spesifikasi yang dapat menimbulkan gangguan fisik dan/atau elektromagnetik terhadap lingkungan sekitarnya

Manufacturer	Model designation	Radio equipment approval number

Manufacturer	Model designation	Radio equipment approval number
MARQUARDT	MK1 (locking system)	75282/ SDPPI/ 2021 7163 Dilarang melakukan perubahan spesifikasi yang dapat menimbulkan gangguan fisik dan/atau elektromagnetik terhadap lingkungan sekitarnya

Manufacturer	Model designation	Radio equipment approval number

Manufacturer	Model designation	Radio equipment approval number
MARQUARDT	MK2 (locking system)	75285/ SDPPI/ 2021 7163 Dilarang melakukan perubahan spesifikasi yang dapat menimbulkan gangguan fisik dan/atau elektromagnetik terhadap lingkungan sekitarnya

Manufacturer	Model designation	Radio equipment approval number

Manufacturer	Model designation	Radio equipment approval number
MARQUARDT	3350.38 (locking system)	82980/ SDPPI/2022 7163 Dilarang melakukan perubahan spesifikasi yang dapat menimbulkan gangguan fisik dan/atau elektromagnetik terhadap lingkungan sekitarnya

Manufacturer	Model designation	Radio equipment approval number

Manufacturer	Model designation	Radio equipment approval number
Molex	WCH-302b (control unit)	71668/SDPPI/2020 7163 Dilarang melakukan perubahan spesifikasi yang dapat menimbulkan gangguan fisik dan/atau elektromagnetik terhadap lingkungan sekitarnya

Manufacturer	Model designation	Radio equipment approval number

Manufacturer	Model designation	Radio equipment approval number
Molex	WCH-302d (control unit)	71220/ SDPPI/2020 7163 Dilarang melakukan perubahan spesifikasi yang dapat menimbulkan gangguan fisik dan/atau elektromagnetik terhadap lingkungan sekitarnya

Manufacturer	Model designation	Radio equipment approval number

Manufacturer	Model designation	Radio equipment approval number
Molex	WCH-302e (control unit)	71669/ SDPPI/2020 7163 Dilarang melakukan perubahan spesifikasi yang dapat menimbulkan gangguan fisik dan/atau elektromagnetik terhadap lingkungan sekitarnya

Manufacturer	Model designation	Radio equipment approval number

Manufacturer	Model designation	Radio equipment approval number
Panasonic	DAIRSE (control unit)	63550/SDPPI/2019 Dilarang melakukan perubahan spesifikasi yang dapat menimbulkan gangguan fisik dan/atau elektromagnetik terhadap lingkungan sekitarnya

Manufacturer	Model designation	Radio equipment approval number
Schrader	GG4T (tire pressure sensor)	72023/SDPPI/2020 9338
Schrader	AG5SP4 (tire pressure sensor)	75465/SDPPI/2021 7163

Manufacturer	Model designation	Radio equipment approval number
Schrader	BG3FP4 (tire pressure sensor)	72765/SDPP/2021 7163
Schrader	DG6W2D4 (tire pressure sensor)	57058/SDPPI/2018 3612
Schrader	MC34MA4 (tire pressure monitoring system control unit)	25626/SDPPI/2015 3612

Manufacturer	Model designation	Radio equipment approval number
Schrader	AG3PF4 (tire pressure sensor)	62396/SDPPI/2020 7163
Schrader	GG4T (tire pressure sensor)	72023/SDPPI/2020 7163

Manufacturer	Model designation	Radio equipment approval number
Veoneer	77GHz MMRV1 (radar sensor)	74749/SDPPI/2021 7163
Veoneer	77V12CRN (radar sensor)	66830/SDPPI/2020 7163

Manufacturer	Model designation	Radio equipment approval number
Veoneer	77V125CRN (radar sensor)	78366/SDPPI/2021 7163

Manufacturer	Model designation	Radio equipment approval number
Veoneer	77V12BSM (radar sensor)	66792/SDPPI/2020 7163

Manufacturer	Model designation	Radio equipment approval number
WITTE-Velbert	SDHTAG3NFC (locking system)	67233/SDPPI/2020 10325 Dilarang melakukan perubahan spesifikasi yang dapat menimbulkan gangguan fisik dan/atau elektromagnetik terhadap lingkungan sekitarnya

Manufacturer	Model designation	Radio equipment approval number

Israel

Regulatory radio identification

Manufacturer	Model designation	Radio equipment approval number
		Approval number of the Ministry of Communications:
ADC	ARS4-A (radar sensor)	55-09697
ADC	ARS4-C (radar sensor)	55-07525
Bosch	FR5CPCCF (radar sensor)	55-08783
Bosch	LRR3 (radar sensor)	55-08334
Bosch	MRR1Rear (radar sensor)	55-08333
Bosch	MRRe14FCR (radar sensor)	55-08395
Bosch	MBCI2LS3PR 1 (head unit)	51-91228
Bosch	MBCI2LS4PR 1 (head unit)	51-91226
Continental Antenna	RKE213E1 (antenna amplifier)	55-13929
Continental Automotive	D-WMI2017B (control unit)	51-75654
Continental Automotive	D-WMI2017A (control unit)	51-75367
Continental Automotive	D-WMI2016A (control unit)	55-08177
Continental Automotive	D-WMI2020A (control unit)	55-08179
Continental Automotive	RKE213E1 (Antennenverstärker)	55-13929
Continental Automotive	RKE223E1GNS (Antennenverstärker)	51-70799

Manufacturer	Model designation	Radio equipment approval number
Continental Automotive	CMKG1 (Schließsystem)	51-87871
Continental Automotive	CMKG2 (Schließsystem)	51-92059
Continental Automotive	MARS Keyless (Schließsystem)	55-13749
Continental Automotive Technologies	NTG7Q MID LF2 (head unit)	51-90718
Continental Automotive Technologies	NTG7Q HIGH LF2 (head unit)	51-90717

Manufacturer	Model designation	Radio equipment approval number
Continental Automotive Technologies	NTG7Q PREMIUM LF2 (head unit)	51-90719
Harman Becker	NTG7 HIGH-IL (Headunit)	51-89476
Harman Becker	NTG7 PREMIUMPLUS-IL (Headunit)	51-89475
HELLA	DM4 (Schließsystem)	55-14271
Hirschmann	920287A (Schließsystem)	51-62759

Manufacturer	Model designation	Radio equipment approval number
Hirschmann	920287B (Schließsystem)	51-49357
Hirschmann	920702A (Schließsystem)	55-12320
Huf Baolong	TSSRE4A (tire pressure sensor)	63-63571
Huf Baolong	TSSSG4G6b (tire pressure monitoring system control unit)	63-66757
HUF	HUF13145 (locking system)	55-14153

Manufacturer	Model designation	Radio equipment approval number
LEOPOLD KOSTAL	KK1 (locking system)	51-87872
MARQUARDT	DC12A (locking system)	55-13847
MARQUARDT	DC12B (locking system)	55-12215
MARQUARDT	DC12K (locking system)	55-12214
MARQUARDT	MS2 (locking system)	51-85192
MARQUARDT	MS5 (locking system)	51-86840
MARQUARDT	3350.38 (locking system)	55-14331

Manufacturer	Model designation	Radio equipment approval number
Schrader	AG3PF4 (tire pressure sensor)	51-78338
Schrader	AG5SP4 (tire pressure sensor)	51-73152
Schrader	BG3FP4 (tire pressure sensor)	51-77898
Schrader	DG6W2D4 (tire pressure sensor)	51-64111
Schrader	GG4T (tire pressure sensor)	55-09441

Manufacturer	Model designation	Radio equipment approval number
Schrader	MC34MA4 (tire pressure monitoring system control unit)	51-29611
Schrader	MFR (tire pressure monitoring system control unit)	55-06040
Schrader	MFR3 (tire pressure monitoring system control unit)	51-79817
Veoneer	77V12BSM (radar sensor)	55-08176

Manufacturer	Model designation	Radio equipment approval number
Veoneer	77V12CRN (radar sensor)	55-08301
WITTE-Velbert	SDHTAG3NFC (locking system)	55-12216

Jamaica

Regulatory radio identification

Manufacturer	Model designation
Continental Automotive	CMKG1 (locking system)
Continental Automotive	CMKG2 (locking system)
Continental Automotive	RKE213E1 (antenna amplifier)
Continental Automotive	RKE223E1GNS (antenna amplifier)
Continental Automotive	MARS Keyless (locking system)
Hirschmann	920287A (locking system)
Hirschmann	920287B (locking system)
Hirschmann	920702A (locking system)
HELLA	DM4 (locking system)
HUF	HUF13145 (locking system)
LEOPOLD KOSTAL	KK1 (locking system)
MARQUARDT	DC12A (locking system)
MARQUARDT	DC12B (locking system)
MARQUARDT	DC12K (locking system)
MARQUARDT	MS2 (locking system)
MARQUARDT	MS4 (locking system)
MARQUARDT	MS5 (locking system)
MARQUARDT	MK1 (locking system)
MARQUARDT	MK2 (locking system)
MARQUARDT	3350.38 (locking system)
WITTE-Velbert	SDHTAG3NFC (locking system)

Japan

Regulatory radio identification

Manufacturer	Model designation	Radio equipment approval number
Continental Automotive	CMKG2 (locking system)	TMWK221100 4648KR
Continental Automotive Technologies	NTG7Q HIGH LF2 (head unit)	003-230113
Continental Automotive Technologies	NTG7Q PREMIUM LF2 (head unit)	003-230112
Sennheiser	M3IETW2R (Earbud)	201-190814 (R)
Sennheiser	M3IETW2L (Earbud)	201-190815 (L)
Sennheiser	BTT100 (Bluetooth Audio Transmitter)	020-180077

Canada

Regulatory radio identification

Manufacturer	Model designation	Radio equipment approval number
Continental Automotive	CMKG2 (locking system)	IC: 7812D-CMKG2
Continental Automotive Technologies	NTG7Q MID LF2 (head unit)	IC: NTG7QMIDLF2
Continental Automotive Technologies	NTG7Q HIGH LF2 (head unit)	IC: NTG7QHIGLF2
Continental Automotive Technologies	NTG7Q PREMIUM LF2 (head unit)	IC: NTG7QPREF2
Sennheiser	M3IETW2R (Earbud)	IC:2099A-M3IETW2R
Sennheiser	M3IETW2L (Earbud)	IC:2099A-M3IETW2L

Manufacturer	Model designation	Radio equipment approval number
Sennheiser	BTT100 (Bluetooth Audio Transmitter)	IC:2099A-BTT100
Sennheiser	M3IETW2 C (Charging Case)	CAN ICS-3(B)/ NMB-3(B)

Kuwait

Regulatory radio identification

Manufacturer	Model designation	Radio equipment approval number
Continental Automotive	CMKG2 (locking system)	Ref. 6716
Sennheiser	M3IETW2 (Momentum True Wireless 2)	Ref. 4870
Sennheiser	BTT100 (Bluetooth Audio Transmitter)	Ref. 4871

Malaysia

Regulatory radio identification

Manufacturer	Model designation	Radio equipment approval number
ADC	ARS4-C (radar sensor)	HIDF15000153
Bosch	FR5CPCCF (radar sensor)	CIDF15000490
Bosch	LRR3 (radar sensor)	CIDF15000490
Bosch	MRR1Rear (radar sensor)	CIDF15000490
Bosch	MRRe14FCR (radar sensor)	CIDF15000490

Manufacturer	Model designation	Radio equipment approval number
Bosch	MRRevo14F (radar sensor)	CIDF15000490
Continental Antenna	RKE213E1 (antenna amplifier)	HIDF15000153
Continental Antenna	RKE223E1GNS (antenna amplifier)	HIDF16000136
Continental Automotive	CMKG1 (locking system)	HIDF15000153
Continental Automotive	CMKG2 (locking system)	HIDF15000153

Manufacturer	Model designation	Radio equipment approval number
Continental Automotive	MARS Keyless (locking system)	CIDF15000578
Continental Automotive	UWBTRX1 (locking system)	HIDF15000153
Continental Automotive	D-WMI2020A (control unit)	RGEZ/12A/1019/S(19-4128)
Continental Automotive Technologies	NTG7Q MID LF2 (head unit)	RCCT/92G/0423/S(23-0350)

Manufacturer	Model designation	Radio equipment approval number
Continental Automotive Technologies	NTG7Q HIGH LF2 (head unit)	CCT/91G/0323/S(23-1291)
Continental Automotive Technologies	NTG7Q PREMIUM LF2 (head unit)	RGQB/05A/0323/S(23-1293)
HELLA	DM4 (locking system)	CIDF15000578
Hirschmann	920287A (locking system)	RAUU/63A/0311/S(11-0432)
Hirschmann	920287B (locking system)	RAUU/22C/0615/S(15-1864)

Manufacturer	Model designation	Radio equipment approval number
Hirschmann	920702A (locking system)	HIDF15000153
Huf Baolong	TSSRE4A (tire pressure sensor)	CIDF17000184
HUF	HUF13145 (locking system)	RFBY/09A/0422/S(22-1843)
HUF	HUF14632 (locking system)	RAYN/25A/0715/S(15-2385)

Manufacturer	Model designation	Radio equipment approval number
HUF	HUF4761 (locking system)	RAAU/16B/1112/S(12-2053)
LEOPOLD KOSTAL	KK1 (locking system)	HIDF15000153
MARQUARDT	DC12A (locking system)	RDDK/33A/0317/S(17-0669)
MARQUARDT	DC12B (locking system)	RAUU/62A/0311/S(11-0263)
MARQUARDT	DC12K (locking system)	RAUU/62A/0311/S(11-0264)

Manufacturer	Model designation	Radio equipment approval number
MARQUARDT	MS2 (locking system)	RDDK/31A/0217/S(17-0405)
MARQUARDT	MS4 (locking system)	RDDK/25B/1019/S(19-0943)
MARQUARDT	MS5 (locking system)	RGLO/02A/0720/S(20-2580)
MARQUARDT	MK1 (locking system)	CIDF19000029
MARQUARDT	MK2 (locking system)	CIDF19000029

Manufacturer	Model designation	Radio equipment approval number
MARQUARDT	3350.38 (locking system)	CIDF19000029
Meta System	ITS/TPS (interior protection)	RAVG/18Q/0212/S(11-2068)
Meta System	MUW II (interior protection)	RAVG/17Q/0212/S(11-2067)
Schrader	AG5SP4 (tire pressure sensor)	RCDD/03A/0615/S(19-2094)

Manufacturer	Model designation	Radio equipment approval number
Schrader	AG3PF4 (tire pressure sensor)	RBEF/28A/0419/S/(19-1542)
Schrader	BG3FP4 (tire pressure sensor)	RBEF/51A/0121/S/(20-5642)
Schrader	MFR (tire pressure monitoring system control unit)	RAQP/62A/0419/S(19-1694)

Manufacturer	Model designation	Radio equipment approval number
Schrader	MFR3 (tire pressure monitoring system control unit)	RAQP/62A/0419/S(19-1694)
Veoneer	77GHz MMRV1 (radar sensor)	HIDF15000153
Veoneer	77V12BSM (radar sensor)	HIDF15000153
Veoneer	77V12CRN (radar sensor)	HIDF15000153

Manufacturer	Model designation	Radio equipment approval number
Veoneer	77V125CRN (radar sensor)	HIDF15000153
WITTE-Velbert	SDHTAG3NFC (locking system)	RDDK/43B/0420/S(20-1749)

Morocco

Regulatory radio identification

Manufacturer	Model designation	Radio equipment approval number
		AGREE PAR L'ANRT MAROC
ADC	ARS4-A (radar sensor)	MR 9490 ANTR 2014-07-23
ADC	ARS4-C (radar sensor)	MR 20231 ANRT 2019-06-27
ADC	ARS441DP10 (radar sensor)	MR 20231 ANRT 2019-06-27
Bosch	FR5CPCCF (radar sensor)	MR 20575 ANRT 2019-07-29
Bosch	LRR3 (radar sensor)	MR 5371 ANRT 2010 2019-12-05
Bosch	MRR1Rear (radar sensor)	MR 9186 ANTR 2014-04-22
Bosch	MRRe14FCR (radar sensor)	MR 13900 ANTR 2017-05-04
Continental Antenna	RKE213E1 (antenna amplifier)	MR 10631 ANTR 2015-07-16
Continental Antenna	RKE223E1GNS (antenna amplifier)	MR 21174 ANTR 2019-10-14
Continental Automotive	CMKG1 (locking system)	MR 21701 ANTR 2019-12-05

Manufacturer	Model designation	Radio equipment approval number
Continental Automotive	CMKG2 (locking system)	MR 36542 ANRT 2023-02-01
Continental Automotive	MARS Keyless (locking system)	MR 13681 ANTR 2017-04-04
HELLA	DM4 (locking system)	MR 14426 ANTR 2017-07-28
Hirschmann	920287A (locking system)	MR 6700 ANTR 2011-11-16
Hirschmann	920287B (locking system)	MR 7260 ANTR 2012-06-13
Hirschmann	920702A (locking system)	MR 32214 ANTR 2022-03-08

Manufacturer	Model designation	Radio equipment approval number
Huf Baolong	TSSRE4A (tire pressure monitoring system control unit)	MR 14320 ANTR 2017-07-07
Huf Baolong	TSSSG4G6b (tire pressure monitoring system control unit)	MR 19561 ANTR 2019-04-26
HUF	HUF13145 (locking system)	MR 32395 ANRT 2022-03-24
HUF	HUF14632 (locking system)	MR 10506 ANTR 2015-06-22
HUF	HUF4761 (locking system)	MR 7829 ANTR 2013-02-14

Manufacturer	Model designation	Radio equipment approval number
LEOPOLD KOSTAL	KK1 (locking system)	MR 10697 ANTR 2015-08-05
MARQUARDT	DC12A (locking system)	MR 13429 ANTR 2017-03-03
MARQUARDT	DC12B (locking system)	MR 6698 ANTR 2021-11-04
MARQUARDT	DC12K (locking system)	MR 6699 ANTR 2021-11-04
MARQUARDT	MS2 (locking system)	MR 13300 ANTR 2017-02-15
MARQUARDT	MS4 (locking system)	MR 19199 ANTR 2019-03-25

Manufacturer	Model designation	Radio equipment approval number
MARQUARDT	MS5 (locking system)	MR 23805 ANRT 2020-04-22
MARQUARDT	MK1 (locking system)	MR 10645 ANTR 2015-07-21
MARQUARDT	MK2 (locking system)	MR 10987 ANTR 2015-10-22
MARQUARDT	3350.38 (locking system)	MR 18817 ANTR 2019-02-12
Schrader	AG5SP4 (tire pressure monitoring system control unit)	MR 10216 ANRT 2015

Manufacturer	Model designation	Radio equipment approval number
Schrader	AG3PF4 (tire pressure sensor)	MR 19241 ANRT 2019
Schrader	BG3FP4 (tire pressure sensor)	MR00026829 ANRT2020
Schrader	MFR (tire pressure monitoring system control unit)	MR 19527 ANRT 2019-04-30
Schrader	MFR3 (tire pressure monitoring system control unit)	MR 19527 ANRT 2019
Schrader	GG4T (tire pressure sensor)	MR 14777 ANRT 2017-09-20

Manufacturer	Model designation	Radio equipment approval number
Schrader	DG6W2D4 (tire pressure sensor)	MR 16355 ANRT 2018-04-19
Schrader	MC34MA4 (tire pressure monitoring system control unit)	MR 6706 ANRT 2011-11-17
Veoneer	77GHz MMRV1 (radar sensor)	MR 10436 ANRT 2015-05-25
Veoneer	77V12BSM (radar sensor)	MR 20097 ANRT 2019-06-14
Veoneer	77V12CRN (radar sensor)	MR 20149 ANRT 2019-06-19

Manufacturer	Model designation	Radio equipment approval number
Veoneer	77V125CRN (radar sensor)	MR 27966 ANRT 2021-03-29
WITTE-Velbert	SDHTAG3NFC (locking system)	MR 23310 ANRT 2020-03-10

Mexico

Regulatory radio identification

NOM	NYCE	ANCE
Manufacturer	Model designation	Radio equipment approval number
ADC	ARS4-A (radar sensor)	IFETEL: RCPCOAR14-1191
ADC	ARS4-C (radar sensor)	IFETEL: RLVCOR19-1062
ADC	ARS441DP10 (radar sensor)	IFETEL: RLVCOR19-1062
Bosch	LRR3 (radar sensor)	IFETEL: RCPBOLR09-0828

NOM	NYCE	ANCE
Manufacturer	Model designation	Radio equipment approval number
Bosch	MRR1Rear (radar sensor)	IFETEL: RCPBOMR14-0922
Bosch	MRRe14FCR (radar sensor)	IFETEL: RCPBOMR17-0598
Continental Antenna	RKE213E1 (antenna amplifier)	IFETEL: RLVKARK15-1741
Continental Antenna	RKE223E1 (antenna amplifier)	IFETEL: RLVCORK19-2174

Manufacturer	Model designation	Radio equipment approval number
Continental Automotive	CMKG1 (locking system)	IFETEL: RCPCOCM19-2315
Continental Automotive	CMKG2 (locking system)	IFETEL: COCOCM22-31003
Continental Automotive	MARS Keyless (locking system)	IFETEL: RLVDAMA18-1827
Continental Automotive	UWBTRX1 (locking system)	IFETEL: MECOCM22-17609

Manufacturer	Model designation	Radio equipment approval number
Continental Automotive Technologies	NTG7Q MID LF2 (head unit)	IFETEL: MEMENT23 - 12200
Continental Automotive Technologies	NTG7Q HIGH LF2 (head unit)	IFETEL: MEMENT23 - 11923
Continental Automotive Technologies	NTG7Q PREMIUM LF2 (head unit)	IFETEL: MEMENT23 - 12204
Gentex	MUAHL 5 (convenience system)	IFETEL: RCPGEMU15-0448

Manufacturer	Model designation	Radio equipment approval number
HELLA	DM4 (locking system)	IFETEL: RLVHEDM17-10
Hirschmann	920287A (locking system)	IFETEL: RLVHI9211-0472
Hirschmann	920287B (locking system)	IFETEL: RLVHI9212-0608
Hirschmann	920702A (locking system)	IFETEL: RLVHI9222-2674

NOM	NYCE	ANCE
Manufacturer	Model designation	Radio equipment approval number
Huf Baolong	TSSRE4A (tire pressure sensor)	IFETEL: RLVHUTS17-0806
HUF	HUF13145 (locking system)	IFETEL: RCPHUHU22-2505
HUF	HUF14632 (locking system)	IFETEL: RLVHUHU15-1204
HUF	HUF4761 (locking system)	IFETEL: RLVHUHU12-1587

NOM	NYCE	ANCE
Manufacturer	Model designation	Radio equipment approval number
LEOPOLD KOSTAL	KK1 (locking system)	IFETEL: RLVKOKK15-0891
MARQUARDT	DC12A (locking system)	IFETEL: RLVMEDC17-0348
MARQUARDT	DC12B (locking system)	IFETEL: RLVMADC11-0446
MARQUARDT	DC12K (interior protection)	IFETEL: RLVMADC11-0446

NOM	NYCE	ANCE
Manufacturer	Model designation	Radio equipment approval number
MARQUARDT	MS2 (locking system)	IFETEL: RLVMAMS17-0222
MARQUARDT	MS4 (locking system)	IFETEL: RLVMAMS19-0449
MARQUARDT	MS5 (locking system)	IFETEL: RLVMEMS20-0957
MARQUARDT	MK1 (locking system)	IFETEL: RLVMAMK15-1042

Manufacturer	Model designation	Radio equipment approval number
MARQUARDT	MK2 (locking system)	IFETEL: RLVMAMK15-1043
MARQUARDT	3350.38 (locking system)	IFETEL: RCPMA3319-0530
Schrader	AG5SP4 (tire pressure sensor)	IFETEL: RCPSCAG15-0627
Schrader	AG3PF4 (tire pressure sensor)	IFETEL: RLVSCAG19-0705

Manufacturer	Model designation	Radio equipment approval number
Schrader	BG3FP4 (tire pressure sensor)	IFETEL: RLVSCBG21-0750
Schrader	MFR (tire pressure sensor)	IFETEL: RLVSCMF15-0959
Schrader	MFR3 (tire pressure sensor)	IFETEL: RLVSCMF19-0777
Schrader	GG4T (tire pressure sensor)	IFETEL: RLVSCGG17-1665

Manufacturer	Model designation	Radio equipment approval number
Schrader	DG6W2D4 (tire pressure sensor)	IFETEL: RLVSCDG18-04
Schrader	MC34MA4 (tire pressure monitoring system control unit)	IFETEL: RCPSCMR14-062
Sennheiser	M3IETW2R (Earbud)	IFETEL: RCPSEM320-0435-A1
Sennheiser	M3IETW2L (Earbud)	IFETEL: RCPSEM320-0435

Manufacturer	Model designation	Radio equipment approval number
Sennheiser	BTT100 (Bluetooth Audio Transmitter)	IFETEL: RCPSEBT18-1407
WITTE-Velbert	SDHTAG3NFC (locking system)	IFETEL: RCPWISD20-0943

Mongolia

Regulatory radio identification

Manufacturer	Model designation	Radio equipment approval number
Continental Automotive	CMKG1 (locking system)	A19000633
Continental Automotive	CMKG2 (locking system)	A23000900
Continental Automotive	MARS Keyless (locking system)	A18000328
HELLA	DM4 (locking system)	A18000329

Manufacturer	Model designation	Radio equipment approval number
Hirschmann	920702A (locking system)	A22000649
HUF	HUF13145 (locking system)	A22000674
MARQUARDT	DC12A (locking system)	A19000400
MARQUARDT	DC12B (locking system)	A19000371
MARQUARDT	DC12K (locking system)	A19000372

Manufacturer	Model designation	Radio equipment approval number
MARQUARDT	MS2 (locking system)	A18000289
MARQUARDT	MS4 (locking system)	A19000516
MARQUARDT	MS5 (locking system)	A20000085
MARQUARDT	MK1 (locking system)	A19000374
MARQUARDT	MK2 (locking system)	A19000374

Manufacturer	Model designation	Radio equipment approval number
MARQUARDT	3350.38 (locking system)	A19000401
WITTE-Velbert	SDHTAG3NFC (locking system)	A20000067

Niger

Regulatory radio identification

Manufacturer	Model designation	Radio equipment approval number
Continental Antenna	RKE213E1 (antenna amplifier)	029/ARCEP/DG/19
Continental Automotive	MARS Keyless (locking system)	083/ARCEP/DG/19
HELLA	DM4 (locking system)	082/ARCEP/DG/19
Hirschmann	920287A (locking system)	097/ARCEP/DG/19
Hirschmann	920287B (locking system)	098/ARCEP/DG/19

Manufacturer	Model designation	Radio equipment approval number
HUF	HUF4761 (locking system)	053/ARCEP/DG/19
LEOPOLD KOSTAL	KK1 (locking system)	037/ARCEP/DG/19
MARQUARDT	DC12A (locking system)	010/ARCEP/DG/19
MARQUARDT	DC12B (locking system)	008/ARCEP/DG/19
MARQUARDT	DC12K (locking system)	009/ARCEP/DG/19
MARQUARDT	MS2 (locking system)	014/ARCEP/DG/19

Manufacturer	Model designation	Radio equipment approval number
MARQUARDT	MS4 (locking system)	HOMO-0096/ARCEP/DG/2019
MARQUARDT	MK1 (locking system)	034/ARCEP/DG/19
MARQUARDT	MK2 (locking system)	035/ARCEP/DG/19
MARQUARDT	3350.38 (locking system)	015/ARCEP/DG/19
MARQUARDT	MU1 (locking system)	HOMO-0095/ARCEP/DG/2019

Nigeria

Regulatory radio identification

Manufacturer	Model designation
ADC	ARS4-A (radar sensor)
ADC	ARS4-C (radar sensor)
Bosch	FR5CPCCF (radar sensor)
Bosch	MRR1Rear (radar sensor)
Bosch	MRRe14FCR (radar sensor)
Continental Antenna	RKE213E1 (antenna amplifier)
Continental Antenna	RKE223E1GNS (antenna amplifier)
Continental Automotive	CMKG1 (locking system)

Manufacturer	Model designation
Continental Automotive	CMKG2 (locking system)
Continental Automotive	MARS Keyless (locking system)
HELLA	DM4 (locking system)
Hirschmann	920287A (locking system)
Hirschmann	920287B (locking system)
Hirschmann	920702A (locking system)
HUF	HUF13145 (locking system)
HUF	HUF14632 (locking system)
HUF	HUF4761 (locking system)

Manufacturer	Model designation
LEOPOLD KOSTAL	KK1 (locking system)
MARQUARDT	DC12A (locking system)
MARQUARDT	DC12B (locking system)
MARQUARDT	DC12K (locking system)
MARQUARDT	MS2 (locking system)
MARQUARDT	MS4 (locking system)
MARQUARDT	MS5 (locking system)
MARQUARDT	MK1 (locking system)
MARQUARDT	MK2 (locking system)
MARQUARDT	3350.38 (locking system)
Schrader	AG3PF4 (tire pressure sensor)

Manufacturer	Model designation
Schrader	BG3FP4 (tire pressure sensor)
Schrader	MFR3 (control unit)
Veoneer	77V12BSM (radar sensor)
Veoneer	77V12CRN (radar sensor)
Veoneer	77V125CRN (radar sensor)
WITTE-Velbert	SDHTAG3NFC (locking system)

Oman

Regulatory radio identification

Manufacturer	Model designation	Radio equipment approval number
ADC	ARS4-A (radar sensor)	TRA/TA-R/2016/14 D080134
ADC	ARS4-C (radar sensor)	TRA/TA-R/7769/19 D172338
Bosch	FR5CPCCF (radar sensor)	TRA/TA-R/7983/19 D172338
Bosch	LRR3 (radar sensor)	TRA/TA-R/1049/09
Bosch	MRR1Rear (radar sensor)	TRA/TA-R/1849/14
Bosch	MRRe14FCR (radar sensor)	TRA/TA-R/4353/17
Continental Antenna	RKE213E1 (antenna amplifier)	TRA/TA-R/2715/15 D090258
Continental Antenna	RKE223E1GNS (antenna amplifier)	TRA/TA-R/8337/19 D172338
Continental Automotive	CMKG1 (locking system)	TRA/TA-R/8642/19 D172338
Continental Automotive	CMKG2 (locking system)	TRA/TA-R/15164/23 D100428
Continental Automotive	MARS Keyless (locking system)	TRA/TA-R/4158/17 D080134
HELLA	DM4 (locking system)	TRA/TA-R/4548/17 D080134
Hirschmann	920287A (locking system)	TRA/TA-R/0210/11 D080353
Hirschmann	920287B (locking system)	TRA/TA-R/0655/12 D080353
Hirschmann	920702A (locking system)	TRA/TA-R/13300/22 D172338

Manufacturer	Model designation	Radio equipment approval number
Huf Baolong	TSSRE4A (tire pressure sensor)	TRA/TA-R/4516/17 D100428
Huf Baolong	TSSSG4G6b (tire pressure sensor)	TTRA/TA-R/7506/19
HUF	HUF13145 (locking system)	TRA/TA-R/13465/22
HUF	HUF14632 (locking system)	TRA/TA-R/2665/15
HUF	HUF4761 (locking system)	TRA/TA-R/0920/12
LEOPOLD KOSTAL	KK1 (locking system)	TRA/TA-R/3129/16

Manufacturer	Model designation	Radio equipment approval number
MARQUARDT	DC12A (locking system)	TRA/TA-RD/4056/17 D100428
MARQUARDT	DC12B (locking system)	TRA/TA-R/0227/11 D080353
MARQUARDT	DC12K (locking system)	TRA/TA-R/0228/11 D080353
MARQUARDT	MS2 (locking system)	TRA/TA-R/4136/17 D080134
MARQUARDT	MS4 (locking system)	TRA/TA-R/7316/19 D172249

Manufacturer	Model designation	Radio equipment approval number
MARQUARDT	MS5 (locking system)	TRA/TA-R/9324/20 D100428
MARQUARDT	MK1 (locking system)	TRA/TA-R/2848/15 D080353
MARQUARDT	MK2 (locking system)	TRA/TA-R/2900/15 D080353
MARQUARDT	3350.38 (locking system)	TRA/TA-R/7051/19 D172249
Schrader	AG5SP4 (tire pressure sensor)	TTRA R/2380/15 D080134

Manufacturer	Model designation	Radio equipment approval number
Schrader	AG3PF4 (tire pressure sensor)	TRA R/7287/19 D172338
Schrader	BG3FP4 (tire pressure sensor)	TRA/TA-R/10694/20 D172338
Schrader	MFR (tire pressure monitoring system control unit)	TRA/TA-R/7464/19 D090258
Schrader	MFR3 (tire pressure monitoring system control unit)	TRA/TA-R/7467/19 D090258

Manufacturer	Model designation	Radio equipment approval number
Schrader	GG4T (tire pressure sensor)	TRA/TA-R/4686/17 D080134
Schrader	DG6W2D4 (tire pressure sensor)	TRA/TA-R/5511/18 D172249
Sennheiser	M3IETW2R (Earbud)	TRA/TA-R/10988/21
Sennheiser	BTT100 (Bluetooth Audio Transmitter)	TRA/TA-R/10976/21
Veoneer	77GHz MMRV1 (radar sensor)	TRA/TA-R/2706/15
Veoneer	77V12BSM (radar sensor)	TRA/TA-R/7706/19 D172338

Manufacturer	Model designation	Radio equipment approval number
Veoneer	77V12CRN (radar sensor)	TRA/TA-R/7707/19 D172338
Veoneer	77V125CRN (radar sensor)	TRA/TA-R/11335/21 D172338
WITTE-Velbert	SDHTAG3NFC (locking system)	TRA/TA-R/9150/20

Pakistan

Regulatory radio identification

Manufacturer	Model designation	Radio equipment approval number
ADC	ARS4-A (radar sensor)	TAC NO: 9.9014/2019
ADC	ARS4-C (radar sensor)	TAC NO: 9.9389/2019
Bosch	FR5CPCCF (radar sensor)	TAC NO: 9.198/2020
Continental Antenna	RKE213E1 (antenna amplifier)	TAC NO: 9.142/2016

Manufacturer	Model designation	Radio equipment approval number
Continental Antenna	RKE223E1GNS (antenna amplifier)	TAC NO: 9.100169/2019
Continental Automotive	CMKG1 (locking system)	TAC NO:9.100175/2019
Continental Automotive	CMKG2 (locking system)	TAC NO: 9.153/2023
Continental Automotive	MARS Keyless (locking system)	TAC NO: 9.213/2017
Continental Automotive	D-WMI2020A (control unit)	TAC NO: 9.9836/2019

Manufacturer	Model designation	Radio equipment approval number
HELLA	DM4 (locking system)	TAC NO: 9.409/2017
Hirschmann	920287A (locking system)	TAC NO: 9.845/2013
Hirschmann	920287B (locking system)	TAC NO: 9.846/2013
Hirschmann	920702A (locking system)	TAC NO. 9.412/2022
HUF Baolong	TSSRE4A (tire pressure sensor)	TAC NO: 9.620/2017

Manufacturer	Model designation	Radio equipment approval number
HUF	HUF14632 (locking system)	TAC NO: 9.598/2015
HUF	HUF4761 (locking system)	TAC NO: 9.790/2013
LEOPOLD KOSTAL	KK1 (locking system)	TAC NO: 9.118/2016
MARQUARDT	DC12A (locking system)	TAC NO: 9.131/2017
MARQUARDT	DC12B (locking system)	TAC NO: 9.829/2013

Manufacturer	Model designation	Radio equipment approval number
MARQUARDT	DC12K (locking system)	TAC NO: 9.830/2013
MARQUARDT	MS2 (locking system)	TAC NO: 9.133/2017
MARQUARDT	MS4 (locking system)	TAC NO: 9.100171/2019
MARQUARDT	MS5 (locking system)	TAC.NO: 9.774/2020
MARQUARDT	MK1 (locking system)	TAC NO: 9.486/2015
MARQUARDT	MK2 (locking system)	TAC NO: 9.497/2015

Manufacturer	Model designation	Radio equipment approval number
Schrader	AG3PF4 (tire pressure sensor)	TAC NO:9.039/2016
Schrader	AG5SP4 (tire pressure sensor)	TAC NO:9.9167/2019
Schrader	BG3FP4 (tire pressure sensor)	TAC NO:9.68/2021
Schrader	GG4T (tire pressure sensor)	TAC NO:9.538/2017

Manufacturer	Model designation	Radio equipment approval number
Schrader	DG6W2D4 (tire pressure sensor)	TAC NO: 9.789/2018
Veoneer	77GHz MMRV1 (radar sensor)	TAC NO: 9.9284/2019
Veoneer	77V12BSM (radar sensor)	TAC NO: 9.9391/2019
Veoneer	77V12CRN (radar sensor)	TAC NO: 9.9391/2019

Manufacturer	Model designation	Radio equipment approval number
Veoneer	77V125CRN (radar sensor)	TAC NO: 9.477/2021
WITTE-Velbert	SDHTAG3NFC (locking system)	TAC NO: 9.527/2020

Paraguay

Regulatory radio identification

Manufacturer	Model designation	Radio equipment approval number
ADC	ARS4-A (radar sensor)	CONATEL 2019-05-I-0271
ADC	ARS4-C (radar sensor)	CONATEL 2019-11-I-0602

Manufacturer	Model designation	Radio equipment approval number
ADC	ARS4-C (radar sensor)	CONATEL 2019-11-I-0602
Bosch	FR5CPCCF (radar sensor)	CONATEL 2019-09-I-0508
Bosch	MRRe14FCR (radar sensor)	CONATEL 2017-06-I-0000162

Manufacturer	Model designation	Radio equipment approval number
Bosch	MRR1Rear (radar sensor)	CONATEL 2019-05-I-000236
Continental Antenna	RKE213E1 (antenna amplifier)	CONATEL 2021-02-I-00101 y 2016-02-I-0000038

Manufacturer	Model designation	Radio equipment approval number
Continental Antenna	RKE223E1GNS (antenna amplifier)	CONATEL 2019-12-I-0656
Continental Automotive	CMKG1 (locking system)	CONATEL 2020-02-I-0110
Continental Automotive	CMKG2 (locking system)	CONATEL 2023-03-I-0153

Manufacturer	Model designation	Radio equipment approval number
Continental Automotive	MARS Keyless (locking system)	CONATEL 2017-05-I-0000136 y
HELLA	DM4 (locking system)	CONATEL 2022-06-I-0388 y 2017-08-I-0000261

Manufacturer	Model designation	Radio equipment approval number
Hirschmann	920287A (locking system)	CONATEL 2016-5-I-000134 y 2011-06-I-0059
Hirschmann	920287B (locking system)	CONATEL 2017-04-I-0000119 y 2012-05-I-0096

Manufacturer	Model designation	Radio equipment approval number
Hirschmann	920702A (locking system)	CONATEL 2022-03-I-0149
Huf Baolong	TSSRE4A (tire pressure sensor)	CONATEL 2017-09-I-0000328
HUF	HUF13145 (locking system)	CONATEL 2022-04-I-0235

Manufacturer	Model designation	Radio equipment approval number
HUF	HUF14632 (locking system)	CONATEL 2020-06-I-0284 y 2015-08-I-0000226
HUF	HUF4761 (locking system)	CONATEL 2017-12-I-0000409 y 2012-10-I-0178

Manufacturer	Model designation	Radio equipment approval number
LEOPOLD KOSTAL	KK1 (locking system)	CONATEL 2015-06-I-0000181
MARQUARDT	DC12A (locking system)	CONATEL 2020-12-I-0898 y 2015-06-I-0000181

Manufacturer	Model designation	Radio equipment approval number
MARQUARDT	DC12B (locking system)	CONATEL 2021-05-I-0304; 2016-5-I-000144 y 2011-06-I-0067
MARQUARDT	DC12K (locking system)	CONATEL 2021-05-I-0305; 2016-5-I-000143 y 2011-06-I-0068

Manufacturer	Model designation	Radio equipment approval number
MARQUARDT	MS2 (locking system)	CONATEL 2017-04-I-0000101
MARQUARDT	MS4 (locking system)	CONATEL 2019-10-I-0581
MARQUARDT	MS5 (locking system)	CONATEL 2020-08-I-0604

Manufacturer	Model designation	Radio equipment approval number
MARQUARDT	MK1 (locking system)	CONATEL 2020-07-I-0390 y 2015-07-I-0000200
MARQUARDT	MK2 (locking system)	CONATEL 2020-07-I-0391 y 2015-07-I-0000201

Manufacturer	Model designation	Radio equipment approval number
MARQUARDT	3350.38 (locking system)	CONATEL 2019-04-I-000216
Schrader	AG5SP4 (tire pressure sensor)	CONATEL 2015-04-I-0000150
Schrader	AG3PF4 (tire pressure sensor)	CONATEL 2019-05-1-00 0261

Manufacturer	Model designation	Radio equipment approval number
Schrader	BG3FP4 (tire pressure sensor)	CONATEL 2021-02-I-0063
Schrader	GG4T (tire pressure sensor)	CONATEL 2020-02-1-0044
Schrader	DG6W2D4 (tire pressure sensor)	CONATEL 2019-11-1-0632

Manufacturer	Model designation	Radio equipment approval number
Veoneer	77GHz MMRV1 (radar sensor)	CONATEL 2020-07-I-0510
Veoneer	77V12BSM (radar sensor)	CONATEL 2019-07-I-0399
Veoneer	77V12CRN (radar sensor)	CONATEL 2019-07-I-0398

Manufacturer	Model designation	Radio equipment approval number
Veoneer	77V125CRN (radar sensor)	CONATEL 2021-04-I-0188
WITTE-Velbert	SDHTAG3NFC (locking system)	CONATEL 2020-06-I-0326

Further specific information

Charging unit for the wireless charging of mobile devices (WMI):

D-WMI2020A:

This vehicle is equipped with the following radio frequency component approved by CONATEL - Paraguay: Wireless interface for mobile devices,

Continental brand, model D-WMI2020A, manufactured by Continental Automotive GmbH.

Radio equipment approval number: 2019-11-I-0600

Rear Seat Entertainment System:

DAIRSE:

Importer: Condor S.A.C.I Casa Central, J.B. Gorostiaga 315 y Guaraníes, Asunción, Paraguay, (595 21) 569 7000, sac@condor.com.py

Philippines

Regulatory radio identification

Manufacturer	Model designation	Radio equipment approval number
ADC	ARS4-A (radar sensor)	ESD-1409466 C
ADC	ARS4-C (radar sensor)	ESD-1920226 C
Bosch	FR5CPCCF (radar sensor)	ESD-1920531 C
Bosch	MRR1Rear (radar sensor)	ESD-1408917 C
Bosch	MRRe14FCR (radar sensor)	ESD-1716172 C

Manufacturer	Model designation	Radio equipment approval number
Continental Antenna	RKE213E1 (antenna amplifier)	ESD-1511856 C
Continental Antenna	RKE223E1GNS (antenna amplifier)	ESD-1921015 C
Continental Automotive	CMKG1 (locking system)	ESD-2021556 C
Continental Automotive	CMKG2 (locking system)	ESD-RCE-2332806
Continental Automotive	MARS Keyless (locking system)	ESD-1714865 C

Manufacturer	Model designation	Radio equipment approval number
HELLA	DM4 (locking system)	ESD-1715539 C
Hirschmann	920287A (locking system)	ESD-1105246 C
Hirschmann	920287B (locking system)	ESD-1206044 C
Hirschmann	920702A (locking system)	ESD-RCE-2229632
Huf Baolong	TSSRE4A (tire pressure sensor)	ESD-1715393 C

Manufacturer	Model designation	Radio equipment approval number
HUF	HUF13145 (locking system)	ESD-RCE-2229722
HUF	HUF14632 (locking system)	ESD-1511236 C
HUF	HUF4761 (locking system)	ESD-1206521 C
LEOPOLD KOSTAL	KK1 (locking system)	ESD-1510698 C
MARQUARDT	DC12A (locking system)	ESD-1714489 C

Manufacturer	Model designation	Radio equipment approval number
MARQUARDT	DC12B (locking system)	ESD-1105216 C
MARQUARDT	DC12K (locking system)	ESD-1105215 C
MARQUARDT	MS2 (locking system)	ESD-1715652 C
MARQUARDT	MS4 (locking system)	ESD-1919133 C
MARQUARDT	MS5 (locking system)	ESD-2022426 C
MARQUARDT	MK1 (locking system)	ESD-1510644 C

Manufacturer	Model designation	Radio equipment approval number
MARQUARDT	MK2 (locking system)	ESD-1510645 C
MARQUARDT	3350.38 (locking system)	ESD-1919198 C
Schrader	AG5SP4 (tire pressure sensor)	ESD-1715393 C
Schrader	AG3PF4 (tire pressure sensor)	ESD-1919585 C
Schrader	BG3FP4 (tire pressure sensor)	ESD-RCE-2124846

Manufacturer	Model designation	Radio equipment approval number
Schrader	GG4T (tire pressure sensor)	ESD-1715977 C
Schrader	DG6W2D4 (tire pressure sensor)	ESD-1817081 C
Veoneer	77GHz MMRV1 (radar sensor)	ESD-1510921 C
WITTE-Velbert	SDHTAG3NFC (locking system)	ESD-2022599 C

Zambia

Regulatory radio identification

Manufacturer	Model designation	Radio equipment approval number
Continental Antenna	RKE223E1 (antenna amplifier)	ZMB/ ZICTA/TA/ 2019/3/11
Continental Automotive	MARS Keyless (locking system)	ZMB/ ZICTA/TA/ 2019/3/3
HELLA	DM4 (locking system)	ZMB/ ZICTA/TA/ 2019/3/4
Hirschmann	920287A (locking system)	ZMB/ ZICTA/TA/ 2019/7/12

Manufacturer	Model designation	Radio equipment approval number
Hirschmann	920287B (locking system)	ZMB/ ZICTA/TA/ 2019/7/11
HUF	HUF4761 (locking system)	ZMB/ ZICTA/TA/ 2018/12/18
LEOPOLD KOSTAL	KK1 (locking system)	ZMB/ ZICTA/TA/ 2019/3/48
MARQUARDT	DC12A (locking system)	ZMB/ ZICTA/TA/ 2019/5/16

Manufacturer	Model designation	Radio equipment approval number
MARQUARDT	DC12B (locking system)	ZMB/ ZICTA/TA/ 2019/5/17
MARQUARDT	DC12K (locking system)	ZMB/ ZICTA/TA/ 2019/5/18
MARQUARDT	MS2 (locking system)	ZMB/ ZICTA/TA/ 2018/9/30
MARQUARDT	MS4 (locking system)	ZMB/ ZICTA/TA/ 2019/7/123

Manufacturer	Model designation	Radio equipment approval number
MARQUARDT	MK1 (locking system)	ZMB/ ZICTA/TA/ 2019/3/20
MARQUARDT	MK2 (locking system)	ZMB/ ZICTA/TA/ 2019/3/21
MARQUARDT	3350.38 (locking system)	ZMB/ ZICTA/TA/ 2019/3/6
MARQUARDT	MU1 (locking system)	ZMB/ ZICTA/TA/ 2019/7/124

Serbia

Regulatory radio identification

Manufacturer	Model designation	Radio equipment approval number
ADC	ARS4-A (radar sensor)	И011 20
ADC	ARS4-C (radar sensor)	И011 19
Bosch	FR5CPCCF (radar sensor)	И011 19
Bosch	LRR3 (radar sensor)	И011 19
Bosch	MRR1Rear (radar sensor)	И011 17

Manufacturer	Model designation	Radio equipment approval number
Bosch	MRRe14FCR (radar sensor)	И005 17
Continental Antenna	RKE213E1 (antenna amplifier)	И005 21
Continental Antenna	RKE223E1GNS (antenna amplifier)	И005 22
Continental Automotive	CMKG1 (locking system)	И005 20
Continental Automotive	CMKG2 (locking system)	И005 23

Manufacturer	Model designation	Radio equipment approval number
Continental Automotive	MARS Keyless (locking system)	И005 20
Continental Automotive Technologies	NTG7Q MID LF2 (head unit)	И005 23
Continental Automotive Technologies	NTG7Q HIGH LF2 (head unit)	И005 23
Continental Automotive Technologies	NTG7Q PREMIUM LF2 (head unit)	И005 23
HELLA	DM4 (locking system)	И005 20

Manufacturer	Model designation	Radio equipment approval number
Hirschmann	920287A (locking system)	И005 18
Hirschmann	920287B (locking system)	И005 18
Hirschmann	920702A (locking system)	И005 22
Huf Baolong	TSSRE4A (tire pressure sensor)	И005 20

Manufacturer	Model designation	Radio equipment approval number
HUF	HUF13145 (locking system)	И005 22
HUF	HUF14632 (locking system)	И005 21
HUF	HUF4761 (locking system)	И005 21
LEOPOLD KOSTAL	KK1 (locking system)	И005 18
MARQUARDT	DC12A (locking system)	И005 20

Manufacturer	Model designation	Radio equipment approval number
MARQUARDT	DC12B (locking system)	И005 20
MARQUARDT	DC12K (locking system)	И005 20
MARQUARDT	MS2 (locking system)	И011 17
MARQUARDT	MS4 (locking system)	И005 19
MARQUARDT	MS5 (locking system)	И005 20
MARQUARDT	MK1 (locking system)	И005 21

Manufacturer	Model designation	Radio equipment approval number
MARQUARDT	MK2 (locking system)	И005 21
MARQUARDT	3350.38 (locking system)	И005 22
Meta System	MUW II (interior protection)	И011 19
Schrader	AG5SP4 (tire pressure sensor)	И005 15
Schrader	AG3PF4 (tire pressure sensor)	И005 15

Manufacturer	Model designation	Radio equipment approval number
Schrader	BG3FP4 (tire pressure sensor)	И005 20
Schrader	GG4T (tire pressure sensor)	И005 17
Schrader	DG6W2D4 (tire pressure sensor)	И005 18
Schrader	MC34MA4 (tire pressure monitoring system control unit)	И011 11

Manufacturer	Model designation	Radio equipment approval number
Veoneer	77GHz MMRV1 (radar sensor)	И011 18
Veoneer	77V12BSM (radar sensor)	И011 19
Veoneer	77V12CRN (radar sensor)	И011 19
Veoneer	77V125CRN (radar sensor)	И038 21
WITTE-Velbert	SDHTAG3NFC (locking system)	И005 20

Singapore

Regulatory radio identification

Manufacturer	Model designation	Radio equipment approval number
		Complies with IMDA Standards
ADC	ARS4-A (radar sensor)	DA103365
ADC	ARS4-C (radar sensor)	DA103365
Bosch	FR5CPCCF (radar sensor)	DA103365
Bosch	LRR3 (radar sensor)	DA103365
Bosch	MRR1Rear (radar sensor)	DA103365
Bosch	MRRe14FCR (radar sensor)	DA103365
Continental Antenna	RKE213E1 (antenna amplifier)	DA105282
Continental Antenna	RKE223E1GNS (antenna amplifier)	DA107248
Continental Automotive	CMKG1 (locking system)	DA103365
Continental Automotive	CMKG2 (locking system)	DB106440
Continental Automotive	MARS Keyless (locking system)	DA105282
Continental Automotive	UWBTRX1 (locking system)	DB107091
Continental Automotive	D-WMI2020A (control unit)	DA103365
Continental Automotive Technologies	NTG7Q MID LF2 (head unit)	DA105282
Continental Automotive Technologies	NTG7Q HIGH LF2 (head unit)	DA105282
Continental Automotive Technologies	NTG7Q PREMIUM LF2 (head unit)	DA105282
Harman Becker	HERMES 3.0 (communication module)	DB107091

Manufacturer	Model designation	Radio equipment approval number
HELLA	DM4 (locking system)	DA103365 N3308-22
Hirschmann	920287A (locking system)	DA103365
Hirschmann	920287B (locking system)	DA103365
Hirschmann	920702A (locking system)	DA105282
HUF Baolong	TSSRE4A (tire pressure sensor)	DA30668
HUF Baolong	TSSSG4G6b (tire pressure sensor)	DA28467

Manufacturer	Model designation	Radio equipment approval number
HUF	HUF14632 (locking system)	DA105282
HUF	HUF4761 (locking system)	DA103365
LEOPOLD KOSTAL	KK1 (locking system)	DA103365
MARQUARDT	DC12A (locking system)	DA103787
MARQUARDT	DC12B (locking system)	DA103365
MARQUARDT	DC12K (locking system)	DA103365
MARQUARDT	MS2 (locking system)	DA103787

Manufacturer	Model designation	Radio equipment approval number
MARQUARDT	MS4 (locking system)	DA103787
MARQUARDT	MS5 (locking system)	DB107091
MARQUARDT	MK1 (locking system)	DA103365
MARQUARDT	MK2 (locking system)	DA103365
MARQUARDT	3350.38 (locking system)	DA103787
Meta System	ITS/TPS (interior protection)	DA103365
Meta System	MUW II (interior protection)	DA103365

Manufacturer	Model designation	Radio equipment approval number
Schrader	AG5SP4 (tire pressure sensor)	DA103787
Schrader	AG3PF4 (tire pressure sensor)	DA107968
Schrader	BG3FP4 (tire pressure sensor)	DA103365
Schrader	GG4T (tire pressure sensor)	DA105282
Schrader	DG6W2D4 (tire pressure sensor)	DA105282
Veoneer	77GHz MMRV1 (radar sensor)	DA103365

Manufacturer	Model designation	Radio equipment approval number
Veoneer	77V12BSM (radar sensor)	DA103365
Veoneer	77V12CRN (radar sensor)	DA103365
Veoneer	77V125CRN (radar sensor)	DA103365
WITTE-Velbert	SDHTAG3NFC (locking system)	DA107248

South Africa

Regulatory radio identification

Manufacturer	Model designation	Radio equipment approval number
ADC	ARS4-A (radar sensor)	TA-2014/1637
ADC	ARS4-C (radar sensor)	TA-2019/1595
Bosch	FR5CPCCF (radar sensor)	TA-2019/1200
Bosch	MRR1Rear (radar sensor)	TA-2014/212
Bosch	MRRe14FCR (radar sensor)	TA-2017/2013

Manufacturer	Model designation	Radio equipment approval number
Bosch	LRR3 (radar sensor)	TA-2009/464
Continental Antenna	RKE213E1 (antenna amplifier)	TA-2015/1438
Continental Antenna	RKE223E1 (antenna amplifier)	TA-2020/043
Continental Automotive	CMKG1 (locking system)	TA-2019/5405
Continental Automotive	CMKG2 (locking system)	TA-2022/3611_CMKG2

Manufacturer	Model designation	Radio equipment approval number
Continental Automotive	MARS Keyless (locking system)	TA-2016/3500
Continental Automotive	UWBTRX1 (locking system)	TA-2021/3460
Continental Automotive Technologies	NTG7Q MID LF2 (head unit)	TA-2023/0091
Continental Automotive Technologies	NTG7Q HIGH LF2 (head unit)	TA-2023/0111

Manufacturer	Model designation	Radio equipment approval number
Continental Automotive Technologies	NTG7Q PREMIUM LF2 (head unit)	TA-2023/0090
Gentex	MUAHL 5 (convenience system)	TA-2015/1386
HELLA	DM4 (locking system)	TA-2017/2518
Hirschmann	920287A (locking system)	TA-2011/374
Hirschmann	920287B (locking system)	TA-2013/1262

Manufacturer	Model designation	Radio equipment approval number
Hirschmann	920702A (locking system)	TA-2022/0162
Huf Baolong	TSSRE4A (tire pressure sensor)	TA-2017/1393
Huf Baolong	TSSSG4G6b (tire pressure sensor)	TA-2019/1440
HUF	HUF13145 (locking system)	TA-2022/0375

Manufacturer	Model designation	Radio equipment approval number
HUF	HUF14632 (locking system)	TA-2015/1077
HUF	HUF4761 (locking system)	TA-2012/1543
LEOPOLD KOSTAL	KK1 (locking system)	TA-2015/595
Meta System	ITS Master (interior protection)	TA-2011/1636
Meta System	ITS Sensor (interior protection)	TA-2011/1227

Manufacturer	Model designation	Radio equipment approval number
Meta System	MUW II (interior protection)	TA-2019/261
MARQUARDT	DC12A (locking system)	TA-2017/312
MARQUARDT	DC12B (locking system)	TA-2011/370
MARQUARDT	DC12K (locking system)	TA-2012/1542
MARQUARDT	MS2 (locking system)	TA-2016/3314
MARQUARDT	MS4 (locking system)	TA-2019/843

Manufacturer	Model designation	Radio equipment approval number
MARQUARDT	MS5 (locking system)	TA-2020/5765
MARQUARDT	MK1 (locking system)	TA-2015/179
MARQUARDT	MK2 (locking system)	TA-2015/180
MARQUARDT	3350.38 (locking system)	TA-2018/3985
Schrader	AG5SP4 (tire pressure sensor)	TA-2015/072

Manufacturer	Model designation	Radio equipment approval number
Schrader	AG3PF4 (tire pressure sensor)	TA-2019-133
Schrader	BG3FP4 (tire pressure sensor)	TA-2020/773
Schrader	MFR (control unit)	TA-2019/273
Schrader	MFR3 (control unit)	TA-2019-273
Schrader	GG4T (tire pressure sensor)	TA-2017/3884

Manufacturer	Model designation	Radio equipment approval number
Schrader	DG6W2D4 (tire pressure sensor)	TA-2017/2933
Schrader	MC34MA4 (tire pressure monitoring system control unit)	TA-2011/1370
Veoneer	77GHz MMRV1 (radar sensor)	TA-2015/2087
Veoneer	77V12BSM (radar sensor)	TA-2019/1380

Manufacturer	Model designation	Radio equipment approval number
Veoneer	77V12CRN (radar sensor)	TA-2019/1382
Veoneer	77V125CRN (radar sensor)	TA-2021/0150
WITTE-Velbert	SDHTAG3NFC (locking system)	TA-2020/055

South Korea

Regulatory radio identification

Manufacturer	Model designation	Radio equipment approval number
Continental Antenna	RKE223E1 (antenna amplifier)	R-C-Ca3-RKE223E1
Continental Automotive	CMKG2 (locking system)	R-R-TeH-CMKG2
Continental Automotive Technologies	NTG7Q LF2 (head unit)	R-R-TeH-NTG7QLF2
Huf Baolong	TSSRE4A (tire pressure sensor)	R-C-Ca3-RKE223E1

Manufacturer	Model designation	Radio equipment approval number
HUF	HUF14632 (locking system)	MSIP-CRM-HHF-HUF-14632
Schrader	MFR (control unit)	MSIP-REM-SRD-MFR
Schrader	MFR3 (control unit)	KCC R-R-SRD-MFR3A
Schrader	MC34MA4 (tire pressure monitoring system control unit)	KCC-REM-SRD-MRXMC34MA4

Manufacturer	Model designation	Radio equipment approval number
Schrader	AG5SP4 (tire pressure sensor)	MSIP-CRM-SRD-AG5SP4
Schrader	AG3PF4 (tire pressure sensor)	R-C-SRD-AG3PF4
Schrader	BG3FP4 (tire pressure sensor)	R-C-SRD-BG3FP4

Manufacturer	Model designation	Radio equipment approval number
Schrader	GG4T (tire pressure sensor)	MSIP-CRM-SRD-GG4T
Schrader	DG6W2D4 (tire pressure sensor)	R-CRM-SRD-DG6W2D4

Thailand

Regulatory radio identification

Manufacturer	Model designation	Radio equipment approval number
Continental Automotive Technologies	NTG7Q PREMIUM LF2 (head unit)	130111-23-0132 CLASS A NBTC ID.130111-23-0132

Togo

Regulatory radio identification

Manufacturer	Model designation	Radio equipment approval number
Continental Antenna	RKE223E1 (antenna amplifier)	No. 024/19
Continental Automotive	MARS Keyless (locking system)	No. 040/19
HELLA	DM4 (locking system)	No. 039/19
Hirschmann	920287A (locking system)	No. 089/19
Hirschmann	920287B (locking system)	No. 088/19
HUF	HUF4761 (locking system)	No. 041/19
LEOPOLD KOSTAL	KK1 (locking system)	No. 060/19
MARQUARDT	DC12A (locking system)	No. 055/19
MARQUARDT	DC12B (locking system)	No. 057/19
MARQUARDT	DC12K (locking system)	No. 056/19
MARQUARDT	MS2 (locking system)	No. 008/19
MARQUARDT	MS4 (locking system)	No. 101/19
MARQUARDT	MK1 (locking system)	No. 021/19
MARQUARDT	MK2 (locking system)	No. 022/19
MARQUARDT	3350.38 (locking system)	No. 016/20

Ukraine

Regulatory radio identification

Manufacturer	Model designation	Radio equipment approval number
ADC	ARS4-A (radar sensor)	UA RF: 1CONT0004
Continental Antenna	RKE213E1 (antenna amplifier)	UKR.355-123/19
Continental Antenna	RKE223E1GNS (antenna amplifier)	UA.R.TR.052.682-19
Continental Automotive	CMKG1 (locking system)	UA1.001.021175-20-TE

Manufacturer	Model designation	Radio equipment approval number
Continental Automotive	CMKG2 (locking system)	UA.032.CT.0105-23
Continental Automotive	MARS Keyless (locking system)	RTS.UKR.355-34/18
Continental Automotive Technologies	NTG7Q MID LF2 (head unit)	UA.TR.052
Continental Automotive Technologies	NTG7Q HIGH LF2 (head unit)	UA.TR.052
Continental Automotive Technologies	NTG7Q PREMIUM LF2 (head unit)	UA.TR.052

Manufacturer	Model designation	Radio equipment approval number
HELLA	DM4 (locking system)	UA.TR.109
Hirschmann	920287A (locking system)	UKR.355-7/20
Hirschmann	920287B (locking system)	UKR.355-8/20
Huf Baolong	TSSRE4A (tire pressure sensor)	UA 1.001.018568-19-TE

Manufacturer	Model designation	Radio equipment approval number
Huf Baolong	TSSSG4G6b (tire pressure monitoring system control unit)	UA 1.001.01928 9-19-TE
HUF	HUF13145 (locking system)	UKR.355-113 /19
HUF	HUF14632 (locking system)	UKR.355-113 /19
HUF	HUF4761 (locking system)	UA1.001.018 653-19-TE

Manufacturer	Model designation	Radio equipment approval number
LEOPOLD KOSTAL	KK1 (locking system)	1O094.00668 2-19
MARQUARDT	DC12A (locking system)	UA.R.TR.052. 307-19
MARQUARDT	DC12B (locking system)	UA.R.TR.052. 308-19
MARQUARDT	DC12K (locking system)	UA.R.TR.052. 309-19
MARQUARDT	MS2 (locking system)	UA1.001.019 129-19-TE
MARQUARDT	MS4 (locking system)	UA.R.TR.052. 528-19

Manufacturer	Model designation	Radio equipment approval number
MARQUARDT	MS5 (locking system)	632.16-CET
MARQUARDT	MK1 (locking system)	UA1.001.019 233-19-TE
MARQUARDT	MK2 (locking system)	UA1.001.019 234-19-TE
MARQUARDT	3350.38 (locking system)	UA1.001.018 888-19-TE
Schrader	AG5SP4 (tire pressure sensor)	UA.TR. 032

Manufacturer	Model designation	Radio equipment approval number
Schrader	AG3PF4 (tire pressure sensor)	UA-TR-001
Schrader	BG3FP4 (tire pressure sensor)	UA-TR-109
Schrader	GG4T (tire pressure sensor)	UA.TR. 028

Manufacturer	Model designation	Radio equipment approval number
Schrader	DG6W2D4 (tire pressure sensor)	UA.TR. 028
WITTE-Velbert	SDHTAG3NFC (locking system)	UA.R.TR.052.120-20

Uzbekistan

Regulatory radio identification

Manufacturer	Model designation
Continental Automotive	RKE213E1 (antenna amplifier)
Continental Automotive	RKE223E1GNS (antenna amplifier)
Continental Automotive	CMKG1 (locking system)
Continental Automotive	CMKG2 (locking system)
Continental Automotive	MARS Keyless (locking system)
HELLA	DM4 (locking system)

Manufacturer	Model designation
Hirschmann	920287A (locking system)
Hirschmann	920287B (locking system)
Hirschmann	920702A (locking system)
HUF	HUF13145 (locking system)
LEOPOLD KOSTAL	KK1 (locking system)
MARQUARDT	DC12A (locking system)
MARQUARDT	DC12B (locking system)

Manufacturer	Model designation
MARQUARDT	DC12K (locking system)
MARQUARDT	MS2 (locking system)
MARQUARDT	MS4 (locking system)
MARQUARDT	MS5 (locking system)
MARQUARDT	MK1 (locking system)
MARQUARDT	MK2 (locking system)
MARQUARDT	3350.38 (locking system)
WITTE-Velbert	SDHTAG3NFC (locking system)

United Arab Emirates

TDRA هيئة تنظيم الاتصالات والحكومة الرقمية
TELECOMMUNICATIONS AND DIGITAL GOVERNMENT REGULATORY AUTHORITY

Regulatory radio identification

Manufacturer	Model designation	Radio equipment approval number
ADC	ARS4-A (radar sensor)	TA RTTE: Er558296/17, DA40068/15
ADC	ARS4-C (radar sensor)	TA RTTE: ER77062/19, DA40068/15
Bosch	FR5CPCCF (radar sensor)	TA RTTE: ER74533/19, DA36758/14
Continental Antenna	RKE213E1 (antenna amplifier)	TRA ER64693/18, DA65993/17
Continental Antenna	RKE223E1GNS (antenna amplifier)	TRA ER76442/19, DA65993/17
Continental Automotive	CMKG1 (locking system)	TRA ER77964/20, DA0018994/09
Continental Automotive	CMKG2 (locking system)	TRA ER17713/23, DA36975/14
Continental Automotive	MARS Keyless (locking system)	TRA ER56005/17, DA44932/15
Continental Automotive	UWBTRX1 (locking system)	TRA ER11321/22, DA36975/14

Manufacturer	Model designation	Radio equipment approval number
Continental Automotive Technologies	NTG7Q MID LF2 (head unit)	TDRA ER17731/23, DA76163/18
Continental Automotive Technologies	NTG7Q HIGH LF2 (head unit)	TDRA ER17730/23, DA76163/18

Manufacturer	Model designation	Radio equipment approval number
Continental Automotive Technologies	NTG7Q PREMIUM LF2 (head unit)	TDRA ER17732/23, DA76163/18
Gentex	MUAHL 5 (convenience system)	TRA ER41849/15, DA35176/14

Manufacturer	Model designation	Radio equipment approval number
Harman Becker	HERMES 3.0 (communication module)	TRA ER03601/21, DA0028019/10
HELLA	DM4 (locking system)	TRA ER56616/17, DA44932/15
Hirschmann	920287A (locking system)	TRA ER52213/17, DA35219/14
Hirschmann	920287B (locking system)	TRA ER42011/15, DA35219/14

Manufacturer	Model designation	Radio equipment approval number
Hirschmann	920702A (locking system)	TRA ER10723/22, DA35219/14
Huf Baolong	TSSRE4A (tire pressure sensor)	TRA ER57806/17, DA36976/14
Huf Baolong	TSSSG4G6b (tire pressure monitoring system control unit)	TRA ER7307/19, DA0086237/12
HUF	HUF13145 (locking system)	TRA ER08607/22, DA36976/14

Manufacturer	Model designation	Radio equipment approval number
HUF	HUF14632 (locking system)	TRA ER63716/18, DA36976/14
HUF	HUF4761 (locking system)	TRA ER55496/17, DA36976/14
HUF	HUF13145 (locking system)	TRA ER08607/22 DA36976/14
LEOPOLD KOSTAL	KK1 (locking system)	TRA ER62622/18, DA0105247/13

Manufacturer	Model designation	Radio equipment approval number
MARQUARDT	DC12A (locking system)	TRA ER53465/17, DA0018994/09
MARQUARDT	DC12B (locking system)	TRA ER0067828/11, DA0018994/09
MARQUARDT	DC12K (locking system)	TRA ER0067829/11, DA0018994/09
MARQUARDT	MS2 (locking system)	TRA ER52668/17, DA0018994/09

Manufacturer	Model designation	Radio equipment approval number
MARQUARDT	MS4 (locking system)	TRA ER71616/19, DA0018994/09
MARQUARDT	MS5 (locking system)	TRA ER80720/20, DA0018994/09
MARQUARDT	MK1 (locking system)	TRA ER64145/18, DA0018994/09
MARQUARDT	MK2 (locking system)	TRA ER64146/18, DA0018994/09
MARQUARDT	3350.38 (locking system)	TRA ER69280/19, 0018994/09

Manufacturer	Model designation	Radio equipment approval number
Schrader	AG5SP4 (tire pressure sensor)	TRA ER37156/15, DA0047074/10
Schrader	AG3PF4 (tire pressure sensor)	TRA ER70533/19, DA0047074/10
Schrader	BG3FP4 (tire pressure sensor)	TRA ER96175/21, DA0047074/10
Schrader	GG4T (tire pressure sensor)	TRA ER57985/17, DA0047074/10

Manufacturer	Model designation	Radio equipment approval number
Schrader	DG6W2D4 (tire pressure sensor)	TRA ER960528/18, DA0047074/10
Schrader	MC34MA4 (tire pressure monitoring system control unit)	TRA ER37066/15, DA0047074/10
Sennheiser	M3IETW2L (Earbud)	ER78231/20
Sennheiser	BTT100 (Bluetooth Audio Transmitter)	ER64728/18

Manufacturer	Model designation	Radio equipment approval number
Veoneer	77GHz MMRV1 (radar sensor)	TA RTTE: ER96352/21; 0020858/10
Veoneer	77V12BSM (radar sensor)	TA RTTE: ER72324/19; 0020858/10

Manufacturer	Model designation	Radio equipment approval number
Veoneer	77V12CRN (radar sensor)	TA RTTE: ER72323/19; 0020858/10

Manufacturer	Model designation	Radio equipment approval number
Veoneer	77V125CRN (radar sensor)	TA RTTE: ER95775/21; 0020858/10
WITTE-Velbert	SDHTAG3NFC (locking system)	TRA ER79695/20, DA0018994/09

United Kingdom

Regulatory radio identification

Manufacturer	Model designation
ADC	ARS4-A (radar sensor)
Continental Antenna	RKE213E1 (antenna amplifier)
Continental Antenna	RKE223E1GNS (antenna amplifier)
Continental Automotive	CMKG1 (locking system)
Continental Automotive	CMKG2 (locking system)
Continental Automotive	MARS Keyless (locking system)

Manufacturer	Model designation
Continental Automotive	UWBTRX1 (locking system)
Continental Automotive Technologies	NTG7Q MID LF2 (head unit)
Continental Automotive Technologies	NTG7Q HIGH LF2 (head unit)
Continental Automotive Technologies	NTG7Q PREMIUM LF2 (head unit)
HUF	HUF13145 (locking system)
Huf Baolong	TSSRE4A (tire pressure sensor)
HELLA	DM4 (locking system)

Manufacturer	Model designation
Hirschmann	920287A (locking system)
Hirschmann	920287B (locking system)
Hirschmann	920702A (locking system)
LEOPOLD KOSTAL	KK1 (locking system)
MARQUARDT	DC12B (locking system)
MARQUARDT	DC12K (locking system)
MARQUARDT	MK1 (locking system)
MARQUARDT	MK2 (locking system)

UK CA

Manufacturer	Model designation
MARQUARDT	MS2 (locking system)
MARQUARDT	MS4 (locking system)
MARQUARDT	MS5 (locking system)
MARQUARDT	3350.38 (locking system)
Schrader	AG5SP4 (tire pressure sensor)
Schrader	AG3PF4 (tire pressure sensor)
Schrader	BG3FP4 (tire pressure sensor)
Schrader	GG4T (tire pressure sensor)

UK CA

Manufacturer	Model designation
Schrader	DG6W2D4 (tire pressure sensor)
WITTE-Velbert	SDHTAG3NFC (locking system)

Further specific information

Charging unit for the wireless charging of mobile devices (WMI):

D-WMI2016A, D-WMI2017A, D-WMI2017B:

Restrictions or requirements in the United Kingdom: A minimum distance of 3.9 in (10 cm) must be maintained between all persons and the device at all times. The device must not be installed or operated together with other antennas or transmitters.

D-WMI2020A:

Restrictions or requirements in the United Kingdom: A minimum distance of 0 in (0 cm) must be maintained between all persons and the device at all times. The device must not be installed or operated together with other antennas or transmitters.

United States

Regulatory radio identification

Manufacturer	Model designation	Radio equipment approval number
Continental Automotive	CMKG2 (locking system)	FCC ID: KR5CMKG2
Continental Automotive Technologies	NTG7Q MID LF2 (head unit)	FCC ID: NTG7QMIDLF2
Continental Automotive Technologies	NTG7Q HIGH LF2 (head unit)	FCC ID: NTG7QHIGLF2

Manufacturer	Model designation	Radio equipment approval number
Continental Automotive Technologies	NTG7Q PREMIUM LF2 (head unit)	FCC ID: NTG7QPRELF2
Sennheiser	M3IETW2R (Earbud)	FCC ID: DMOM3IETW2R
Sennheiser	M3IETW2L (Earbud)	FCC ID: DMOM3IETW2L
Sennheiser	BTT100 (Bluetooth Audio Transmitter)	FCC ID: DMOBTT100

Information on installation clearances

Charging unit for the wireless charging of mobile devices (WMI):

This equipment complies with FCC and IC radiation exposure limits set forth for an uncontrolled environment. This equipment should be installed and operated with minimum distance of 0 cm (in contact) between the radiator and your body.This transmitter must not be co-located or operating in conjunction with any other antenna or transmitter. Cet équipement est conforme aux limites d'exposition aux rayonnements IC établies pour un Environnement non contrôlé. Cet équipement doit être installé et utilisé avec un minimum de 0 cm (in contact) de distance entre la source de rayonnement et votre corps. Ce transmetteur ne doit pas être place au même endroit ou utilise simultanément avec un autre transmetteur ou antenne.

Rear Seat Entertainment System:

This device complies with part 15 of the FCC Rules and Industry Canada license-exempt RSS standard(s). Operation is subject to the following two conditions: (1)This device may not cause harmful interference, and (2) this device must accept any interference received, including interference that may cause undesired operation.

Changes or modifications not expressly approved by the party responsible for compliance could void the user's authority to operate the equipment.

This device must be installed and used at a distance of at least 6 cm from the body.

This device complies with ISED Canada licence-exempt RSS standard(s). Operation is subject to the following two conditions: (1) this device may not cause interference, and (2) this device must accept any interference, including interference that may cause undesired operation of the device. Le présent appareil est conforme aux CNR d'Industrie Canada applicables aux appareils radio exempts de licence. L'exploitation est autorisée aux deux conditions suivantes : (1) l'appareil ne doit pas produire de brouillage, et (2) l'utilisateur de l'appareil doit accepter tout brouillage radioélectrique subi, même si le brouillage est susceptible d'en compromettre le fonctionnement.

This equipment complies with ISED radiation exposure limits established for an uncontrolled environment. This equipment must be installed and operated with a minimum distance of 5 cm between the radiation source and your body. Cet équipement est conforme aux limites d'exposition aux rayonnements ISED établies pour un environ-

nement non contrôlé. Cet équipement doit être installé et utilisé avec un minimum de 5 cm de distance entre la source de rayonnement et votre corps.

Radar sensors:

ARS4-C (ADC), ARS4-B (ADC), ARS4-A (ADC), FR5CPCCF (Bosch), MRR1REAR (Bosch), MRREVO14F (Bosch), LRR3 (Bosch), 77V12BSM (Veoneer), 77V12CRN (Veoneer), MMRV1 (Veoneer)

Radiofrequency radiation exposure Information:

This equipment complies with FCC radiation exposure limits set forth for an uncontrolled environment. This equipment should be installed and operated with minimum distance of 20 cm between the radiator and your body.

This transmitter must not be co-located or operating in conjunction with any other antenna or transmitter.

This equipment should be installed and operated with minimum distance of 20 cm between the radiator and your body. Cet équipement doit être installé et utilisé avec un minimum de 20 cm de distance entre la source de rayonnement et votre corps.

BT Audio Transmitter (BTT100):

This equipment complies with FCC and IC radiation exposure limits set forth for an uncontrolled environment. This equipment should be installed and operated with minimum distance of 9 cm between the radiator and your body.

This transmitter must not be co-located or operating in conjunction with any other antenna or transmitter.

Vietnam

Regulatory radio identification

Manufacturer	Model designation	Radio equipment approval number
ADC	ARS4-A (radar sensor)	Mercedes-Benz Vietnam Company Limited
ADC	ARS4-C (radar sensor)	Mercedes-Benz Vietnam Company Limited
Bosch	FR5CPCCF (radar sensor)	Mercedes-Benz Vietnam Company Limited

Manufacturer	Model designation	Radio equipment approval number
Bosch	MRR1Rear (radar sensor)	Mercedes-Benz Vietnam Company Limited
Bosch	MRRe14FCR (radar sensor)	Mercedes-Benz Vietnam Company Limited
Continental Antenna	RKE213E1 (antenna amplifier)	Suntech Vietnam Technology Company Limited C0274151118AF04A2

Manufacturer	Model designation	Radio equipment approval number
Continental Antenna	RKE223E1GNS (antenna amplifier)	Suntech Vietnam Technology Company Limited B1522011121AF04A3
Continental Automotive	CMKG1 (locking system)	Suntech Vietnam Technology Company Limited C0001070120AF04A2

Manufacturer	Model designation	Radio equipment approval number
Continental Automotive	CMKG2 (locking system)	Mercedes-Benz Vietnam Company B00172019
Continental Automotive	MARS Keyless (locking system)	Mercedes-Benz Vietnam Company Limited B0748240419AF04A2

Manufacturer	Model designation	Radio equipment approval number
HELLA	DM4 (locking system)	Mercedes-Benz Vietnam Company Limited CO204030321AF04A3
Hirschmann	920702A (locking system)	Mercedes-Benz Vietnam Company Limited B0424070422AF04A3
Huf Baolong	TSSRE4A (tire pressure sensor)	C0112200717AF04A2

Manufacturer	Model designation	Radio equipment approval number
HUF	HUF13145 (tire pressure sensor)	C1071050922AF04A3
LEOPOLD KOSTAL	KK1 (locking system)	Mercedes-Benz Vietnam Company Limited C0313140421AF0403
MARQUARDT	DC12A (locking system)	Suntech Vietnam Technology Company Limited C0208030321AF04A3

Manufacturer	Model designation	Radio equipment approval number
MARQUARDT	DC12B (locking system)	Suntech Vietnam Technology Company Limited C0076210121AF04A3
MARQUARDT	DC12K (locking system)	Suntech Vietnam Technology Company Limited C0077210121AF04A3

Manufacturer	Model designation	Radio equipment approval number
MARQUARDT	MS2 (locking system)	Suntech Vietnam Technology Company Limited C007521012 1AF04A3
MARQUARDT	MS4 (locking system)	Suntech Vietnam Technology Company Limited C091311082 1AF04A3

Manufacturer	Model designation	Radio equipment approval number
MARQUARDT	MS5 (locking system)	Suntech Vietnam Technology Company Limited C014114052 0AF04A2
MARQUARDT	MK1 (locking system)	Suntech Vietnam Technology Company Limited C004915012 1AF04A3

Manufacturer	Model designation	Radio equipment approval number
MARQUARDT	MK2 (locking system)	Suntech Vietnam Technology Company Limited C005015012 1AF04A3
MARQUARDT	3350.38 (locking system)	Suntech Vietnam Technology Company Limited C013103022 1AF04A3

Manufacturer	Model designation	Radio equipment approval number
Schrader	AG5SP4 (tire pressure sensor)	Suntech Vietnam Technology Company Limited C0002050119AF042A
Schrader	AG3PF4 (tire pressure sensor)	Suntech Vietnam Technology Company Limited C0120220519AF04A2

Manufacturer	Model designation	Radio equipment approval number
Schrader	GG4T (tire pressure sensor)	Suntech Vietnam Technology Company Limited C0170191017AF04A2
Schrader	DG6W2D4 (tire pressure sensor)	Suntech Vietnam Technology Company Limited C0078070518AF04A2

Manufacturer	Model designation	Radio equipment approval number
Veoneer	77GHz MMRV1 (radar sensor)	Mercedes-Benz Vietnam Company Limited
Veoneer	77V12BSM (radar sensor)	Mercedes-Benz Vietnam Company Limited
Veoneer	77V12CRN (radar sensor)	Mercedes-Benz Vietnam Company Limited

Manufacturer	Model designation	Radio equipment approval number
Veoneer	77V125CRN (radar sensor)	Mercedes-Benz Vietnam Company Limited
WITTE-Velbert	SDHTAG3NFC (locking system)	Mercedes-Benz Vietnam Company Limited A084713082 0AF04A3

Information about the specific absorption rate (SAR)

Information about the specific absorption rate
The values have been determined and tested in accordance with the Décret n° 2019-1186 guideline regarding the indication of the specific absorption rate (SAR) of wireless vehicle components.

Further information and updates are available at the following web address:

https://regulatoryradioinformation.corpinter.net/us

Information about the specific absorption rate

Vehicle components	SAR value in W/kg	Applicable limit value
Compensator ECE DE003 & ECE DE004	< 0.2 W/kg	2 W/kg
DAI RSE	1.8 W/kg	2 W/kg
D-WMI2020A	0.018 W/kg	4 W/kg
HERMES communication module	< 0.4 W/kg	2 W/kg
RAMSES communication module	0.036 W/kg	2 W/kg
NRCS2P	0.003 W/kg	2 W/kg
NTG6	0.199 W/kg	4 W/kg
NTG7	0.08 W/kg	2 W/kg
NTG7RSU	0.07 W/kg	2 W/kg
Gen20x.i2 LS3+	2,2 W/kg	4 W/kg
Gen20x.i2 LS4+	2,5 W/kg	4 W/kg
Tablet PC SM-T230NZ	0.7 W/kg	4 W/kg
Radio data transmission telephone system	0.24 W/kg	2 W/kg

Vehicle identification plate, VIN and engine number overview

Vehicle identification plate

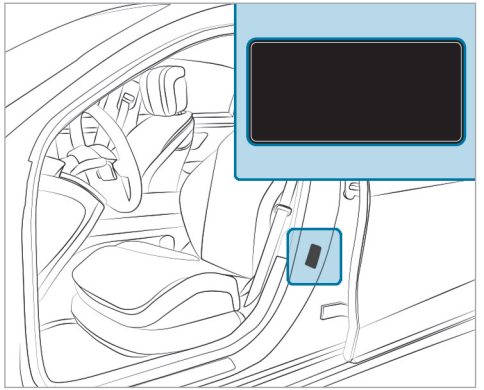

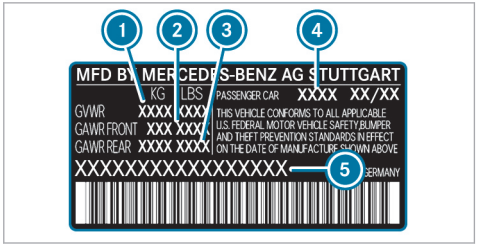

Vehicle identification plate (USA only)

1. Gross vehicle weight rating
2. Maximum permissible front axle load
3. Maximum permissible rear axle load
4. Paint code
5. VIN (vehicle identification number)

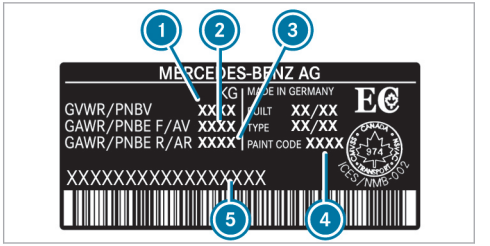

Vehicle identification plate (Canada only)

1. Gross vehicle weight rating
2. Maximum permissible front axle load
3. Maximum permissible rear axle load
4. Paint code
5. VIN (vehicle identification number)

The gross vehicle weight rating comprises the vehicle weight, all vehicle occupants, the fuel and the load. The gross axle weight rating is the maximum weight that can be carried on one axle (front or rear axle).

Do not exceed the gross vehicle weight rating or the gross axle weight rating for the front or rear axle.

VIN below the right front seat

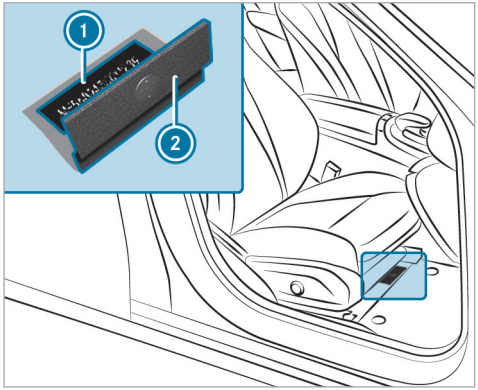

1. Imprinted VIN (vehicle identification number)
2. Floor covering

Additional plates

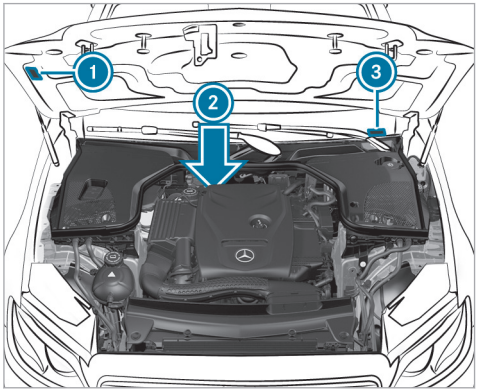

1. Plate with information regarding emissions testing, including confirmation of emissions guidelines at the U.S. federal level and for California
2. Engine number stamped into the crankcase
3. VIN (vehicle identification number) as a label at the lower edge of the windshield

Operating fluids

Notes on operating fluids

WARNING Risk of injury due to harmful operating fluids

Operating fluids can be toxic.

- When using, storing and disposing of operating fluids, observe the imprints on the respective original containers.
- Always keep operating fluids in the sealed original container.
- Always keep children away from operating fluids.

ENVIRONMENTAL NOTE Pollution of the environment due to irresponsible disposal of operating fluids

Incorrect disposal of operating fluids can cause considerable damage to the environment.

- Dispose of operating fluids in an environmentally responsible manner.

Operating fluids include the following:

- Fuels
- Lubricants
- Coolant
- Brake fluid
- Windshield washer fluid
- Climate control system refrigerant

Only use products approved by Mercedes-Benz. Damage caused by the use of products that have not been approved is not covered by the Mercedes-Benz warranty or goodwill gestures.

The operating fluids approved by Mercedes-Benz can be identified by the following inscriptions on the container:

- MB-Freigabe (e.g. MB-Freigabe 229.51)
- MB-Approval (e.g. MB-Approval 229.51)

Further information on approved operating fluids:

- in the Mercedes-Benz Specifications for Operating Fluids by entering the designation
  - At https://operatingfluids.mercedes-benz.com
- At a qualified specialist workshop

WARNING Risk of fire or explosion from fuel

Fuels are highly flammable.

▶ Fire, open flames, smoking and creating sparks must be avoided.

▶ Before and during refueling, switch off the vehicle and, if installed, the stationary heater.

WARNING Risk of injury from fuels

Fuels are poisonous and hazardous to your health.

▶ Do not swallow fuel or let it come into contact with skin, eyes or clothing.

▶ Do not inhale fuel vapor.

▶ Keep children away from fuel.

▶ Keep doors and windows closed during the refueling process.

If you or other people come into contact with fuel, observe the following:

▶ Immediately rinse fuel off your skin with soap and water.

▶ If fuel comes into contact with your eyes, immediately rinse them thoroughly with clean water. Seek medical attention immediately.

▶ If you swallow fuel, seek medical attention immediately. Do not induce vomiting.

▶ Change immediately out of clothing that has come into contact with fuel.

Flexible-fuel vehicles can be refueled with the following fuel types:

- premium-grade unleaded gasoline
- E85 fuel
- a mixture of E85 fuel and premium-grade unleaded gasoline

Flexible-fuel vehicles can be identified by the **Ethanol up to E85** sticker on the inside of the fuel filler flap.

Depending on the country, the fuels you can use in your vehicle may differ from the information in the Operator's Manual. The fuels that have been approved for your vehicle can be found on the instruction label on the inside of the fuel filler flap.

Fuel

Information on fuel quality for vehicles with gasoline engine

Observe the notes on operating fluids (→ page 757).

! **NOTE** Damage caused by the wrong type of fuel

Even small amounts of the wrong type of fuel can result in damage to the fuel system, the engine and the emission control system.

▶ Refuel only with low-sulfur gasoline.

This fuel may contain up to 10 %- ethanol by volume. Your vehicle is suitable for use with E10- fuel.

Never refuel with any of the following fuels:

- Diesel
- Gasoline with more than 10 %- ethanol by volume, e.g. E15, E85, E100
- Gasoline with more than 3% methanol by volume-, e.g. M15, M30, M85, M100
- Gasoline with metallic additives

If you accidentally did fill up with the wrong fuel:

▶ Do not start the vehicle.

▶ Consult a qualified specialist workshop.

If the available fuel is not sufficiently low in sulfur, it may produce unpleasant odors.

Refuel only with fuel that has at least the octane number specified on the information label inside the fuel filler flap (→ page 23).

Never refuel using gasoline with an even lower RON.

! **NOTE** Premature engine wear through unleaded regular gasoline

Impairment of the longevity and performance of the engine.

If unleaded premium grade gasoline is unavailable and you have to refuel using unleaded regular gasoline:

▶ Only fill the fuel tank to half full with unleaded regular gasoline and refill as soon as possible with unleaded premium grade gasoline.

▶ Do not drive at the maximum design speed.

▶ Avoid sudden acceleration and engine speeds over 3000 rpm.

Further information on fuel is available in the following locations:

- At a gas station
- At a qualified specialist workshop
- On the https://www.mbusa.com (USA only)

Information on fuel quality for Mercedes-AMG vehicles

Observe the notes on operating fluids (→ page 757).

NOTE Damage caused by the wrong type of fuel

Even small amounts of the wrong type of fuel can result in damage to the fuel system, the engine and the emission control system.

▶ Refuel only with low-sulfur gasoline.

This fuel may contain up to 10 %- ethanol by volume. Your vehicle is suitable for use with E10- fuel.

Never refuel with any of the following fuels:

- Diesel
- Gasoline with more than 10 %- ethanol by volume, e.g. E15, E85, E100
- Gasoline with more than 3% methanol by volume-, e.g. M15, M30, M85, M100
- Gasoline with metallic additives

If you accidentally did fill up with the wrong fuel:

▶ Do not start the vehicle.

▶ Consult a qualified specialist workshop.

If the available fuel is not sufficiently low in sulfur, it may produce unpleasant odors.

Refuel only with premium-grade unleaded gasoline that has an octane number of at least 91 AKI/ 95 RON.

As a temporary measure, if the recommended fuel is not available, you may also use regular unleaded gasoline. When doing this, note the octane number on the information label inside the fuel filler flap (→ page 23). Filling up with regular unleaded gasoline may reduce engine output and increase fuel consumption.

Never refuel using gasoline with an even lower RON.

NOTE Premature engine wear through unleaded regular gasoline

Impairment of the longevity and performance of the engine.

If unleaded premium grade gasoline is unavailable and you have to refuel using unleaded regular gasoline:

▶ Only fill the fuel tank to half full with unleaded regular gasoline and refill as soon as possible with unleaded premium grade gasoline.

▶ Do not drive at the maximum design speed.

▶ Avoid sudden acceleration and engine speeds over 3000 rpm.

Further information on fuel is available in the following locations:

- At a gas station
- At a qualified specialist workshop
- **USA only:** on the https://www.mbusa.com

Information on additives in gasoline (vehicles with gasoline engine)

Observe the notes on operating fluids (→ page 757).

! **NOTE** Damage from use of unsuitable additives

Even small amounts of the wrong additive may lead to malfunctions occurring.

▶ Only add cleaning additives recommended by Mercedes-Benz to the fuel.

Mercedes-Benz recommends that you use brand-name fuels with additives.

In some countries, the fuel available may not have sufficient additives. Deposits could build up in the fuel injection system as a result. In this case, in consultation with a qualified specialist workshop (e.g. an authorized Mercedes-Benz Service Center), mix the fuel with the cleaning additive recommended by Mercedes-Benz. Observe the notes and mixing ratios indicated on the tank.

Tank content and fuel reserve

The total capacity of the fuel tank may vary depending on the vehicle equipment.

Total fuel tank capacity

Model	
All models	16.4 gal (62.0 liters)

Fuel tank reserve

Model	
All models	1.8 gal (7.0 liters)

Tank content and fuel reserve (Mercedes-AMG vehicles)

The total capacity of the fuel tank may vary depending on the vehicle equipment.

Not for Mercedes-AMG E PERFORMANCE:

Total fuel tank capacity

Model	
Mercedes-AMG GLC 43 4MATIC	16.4 gal (62.0 liters)

Fuel tank reserve

Model	
Mercedes-AMG GLC 43 4MATIC	2.6 gal (10.0 liters)

Mercedes-AMG E PERFORMANCE:

Total fuel tank capacity (Mercedes-AMG E PERFORMANCE)

Model	
Mercedes-AMG GLC 63 S E PERFORMANCE	17.2 gal (65.0 liters)

Fuel tank reserve (Mercedes-AMG E PERFORMANCE)

Model	
Mercedes-AMG GLC 63 S E PERFORMANCE	2.6 gal (10.0 liters)

Engine oil

Notes on engine oil

Observe the notes on operating fluids (→ page 757).

! NOTE Engine damage caused by an incorrect oil filter, incorrect oil or additives

- ▶ Do not use engine oils or oil filters other than those which meet the specifications necessary for the prescribed service intervals.
- ▶ Do not alter the engine oil or oil filter in order to achieve longer change intervals than prescribed.
- ▶ Do not use additives.
- ▶ Have the engine oil changed after the prescribed intervals.

Mercedes-Benz recommends having the oil changed at a qualified specialist workshop.

Only use engine oils approved for your vehicle by Mercedes-Benz.

Engine oil quality and filling quantity

Engine oil specification

Model	MB-Freigabe or MB-Approval
All models	229.71, 229.72*

* Recommended for the lowest possible fuel consumption (lowest SAE viscosity class in each case; observe possible restrictions of the approved SAE viscosity classes).

Use only engine oils of viscosity class SAE 0W-20.

The following values refer to an oil change, including the oil filter.

Engine oil filling quantity

Model	Quantity
All models	6.3 US qt (6.0 liters)

Engine oil quality and filling quantity (Mercedes-AMG vehicles)

Not for Mercedes-AMG E PERFORMANCE:

Engine oil specification

Model	MB-Freigabe or MB-Approval
Mercedes-AMG GLC 43 4MATIC	229.71

Mercedes-AMG E PERFORMANCE:

Engine oil specification (Mercedes-AMG E PERFORMANCE)

Model	MB-Freigabe or MB-Approval
Mercedes-AMG GLC 63 S E PERFORMANCE	229.71

Use only engine oils of viscosity class SAE 0W-20.

To achieve the lowest possible fuel consumption, it is recommended to use the engine oil specifications marked in the table with the lowest SAE viscosity class in each case. Observe possible restrictions of the approved SAE viscosity classes.

Not for Mercedes-AMG E PERFORMANCE:

Engine oil filling quantity

Model	Quantity
Mercedes-AMG GLC 43 4MATIC	6.3 US qt (6.0 liters)

Mercedes-AMG E PERFORMANCE:

Engine oil filling quantity (Mercedes-AMG E PERFORMANCE)

Model	Quantity
Mercedes-AMG GLC 63 S E PERFORMANCE	6.3 US qt (6.0 liters)

The specified filling quantity refers to an oil change with the oil filter.

Notes on brake fluid

Please observe the notes on operating fluids (→ page 757).

WARNING Risk of an accident due to vapor pockets forming in the brake system

The brake fluid constantly absorbs moisture from the air. This lowers the boiling point of the brake fluid. If the boiling point is too low, vapor pockets may form in the brake system when the brakes are applied hard.

This causes the braking effect to be impaired.

▶ Have the brake fluid renewed at the specified intervals.

Have the brake fluid regularly replaced at a qualified specialist workshop.
Only use a brake fluid according to MB-Freigabe or MB-Approval 331.0 approved by Mercedes-Benz.

Coolant

Notes on coolant

Observe the notes on operating fluids (→ page 757).

WARNING - Risk of fire and injury from antifreeze

If antifreeze comes into contact with hot component parts in the engine compartment, it may ignite.

- ▶ Allow the engine to cool down before adding antifreeze.
- ▶ Make sure that no antifreeze spills out next to the filler opening.
- ▶ Thoroughly clean off any antifreeze from component parts before starting the vehicle.

NOTE Damage caused by incorrect coolant

- ▶ Only use coolant that has been premixed with the required antifreeze protection.

Information on coolant is available at the following locations:

- In the Mercedes-Benz Specification for Operating Fluids 320.1
  - At https://operatingfluids.mercedes-benz.com
- At a qualified specialist workshop

NOTE Overheating at high outside temperatures

If an inappropriate coolant is used, the cooling system is not sufficiently protected against overheating and corrosion at high outside temperatures.

- ▶ Only use coolant approved for Mercedes-Benz.
- ▶ Observe the instructions in the Mercedes-Benz Specifications for Operating Fluids 320.1.

Have the coolant regularly replaced at a qualified specialist workshop.

Proportion of antifreeze concentrate in the cooling system:

- A minimum of 50% (antifreeze protection down to about -35°F (-37°C))
- A maximum of 55% (antifreeze protection down to -49°F (-45°C))

Coolant filling capacity

Coolant (engine)

Model	Capacity
All models	14.8 US qt (14.0 liters)

Coolant filling quantity (Mercedes-AMG vehicles)

Not for Mercedes-AMG E Performance:

Coolant

Model	Quantity
Mercedes-AMG GLC 43 4MATIC	13.1 US qt (12.4 liters)

Mercedes-AMG E PERFORMANCE:

Missing values were not available by the editorial deadline.

Coolant (Mercedes-AMG E PERFORMANCE)

Model	Quantity
Mercedes-AMG GLC 63 S E PERFORMANCE	

Notes on windshield washer fluid

Observe the notes on operating fluids (→ page 757).

WARNING - Risk of fire and injury from windshield washer concentrate

Windshield washer concentrate is highly flammable. It could ignite if it comes into contact with hot engine component parts or the exhaust system.

▶ Make sure that no windshield washer concentrate spills out next to the filler opening.

NOTE Damage to the exterior lighting due to unsuitable windshield washer fluid

Unsuitable windshield washer fluid may damage the plastic surface of the exterior lighting.

▶ Only use windshield washer fluid which is also suitable for use on plastic surfaces, e.g. MB SummerFit or MB WinterFit.

NOTE Blocked spray nozzles caused by mixing windshield washer fluids

▶ Do not mix MB SummerFit and MB WinterFit with other windshield washer fluids.

Do not use distilled or de-ionised water. Otherwise, the fill level sensor may be triggered erroneously.

Recommended windshield washer fluid:

- Above freezing point: e.g. MB SummerFit
- Below freezing point: e.g. MB WinterFit

For the correct mixing ratio, refer to the information on the antifreeze container.

Mix washing water with windshield washer fluid all year round.

Refrigerant

Notes on refrigerant

Observe the notes on operating fluids (→ page 757).

NOTE Damage due to incorrect refrigerant

If a non-approved refrigerant is used, the climate control system may be damaged.

▶ Use only R-1234yf refrigerant.

NOTE Damage to the climate control system due to incorrect refrigerant compressor oil

▶ Only use refrigerant compressor oil that has been approved by Mercedes-Benz.

▶ Do not mix the approved refrigerant compressor oil with a different refrigerant compressor oil.

Work on the climate control system may be carried out only at a qualified specialist workshop. All applicable regulations, as well as SAE standard J639, must be adhered to.

The information label on the climate control system for the refrigerant type and the refrigerant compressor oil (PAG oil) is located on the inside of the hood.

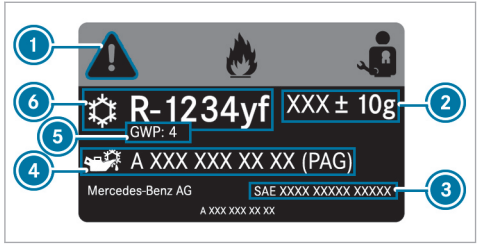

Information label

1. Hazard and service warning symbols
2. Refrigerant filling capacity
3. Applicable standards
4. PAG oil part number
5. GWP (global warming potential) of the refrigerant used
6. Refrigerant type

Symbols 1 indicate the following:

- Possible dangers
- Maintenance work to be carried out at a qualified specialist workshop

Filling capacity for refrigerant and PAG oil

Refrigerant filling capacity

Model	
All models	21.2 ± 0.4 oz (600 ± 10 g)

Filling capacity for PAG oil

Model	
All models	2.8 ± 0.4 oz (80 ± 10 g)

Filling quantity for refrigerant and PAG oil (Mercedes-AMG vehicles)

Missing values were not available by the editorial deadline.

Refrigerant filling capacity

Model	
Mercedes-AMG GLC 43 4MATIC	

Filling quantity for PAG oil

Model	
Mercedes-AMG GLC 43 4MATIC	

Mercedes-AMG E PERFORMANCE:

Refrigerant filling quantity (Mercedes-AMG E PERFORMANCE)

Model	
Mercedes-AMG GLC 63 S E PERFORMANCE	

PAG oil filling quantity (Mercedes-AMG E PERFORMANCE)

Model	
Mercedes-AMG GLC 63 S E PERFORMANCE	

Vehicle data

Vehicle dimensions

The heights specified may vary as a result of the following factors:

- Tires
- Load
- Condition of the suspension
- Special equipment

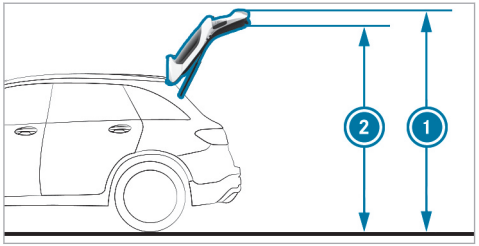

1 Height when open
2 Headroom

Height when open and headroom

Model	1 Height when open	2 Headroom
All models	85.4 in (2168 mm)	78.3 in (1989 mm)

F254 0138 13

Vehicle dimensions

All models	
Vehicle length	185.7 in (4716 mm)
Vehicle width including exterior mirrors	81.7 in (2075 mm)
Vehicle height	65.3 in (1659 mm)
Wheelbase	113.7 in (2888 mm)
Maximum ground clearance	8.2 in (208 mm)
Minimum ground clearance	8.2 in (208 mm)
Turning radius	38.7 ft (11.8 m)

Vehicle dimensions (Mercedes-AMG vehicles)

The heights specified may vary as a result of the following factors:

- Tires
- Load

- Condition of the suspension
- Special equipment

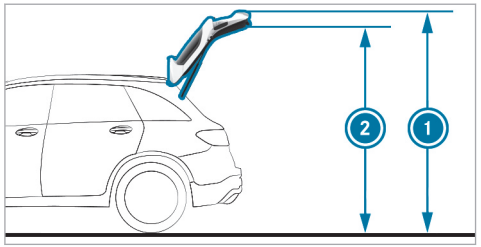

1 Height when open
2 Standing headroom

Not for Mercedes-AMG E PERFORMANCE:

Height when open and standing headroom

Model	1 Height when open	2 Standing headroom
Mercedes-AMG GLC 43 4MATIC	84.4 in (2145 mm)	76.9 in (1954 mm)

Vehicle dimensions

Mercedes-AMG GLC 43 4MATIC	
Vehicle length	187.0 in (4749 mm)
Vehicle width including exterior mirrors	81.7 in (2076 mm)
Vehicle height	64.4 in (1635 mm)
Wheelbase	113.7 in (2888 mm)
Turning radius	42.3 ft (12.9 m)
Maximum ground clearance	6.2 in (157 mm)
Minimum ground clearance	5.9 in (151 mm)

Mercedes-AMG E PERFORMANCE:

Height when open and headroom (Mercedes-AMG E PERFORMANCE)

Model	1 Height when open	2 Standing headroom
Mercedes-AMG GLC 63 S E PERFORMANCE	84.3 in (2141 mm)	76.8 in (1951 mm)

Vehicle dimensions (Mercedes-AMG E PERFORMANCE)

Mercedes-AMG GLC 63 S E PERFORMANCE	
Vehicle length	187.0 in (4749 mm)
Vehicle width including exterior mirrors	81.7 in (2076 mm)
Vehicle height	64.4 in (1635 mm)
Wheelbase	113.7 in (2888 mm)
Turning radius	42.3 ft (12.9 m)

Mercedes-AMG GLC 63 S E PERFORMANCE	
Maximum ground clearance	5.7 in (144 mm)
Minimum ground clearance	5.6 in (143 mm)

Weights and loads

Bear in mind that items of special equipment increase the curb weight and reduce the payload. Vehicle-specific weight information can be found on the vehicle identification plate.

Weights and loads (Mercedes-AMG vehicles)

Bear in mind that items of special equipment increase the curb weight and reduce the payload. Vehicle-specific weight information can be found on the vehicle identification plate.

Off-road driving

Also observe the notes on driving off-road, driving in mountainous terrain and fording (→ page 240).

Fording

! NOTE Damage caused by water when fording

Water can enter the engine compartment and vehicle interior in the following cases:

- The maximum permissible fording depth is exceeded when traveling through standing water.
- A bow wave forms during fording.
- Water accumulates when fording.

▶ Do not exceed the maximum permissible fording depth.

▶ Drive slowly through water.

▶ When driving through flowing water, be aware that the permissible fording depth is lower due to the accumulation of water.

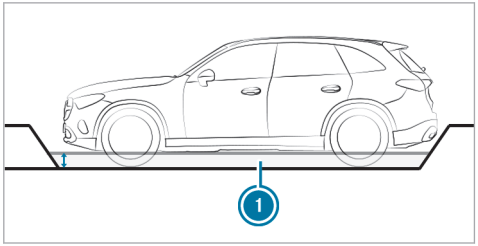

The maximum permissible fording depth (1) with roadworthy load is 11.8 in (30 cm).

Ready-to-drive load means:

- Full fuel tank
- All fluids are topped up
- With driver

Notes on the angle of approach/departure

The specified values are maximum values for vehicles that are in ready-to-drive condition.

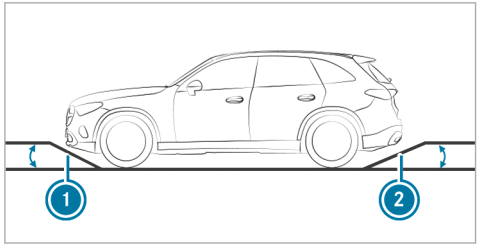

Angle of approach/departure

Model	1 Front	2 Rear
All models	22.6°	23.1°

Maximum gradeability

The vehicle's gradeability depends on the weight distribution in the vehicle, the terrain conditions and the road surface conditions.

The specified value applies when:

- the vehicle is ready to drive.
- The surface conditions of the ground are good, enabling good traction.

A gradeability of 100 % corresponds to an incline of 45°.

Observe the notes on driving in mountainous terrain (→ page 240).

Gradeability

Model	Maximum gradeability
All models	70%

Off-road driving (Mercedes-AMG models)

Observe the notes on driving off-road, driving in mountainous terrain and fording (→ page 240).

Fording

! NOTE Damage caused by water when fording

Water can enter the engine compartment and vehicle interior in the following cases:

- The maximum permissible fording depth is exceeded when traveling through standing water.
- A bow wave forms during fording.
- Water accumulates when fording.

▶ Do not exceed the maximum permissible fording depth.

▶ Drive slowly through water.

▶ When driving through flowing water, be aware that the permissible fording depth is lower due to the accumulation of water.

The specified value indicates the maximum permissible fording depth for vehicles that are ready to drive and for slow driving through standing water.

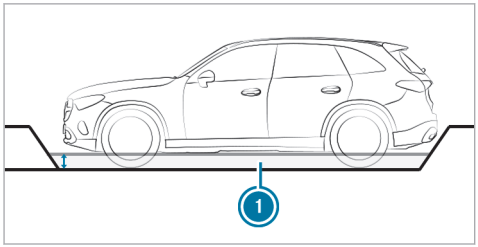

Not for Mercedes-AMG E PERFORMANCE:

Fording depth

Model	1 Fording depth
Mercedes-AMG GLC 43 4MATIC	9.8 in (25 cm)

Mercedes-AMG E PERFORMANCE:

Fording depth

Model	1 Fording depth
Mercedes-AMG GLC 63 S E PERFORMANCE	9.8 in (25 cm)

Notes on the angle of approach/departure

The specified values are maximum values for vehicles that are ready to drive.

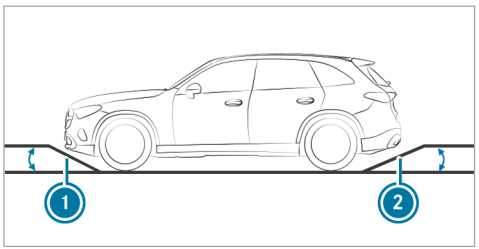

Not for Mercedes-AMG E PERFORMANCE:

Angle of approach/departure

Model	1 Front	2 Rear
Mercedes-AMG GLC 43 4MATIC	14.2°	18.5°

Mercedes-AMG E PERFORMANCE:

Angle of approach/departure (Mercedes-AMG E PERFORMANCE)

Model	1 Front	2 Rear
Mercedes-AMG GLC 63 S E PERFORMANCE	14.5°	18.4°

Maximum gradeability

The vehicle's gradeability depends on the weight distribution in the vehicle, the terrain conditions and the road surface conditions.

The specified value applies when:

- the vehicle is ready to drive.

- the road surface conditions and thus the traction are good.

A gradeability of 100 % corresponds to an incline of 45°.

Observe the notes on driving in mountainous terrain(→ page 240).

Missing values were not available at the time of going to press.

Not for Mercedes-AMG E PERFORMANCE:

Gradeability

Model	Maximum gradeability
Mercedes-AMG GLC 43 4MATIC	

Mercedes-AMG E PERFORMANCE:

Gradeability

Model	Maximum gradeability
Mercedes-AMG GLC 63 S E PERFORMANCE	

High-voltage battery (Mercedes-AMG E PERFORMANCE)

You can find information on the range in all-electric mode on the driver display(→ page 290).

Missing values were not available by the editorial deadline.

Energy content and charging times

Mercedes-AMG GLC 63 S E PERFORMANCE	
Type	Lithium-ion
Maximum energy content	6.1 kWh
Range in all-electric mode	
Charging time – mode 2 The charging capacity was not available by the editorial deadline.	

– Mode 2 charging time applies to AC charging from 25 % to 100 % of the usable energy content.

The time taken to charge the battery depends on the state of charge of the battery, the ambient temperature and the charging capacity of the battery. The charging power, in turn, depends on the supply voltage, the current and the type of power supply.

The nominal voltage range for your vehicle can be found on the information label in the socket flap.

Trailer hitch

General notes on the trailer hitch

Modifications to the cooling system may be necessary, depending on the vehicle model. The retrofitting of a trailer hitch is permissible only if a towing capacity is specified in your vehicle documents.

Further information can be obtained at a qualified specialist workshop.

Observe the information and notes on the trailer hitch (→ page 387).

Mounting dimensions

Missing values were not available by the editorial deadline.

Overhang dimension length

Model	Overhang dimension
All models	

Trailer load

ⓘ The tongue weight is not included in the trailer load.
The values for the **trailer load, braked** apply with a minimum start-off gradeability of 12%.

Missing values were not available at the time of going to press.

Trailer load, braked

Model	
All models	

Trailer load, unbraked

Model	
All models	

Trailer load (Mercedes-AMG vehicles)

ⓘ The tongue weight is not included in the trailer load.
The values for the **trailer load, braked** apply with a minimum start-off gradeability of 12 %.

Missing values were not available by the editorial deadline.

Not for Mercedes-AMG E PERFORMANCE:

Trailer load, braked

Model	
Mercedes-AMG GLC 43 4MATIC	

Trailer load, unbraked

Model	
Mercedes-AMG GLC 43 4MATIC	

Mercedes-AMG E PERFORMANCE:

Trailer load, braked (Mercedes-AMG E PERFORMANCE)

Model	
Mercedes-AMG GLC 63 S E PERFORMANCE	

Trailer load, unbraked (Mercedes-AMG E PERFORMANCE)

Model	
Mercedes-AMG GLC 63 S E PERFORMANCE	

Maximum tongue weight- and load capacity

NOTE Damage caused by the trailer coming loose

If the tongue weight used is too low, the trailer may come loose.

- The tongue weight must not be below 110.2 lbs (50 kg).
- Use a tongue weight that is as close as possible to the maximum permissible tongue weight.

NOTE Damage caused by the bicycle rack coming loose

When using a bicycle rack, both the maximal tongue weight and the maximal load capacity should be observed.

- Do not exceed the permissible load capacity.

Missing values were not available at the time of going to press.

Tongue weight

Model	Maximum tongue weight
All models	

Load capacity

Model	Maximum load capacity
All models	

Maximum tongue- weight and load capacity (Mercedes-AMG vehicles)

NOTE Damage caused by the trailer coming loose

If the tongue weight used is too low, the trailer may come loose.

- The tongue weight must not be below 110.2 lbs (50 kg).
- Use a tongue weight that is as close as possible to the maximum permissible tongue weight.

NOTE Damage caused by the bicycle rack coming loose

When using a bicycle rack, both the maximal tongue weight and the maximal load capacity should be observed.

- Do not exceed the permissible load capacity.

Observe the additional notes on load capacity in the vehicle Operator's Manual.

Missing values were not available by the editorial deadline.

Not for Mercedes-AMG E PERFORMANCE:

Tongue weight

Model	Maximum tongue weight
Mercedes-AMG GLC 43 4MATIC	

Load capacity

Model	Maximum load capacity
Mercedes-AMG GLC 43 4MATIC	

Mercedes-AMG E PERFORMANCE:

Tongue weight (Mercedes-AMG E PERFORMANCE)

Model	Maximum tongue weight
Mercedes-AMG GLC 63 S E PERFORMANCE	

Load capacity (Mercedes-AMG E PERFORMANCE)

Model	Maximum load capacity
Mercedes-AMG GLC 63 S E PERFORMANCE	

Permissible rear axle load (trailer operation)

Missing values were not available at the time of going to press.

Not for plug-in hybrid:

Trailer operation axle load

Model	Axle load
All models	

Gross axle weight rating, rear axle (Mercedes-AMG vehicles)

Missing values were not available by the editorial deadline.

Not for Mercedes-AMG E PERFORMANCE:

Trailer operation axle load

Model	Axle load
Mercedes-AMG GLC 43 4MATIC	

Mercedes-AMG E PERFORMANCE:

Axle load in trailer operation (Mercedes-AMG E PERFORMANCE)

Model	Axle load
Mercedes-AMG GLC 63 S E PERFORM-ANCE	

Display messages

Introduction

Information about display messages

Display messages appear on the driver display.

Display messages with graphical symbols are simplified in the Operator's Manual and may differ from the symbols on the driver display. The driver display shows high-priority display messages in red. Certain display messages will be accompanied by a warning tone.

Please act in accordance with the display messages and follow the additional notes in the Operator's Manual.

For some display messages, symbols will also be shown:

- ⓘ Further information
- × Hide display message

You can select the respective symbol by swiping left or right on the left-hand Touch Control. Press ⓘ to display further information on the central display. Press × to hide the display message.

You can hide display messages to be acknowledged by pressing the back button ↩ or with the left-hand Touch Control. The display messages will then be stored in the message memory.

Rectify the cause of a display message as quickly as possible.

High-priority display messages cannot be hidden. The driver display will show these display messages continuously until the cause of the display message has been rectified.

Calling up saved display messages

Driver's display:

→ Service

The Message Memory: XXmessage appears on the driver's display.

- ▶ Scroll through the display messages by swiping upwards or downwards on the left-hand Touch Control.
- ▶ **To exit the display:** press the ↩ back button.

Occupant safety

Display messages	Possible causes/consequences and ▶ Solutions
Restraint System Malfunction Service Required	* The restraint system is malfunctioning (→ page 96). **⚠ WARNING** Risk of injury due to malfunctions in the restraint system Components in the restraint system may be activated unintentionally or not deploy as planned in an accident. ▶ Have the restraint system checked and repaired immediately at a qualified specialist workshop. **Plug-in hybrid:** **⚠ DANGER** Risk of death due to the restraint system malfunctioning Components in the restraint system may be activated unintentionally or not deploy as intended in an accident. In the event of an accident, the high-voltage on-board electrical system may not be deactivated as intended. You may receive an electric shock if you touch the damaged components of the high-voltage on-board electrical system. ▶ Have the restraint system checked and repaired immediately at a qualified specialist workshop. ▶ After an accident, switch off the vehicle immediately. Recognition of a restraint system malfunction: • the restraint system warning lamp does not light up when the vehicle is switched on • the restraint system warning lamp lights up continuously or repeatedly during a journey

Display messages	Possible causes/consequences and ▶ Solutions
	▶ Consult a qualified specialist workshop immediately.
 Front Left Malfunction Service Required	* The restraint system is malfunctioning (→ page 96). **⚠ WARNING** Risk of injury due to malfunctions in the restraint system Components in the restraint system may be activated unintentionally or not deploy as planned in an accident. ▶ Have the restraint system checked and repaired immediately at a qualified specialist workshop. Plug-in hybrid: **⚠ DANGER** Risk of death due to the restraint system malfunctioning Components in the restraint system may be activated unintentionally or not deploy as intended in an accident. In the event of an accident, the high-voltage on-board electrical system may not be deactivated as intended. You may receive an electric shock if you touch the damaged components of the high-voltage on-board electrical system. ▶ Have the restraint system checked and repaired immediately at a qualified specialist workshop. ▶ After an accident, switch off the vehicle immediately. Recognition of a restraint system malfunction: • the restraint system warning lamp does not light up when the vehicle is switched on • the restraint system warning lamp lights up continuously or repeatedly during a journey

Display messages	Possible causes/consequences and ▶ Solutions
	▶ Consult a qualified specialist workshop immediately.
 Front Right Malfunction Service Required	* The restraint system is malfunctioning (→ page 96). **⚠ WARNING** Risk of injury due to malfunctions in the restraint system Components in the restraint system may be activated unintentionally or not deploy as planned in an accident. ▶ Have the restraint system checked and repaired immediately at a qualified specialist workshop. **Plug-in hybrid:** **⚠ DANGER** Risk of death due to the restraint system malfunctioning Components in the restraint system may be activated unintentionally or not deploy as intended in an accident. In the event of an accident, the high-voltage on-board electrical system may not be deactivated as intended. You may receive an electric shock if you touch the damaged components of the high-voltage on-board electrical system. ▶ Have the restraint system checked and repaired immediately at a qualified specialist workshop. ▶ After an accident, switch off the vehicle immediately. Recognition of a restraint system malfunction: • the restraint system warning lamp does not light up when the vehicle is switched on • the restraint system warning lamp lights up continuously or repeatedly during a journey

Display messages	Possible causes/consequences and ▶ Solutions
	▶ Consult a qualified specialist workshop immediately.
 Second Row of Seats, Left Malfunction Service Required	* The restraint system is malfunctioning (→ page 96). **⚠ WARNING** Risk of injury due to malfunctions in the restraint system Components in the restraint system may be activated unintentionally or not deploy as planned in an accident. ▶ Have the restraint system checked and repaired immediately at a qualified specialist workshop. Plug-in hybrid: **⚠ DANGER** Risk of death due to the restraint system malfunctioning Components in the restraint system may be activated unintentionally or not deploy as intended in an accident. In the event of an accident, the high-voltage on-board electrical system may not be deactivated as intended. You may receive an electric shock if you touch the damaged components of the high-voltage on-board electrical system. ▶ Have the restraint system checked and repaired immediately at a qualified specialist workshop. ▶ After an accident, switch off the vehicle immediately. Recognition of a restraint system malfunction: • the restraint system warning lamp does not light up when the vehicle is switched on • the restraint system warning lamp lights up continuously or repeatedly during a journey

Display messages	Possible causes/consequences and ▶ Solutions
	▶ Consult a qualified specialist workshop immediately.
 Second Row of Seats, Right Malfunction Service Required	* The restraint system is malfunctioning (→ page 96). **⚠ WARNING** Risk of injury due to malfunctions in the restraint system Components in the restraint system may be activated unintentionally or not deploy as planned in an accident. ▶ Have the restraint system checked and repaired immediately at a qualified specialist workshop. **Plug-in hybrid:** **⚠ DANGER** Risk of death due to the restraint system malfunctioning Components in the restraint system may be activated unintentionally or not deploy as intended in an accident. In the event of an accident, the high-voltage on-board electrical system may not be deactivated as intended. You may receive an electric shock if you touch the damaged components of the high-voltage on-board electrical system. ▶ Have the restraint system checked and repaired immediately at a qualified specialist workshop. ▶ After an accident, switch off the vehicle immediately. Recognition of a restraint system malfunction: • the restraint system warning lamp does not light up when the vehicle is switched on • the restraint system warning lamp lights up continuously or repeatedly during a journey

Display messages	Possile causes/consequences and ▶ Solutions
	▶ Consult a qualified specialist workshop immediately.
 Left Window Airbag Malfunction Service Required	* The restraint system is malfunctioning (→ page 96). ⚠ **WARNING** Risk of injury or fatal injury due to a malfunction in the window curtain airbag The window curtain airbag might be triggered unintentionally or might not be triggered at all in the event of an accident. ▶ Have the window curtain airbag checked and repaired immediately at a qualified specialist workshop. ▶ Consult a qualified specialist workshop immediately.
 Right Window Airbag Malfunction Service Required	* The restraint system is malfunctioning (→ page 96). ⚠ **WARNING** Risk of injury or fatal injury due to a malfunction in the window curtain airbag The window curtain airbag might be triggered unintentionally or might not be triggered at all in the event of an accident. ▶ Have the window curtain airbag checked and repaired immediately at a qualified specialist workshop. ▶ Consult a qualified specialist workshop immediately.
Front Passenger Airbag Disabled See Operator's Manual	* The front passenger air bag and the front passenger knee air bag have been disabled even though an adult or a person of adult build is on the front passenger seat. If additional forces are applied to the seat, the weight the system detects may be too low.

Display messages	Possible causes/consequences and ▶ Solutions
	⚠ **WARNING** Risk of injury or fatal injury due to a disabled front passenger airbag If the front passenger airbag is disabled, the front passenger airbag will not be deployed in the event of an accident and cannot perform its intended protective function. A person in the front passenger seat could then, for example, come into contact with the vehicle's interior, especially if the person is sitting too close to the cockpit. ▶ Make sure, both before and during the journey, that the status of the front passenger airbag is correct. ▶ Stop the vehicle immediately in accordance with the traffic conditions. ▶ Make sure that no objects are trapped under the front passenger seat. ▶ Check the status of the automatic front passenger air bag shutoff (→ page 98). ▶ If necessary, consult a qualified specialist workshop immediately.
Front Passenger Airbag Enabled See Operator's Manual	* The front passenger air bag and the front passenger knee air bag will be enabled while the vehicle is in motion in the following situations: • even when a child, a small adult or an object weighing less than the system weight threshold is located on the front passenger seat • even when the front passenger seat is not occupied The system may detect objects or forces that are adding to the weight applied to the seat.

Display messages	Possible causes/consequences and ▶ Solutions
	⚠ **WARNING** Risk of injury or death when using a child restraint system while the front passenger airbag is enabled If you secure a child in a child restraint system on the front passenger seat and the front passenger airbag is enabled, the front passenger airbag can deploy in the event of an accident. The child could be struck by the airbag. ▶ Ensure, both before and during the journey, that the status of the front passenger airbag is correct. NEVER use a rearward facing child restraint on a seat protected by an ACTIVE AIRBAG in front of it, DEATH or SERIOUS INJURY to the CHILD can occur. ▶ Stop the vehicle immediately in accordance with the traffic conditions. ▶ Make sure that no objects are trapped under the front passenger seat. ▶ Check the status of the automatic front passenger air bag shutoff (→ page 98). ▶ If necessary, consult a qualified specialist workshop immediately.
Occupant Presence Reminder Inoperative	* The occupant presence reminder is malfunctioning ▶ Consult a qualified specialist workshop.

Display messages	Possible causes/consequences and ▶ Solutions
Do Not Leave People or Animals in the Vehicle	* The occupant presence reminder suspects that there are persons or animals in the rear passenger compartment of the vehicle. ▶ Do not leave any persons or animals behind when leaving the vehicle.

SmartKey

Display messages	Possible causes/consequences and ▶ Solutions
Obtain a New Key	* Have the key replaced. ▶ Consult a qualified specialist workshop.
Replace Key Battery	* The key battery is discharged. ▶ Replace the battery (→ page 129).

Display messages	Possible causes/consequences and ▶ Solutions
 Key Not Detected (white display message)	* The key is currently undetected. ▶ Change the location of the key in the vehicle. ▶ Try to start the vehicle. ▶ If the key is still not detected, place it in the slot for starting with the key (→ page 232). ▶ Start the vehicle.
 Key Not Detected (red display message)	* The key can no longer be detected during a journey and may no longer be in the vehicle. If the key is no longer in the vehicle and you switch off the vehicle: • You can no longer start the vehicle. • You cannot centrally lock the vehicle. ▶ Ensure that the key is in the vehicle. If the key is in the vehicle and is still not detected: ▶ Stop the vehicle immediately in accordance with the traffic conditions. ▶ Place the key in the slot for starting the engine with the key (→ page 232). The key battery is weak or discharged. ▶ Check the battery using the indicator lamp (→ page 127). ▶ Replace the key battery, if necessary (→ page 129).

Display messages	Possible causes/consequences and ▶ Solutions
Initializing Key Please Wait	* The vehicle is processing in order to teach in the new key. ▶ Wait until processing is complete.
Don't Forget Your Key	* A warning tone will also sound. This message reminds you to take your key with you when you leave the vehicle.
Place the Key in the Marked Space See Operator's Manual	* Key detection is malfunctioning. ▶ Change the location of the key in the vehicle. ▶ Place the key in the slot for starting the engine with the key (→ page 232).

Lights

Display messages	Possible causes/consequences and ▶ Solutions
Malfunction See Operator's Manual	* The exterior lighting is malfunctioning. ▶ Consult a qualified specialist workshop.
Automatic Driving Lights Inoperative	* The light sensor for automatic driving lights is malfunctioning. ▶ Consult a qualified specialist workshop.
Switch On Headlights	* You are driving without low-beam headlamps. ▶ Turn the light switch to the [≡D] or [AUTO] position.

Display messages	Possible causes/consequences and ▶ Solutions
Switch Off Lights	* You are leaving the vehicle and the lights are still switched on. ▶ Turn the light switch to the AUTO position.
DIGITAL LIGHT Functions Limited	* The DIGITAL LIGHT system is malfunctioning. The lighting system will continue to work even without the functions of the DIGITAL LIGHT system. ▶ Consult a qualified specialist workshop.
Adaptive Highbeam Assist Currently Unavailable See Operator's Manual	* Adaptive Highbeam Assist is temporarily unavailable. The system limits have been reached (→ page 198). Once the cause of the problem is no longer present, the system will be available again. The Adaptive Highbeam Assist Now Available display message will appear. ▶ Drive on. ▶ Operate the high beam manually until Adaptive Highbeam Assist is available again.
Adaptive Highbeam Assist Inoperative	* Adaptive Highbeam Assist is malfunctioning. ▶ Drive on or ▶ Stop the vehicle in accordance with the traffic conditions and restart the vehicle. ▶ If the display message does not disappear: consult a qualified specialist workshop. ▶ Until then, operate the high beam manually.

Display messages	Possible causes/consequences and ▶ Solutions
Adaptive Highbeam Assist Plus Currently Unavailable See Operator's Manual	* Adaptive Highbeam Assist Plus is temporarily unavailable. The system limits have been reached (→ page 199). Once the cause of the problem is no longer present, the system will be available again. The Adaptive Highbeam Assist Plus Now Available display message will appear. ▶ Drive on. ▶ Operate the high beam manually until Adaptive Highbeam Assist Plus is available again.
Adaptive Highbeam Assist Plus Inoperative	* Adaptive Highbeam Assist Plus is malfunctioning. ▶ Drive on. or ▶ Stop the vehicle in accordance with the traffic conditions and restart the vehicle. ▶ If the display message does not disappear: consult a qualified specialist workshop. ▶ Until then, operate the high beam manually.
Hazard Warning Light Malfunction	* The hazard warning lamp switch is malfunctioning. ▶ Consult a qualified specialist workshop.
 Parking Light Front Left	* The front left parking light is malfunctioning. ▶ Consult a qualified specialist workshop.

Display messages	Possible causes/consequences and ▶ Solutions
Parking Light Front Right	* The front right parking light is malfunctioning. ▶ Consult a qualified specialist workshop.
Check Left Low Beam	* The left low beam is malfunctioning. ▶ Consult a qualified specialist workshop.
Check Right Low Beam	* The right low beam is malfunctioning. ▶ Consult a qualified specialist workshop.
Check Left High Beam	* The left high beam is malfunctioning. ▶ Consult a qualified specialist workshop.

Display messages	Possible causes/consequences and ▶ Solutions
Check Right High Beam	* The right high beam is malfunctioning. ▶ Consult a qualified specialist workshop.
Check Left Daytime Running Light	* The left daytime running lights are malfunctioning. ▶ Consult a qualified specialist workshop.
Check Right Daytime Running Light	* The right-hand daytime running lights are malfunctioning. ▶ Consult a qualified specialist workshop.
Check Left Cornering Light	* The left cornering light is malfunctioning. ▶ Consult a qualified specialist workshop.

Display messages	Possible causes/consequences and ▶ Solutions
Check Right Cornering Light	* The right cornering light is malfunctioning. ▶ Consult a qualified specialist workshop.
Turn Signal Indicator, Front Left	* The front left turn signal lamp is malfunctioning. ▶ Consult a qualified specialist workshop.
Turn Signal Indicator, Rear Left	* The rear left turn signal lamp is malfunctioning. ▶ Consult a qualified specialist workshop.

Display messages	Possible causes/consequences and ▶ Solutions
Turn Signal Indicator, Front Right	* The front right turn signal lamp is malfunctioning. ▶ Consult a qualified specialist workshop.
Turn Signal Indicator, Rear Right	* The rear right turn signal lamp is malfunctioning. ▶ Consult a qualified specialist workshop.
Turn Signal Indicator, Left Mirror	* The turn signal lamp on the left mirror is malfunctioning. ▶ Consult a qualified specialist workshop.

Display messages	Possible causes/consequences and ▶ Solutions
Turn Signal Indicator, Right Mirror	* The turn signal lamp on the right mirror is malfunctioning. ▶ Consult a qualified specialist workshop.
Brake Light Left	* The left brake light is malfunctioning. ▶ Consult a qualified specialist workshop.
Brake Light Right	* The right brake light is malfunctioning. ▶ Consult a qualified specialist workshop.
Center Brake Light	* The third brake light is malfunctioning. ▶ Consult a qualified specialist workshop.

Display messages	Possible causes/consequences and ▶ Solutions
Tail Light Left	* The left tail light is malfunctioning. ▶ Consult a qualified specialist workshop.
Tail Light Right	* The right tail light is malfunctioning. ▶ Consult a qualified specialist workshop.
Reversing Light	* The reversing light is malfunctioning. ▶ Consult a qualified specialist workshop.
Rear Fog Light	* The rear fog light is malfunctioning. ▶ Consult a qualified specialist workshop.

Display messages	Possible causes/consequences and ▶ Solutions
License Plate Light	* The license plate lamp is malfunctioning. ▶ Consult a qualified specialist workshop.
Trailer Turn Signal Indicator, Left	* The left turn signal lamp on the trailer is malfunctioning. ▶ Consult a qualified specialist workshop.
Trailer Turn Signal Indicator, Right	* The right turn signal lamp on the trailer is malfunctioning. ▶ Consult a qualified specialist workshop.
Trailer Brake Light	* The brake light on the trailer is malfunctioning. ▶ Consult a qualified specialist workshop.

Display messages	Possible causes/consequences and ▶ Solutions
Trailer Tail Light	* A tail light on the trailer is malfunctioning. ▶ Consult a qualified specialist workshop.
Indicator Lamp in Driver's Display Inoperative Service Required	* An indicator lamp on the driver's display is defective. ▶ Consult a qualified specialist workshop.

Climate control

Display messages	Possible causes/consequences and ▶ Solutions
Currently Not Available Charging of the High-voltage Battery Not Completed	* The high-voltage battery is charging. Pre-entry climate control cannot be switched on. ▶ Wait until the charging process has achieved a minimum condition of charge.

Display messages	Possible causes/consequences and ▶ Solutions
Currently Not Available Charge High-voltage Battery	* The charge of the high-voltage battery is too low. Pre-entry climate control cannot be switched on. ▶ Charge the high-voltage battery (→ page 273).
Pre-entry Climate Control Available Again via SmartKey after Vehicle Start	* You have attempted to switch on pre-entry climate control more than twice with the vehicle switched off. ▶ Start the vehicle for ten seconds. Pre-entry climate control is operational again.
Pre-entry Climate Control via SmartKey Currently Not Available. High-voltage Battery Low	* The charge of the high-voltage battery is too low. Pre-entry climate control cannot be switched on. ▶ Charge the high-voltage battery (→ page 273). When the high-voltage battery is sufficiently charged, pre-entry climate control will be operational again.

Drive system

Display messages	Possible causes/consequences and ▶ Solutions
Towing Not Permitted See Operator's Manual	* The drive system is malfunctioning. ▶ Have the vehicle transported using only a transporter or trailer (→ page 591).
Acoustic Presence Indicator Inoperative	* The sound generator (acoustic vehicle warning system) is malfunctioning. No vehicle noises are being produced. The vehicle may not be heard by other road users. ▶ Drive with particular care. ▶ Consult a qualified specialist workshop.
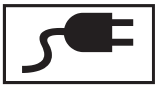 Charger Cable Connected	* You cannot pull away while the charging cable is connected. ▶ Disconnect the charging cable from the vehicle.
Not Possible to Unlock Charging Cable See Operator's Manual	* The charging cable connector cannot be removed from the vehicle socket. ▶ If the charging cable is under strain, relieve the strain on the charging cable connector by carefully pulling on the charging cable.

Display messages	Possible causes/consequences and ▶ Solutions
	▶ Press the charging interruption button (→ page 284). If the charging cable connector cannot be removed after that: ▶ Consult a qualified specialist workshop.
Vehicle Currently Not Charging... Charging Station Fault	* A malfunction has occurred in the charging station or the RFID card is not recognized. ▶ Start the charging process at a different charging station. or ▶ Use an alternative authentication method or payment method.
Charging Fault Change Charging Mode See Operator's Manual	* A temporary malfunction has occurred in the charging station. ▶ Wait until the malfunction has passed. or ▶ Start the charging process at a different charging station. or ▶ Use an alternative authentication method or payment method.
AC Charging Inoperative Service Required	* The charging process cannot be started due to a malfunction. ▶ Consult a qualified specialist workshop.
DC Charging Inoperative Service Required	* The charging process cannot be started due to a malfunction. ▶ Consult a qualified specialist workshop.

Display messages	Possible causes/consequences and ▶ Solutions
Authentication Failed Use Different Authentication Method or Charging Station	* Plug-and-Charge is not expected to be available at this charging station. ▶ Use an alternative authentication method or payment method. or ▶ Start the charging process at a different charging station.
Only Electric Drive Available Power Limited	* The fuel tank is empty and the combustion engine is switched off. The output of your vehicle is limited because you are driving in electric mode. ▶ Refuel immediately. Subsequently, there may be temporary restrictions in the availability of electric mode over a distance of 31 mi (50 km). If there is fuel in the vehicle, there is a malfunction with the combustion engine. ▶ Consult a qualified specialist workshop.
"Electric" Drive Program Currently Unavailable	* The state of charge of the high-voltage battery or the ambient conditions are not sufficient for the Electric drive program. ▶ Drive on and observe the notes on plug-in hybrid operation (→ page 227). or ▶ Charge the high-voltage battery (→ page 273).

Display messages	Possible causes/consequences and ▶ Solutions
Reduced Drive System Performance See Operator's Manual	* The drive system switches to emergency operation mode due to a malfunction. ▶ Drive on carefully. ▶ Consult a qualified specialist workshop.
Preparing Drive System...	* The insulation of the drive system is being tested. This process can last for up to ten seconds.
 Battery Overheated Stop! Everyone Get Out! Outdoors if Possible	* **Plug-in hybrid:** the high-voltage battery has overheated. There is a risk of fire. ▶ Stop the vehicle immediately in accordance with the traffic conditions. ▶ If possible, stop the vehicle in the open air and ensure that all vehicle occupants get out. ⓘ Supporting vehicle functions may activate automatically, e.g. air-recirculation mode as part of climate control. ▶ Do not continue driving. ▶ If smoke is present, leave the danger zone and call the fire service immediately. ▶ Consult a qualified specialist workshop even if there are no external signs of a fire.
 Malfunction	* The drive system is malfunctioning. A warning tone will also sound. ▶ Consult a qualified specialist workshop.

Display messages	Possible causes/consequences and ▶ Solutions
Malfunction Service Required	* The drive system is malfunctioning. ▶ Consult a qualified specialist workshop.
Have High-Voltage System Checked See Operator's Manual	* A function restriction has occurred in the drive system. ▶ Consult a qualified specialist workshop.
Service Required Do Not Change Transmission Position	* The transmission is malfunctioning. It is no longer possible to change the transmission position. ▶ If transmission position D is selected, consult a qualified specialist workshop and do not change the transmission position. ▶ For all other transmission positions, park the vehicle safely. ▶ Consult a qualified specialist workshop or breakdown service.
Do Not Restart Vehicle Service Required	* It is not possible to restart the drive system due to a malfunction. ▶ Do not switch off the drive system; drive on to the nearest qualified specialist workshop.

Display messages	Possible causes/consequences and ▶ Solutions
 Drive Power and Range Reduced See Operator's Manual	* A malfunction has occurred in the high-voltage battery. Output and range will be severely restricted. ▶ Switch the vehicle off and lock it. ▶ After waiting for a short time, unlock the vehicle and start it again. If the display message appears again: ▶ Drive on carefully. ▶ Fully charge the high-voltage battery (→ page 273). If the output and range are still reduced, there is a malfunction in the drive system. ▶ Drive on carefully. ▶ Consult a qualified specialist workshop.
Cannot Start Vehicle See Operator's Manual	* It is not possible to start the vehicle. A malfunction has occurred in the drive system. ▶ Switch the vehicle off and lock it. ▶ After waiting for a short time, unlock the vehicle and start it again. ▶ If the display message appears again and the vehicle does not start, consult a qualified specialist workshop.

Display messages	Possible causes/consequences and ▶ Solutions
Drive Malfunction Achievable Speed Limited Stop Soon	* The drive system is malfunctioning. The maximum vehicle speed is restricted. The drive system will shut off within a few kilometers. ▶ Stop the vehicle immediately in accordance with the traffic conditions and switch off the drive system. Do not continue driving. ▶ Do not tow the vehicle; stop towing if necessary. ▶ Consult a qualified specialist workshop.
Drive Malfunction Achievable Speed Severely Limited See Operator's Manual	* The drive system is malfunctioning. The maximum vehicle speed is restricted. ▶ Consult a qualified specialist workshop.
 Malfunction	* The drive system is malfunctioning. The output of your vehicle is restricted. ▶ Consult a qualified specialist workshop.
 Stop Switch Off Vehicle	* The drive system is malfunctioning. ▶ Stop the vehicle immediately in accordance with the traffic conditions and switch off the drive system. Do not continue driving. ▶ Do not tow the vehicle; stop towing if necessary. ▶ Consult a qualified specialist workshop.

Display messages	Possible causes/consequences and ▶ Solutions
 Performance Extremely Limited	* The drive system is outside the normal operating temperature range, e.g. due to extremely low or high outside temperatures. The output is severely restricted. Once the operating temperature of the drive system returns to normal, the full output will be available again. The display message will disappear. * If the drive system power output is still reduced, there is a malfunction in the drive system. ▶ Drive on carefully. ▶ Consult a qualified specialist workshop.
 Please Wait Depressurizing Fuel Tank	* **Vehicles with gasoline engine:** The pressure in the fuel tank is reduced before the fuel filler flap is opened. This pressure reduction can take up to 15 minutes.
 Fuel Tank Is Depressurized Ready for Refueling	* **Vehicles with gasoline engine:** The pressure in the fuel tank is released and the fuel filler flap opens.

Display messages	Possible causes/consequences and ▶ Solutions
Tank Ventilation Malfunction Service Required	* **Vehicles with gasoline engine:** There is a malfunction in the fuel system. ▶ Consult a qualified specialist workshop.

Vehicle

Display messages	Possible causes/consequences and ▶ Solutions
	* The driver display is inoperative due to a failed software update. The display message will be shown every time the engine is started. ⚠ **WARNING** Risk of accident if the driver's display fails If the driver's display fails or malfunctions, you may not be aware of any functional limitations to safety-critical systems. This may affect the operating safety of the vehicle. ▶ Park the vehicle safely as soon as possible and notify a qualified specialist workshop. If the operating safety of your vehicle is impaired, park the vehicle immediately and safely. Contact a qualified specialist workshop.

Display messages	Possible causes/consequences and ▶ Solutions
	If the driver display fails, you may not recognize function restrictions affecting systems relevant to safety or the speed display, for example. The operating safety of the vehicle may be impaired (→ page 451). ▶ Have the vehicle checked by a qualified specialist workshop immediately.
Cannot Start Vehicle See Operator's Manual	* The vehicle cannot be started. ▶ Switch the vehicle off and switch it back on. ▶ If the display message still appears, consult a qualified specialist workshop. * **Vehicles with 48 V on-board electrical system:** the state of charge of the 48 V battery is too low. You can no longer start the vehicle. ▶ Switch off electrical consumers that are not required. ▶ Connect a suitable charger approved for Mercedes-Benz with sufficient charging power to the jump-start connection point of the 12 V battery (→ page 50). The 48 V battery is charged via the voltage converter in the vehicle. * **Mercedes-AMG vehicles with plug-in hybrid:** the charging cable is inserted. ▶ Disconnect the charging cable from the vehicle. * **Mercedes-AMG vehicles with plug-in hybrid:** the charging cable is not inserted. ▶ Switch off the vehicle for five to ten minutes. ▶ Switch on the vehicle. ▶ If the display message still appears, consult a qualified specialist workshop.

Display messages	Possible causes/consequences and ▶ Solutions
Vehicle Ready to Drive Shutdown Occurs When Locked or After a Few Minutes	* You are leaving the vehicle in a ready-to-drive state. ▶ Get out of the vehicle, secure it against rolling away and take the key with you. ▶ If you do not leave the vehicle, switch off the electrical consumers, e.g. the seat heating. Otherwise, the 12-V battery may discharge and starting the engine may be possible only with the help of a second battery (starting assistance).
Vehicle Ready to Drive Shutdown Occurs When Locked or Automatically in XX Mins	* You are about to leave the vehicle and the engine is running. The vehicle will switch off automatically in 20 minutes. ▶ To prevent the vehicle from switching off automatically, confirm the message in the central display of the multimedia system. * You are in the vehicle. Park position P is engaged and the engine is running. After a certain time of being at a standstill, this display message will appear in the driver's display. The vehicle will then be automatically switched off after a total parked time of 20 minutes. ▶ To prevent the vehicle from switching off automatically, confirm the message in the central display of the multimedia system.
Head-up Display Currently Unavailable See Operator's Manual	* The head-up display is temporarily unavailable. Possible causes are: • malfunctions in the power supply • signal interference ▶ Stop in accordance with the traffic conditions and switch the vehicle off and on again. ▶ If the display message still appears, consult a qualified specialist workshop.

Display messages	Possible causes/consequences and ▶ Solutions
Head-up Display Inoperative	* The head-up display has an internal error. ▶ Consult a qualified specialist workshop.
Head-up Display Brightness Currently Reduced See Operator's Manual	* The brightness of the head-up display is reduced. Possible causes: • Dirt on the windshield in the camera's field of vision • Faulty exterior brightness signals ▶ Switch on the windshield wipers. ▶ Clean the windshield if necessary. ▶ Switch the vehicle off and switch it back on ▶ If the display message still appears, consult a qualified specialist workshop.
Steering Malfunction Drive Carefully Service Required	* A power steering malfunction has occurred. Steering characteristics may be impaired as a result. ▶ Drive on carefully. ▶ Consult a qualified specialist workshop.

Display messages	Possible causes/consequences and ▶ Solutions
 Steering Malfunction Increased Physical Effort See Operator's Manual	* The power steering assistance is malfunctioning. ⚠ **WARNING** Risk of an accident due to altered steering characteristics If the power assistance of the steering fails partially or completely, you will need to use more force to steer. ▶ If safe steering is possible, drive on carefully. ▶ Visit or consult a qualified specialist workshop immediately. ▶ If safe steering is possible, drive on carefully. ▶ Visit or consult a qualified specialist workshop immediately.
 Steering Malfunction Stop Immediately See Operator's Manual	* The steering is malfunctioning. Steering capability is significantly impaired. ⚠ **WARNING** Risk of accident if steering capability is impaired If the steering does not function as intended, the vehicle's operating safety is jeopardized. ▶ Pull over and stop the vehicle safely as soon as possible, paying attention to road and traffic conditions. Do not continue driving under any circumstances. ▶ Consult a qualified specialist workshop. ▶ Stop the vehicle immediately in accordance with the traffic conditions. Do not continue driving under any circumstances. ▶ Consult a qualified specialist workshop.

Display messages	Possible causes/consequences and ▶ Solutions
Rear Axle Steering Currently Malfunctioning	* The rear axle steering is temporarily unavailable. The turning circle may become wider. ▶ Stop the vehicle in accordance with the traffic conditions and restart the vehicle. If the display message does not disappear: ▶ Drive on carefully. ▶ Consult a qualified specialist workshop.
Rear Axle Steering Malfunction Service Required	* The rear axle steering is malfunctioning. The rear axle has no steering capability. The steering wheel may be at an angle when you drive in a straight line. ▶ Adapt your speed and drive on carefully. ▶ Consult a qualified specialist workshop immediately.
Rear Axle Steering Malfunction Stop Immediately	* The rear axle steering is malfunctioning. The rear axle has no steering capability. The steering wheel may be tilted considerably when you drive in a straight line. Depending on the steering wheel's tilted position, the steering wheel will also vibrate and a continuous warning tone will sound. ⚠ **WARNING** Risk of accident if steering capability is impaired If the steering does not function as intended, the vehicle's operating safety is jeopardized.

Display messages	Possible causes/consequences and ▶ Solutions
	▶ Pull over and stop the vehicle safely as soon as possible, paying attention to road and traffic conditions. Do not continue driving under any circumstances. ▶ Consult a qualified specialist workshop. ▶ Stop the vehicle immediately in accordance with the traffic conditions. Do not continue driving. ▶ When stopping, bear the enlarged vehicle width in mind. ▶ Consult a qualified specialist workshop.
Snow Chain Mode Maximum Speed Exceeded	* The maximum permissible speed for snow chain mode has been exceeded. ▶ Drive more slowly.
	* At least one door is open. ▶ Close all doors.
	* The hood is open. ⚠ **WARNING** Risk of accident due to driving with the hood unlocked The hood may open and block your view. ▶ Never release the hood when driving. ▶ Before every trip, ensure that the hood is locked.

Display messages	Possible causes/consequences and ▶ Solutions
	▶ Stop the vehicle immediately in accordance with the traffic conditions. ▶ Close the hood.
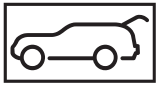	* The tailgate is open. ⚠ **DANGER** Risk of exhaust gas poisoning Combustion engines emit poisonous exhaust gases such as carbon monoxide. Exhaust gases can enter the vehicle interior if the tailgate is open when the engine is running, especially if the vehicle is in motion. ▶ Always switch off the engine before opening the tailgate. ▶ Never drive with the tailgate open. ▶ Close the tailgate.
 Rear Left Backrest Not Latched	* The seat backrest of the corresponding seat is not engaged. ▶ Fold the seat backrest back until it engages.

Display messages	Possible causes/consequences and ▶ Solutions
Rear Right Backrest Not Latched	* The seat backrest of the corresponding seat is not engaged. ▶ Fold the seat backrest back until it engages.
Add Washer Fluid	* The washer fluid level in the washer fluid reservoir has dropped below the minimum. ▶ Add washer fluid (→ page 25).
Windshield Wiper Malfunction	* The windshield wiper is malfunctioning. ▶ Restart the vehicle. If the display message still appears: ▶ Consult a qualified specialist workshop.
4matic Currently Unavailable	* 4MATIC is currently unavailable. ▶ Drive on carefully. ▶ Consult a qualified specialist workshop.
4matic Inoperative	* 4MATIC is inoperative.

Display messages	Possible causes/consequences and ▶ Solutions
	▶ Drive on carefully. ▶ Consult a qualified specialist workshop.

Engine

Display messages	Possible causes/consequences and ▶ Solutions
To Switch Off Vehicle Press and Hold Start/Stop Button for at Least 3 Seconds or Press 3 Times	* You have pressed the start/stop button while the vehicle is in motion. ▶ Information about switching off the vehicle while driving (→ page 231).
 Check Coolant Level See Operator's Manual	* The coolant level is too low. ! NOTE Engine damage due to insufficient coolant ▶ Avoid long journeys with insufficient coolant. ▶ Add coolant (→ page 563). ▶ Have the engine cooling system checked at a qualified specialist workshop.

Display messages	Possible causes/consequences and ▶ Solutions
 Coolant Stop Switch Off Vehicle	* The coolant is too hot. ▶ Stop immediately in accordance with the traffic conditions and switch off the vehicle. ⚠ **WARNING** Risk of burns when opening the hood If you open the hood in the event of an overheated engine or fire in the engine compartment, the following situations may occur: • You may come into contact with hot gases. • You may come into contact with other escaping hot operating fluids. ▶ Before opening the hood, allow the engine to cool down. ▶ In the event of a fire in the engine compartment, keep the hood closed and call the fire service. ▶ Wait until the engine has cooled down. ▶ Make sure that the air supply to the radiator is not obstructed. ▶ Avoiding high loads on the engine, drive to the nearest qualified specialist workshop. In doing so, ensure that the coolant temperature display remains below the red marking.
 Fuel Reserve	* The fuel supply has dropped into the reserve range. ▶ Refuel.

Display messages	Possible causes/consequences and ▶ Solutions
Fuel Filler Cap Open	* The fuel filler cap is not closed correctly or the fuel system is leaking. ▶ Close the fuel filler cap. ▶ **If the fuel filler cap was already properly closed:** consult a qualified specialist workshop.

Transmission

Display messages	Possible causes/consequences and ▶ Solutions
Shift to P Only When Vehicle Is Stationary	* It is possible to select the park position P only if the vehicle is stationary. ▶ Depress the brake pedal to stop. ▶ Shift the transmission to park position P when the vehicle is stationary.
Depress Brake to Shift from P	* You have attempted to shift the transmission out of park position P and into another transmission position. ▶ Depress the brake pedal. ▶ Select transmission position D, R or neutral N.
To Deselect P or N Depress Brake and Start Vehicle	* You have attempted to shift the transmission out of park position P or neutral N and into another transmission position. ▶ Depress the brake pedal. ▶ Start the vehicle.

Display messages	Possible causes/consequences and ▶ Solutions
	▶ Change the transmission position.
Depress Brake to Shift to D or R	* You have attempted to select transmission position D or R. ▶ Depress the brake pedal. ▶ Select transmission position D or R.
Depress Brake to Shift to R	* You have attempted to select transmission position R. ▶ Depress the brake pedal. ▶ Select transmission position R.
Service Required Apply Parking Brake to Park	* A malfunction has occurred in the emergency power supply to park position P. ▶ Consult a qualified specialist workshop. ▶ Until then, always select park position P manually before you switch off the vehicle. ▶ Before leaving the vehicle, apply the electric parking brake.
Risk of Vehicle Rolling Away Driver's Door Open Position P Not Selected	* The driver's door is not fully closed and transmission position D, R or neutral N is selected. The vehicle may roll away. ▶ Select park position P when switching off the vehicle.
Risk of Vehicle Rolling Away Apply Parking Brake When Parking	* The transmission is malfunctioning. Park position P cannot be selected. ▶ Park the vehicle safely. ▶ Use the electric parking brake to secure the vehicle against rolling away.

Display messages	Possible causes/consequences and ▶ Solutions
	▶ On gradients, turn the front wheels so that the vehicle will roll towards the curb if it starts moving.
Risk of Vehicle Rolling Away N Activated Manually No Automatic Change to P	* While the vehicle was at a standstill or driving at very low speed, neutral N was engaged with the engine running or the vehicle switched on. ! NOTE Damage to the vehicle due to rolling away When the vehicle is switched off or the driver's door is opened, automatic engagement of park position P is deactivated. The vehicle may roll away. ▶ Be ready to brake. ▶ Do not leave the vehicle unattended. ▶ Depress the brake pedal until the vehicle comes to a standstill. ▶ Engage park position P when the vehicle is stationary with the brake pedal depressed. ▶ To continue driving with the brake pedal depressed, select transmission position D or R.
N Automatically Activated Please Shift to Transmission Position Again	* Neutral N was automatically engaged when the vehicle was rolling or being driven. ⓘ When you open the driver's door in neutral N, park position P will be engaged automatically. ▶ Engage park position P when the vehicle is stationary with the brake pedal depressed. ▶ To continue driving with the brake pedal depressed, select transmission position D or R.

Display messages	Possible causes/consequences and ▶ Solutions
N is Engaged Shift to Desired Drive Range	* The accelerator pedal was depressed while the vehicle was rolling or moving in neutral N. ▶ To accelerate the vehicle, select transmission position D or R.
To shift to N, hold selector lever longer in N position	* Selector lever not held for long enough in position N. The change from parking position P to neutral N is possible only if the selector lever is held in N for a longer period of time. If the selector lever is not held down for long enough, parking position P remains engaged. ▶ When changing from parking position P to neutral N, hold the selector lever in position N for longer.
Reversing Not Possible Service Required	* The transmission is malfunctioning. It is not possible to select transmission position R. ▶ Consult a qualified specialist workshop.
Transmission Malfunction Stop	* The transmission is malfunctioning. The transmission shifts to neutral N automatically. ▶ Stop the vehicle immediately in accordance with the traffic conditions. ▶ Depress the brake pedal. ▶ Engage park position P. ▶ Consult a qualified specialist workshop.
Service Required Do Not Change Transmission Position	* The transmission is malfunctioning. It is no longer possible to change the transmission position. ▶ If transmission position D is selected, consult a qualified specialist workshop and do not change the transmission position. ▶ For all other transmission positions, park the vehicle safely.

Display messages	Possible causes/consequences and ▶ Solutions
	▶ Consult a qualified specialist workshop or breakdown service.
Auxiliary Battery Malfunction (white display message)	* There is a malfunction in the auxiliary battery. ▶ Consult a qualified specialist workshop. ▶ Until then, always select park position P manually before you switch off the vehicle. ▶ Before leaving the vehicle, apply the electric parking brake.
Auxiliary Battery Malfunction (red display message)	* There is a malfunction in the auxiliary battery. ▶ Consult a qualified specialist workshop. ▶ Until then, always select park position P manually before you switch off the vehicle. ▶ Before leaving the vehicle, apply the electric parking brake.

Brakes

Display messages	Possible causes/consequences and ▶ Solutions
PARK (USA only) (Ⓟ) (Canada only) Parking Brake See Operator's Manual	* The yellow (Ⓟ) indicator lamp is lit. The electric parking brake is malfunctioning. **To apply:** ▶ Switch the vehicle off and switch it back on ▶ Apply the electric parking brake manually (→ page 300). If it is not possible to apply the electric parking brake: ▶ Consult a qualified specialist workshop. ▶ Where necessary, also secure the parked vehicle against rolling away. * The yellow (Ⓟ) indicator lamp and the red PARK (USA only) or (Ⓟ) (Canada only) indicator lamp are lit. The electric parking brake is malfunctioning. **To release:** ▶ Switch the vehicle off and switch it back on ▶ Release the electric parking brake manually (→ page 300). or ▶ Release the electric parking brake automatically (→ page 299). If it is still not possible to release the electric parking brake: ▶ Do not continue driving. Consult a qualified specialist workshop.

Display messages	Possible causes/consequences and ▶ Solutions
	* The yellow (P) indicator lamp is lit and the red PARK (USA only) or (P) (Canada only) indicator lamp is flashing. The electric parking brake is malfunctioning. The electric parking brake could not be applied or released. ▶ Switch the vehicle off and switch it back on **To apply:** ▶ Release and then apply the electric parking brake manually (→ page 300). **To release:** ▶ Apply and then release the electric parking brake manually. If the electric parking brake cannot be applied or the red PARK (USA only) or (P) (Canada only) indicator lamp continues to flash: ▶ Do not continue driving. Consult a qualified specialist workshop. ▶ Where necessary, also secure the parked vehicle against rolling away. * The yellow (P) indicator lamp is lit and the red PARK indicator lamp (USA only) or (P) indicator lamp (Canada only) flashes for approximately ten seconds after the electric parking brake has been applied or released. It then remains lit or goes out. The electric parking brake is malfunctioning. **If the state of charge is too low:** ▶ Charge the 12 V battery (→ page 50).

Display messages	Possible causes/consequences and ▶ Solutions
	To apply: ▶ Apply the electric parking brake manually. If it is not possible to apply the electric parking brake: ▶ Consult a qualified specialist workshop. ▶ Where necessary, also secure the parked vehicle against rolling away. **To release:** ▶ If the conditions for automatic release are fulfilled and the electric parking brake is not released automatically, release the electric parking brake manually (→ page 300). If it is still not possible to release the electric parking brake: ▶ Do not continue driving. Consult a qualified specialist workshop.

Display messages	Possible causes/consequences and ▶ Solutions
PARK (USA only) (P) (Canada only) Release Parking Brake	* The red PARK indicator lamp (USA only) or (P) indicator lamp (Canada only) is flashing. The electric parking brake is applied while you are driving: • A condition for automatic release of the electric parking brake has not been fulfilled (→ page 299). • You are performing emergency braking using the electric parking brake (→ page 301). ▶ Check the conditions for automatic release of the electric parking brake. ▶ Release the electric parking brake manually.
PARK (USA only) (P) (Canada only) Switch on Vehicle to Release the Parking Brake	* The red PARK (USA only) or (P) (Canada only) indicator lamp is lit. You have attempted to release the electric parking brake with the vehicle switched off. ▶ Switch on the vehicle.

Display messages	Possible causes/consequences and ▶ Solutions
BRAKE (USA only) (Canada only) Brake Immediately	* A malfunction has occurred while the HOLD function was activated. A horn may also sound at regular intervals. You cannot start the vehicle system. ▶ Immediately depress the brake pedal firmly until the display message disappears. You cannot start the vehicle system again.
BRAKE (USA only) (Canada only) Malfunction See Operator's Manual	* The brake force boosting function is impaired. The hill start assist may be impaired. ⚠ **WARNING** Risk of an accident due to a brake system malfunction If the brake system is malfunctioning, braking characteristics may be impaired. ▶ Drive on carefully. ▶ Have the brake system checked immediately at a qualified specialist workshop. ▶ Adjust your speed and drive on carefully, leaving a suitable distance to the vehicle in front. ▶ Consult a qualified specialist workshop.

Display messages	Possible causes/consequences and ▶ Solutions
BRAKE (USA only) (Canada only) Malfunction Stop	* The brake force boosting function is impaired and the braking characteristics may be affected. **WARNING** Risk of accident and injury if brake force boosting is malfunctioning If brake force boosting is malfunctioning, increased brake pedal force may be necessary for braking. The braking characteristics may be impaired. The braking distance can increase in emergency braking situations. ▶ Stop in a safe location immediately. Do not continue driving. ▶ Consult a qualified specialist workshop. ▶ Stop the vehicle immediately in accordance with the traffic conditions. Do not continue driving. ▶ Consult a qualified specialist workshop.
BRAKE (USA only) (Canada only) Check Brake Fluid Level	* There is insufficient brake fluid in the brake fluid reservoir. **WARNING** Risk of an accident due to low brake fluid level If the brake fluid level is too low, the braking effect and the braking characteristics may be impaired. ▶ Pull over and stop the vehicle safely as soon as possible, paying attention to road and traffic conditions. Do not continue driving under any circumstances. ▶ Consult a qualified specialist workshop. ▶ Do not add brake fluid. ▶ Stop the vehicle immediately in accordance with the traffic conditions. Do not continue driving.

Display messages	Possible causes/consequences and ▶ Solutions
	▶ Do not add brake fluid. ▶ Consult a qualified specialist workshop.
Check Brake Pads See Operator's Manual	* The brakepads have reached the wear limit. ▶ Consult a qualified specialist workshop.

Driving and driving safety systems

Display messages	Possible causes/consequences and ▶ Solutions
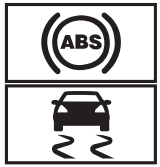 Currently Unavailable See Operator's Manual (ABS and ESP®)	* ABS and ESP® are temporarily unavailable. Other driving systems and driving safety systems (e.g. BAS) may also be temporarily unavailable. The brake system will continue to operate normally. Braking distance may increase in an emergency braking situation. ⚠ **WARNING** Risk of skidding if ABS and ESP® are malfunctioning The wheels may lock during braking and ESP® does not perform any vehicle stabilization. The steerability and braking characteristics are heavily impaired and the braking distance may increase. In addition, other driving safety systems are switched off. ▶ Drive carefully on a suitable stretch of road, making slight steering movements at a speed above 19 mph (30 km/h).

Display messages	Possible causes/consequences and ▶ Solutions
	▶ If the display message does not disappear, consult a qualified specialist workshop immediately. Drive carefully. ▶ Drive carefully on a suitable stretch of road, making slight steering movements at a speed above 19 mph (30 km/h). ▶ If the display message does not disappear, consult a qualified specialist workshop immediately. Drive carefully.
 Inoperative See Operator's Manual (ABS and ESP®)	* ABS and ESP® are malfunctioning. Other driving systems and driving safety systems (e.g. BAS) may also be malfunctioning. The brake system will continue to operate normally. Braking distance may increase in an emergency braking situation. ⚠ **WARNING** Risk of skidding if ABS and ESP® are malfunctioning The wheels may block during braking and ESP® does not perform any vehicle stabilization. The steerability and braking characteristics are heavily impaired and the braking distance may increase. In addition, other driving safety systems are switched off. ▶ Drive on carefully. ▶ Have ABS and ESP® checked immediately at a qualified specialist workshop. ▶ Drive on carefully. ▶ Consult a qualified specialist workshop immediately.

Display messages	Possible causes/consequences and ▶ Solutions
 Currently Unavailable See Operator's Manual (ESP®)	* ESP® is temporarily unavailable. Other driving systems and driving safety systems (e.g. BAS) may also be malfunctioning. ⚠ **WARNING** Risk of skidding if ESP is malfunctioning® If ESP® is malfunctioning, ESP® cannot carry out vehicle stabilization. In addition, other driving safety systems are switched off. ▶ Drive carefully on a suitable stretch of road, making slight steering movements at a speed above 19 mph (30 km/h). ▶ If the display message does not disappear, consult a qualified specialist workshop immediately. Drive carefully. ▶ Drive carefully on a suitable stretch of road, making slight steering movements at a speed above 19 mph (30 km/h). ▶ If the display message does not disappear, consult a qualified specialist workshop immediately. Drive carefully.
 Inoperative See Operator's Manual (ESP®)	* ESP® is malfunctioning. Other driving systems and driving safety systems (e.g. BAS) may also be malfunctioning. The brake system will continue to operate normally. Braking distance may increase in an emergency braking situation.

Display messages	Possible causes/consequences and ▶ Solutions
	⚠ **WARNING** Risk of skidding if ESP® is malfunctioning If ESP® is malfunctioning, ESP® cannot carry out vehicle stabilization. In addition, other driving safety systems are switched off. ▶ Drive on carefully. ▶ Have ESP® checked at a qualified specialist workshop. ▶ Drive on carefully. ▶ Consult a qualified specialist workshop immediately.
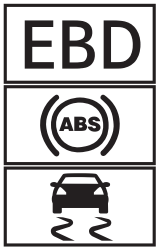 Inoperative See Operator's Manual (EBD, ABS and ESP®)	* EBD, ABS and ESP® are malfunctioning. Other driving systems and driving safety systems (e.g. BAS) may also be malfunctioning. ⚠ **WARNING** Risk of skidding if EBD, ABS and ESP® are malfunctioning The wheels may block during braking and ESP® does not perform any vehicle stabilization. The steerability and braking characteristics are heavily impaired and the braking distance may increase. In addition, other driving safety systems are switched off. ▶ Drive on carefully. ▶ Have the brake system checked immediately at a qualified specialist workshop. ▶ Drive on carefully.

Display messages	Possible causes/consequences and ▶ Solutions
	▶ Consult a qualified specialist workshop immediately.
HOLD Off	* The HOLD function is deactivated because the vehicle is slipping or a condition for activation is not fulfilled. ▶ Reactivate the HOLD function later or check the activation conditions for the HOLD function (→ page 312).
Restricted Mode Activated Drive Power Reduced	* The valet service mode is activated. Vehicle acceleration is restricted (→ page 314). * The beginner driver mode is activated. Vehicle acceleration is restricted (→ page 314).
ATTENTION ASSIST: Take a Break!	* ATTENTION ASSIST has detected fatigue or an increasing lack of concentration on the part of the driver (→ page 315). ▶ If necessary, take a break.
- - - mph	* Cruise control cannot be activated as not all activation conditions are fulfilled. ▶ Observe the activation conditions for cruise control (→ page 317).
Cruise Control Inoperative	* Cruise control is malfunctioning. ▶ Consult a qualified specialist workshop.

Display messages	Possible causes/consequences and ▶ Solutions
Cruise Control Off	* Cruise control has been deactivated. If there is an additional warning tone, cruise control has been deactivated automatically (→ page 316).
Traffic Sign Assist Currently Unavailable See Operator's Manual	* Traffic Sign Assist is temporarily unavailable. Once the cause of the problem is no longer present, the system will be available again. ▶ Continue driving in compliance with traffic regulations.
Traffic Sign Assist Inoperative	* Traffic Sign Assist is malfunctioning. ▶ Continue driving in compliance with traffic regulations. or ▶ Stop the vehicle in accordance with the traffic conditions and restart the vehicle. ▶ If the display message does not disappear: consult a qualified specialist workshop.
Malfunction Do Not Exceed 50 mph	* AMG RIDE CONTROL is malfunctioning. The vehicle's handling characteristics may be affected. AMG ACTIVE RIDE CONTROL is malfunctioning. The vehicle's handling characteristics may be affected. ▶ Do not drive at speeds greater than 50 mph (80 km/h). ▶ Consult a qualified specialist workshop.
AMG Ride Control Function Limited See Operator's Manual	* At least one of the main functions of AMG RIDE CONTROL is malfunctioning. At least one of the main functions of AMG ACTIVE RIDE CONTROL is malfunctioning. The system is outside the operating temperature range or the on-board electrical system voltage is too low.

Display messages	Possible causes/consequences and ▶ Solutions
	Once the cause of the problem is no longer present, the system will be available again. **NOTE** The vehicle's suspension and damping behavior is restricted. The vehicle body may tilt heavily to the side during cornering. ▶ Drive on carefully. ▶ Reduce speed considerably before taking a bend. ▶ Avoid sudden steering movements. ▶ Drive on carefully. ▶ Reduce speed considerably before taking a bend. ▶ Avoid sudden steering movements.
DSR Not in Curr. Drive Prog.	* DSR is not available in the currently selected drive program. ▶ Change the drive program.
DSR Inoperative	* DSR is malfunctioning. ▶ Consult a qualified specialist workshop.

Display messages	Possible causes/consequences and ▶ Solutions
 Do Not Exceed 25 mph	* The maximum speed of 25 mph (40 km/h) for DSR has been exceeded. ▶ Drive more slowly.
RACE START Not Possible See Operator's Manual	* Possible causes are: • The activation conditions have not been fulfilled (→ page 355).
RACE START Canceled	* Possible causes: • you released the accelerator pedal during RACE START. • you depressed the brake pedal during RACE START. ▶ You can try RACE START again at the next start.

Driver assistance systems

Display messages	Possible causes/consequences and ▶ Solutions
 - - - mph	* Active Distance Assist DISTRONIC cannot be activated as not all activation conditions are fulfilled. ▶ Comply with the activation conditions of Active Distance Assist DISTRONIC (→ page 321).

Display messages	Possible causes/consequences and ▶ Solutions
Suspended	* If you depress the accelerator pedal beyond the setting of Active Distance Assist DISTRONIC, the system will switch to passive mode (→ page 318).
Off	* Active Distance Assist DISTRONIC was deactivated. If a warning tone also sounds, Active Distance Assist DISTRONIC has deactivated automatically (→ page 321).
Active Distance Assist Currently Unavailable See Operator's Manual	* Active Distance Assist DISTRONIC is temporarily unavailable. The ambient conditions are outside the system limits (→ page 318). As soon as the ambient conditions are within the system limits, the system will become available again. ▶ Drive on carefully. or ▶ If the display message does not disappear, stop the vehicle in accordance with the traffic conditions and restart the vehicle.
Active Distance Assist Inoperative	* Active Distance Assist DISTRONIC is malfunctioning. Other driving systems and driving safety systems may also be malfunctioning. ▶ Drive on carefully.

Display messages	Possible causes/consequences and ▶ Solutions
	or ▶ Stop the vehicle in accordance with the traffic conditions and restart the vehicle. ▶ If the display message does not disappear: consult a qualified specialist workshop.
Active Distance Assist Now Available	* Active Distance Assist DISTRONIC is operational again. ▶ Switch on Active Distance Assist DISTRONIC (→ page 321).
Active Brake Assist Functions Currently Limited See Operator's Manual	* For vehicles with the Driving Assistance Package, the following functions may be temporarily unavailable or only partially available: • Active Brake Assist with cross-traffic function • Evasive Steering Assist • PRE-SAFE® PLUS **Vehicles with Blind Spot Assist:** PRE-SAFE® PLUS is temporarily unavailable. The ambient conditions are outside the system limits (→ page 337). **Vehicles without the Driving Assistance Package:** Active Brake Assist is temporarily unavailable. ▶ Drive on carefully. As soon as the ambient conditions are within the system limits, the system will become available again. or ▶ If the display message does not disappear, stop the vehicle in accordance with the traffic conditions and restart the vehicle.

Display messages	Possible causes/consequences and ▶ Solutions
Active Brake Assist Functions Limited See Operator's Manual	* For vehicles with the Driving Assistance Package, the following functions may be temporarily unavailable or only partially available: • Active Brake Assist with cross-traffic function • Evasive Steering Assist • PRE-SAFE® PLUS **Vehicles without the Driving Assistance Package:** Active Brake Assist is temporarily unavailable or only partially available. ▶ Drive on carefully. or ▶ Stop the vehicle in accordance with the traffic conditions and restart the vehicle. ▶ If the display message does not disappear: consult a qualified specialist workshop.
Active Steering Assist Currently Unavailable See Operator's Manual	* Active Steering Assist is temporarily unavailable. The ambient conditions are outside the system limits (→ page 329). As soon as the ambient conditions are within the system limits, the system will become available again. ▶ Drive on ▶ Check the tire pressure if necessary.
Active Steering Assist Inoperative	* Active Steering Assist is malfunctioning. Active Distance Assist DISTRONIC remains available. ▶ Drive on

Display messages	Possible causes/consequences and ▶ Solutions
	or ▶ Stop the vehicle in accordance with the traffic conditions and restart the vehicle. ▶ If the display message does not disappear: consult a qualified specialist workshop.
	* Active Steering Assist has reached the system limits (→ page 329). You have not steered independently for a considerable period of time. ▶ Take over the steering and drive on in accordance with the traffic conditions.
Active Steering Assist Currently Unavailable Due to Multiple Emergency Stops	* Active Steering Assist is temporarily unavailable due to several emergency stops having been performed. ▶ Take over the steering and stop in accordance with the traffic conditions. ▶ Switch the vehicle off and switch it back on Active Steering Assist is available once more.
 Initiating Emergency Stop	* Your hands are not on the steering wheel. Active Steering Assist will initiate an emergency stop (→ page 329). ▶ Put your hands on the steering wheel. Information on canceling an emergency stop (→ page 331).
Active Emergency Stop Assist Currently Unavailable See Operator's Manual	* Active Emergency Stop Assist is temporarily unavailable. The ambient conditions are outside the system limits (→ page 331). As soon as the ambient conditions are within the system limits, the system will become available again. ▶ Drive on

Display messages	Possible causes/consequences and ▶ Solutions
	or ▶ If the display message does not disappear, stop the vehicle in accordance with the traffic conditions and restart the vehicle. * **Vehicles without the Driving Assistance Package:** Active Emergency Stop Assist is temporarily unavailable due to multiple emergency stops. ▶ Take over the steering and stop in accordance with the traffic conditions. ▶ Switch the vehicle off and switch it back on. Active Emergency Stop Assist is available once more.
Active Emergency Stop Assist Inoperative	* Active Emergency Stop Assist is malfunctioning. ▶ Drive on or ▶ Stop the vehicle in accordance with the traffic conditions and restart the vehicle. ▶ If the display message does not disappear: consult a qualified specialist workshop.
Active Lane Change Assist Currently Unavailable See Operator's Manual	* Active Lane Change Assist is temporarily unavailable. The ambient conditions are outside the system limits (→ page 333). As soon as the ambient conditions are within the system limits, the system will become available again. ▶ Drive on. or

Display messages	Possible causes/consequences and ▶ Solutions
	▶ If the display message does not disappear, stop the vehicle in accordance with the traffic conditions and restart the vehicle.
Active Lane Change Assist Inoperative	* Active Lane Change Assist is malfunctioning. ▶ Drive on. or ▶ Stop the vehicle in accordance with the traffic conditions and restart the vehicle. ▶ If the display message does not disappear: consult a qualified specialist workshop.
Automatic Lane Change Currently Unavailable See Operator's Manual	* Active Lane Change Assist is temporarily unavailable. The ambient conditions are outside the system limits (→ page 333). As soon as the ambient conditions are within the system limits, the system will become available again. ▶ Drive on or ▶ If the display message does not disappear, stop the vehicle in accordance with the traffic conditions and restart the vehicle.
Automatic Lane Change Inoperative	* Active Lane Change Assist is malfunctioning. ▶ Drive on or ▶ Stop the vehicle in accordance with the traffic conditions and restart the vehicle. ▶ If the display message does not disappear: consult a qualified specialist workshop.

Display messages	Possible causes/consequences and ▶ Solutions
Active Stop & Go Assist Currently Unavailable See Operator's Manual	* Active Stop-and-Go Assist is temporarily unavailable. Active Distance Assist DISTRONIC and Active Steering Assist are still available. The ambient conditions are outside the system limits (→ page 318). As soon as the ambient conditions are within the system limits, the system will become available again. ▶ Drive on.
Active Stop & Go Assist Inoperative See Operator's Manual	* Active Stop-and-Go Assist is malfunctioning. Active Stop-and-Go Assist has been deactivated. Active Distance Assist DISTRONIC and Active Steering Assist are still available. ▶ Drive on. or ▶ Stop the vehicle in accordance with the traffic conditions and restart the vehicle. ▶ If the display message does not disappear: consult a qualified specialist workshop.
Blind Spot Assist Currently Unavailable See Operator's Manual	* Blind Spot Assist is temporarily unavailable. The system limits have been reached (→ page 347). Once the cause of the problem is no longer present, the system will be available again. ▶ Drive on. or ▶ If the display message does not disappear, stop the vehicle in accordance with the traffic conditions and restart the vehicle.

Display messages	Possible causes/consequences and ▶ Solutions
Blind Spot Assist Inoperative	* Blind Spot Assist or the exit warning is malfunctioning. ▶ Drive on. or ▶ Stop the vehicle in accordance with the traffic conditions and restart the vehicle. ▶ If the display message does not disappear: consult a qualified specialist workshop.
Blind Spot Assist Not Available When Towing Trailer See Operator's Manual	* When you establish the electrical connection to the trailer, Blind Spot Assist will be unavailable. ▶ Press the left-hand Touch Control and acknowledge the display message.
Active Blind Spot Assist Currently Unavailable See Operator's Manual	* Active Blind Spot Assist is temporarily unavailable. The system limits have been reached (→ page 347). Once the cause of the problem is no longer present, the system will be available again. ▶ Drive on. or ▶ If the display message does not disappear, stop the vehicle in accordance with the traffic conditions and restart the vehicle.
Active Blind Spot Assist Inoperative	* Active Blind Spot Assist or the exit warning is malfunctioning. ▶ Drive on. or ▶ Stop the vehicle in accordance with the traffic conditions and restart the vehicle.

Display messages	Possible causes/consequences and ▶ Solutions
	▶ If the display message does not disappear: consult a qualified specialist workshop.
Active Blind Spot Assist Not Available When Towing Trailer See Operator's Manual	* When you establish the electrical connection to the trailer, Active Blind Spot Assist will be unavailable. ▶ Press the left-hand Touch Control and acknowledge the display message.
Active Lane Keeping Assist Currently Unavailable See Operator's Manual	* Active Lane Keeping Assist is temporarily unavailable. The ambient conditions are outside the system limits (→ page 350). As soon as the ambient conditions are within the system limits, the system will become available again. ▶ Drive on
Active Lane Keeping Assist Inoperative	* Active Lane Keeping Assist is malfunctioning. ▶ Drive on or ▶ Stop the vehicle in accordance with the traffic conditions and restart the vehicle. ▶ If the display message does not disappear: consult a qualified specialist workshop.
Active Lane Keeping Assist Limited Range of Functions See Operator's Manual	* Active Lane Keeping Assist is available but restricted. ▶ Drive on or ▶ Stop the vehicle in accordance with the traffic conditions and restart the vehicle. ▶ If the display message does not disappear: consult a qualified specialist workshop.

Display messages	Possible causes/consequences and ▶ Solutions
 Initiating Emergency Stop	* Your hands are not on the steering wheel. The Active Lane Keeping Assist will initiate an emergency stop (→ page 350). ▶ Put your hands on the steering wheel. Information on canceling an emergency stop (→ page 331).
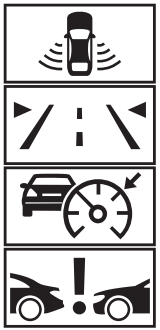 Temporarily Unavailable Sensors Dirty	* Front and corner radar sensors (hereafter "sensors") are malfunctioning. Possible causes are: • The sensors are dirty • Heavy rain or snow • Extended country driving without other traffic, e.g. in the desert Driving systems and driving safety systems may be malfunctioning or temporarily unavailable. The brake system, steering and drive system will continue to function normally. ▶ Drive on carefully. Once the causes of the problem are no longer present, the driving systems and driving safety systems will be available again and the corresponding symbols will be switched off. If the display message does not disappear: ▶ Stop the vehicle in accordance with the traffic conditions. ▶ Clean all sensor covers from outside (→ page 303). ▶ Restart the vehicle.

Display messages	Possible causes/consequences and ▶ Solutions
 Camera View Reduced See Operator's Manual	* The view of the multifunction camera is restricted. Possible causes are: • Dirt on the windshield in the field of vision of the multifunction camera • Heavy rain, snow or fog • Fogging up of the windshield from inside or outside: in certain weather conditions, fog can form on the inside or outside of the windshield during cold times of year in particular. ⓘ This fog on the windshield will be removed automatically within a short time with the aid of a heater. The restriction is temporary. Driving systems and driving safety systems may be malfunctioning or temporarily unavailable. The brake system, steering and drive system will continue to function normally. ▶ Drive on carefully. ▶ In order to remove the fog from the outside, carry out a single wipe of the windshield (→ page 204). ▶ In order to remove the fog from the inside, press MAX (→ page 218). Once the causes of the problem are no longer present, the driving systems and driving safety systems will be available again and the corresponding symbols will be switched off. If the display message does not disappear after a longer drive of around 15 minutes: ▶ Stop the vehicle in accordance with the traffic conditions. ▶ Clean the windshield, especially in the position of the multifunction camera (→ page 303). ▶ Restart the vehicle.

Display messages	Possible causes/consequences and ▶ Solutions
Functions Limited When Towing Trailer	* When the trailer socket is occupied, some driving systems will be available only to a limited extent. ▶ Drive carefully if you are towing a trailer or have the bicycle rack mounted.
PRE-SAFE Inoperative See Operator's Manual	* The PRE-SAFE® functions are malfunctioning. ▶ Consult a qualified specialist workshop.
PRE-SAFE Pulse Side Inoperative See Operator's Manual	* The PRE-SAFE® Impulse Side system is malfunctioning or inoperative after having already been triggered. ▶ Consult a qualified specialist workshop.
PRE-SAFE PLUS Inoperative See Operator's Manual	* There is a malfunction in the PRE-SAFE® PLUS system. ▶ Drive on or

Display messages	Possible causes/consequences and ▶ Solutions
	▶ Stop the vehicle in accordance with the traffic conditions and restart the vehicle. ▶ If the display message does not disappear: consult a qualified specialist workshop.

Parking assistance systems

Display messages	Possible causes/consequences and ▶ Solutions
PARKTRONIC Inoperative See Operator's Manual	* Parking Assist PARKTRONIC is malfunctioning. Once the cause of the problem is no longer present, the system will be available again. ▶ Continue driving while paying attention to the vehicle's surroundings. or ▶ Stop the vehicle in accordance with the traffic conditions and restart the vehicle. ▶ If the display message still appears, consult a qualified specialist workshop.
PARKTRONIC and Maneuvering Assistance Unavailable at Rear When Towing Trailer	* If transport equipment, e.g. a trailer or bicycle rack, is attached to the trailer hitch and the electrical connection is correctly established, Parking Assist PARKTRONIC is not available when backing up. The rear maneuvering assistant is also unavailable in this situation. ▶ Press the left-hand Touch Control and acknowledge the display message.
Active Parking Assist and PARKTRONIC Inoperative See Operator's Manual	* Active Parking Assist and Parking Assist PARKTRONIC are malfunctioning. Once the cause of the problem is no longer present, the system will be available again. ▶ Continue driving while paying attention to the vehicle's surroundings.

Display messages	Possible causes/consequences and ▶ Solutions
	or ▶ Stop the vehicle in accordance with the traffic conditions and restart the vehicle. ▶ If the display message still appears, consult a qualified specialist workshop.
Active Parking Assist Limited Availability of Maneuvering Assistance See Operator's Manual	* Active Parking Assist's maneuvering assistant is temporarily unavailable or only partially available. ▶ Clean all sensors of the parking and camera system (→ page 570). ▶ If the display message still appears, consult a qualified specialist workshop.

Mercedes-Benz emergency call system

Display messages	Possible causes/consequences and ▶ Solutions
SOS Inoperative	* The Mercedes-Benz emergency call system is malfunctioning. The Mercedes me connect system is also malfunctioning. ▶ Consult a qualified specialist workshop.

Battery

Display messages	Possible causes/consequences and ▶ Solutions
12 V On-board Electrical System Service Required	* The 12 V on-board electrical system is malfunctioning. ▶ Consult a qualified specialist workshop immediately.
Stop Vehicle See Operator's Manual	* The 12 V battery is no longer being charged and the condition of charge is too low. **NOTE** Possible engine damage if you continue driving ▶ Do not continue driving under any circumstances. ▶ Consult a qualified specialist workshop. ▶ Stop the vehicle immediately in accordance with the traffic conditions. Do not continue driving under any circumstances. ▶ Switch off the vehicle. ▶ Consult a qualified specialist workshop.

Display messages	Possible causes/consequences and ▶ Solutions
Switch on vehicle to charge the 12 V battery	* The vehicle is off and the condition of charge of the 12 V battery is too low. ▶ Switch off electrical consumers that are not required. ▶ Drive for 30–60 mins. or ▶ Charge the 12 V battery when stationary (→ page 50). ▶ **Plug-in hybrid:** Charge the vehicle at a charging station (→ page 273).
Stop Vehicle To Charge the 12 V Battery Do Not Switch Off Vehicle	* The state of charge of the 12 V battery is too low. ▶ Stop the vehicle immediately in accordance with the traffic conditions. Do not continue driving. ▶ Leave the vehicle running ▶ If the display message disappears: drive on. ▶ If the display message does not disappear: consult a qualified specialist workshop.
Stop Vehicle See Operator's Manual	* The 48 V on-board electrical system is malfunctioning. ▶ Stop the vehicle immediately in accordance with the traffic conditions. Do not continue driving under any circumstances. ▶ Switch off the vehicle. ▶ Consult a qualified specialist workshop.

Display messages	Possible causes/consequences and ▶ Solutions
Battery Overheated Stop! Everyone Get Out! Outdoors if Possible	* The 48 V battery is overheating. There is a risk of fire. ▶ Stop the vehicle immediately in accordance with the traffic conditions. ▶ If possible, stop the vehicle in the open air and ensure that all vehicle occupants get out. ⓘ Supporting vehicle functions may activate automatically, e.g. air-recirculation mode as part of climate control. ▶ Do not continue driving. ▶ If smoke is present, leave the danger zone and call the fire service immediately. ▶ Consult a qualified specialist workshop even if there are no external signs of a fire.
48 V Battery See Operator's Manual	* The 48 V on-board electrical system has function restrictions. Comfort functions, such as the climate control system, may be restricted. It is possible to continue driving. ▶ If the display message remains active continuously, consult a qualified specialist workshop immediately.
Please Wait Charging 48 V Battery...	* The 48 V battery is discharged. You have switched on the vehicle while the 12 V battery was being charged with a suitable charger or while another vehicle was providing starting assistance. The discharged 48 V battery is charged automatically via the voltage converter. After a few minutes, the Starting Possible Again display message will be shown on the driver's display. ▶ Start the vehicle.

Display messages	Possible causes/consequences and ▶ Solutions
	▶ Drive the vehicle for a while to charge the 12 V battery and the 48 V battery after disconnecting the charger from the vehicle. If the Starting Possible Again display message does not appear after a few minutes: ▶ Try to start the vehicle. ▶ If the vehicle does not start, consult a qualified specialist workshop.
Starting Possible Again	* The 48 V battery has been charged automatically via the voltage converter. ▶ Start the vehicle and drive for a while to charge the 12 V battery and the 48 V battery.

Tire pressure monitor

Display messages	Possible causes/consequences and ▶ Solutions
Tire Pressure Monitor Currently Unavailable	* There is interference from a powerful radio signal source. As a result, no signals from the tire pressure sensor are being received. The tire pressure monitoring system is temporarily unavailable. The tire pressure monitoring system will restart automatically as soon as the cause has been rectified. ▶ Drive on.
Tire Pressure Monitor Inoperative	* The tire pressure monitoring system is malfunctioning.

Display messages	Possible causes/consequences and ▶ Solutions
	⚠ **WARNING** There is a risk of an accident if the tire pressure monitoring system is malfunctioning The tire pressure monitoring system cannot issue a warning if there is pressure loss in one or more of the tires. Tires with insufficient tire pressure may impair the driving characteristics as well as steering and braking. ▶ Have the tire pressure monitoring system checked at a qualified specialist workshop. ▶ Consult a qualified specialist workshop.
Tire Pressure Monitor Inoperative Tire Pressure Sensors Missing	* The wheels installed do not have suitable tire pressure sensors. The tire pressure monitoring system is deactivated. ▶ Install wheels with suitable tire pressure sensors.
 Wheel Sensor(s) Missing	* There is no signal from the tire pressure sensor in at least one wheel. No pressure value is displayed for the affected tire. ▶ Have the faulty tire pressure sensor replaced at a qualified specialist workshop.
 Check Tires	* The tire pressure in one or more tires has dropped significantly. The wheel position is displayed. A warning tone will also sound. ⚠ **WARNING** Risk of an accident due to insufficient tire pressure • The tires can burst.

Display messages	Possible causes/consequences and ▶ Solutions
	• The tires can wear excessively and/or unevenly. • The driving characteristics as well as the steering and braking may be greatly impaired. You could then lose control of the vehicle. ▶ Observe the recommended tire pressures. ▶ Adjust the tire pressure if necessary. ▶ Stop the vehicle in accordance with the traffic conditions. ▶ Check the tire pressure (→ page 601) and the tires.
 Please Correct Tire Pressure	* The tire pressure is too low in at least one of the tires, or the difference in tire pressure between the individual wheels is too great. ▶ Check the tire pressure and add air, if necessary. ▶ When the tire pressure is correct, restart the tire pressure monitor (→ page 606).
 Warning Tire Malfunction	* The pressure in one or more tires has dropped suddenly. The wheel position is displayed. ⚠ **WARNING** Risk of an accident from driving with a flat tire • The tires can overheat and be damaged. • The driving characteristics as well as the steering and braking characteristics may be greatly impaired.

Display messages	Possible causes/consequences and ▶ Solutions
	You could then lose control of the vehicle. ▶ Do not drive with a flat tire. ▶ Do not exceed the maximum permissible driving distance in emergency mode and the maximum permissible speed with a flat MOExtended tire. ▶ Observe the notes on flat tires. Notes on flat tires (→ page 52). ▶ Stop the vehicle in accordance with the traffic conditions. ▶ Check the tires.
 Tires Overheated	* At least one tire is overheating. The affected tires are displayed in red. At temperatures close to the limit value, the tires are displayed in yellow. ⚠ **WARNING** Risk of an accident from driving with overheated tires Overheated tires can burst. ▶ Reduce speed so that the tires cool down. ▶ Reduce your speed so that the tires cool down.

Display messages	Possible causes/consequences and ▶ Solutions
 Reduce Speed	* At least one tire is overheating. The affected tires are displayed in red. At temperatures close to the limit value, the tires are displayed in yellow. ⚠ **WARNING** Risk of an accident from driving with overheated tires Overheated tires can burst. ▶ Reduce speed so that the tires cool down. ▶ Reduce your speed so that the tires cool down.

Tire pressure loss warning system

Display messages	Possible causes/consequences and ▶ Solutions
Check Tire and Tire Pressure	* Canada only: The tire pressure loss warning system has detected a significant loss of pressure. ⚠ **WARNING** Risk of an accident due to insufficient tire pressure • The tires can burst. • The tires can wear excessively and/or unevenly. • The driving characteristics as well as the steering and braking may be greatly impaired.

Display messages	Possible causes/consequences and ▶ Solutions
	You could then lose control of the vehicle. ▶ Observe the recommended tire pressures. ▶ Adjust the tire pressure if necessary. ▶ Stop the vehicle in accordance with the traffic conditions. ▶ Check the tire pressure (→ page 601) and the tires. ▶ When the tire pressure is correct, restart the tire pressure loss warning system (→ page 607).
Check Tire Pressure Then Restart Run Flat Indicator	* Canada only: The tire pressure loss warning system generated a display message and has not been restarted since. ▶ When the tire pressure is correct, restart the tire pressure loss warning system (→ page 607).
Run Flat Indicator Inoperative	* Canada only: The tire pressure loss warning system is malfunctioning. ▶ Consult a qualified specialist workshop.

Engine oil

Display messages	Possible causes/consequences and ▶ Solutions
 Check Engine Oil Level At Next Refueling (Add 1 Quart)	* The engine oil level has dropped to the minimum level. **!** **NOTE** Engine damage caused by driving with insufficient engine oil ▶ Avoid long journeys with insufficient engine oil. ▶ When next refueling, add 1.1 US qt (1 l) of engine oil (→ page 561). Notes on engine oil (→ page 762).
 Engine Oil Level Reduce Oil Level	* The engine oil level is too high. **!** **NOTE** Engine damage caused by driving with excess engine oil ▶ Avoid long journeys with excess engine oil. ▶ Consult a qualified specialist workshop immediately and have the engine oil level reduced.
 Engine Oil Level Stop Switch Off Vehicle	* The engine oil level is too low. **!** **NOTE** Engine damage caused by driving with insufficient engine oil ▶ Avoid long journeys with insufficient engine oil. ▶ Stop the vehicle immediately in accordance with the traffic conditions. Do not continue driving.

Display messages	Possible causes/consequences and ▶ Solutions
	▶ Switch off the vehicle. ▶ Add 1.1 US qt (1 l) of engine oil (→ page 561). ▶ Check the engine oil level. Notes on engine oil (→ page 762).
 Engine Oil Pressure Stop Switch Off Vehicle	* The oil pressure is too low. **NOTE** Engine damage caused by driving with insufficient oil pressure ▶ Avoid driving with insufficient oil pressure. ▶ Stop the vehicle immediately in accordance with the traffic conditions. Do not continue driving. ▶ Switch off the vehicle. ▶ Consult a qualified specialist workshop.
 Engine Oil Level Cannot Be Measured	* The electrical connection to the oil level sensor has been interrupted or the oil level sensor is faulty. ▶ Consult a qualified specialist workshop.

Warning and indicator lamps

Overview of indicator and warning lamps

Some systems will perform a self-test when the vehicle is switched on. Some indicator and warning lamps may briefly light up or flash. This behavior is non-critical. These indicator and warning lamps indicate a malfunction only if they light up or flash after the vehicle has been started or during a journey.

The indicator and warning lamps are located in the highlighted display sections.

Driver display

Indicator and warning lamps

Occupant safety

- Restraint system (→ page 866)
- Seat belt (→ page 866)
- Occupant presence reminder (white) (→ page 866)
- Occupant presence reminder (yellow) (→ page 866)

Drive system

- Reduced power (→ page 868)
- System error (→ page 868)
- Electrical malfunction (→ page 868)

vehicle

- Power steering (yellow) (→ page 869)
- Power steering (red) (→ page 869)
- Rear-axle steering (yellow) (→ page 869)
- Rear-axle steering (red) (→ page 869)

Engine

- Coolant temperature (→ page 871)
- Engine diagnostics (→ page 871)
- Vehicles with gasoline engine: engine operating temperature (→ page 871)
- Engine operating temperature (Mercedes-AMG vehicles) (→ page 871)
- Electrical malfunction (→ page 871)
- Reserve fuel with fuel filler flap location indicator (→ page 871)

Brakes

- Electric parking brake (yellow) (→ page 875)
- PARK USA: electric parking brake (red) (→ page 875)
- Canada: electric parking brake (red) (→ page 875)
- RBS USA: Recuperative Brake System (→ page 875)
- Canada: brakes (yellow)(→ page 875)
- BRAKE USA: brakes (red) (→ page 875)
- Canada: brakes (red) (→ page 875)

Driving and driving safety systems

ABS (→ page 878)

ESP® (→ page 878)

ESP® OFF (→ page 878)

ESP® OFF (→ page 878)

ESP OFF ESP® OFF (→ page 878)

ESP SPORT ESP® SPORT (→ page 878)

ATTENTION ASSIST (→ page 878)

Traffic Sign Assist (→ page 878)

Distance warning (→ page 878)

Active Brake Assist (→ page 878)

Active Brake Assist (→ page 878)

Active Brake Assist (→ page 878)

AMG RIDE CONTROL (→ page 878)

AMG ACTIVE RIDE CONTROL (→ page 878)

Mercedes-Benz emergency call system

SOS NOT READY Mercedes-Benz emergency call system (→ page 884)

Tire pressure monitor

Tire pressure monitor (→ page 884)

Exterior lighting

Parking lamp (→ page 192)

Low beam (→ page 192)

High beam (→ page 193)

Turn signal lights (→ page 193)

Rear fog light (→ page 192)

Symbols on the central display

Drive Away Assist (→ page 376)

Rear cross traffic warning (→ page 377)

Close-range braking (→ page 378)

Occupant safety

Warning/indicator lamp	Possible causes/consequences and ▶ Solutions
 Restraint system warning lamp	* The restraint system red warning lamp is lit while the vehicle is on. The restraint system is malfunctioning (→ page 96). ⚠ **WARNING** Risk of injury due to malfunctions in the restraint system Components in the restraint system may be activated unintentionally or not deploy as planned in an accident. ▶ Have the restraint system checked and repaired immediately at a qualified specialist workshop. **Plug-in hybrid:** ⚠ **DANGER** Risk of death due to the restraint system malfunctioning Components in the restraint system may be activated unintentionally or not deploy as intended in an accident. In the event of an accident, the high-voltage on-board electrical system may not be deactivated as intended. You may receive an electric shock if you touch the damaged components of the high-voltage on-board electrical system. ▶ Have the restraint system checked and repaired immediately at a qualified specialist workshop. ▶ After an accident, switch off the vehicle immediately. ▶ Drive on carefully. ▶ Note the messages on the driver's display.

Warning/indicator lamp	Possible causes/consequences and ▶ Solutions
	▶ Consult a qualified specialist workshop immediately.
 Seat belt warning lamp flashes	* The red seat belt warning lamp flashes and an intermittent warning tone sounds. The driver or front passenger has not fastened his/her seat belt while the vehicle is in motion. ▶ Fasten your seat belt (→ page 96). There are objects on the front passenger seat. ▶ Remove the objects from the front passenger seat.
 Seat belt warning lamp lights up	* The red seat belt warning lamp lights up for six seconds once the vehicle has started. In addition, an intermittent warning tone may sound. The red seat belt warning lamp reminds the driver and front passenger to fasten their seat belts. ▶ Fasten your seat belt (→ page 96). If you have placed objects on the front passenger seat, the red seat belt warning lamp may remain lit.
  Occupant presence reminder warning lamp (white)	* The white occupant presence reminder warning lamp is lit. The occupant presence reminder is deactivated. ▶ Switch on the occupant presence reminder, see (→ page 126).

Warning/indicator lamp	Possible causes/consequences and ▶ Solutions
Occupant presence reminder warning lamp (yellow)	* The yellow occupant presence reminder warning lamp is lit. The occupant presence reminder is malfunctioning ▶ Note the messages on the driver's display.

Drive system

Warning/indicator lamp	Possible causes/consequences and ▶ Solutions
Reduced warning lamp power	* The yellow reduced-power warning lamp is on. Drive system power output is reduced. ▶ Note the messages on the driver's display.
System malfunction warning lamp	* The red system error warning lamp is lit while the vehicle is in a state of operational readiness READY. There is a malfunction in the drive system. ▶ Note the messages on the driver's display.

Warning/indicator lamp	Possible causes/consequences and ▶ Solutions
Electrical malfunction warning lamp	* The red electrical malfunction warning lamp is lit. There is a malfunction with the electrics. ▶ Note the messages on the driver's display.

Vehicle

Warning/indicator lamp	Possible causes/consequences and ▶ Solutions
Power steering warning lamp (yellow)	* The yellow power steering warning lamp is lit while the vehicle is running. The power assistance or the steering itself is malfunctioning. ▶ Note the messages on the driver's display.
Power steering warning lamp (red)	* The red power steering warning lamp is lit while the vehicle is running. The power assistance or the steering itself is malfunctioning. ⚠ **WARNING** Risk of accident if steering capability is impaired If the steering does not function as intended, the vehicle's operating safety is jeopardized.

Warning/indicator lamp	Possible causes/consequences and ▶ Solutions
	▶ Pull over and stop the vehicle safely as soon as possible, paying attention to road and traffic conditions. Do not continue driving under any circumstances. ▶ Consult a qualified specialist workshop. ▶ Note the messages on the driver's display.
 Rear axle steering warning lamp (yellow)	* The yellow rear axle steering warning lamp is lit while the vehicle is running. The rear axle steering is malfunctioning. ▶ Note the messages on the driver's display.
 Rear axle steering warning lamp (red)	* The red rear axle steering warning lamp is lit while the vehicle is running. The rear axle steering is malfunctioning. ⚠ **WARNING** Risk of accident if steering capability is impaired If the steering does not function as intended, the vehicle's operating safety is jeopardized. ▶ Pull over and stop the vehicle safely as soon as possible, paying attention to road and traffic conditions. Do not continue driving under any circumstances. ▶ Consult a qualified specialist workshop. ▶ Note the messages on the driver's display.

Engine

Warning/indicator lamp	Possible causes/consequences and ▶ Solutions
 Coolant warning lamp (red)	* The red coolant warning lamp is lit while the engine is running. Possible causes are: • The temperature sensor is malfunctioning • The coolant level is too low • The air supply to the radiator is obstructed • The radiator fan is faulty • The engine coolant pump is faulty If there is an additional warning tone, the coolant temperature has exceeded the maximum permissible temperature. ⚠ **WARNING** Risk of burns when opening the hood If you open the hood in the event of an overheated engine or fire in the engine compartment, the following situations may occur: • You may come into contact with hot gases. • You may come into contact with other escaping hot operating fluids. ▶ Before opening the hood, allow the engine to cool down. ▶ In the event of a fire in the engine compartment, keep the hood closed and call the fire service.

Warning/indicator lamp	Possible causes/consequences and ▶ Solutions
	▶ Stop immediately in accordance with the traffic conditions and switch off the vehicle. Do not continue driving. ▶ Note the messages on the driver's display. **If the coolant temperature display is at the lower end of the temperature scale:** ▶ Consult a qualified specialist workshop. **If the coolant temperature display is at the upper end of the temperature scale:** ▶ Exit the vehicle and keep a safe distance from it until the engine has cooled down. ▶ Check the coolant level (→ page 563). ▶ Make sure that the air supply to the radiator is not obstructed. ▶ Avoiding high loads on the engine, drive to the nearest qualified specialist workshop. In doing so, ensure that the coolant temperature display remains below the red area.
 Coolant warning lamp (yellow)	* The yellow coolant warning lamp is lit while the engine is running. Possible causes are: • The temperature sensor is malfunctioning • The charge air, transmission oil or battery cooling is faulty • The radiator shutters are blocked or defective ▶ Avoiding high loads on the engine, drive to the nearest qualified specialist workshop.

Warning/indicator lamp	Possible causes/consequences and ▶ Solutions
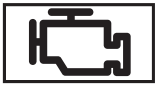 Check Engine warning lamp	* The yellow Check Engine warning lamp is lit while the engine is running. A malfunction has occurred in the engine, the exhaust system or the fuel system. The emissions limit value may have been exceeded and the engine may be running in emergency operation mode. In some states, legal requirements stipulate that you must immediately consult a qualified specialist workshop as soon as the yellow Check Engine warning lamp lights up. ▶ Have the vehicle checked as soon as possible at a qualified specialist workshop.
Electrical malfunction warning lamp	* The red electrical malfunction warning lamp is lit. There is a malfunction in the electrics. ▶ Note the messages on the driver's display.
Engine operating temperature warning lamp	*The blue warning lamp for engine operating temperature will remain lit until the engine operating temperature has been reached. The engine output and engine torque will remain reduced until then. ▶ Take this into consideration in your driving style.

Warning/indicator lamp	Possible causes/consequences and ▶ Solutions
Engine operating temperature warning lamp	* **Vehicles with a gasoline engine:** after a cold start, the blue engine operating temperature warning lamp is on. Engine output and engine torque are reduced. ▶ Take this into consideration in your driving style.
Fuel reserve warning lamp flashes	* The yellow fuel reserve warning lamp lights up while you are driving. There has been pressure loss in the fuel system. The fuel filler cap is not closed correctly or the fuel system is leaking. ▶ Close the fuel filler cap. If the fuel filler cap has already been closed correctly: ▶ Consult a qualified specialist workshop.
Fuel reserve warning lamp lights up	* The yellow fuel reserve warning lamp lights up while the engine is running. The fuel supply has dropped into the reserve range. ▶ Refuel.

Brakes

Warning/indicator lamp	Possible causes/consequences and ▶ Solutions
PARK Electric parking brake indicator lamp (red) (USA only) Electric parking brake indicator lamp (red) (Canada only) Electric parking brake indicator lamp (yellow)	* The red electric parking brake indicator lamp flashes or is lit. The yellow electric parking brake indicator lamp is also lit in the event of a malfunction. ▶ Note the messages on the driver's display.

Warning/indicator lamp	Possible causes/consequences and ▶ Solutions
RBS RBS warning lamp (USA only) Brakes warning lamp (yellow) (Canada only)	*The yellow RBS warning lamp (USA only) or the yellow (!) brake warning lamp (Canada only) is lit while the vehicle is running. **⚠ WARNING** Risk of an accident due to a brake system malfunction If the brake system is malfunctioning, braking characteristics may be impaired. ▶ Drive on carefully. ▶ Have the brake system checked immediately at a qualified specialist workshop. The Hill Start Assist may be malfunctioning. ▶ Adjust your speed and drive on carefully, leaving a suitable distance to the vehicle in front. ▶ If the driver's display shows a display message, observe it. ▶ Consult a qualified specialist workshop.

Warning/indicator lamp	Possible causes/consequences and ▶ Solutions
BRAKE Brakes warning lamp (USA only) Brakes warning lamp (Canada only)	* The red brake warning lamp is lit while the vehicle is running. Possible causes are: • The brake force boosting is malfunctioning and the braking characteristics may be affected. • There is insufficient brake fluid in the brake fluid reservoir. ▶ Note the messages on the driver's display. ⚠ **WARNING** Risk of accident and injury if brake force boosting is malfunctioning If brake force boosting is malfunctioning, increased brake pedal force may be necessary for braking. The braking characteristics may be impaired. The braking distance can increase in emergency braking situations. ▶ Stop in a safe location immediately. Do not continue driving. ▶ Consult a qualified specialist workshop. ⚠ **WARNING** Risk of an accident due to low brake fluid level If the brake fluid level is too low, the braking effect and the braking characteristics may be impaired. ▶ Pull over and stop the vehicle safely as soon as possible, paying attention to road and traffic conditions. Do not continue driving under any circumstances. ▶ Consult a qualified specialist workshop. ▶ Do not add brake fluid.

Driving and driving safety systems

Warning/indicator lamp	Possible causes/consequences and ▶ Solutions
 ABS warning lamp	* The yellow ABS warning lamp is lit while the vehicle is running. ABS is malfunctioning. If an additional warning tone sounds, EBD is malfunctioning. Other driving systems and driving safety systems may also be malfunctioning. ▶ Note the messages on the driver's display. ⚠ **WARNING** There is a risk of skidding if EBD or ABS is malfunctioning The wheels may lock during braking. The steerability and braking characteristics are heavily impaired and the braking distance may increase. In addition, other driving safety systems are switched off. ▶ Drive on carefully. ▶ Have the brake system checked immediately at a qualified specialist workshop. ▶ Drive on carefully. ▶ Consult a qualified specialist workshop.

Warning/indicator lamp	Possible causes/consequences and ▶ Solutions
 ESP® warning lamp flashes	* The yellow ESP® warning lamp flashes while the vehicle is in motion. One or more wheels have reached their grip limit (→ page 306). One or more wheels have reached their grip limit (→ page 307). ▶ Adapt your driving style to suit the road and weather conditions.
 ESP® warning lamp lights up	* The yellow ESP® warning lamp is lit while the vehicle is running. ESP® is malfunctioning. Other driving systems and driving safety systems (e.g. BAS) may also be malfunctioning. ▶ Note the messages on the driver's display. ⚠ **WARNING** Risk of skidding if ESP® is malfunctioning If ESP® is malfunctioning, ESP® cannot carry out vehicle stabilization. In addition, other driving safety systems are switched off. ▶ Drive on carefully. ▶ Have ESP® checked at a qualified specialist workshop. ▶ Drive on carefully. ▶ Consult a qualified specialist workshop immediately.

Warning/indicator lamp	Possible causes/consequences and ▶ Solutions
 ESP® OFF warning lamp	* The yellow ESP® OFF warning lamp is lit while the vehicle is running. ESP® is deactivated. Other driving systems and driving safety systems may also be inoperative. ⚠ **WARNING** Risk of skidding when driving with ESP® deactivated ESP® does not act to stabilize the vehicle. The availability of further driving safety systems is also limited. ▶ Drive on carefully. ▶ Deactivate ESP® only for as long as the situation requires. If ESP® cannot be activated, ESP® is malfunctioning. ▶ Have ESP® checked immediately at a qualified specialist workshop. ▶ Observe the notes on deactivating ESP® (→ page 306).
	* The yellow ESP® OFF warning lamps are lit while the vehicle is running. ESP® is deactivated. Other driving systems and driving safety systems may also be inoperative. ⚠ **WARNING** Risk of skidding when driving with ESP® deactivated ESP® does not act to stabilize the vehicle. The availability of further driving safety systems is also limited.

Warning/indicator lamp	Possible causes/consequences and ▶ Solutions
	▶ Drive on carefully. ▶ Deactivate ESP® only for as long as the situation requires. If ESP® cannot be activated, ESP® is malfunctioning. ▶ Have ESP® checked immediately at a qualified specialist workshop. ▶ Observe the notes on deactivating ESP® (→ page 307).
OFF ESP SPORT	* ESP® SPORT is activated while the vehicle is running. When ESP® SPORT is activated, ESP® will stabilize the vehicle only to a limited extent. ⚠ **WARNING** Risk of skidding if ESP® SPORT is used incorrectly When you activate ESP® SPORT, there is an increased risk of skidding and having an accident. ▶ Activate ESP® SPORT only in the circumstances described below. ▶ Observe the notes on activating ESP® SPORT(→ page 307).
OFF ATTENTION ASSIST warning lamp	* The ATTENTION ASSIST warning lamp is lit. ATTENTION ASSIST is malfunctioning. ▶ Consult a qualified specialist workshop.

Warning/indicator lamp	Possible causes/consequences and ▶ Solutions
Traffic Sign Assist warning lamp	* The Traffic Sign Assist warning lamp is lit. Traffic Sign Assist is malfunctioning. ▶ Note the messages on the driver's display.
Distance warning lamp	* The red distance warning lamp lights up while the vehicle is in motion. The distance to the vehicle in front is too small for the speed selected. If there is an additional warning tone, you are approaching an obstacle at too high a speed. ▶ Be prepared to brake immediately. ▶ Increase the distance. Function of Active Brake Assist (→ page 337).
Active Brake Assist warning lamp	* The Active Brake Assist warning lamp is on. Due to dirty sensors or a malfunction, the system is not available or the range of functions is restricted. ▶ Note the messages on the driver's display.

Warning/indicator lamp	Possible causes/consequences and ▶ Solutions
Active Brake Assist warning lamp	* The Active Brake Assist warning lamp is on. The system is switched off or the range of functions has been automatically restricted. This may be the case if the driver is not wearing a seat belt or another driving system has been activated. ▶ Observe the notes on Active Brake Assist (→ page 337).
Active Brake Assist warning lamp	* The Active Brake Assist warning lamp is on. After you drive off, the system's range of functions will be restricted due to the teach-in process. Depending on the ambient conditions, the teach-in process may take a few minutes. ▶ Observe the notes on Active Brake Assist (→ page 337).
Suspension warning lamp (yellow)	* The yellow AMG RIDE CONTROL warning lamp is lit. There is a malfunction in the AMG RIDE CONTROL. ▶ Note the messages on the driver display.
Suspension warning lamp (yellow)	* The yellow AMG ACTIVE RIDE CONTROL warning lamp is lit. There is a malfunction in the AMG ACTIVE RIDE CONTROL. ▶ Note the messages on the driver display.

Mercedes-Benz emergency call system

Warning/indicator lamp	Possible causes/consequences and ▶ Solutions
SOS NOT READY Mercedes-Benz emergency call system warning lamp	*The Mercedes-Benz emergency call system is malfunctioning. The Mercedes me connect system is also malfunctioning. ▶ Consult a qualified specialist workshop.

Tire pressure monitor

Warning/indicator lamp	Possible causes/consequences and ▶ Solutions
Tire pressure monitoring system warning lamp flashes	*The yellow tire pressure monitor warning lamp (pressure loss/malfunction) flashes for approximately one minute and then remains lit. The tire pressure monitoring system is malfunctioning. ⚠ **WARNING** There is a risk of an accident if the tire pressure monitoring system is malfunctioning The tire pressure monitoring system cannot issue a warning if there is pressure loss in one or more of the tires. Tires with insufficient tire pressure may impair the driving characteristics as well as steering and braking. ▶ Have the tire pressure monitoring system checked at a qualified specialist workshop.

Warning/indicator lamp	Possible causes/consequences and ▶ Solutions
	▶ Consult a qualified specialist workshop.
 Tire pressure monitoring system warning lamp lights up	* The yellow tire pressure monitoring system warning lamp (pressure loss/malfunction) is lit. The tire pressure monitoring system has detected tire pressure loss in at least one of the tires. ⚠ **WARNING** Risk of an accident due to insufficient tire pressure • The tires can burst. • The tires can wear excessively and/or unevenly. • The driving characteristics as well as the steering and braking may be greatly impaired. You could then lose control of the vehicle. ▶ Observe the recommended tire pressures. ▶ Adjust the tire pressure if necessary. ▶ Stop the vehicle in accordance with the traffic conditions. ▶ Check the tire pressure and the tires.

1, 2, 3 ...

(SmartKey) battery 129
4MATIC 270
48 V on-board electrical system
- Displays in the driver's display 408
- Operating safety 79

A

A/C function
- Activating/deactivating (MBUX) 216
- Activating/deactivating (operating unit) 215

ABS 305
Acceleration
- Kickdown 269
- Optimized acceleration 236

Accelerator pedal 252
Access data
- Setting (Bluetooth®) 533

Accident prevention 376
Accident, emergency call 58, 529
Activating/deactivating the acoustic locking verification signal 128
Activation
- Toll system 497

Active Blind Spot Assist
- Activating/deactivating 350
- Brake application 349
- Exit warning 347
- Function 347
- Trailer operation 349

Active Brake Assist
- Function 337
- Setting 342

Active Distance Assist DISTRONIC
- Activating/deactivating 321
- Active Emergency Stop Assist 331
- Active Lane Change Assist 333
- Active Speed Limit Assist 324
- Calling up a speed 321
- Function 318
- Increasing/decreasing the speed 321
- Route-based speed adaptation 325
- Storing a speed 321

Active Emergency Stop Assist 331
Active headlamps 195
Active Lane Change Assist
- Activating/deactivating 336
- Function 333

Active Lane Keeping Assist
- Activating/deactivating 353
- Function 350
- Setting the sensitivity 353
- Towing a trailer 350

Active light function 195
Active Parking Assist
- Automatic braking function 376
- Cross traffic warning 377
- Drive Away Assist 376
- Exiting a parking space 374
- Function 369
- Maneuvering brake function 378
- Memory Parking Assist 379
- Parking 371
- Pausing 375

Active Service System PLUS 556
Active Speed Limit Assist 324
Active Steering Assist
- Activating/deactivating 331

Active Emergency Stop Assist..... 331
Active Lane Change Assist..... 333
Function..... 329

Active Stop-and-Go Assist..... 327

Adaptive cruise control..... 325

Adaptive Highbeam Assist
Activating/deactivating..... 199

Adaptive Highbeam Assist Plus
Activating/deactivating..... 201

Additives
Engine oil..... 762
Fuel..... 761

Adjusting bass, mid-range and treble settings
Advanced sound system..... 555
Burmester® 3D surround sound system..... 553

Adjusting mid-range, treble and bass settings
Advanced sound system..... 555
Burmester® 3D surround sound system..... 553

Adjusting the balance/fader
Advanced sound system..... 555
Burmester® 3D surround sound system..... 554

Adjusting the sound focus
Burmester® 3D surround sound system..... 554

Adjusting treble, mid-range and bass settings
Advanced sound system..... 555
Burmester® 3D surround sound system..... 553

Advanced sound system
Adjusting the balance/fader..... 555
Adjusting treble, mid-range and bass settings..... 555
Calling up the sound menu..... 555
Information..... 555
Switching loudness normalization on/off..... 555

After-sales service..... 556

Air bag
Inflating..... 104
Overview..... 110
PASSENGER AIR BAG indicator lamp..... 98
Warning lamp..... 96

Air conditioning menu
Air distribution..... 217
Climate control..... 216
Fragrance system..... 219
Ionization..... 218
Rear passenger compartment climate control..... 217

Air distribution
Adjusting..... 213, 217
Overview..... 217
Setting..... 212

Air freshener system..... 219

Air inlet..... 565

Air pressure..... 601

Air vents
Adjusting..... 225

Air/water duct..... 565

Airflow
Adjusting..... 213
Setting..... 212

Alarm system..... 149

All-wheel drive..... 270
Alternative route..... 468, 475
Ambient lighting..... 202
AMG ACTIVE RIDE CONTROL
Function..... 354
AMG adaptive sport suspension system
Suspension..... 353
AMG ceramic high-performance compo-
site brake system..... 243
AMG DYNAMIC SELECT
Setting drive programs..... 260
AMG Performance
Information..... 21
AMG Real Performance Sound..... 252
AMG RIDE CONTROL
Selecting the suspension setting..... 354
AMG steering wheel buttons
Setting..... 253
AMG steering-wheel buttons
Function..... 253
AMG TRACK PACE
Boost Strategy..... 356
Configuring..... 455
Drag Race..... 454
Function..... 452
Telemetry display..... 455
Track Race..... 452
Android Auto
Connecting a mobile phone (wired)..... 518
Connecting a mobile phone (wireless).... 519
Ending..... 519
Information..... 518
Sound settings..... 519
Transferred vehicle data..... 520
Android smartphone..... 517
Angle of approach/departure..... 769, 770
Animals..... 106
Anti-collision
Drive Away Assist..... 376
Anti-lock braking system..... 305
Anti-theft alarm system..... 149
Anti-theft protection
Immobilizer..... 149
Anticipatory operating-mode strategy,
Route-based..... 251
Apple CarPlay®, Smartphone
Connecting an iPhone® (cable)..... 516
Connecting an iPhone® (wireless)..... 516
Ending..... 517
Notes..... 516
Overview..... 515
Sound settings..... 517
Transferred vehicle data..... 520
Apps, Mercedes me
Mercedes me calls..... 521
Mercedes me connect..... 524
Selecting (MBUX multimedia system)..... 527
Assistance system..... 304
Assistant display
Menu (driver display)..... 401
ASSYST PLUS
Battery disconnection periods..... 557
Service interval display..... 556
Service requirements..... 556
ATA
Deactivating the alarm..... 150
Function..... 149
Interior protection..... 151
Interior protection function..... 150

Tow-away alarm function..... 150
Tow-away protection..... 150
ATTENTION ASSIST
Function..... 315
Setting..... 316
Attention assistant..... 315
Augmented reality
MBUX route guidance..... 488
Authorization
Setting..... 445
Authorized Mercedes-Benz Service Center..... 84
Authorized workshop..... 84
Automatic car wash..... 30, 566
Automatic car wash mode..... 567
Automatic climate control..... 216
Automatic distance control..... 318
Automatic driving lights..... 193
Automatic emergency call..... 529
Automatic engine start/stop..... 243
Automatic front passenger air bag shutoff
Function..... 100
Information (child restraint system on the front passenger seat)..... 115
PASSENGER AIR BAG indicator lamp..... 98
Automatic Lane Change
Active Lane Change Assist..... 333
Automatic measures after an accident..... 103
Automatic mirror folding function..... 211
Automatic seat adjustment..... 161
Automatic transmission
DIRECT SELECT lever..... 261
Drive programs..... 254, 255
DYNAMIC SELECT button..... 254, 255
Engages neutral..... 263
Engaging drive position..... 266
Engaging reverse gear..... 263
Kickdown..... 269
Manual gear shifting..... 266, 267
Oil temperature (driver's display).... 402, 403
Selecting park position..... 264
Steering wheel paddle shifters..... 266, 267
Switching gears..... 261
Transmission position display..... 261
Transmission positions..... 261
Autonomous braking..... 337
Axle load
Towing a trailer..... 775

B

Bag hook..... 182
Ball neck
Installing..... 388
BAS..... 306
Basic information..... 93
Battery
High-voltage battery..... 586
Battery (12 V battery)
Charging..... 50, 588
Notes..... 583
Notes (starting assistance and charging)..... 586
Replacing..... 590
Starting assistance..... 50, 588
Battery (48 V)
Notes..... 585
Battery (high-voltage on-board electrical system)..... 772

Battery (starter battery)
charging, Remote Online..... 233
Battery operation..... 227
Beginner driver mode
Activating/deactivating..... 314
Function..... 314
Belt
Fastening..... 96
Notes on wearing correctly..... 95
Releasing..... 109
To adjust the height..... 96
Bicycle rack
Load capacity..... 774
Blind Spot Assist
Activating/deactivating..... 350
Function..... 347
Bluetooth®
Activating/deactivating..... 445
Connecting a mobile phone..... 11, 505
Information..... 445
Setting up an Internet connection..... 533
Boost pressure, current (driver's display)
..... 402, 403
Boost Strategy
Activating/deactivating (steering-wheel button)..... 357
Function..... 356
Brake Assist
Active Brake Assist..... 337
Brake Assist System..... 306
Brake Assist System..... 306
Brake disks..... 235
Brake fluid..... 763
Brake force distribution..... 312
Brake pads..... 235
Brakes
ABS (Anti-lock Braking System)..... 305
Active Brake Assist..... 337
AMG ceramic high-performance composite brake system..... 243
BAS (Brake Assist System)..... 306
Driving tips..... 237
EBD (Electronic Brakeforce Distribution)..... 312
Electric parking brake..... 298
Handbrake..... 298
HOLD function..... 312
Limited braking effect (salt-treated roads)..... 237
New/replaced brake pads/brake discs.. 235
Notes on breaking in a new vehicle..... 235
Parking brake..... 298
Post-collision brake..... 103, 104
Recuperation..... 247
Braking assistance
Active Brake Assist..... 337
Brake Assist System..... 306
Breakdown
Changing a wheel..... 624
Flat tire..... 52, 576
Overview of aids..... 72
Tow-starting..... 596
Towing methods..... 54, 592
Transporting the vehicle..... 594
Breakdown (Roadside Assistance)..... 78
Burmester® 3D surround sound system, Tone
Adjusting the balance/fader..... 554
Adjusting the sound focus..... 554
Adjusting treble, mid-range and bass settings..... 553

Automatic loudness normalization..... 553
Calling up the sound menu..... 553
Information..... 553
Selecting the sound profile..... 554

C

Call list
Deleting..... 513
Making a call..... 512
Overview..... 512
Selecting options..... 513

Calling the customer center for Mercedes-Benz..... 521

Calling up a web page..... 535

Calling up the sound menu
Advanced sound system..... 555
Burmester® 3D surround sound system..... 553

Calls, Telephone operation
Accepting..... 509
Activating functions during a call..... 509
Calls with several participants..... 509
Declining..... 509
Ending a call..... 509
Incoming call during an existing call..... 510
Making..... 509
Mercedes me..... 521
Telephone..... 509
Using overhead control panel..... 521
Using the international dialing code..... 510

Camera
360° camera..... 359
Activating using GPS (reversing camera)..... 365
Button..... 365
Care..... 570
Cleaning..... 570
Function..... 359
Information..... 303
Managing activation points..... 365
Off-road function..... 363
Opening the camera cover (rear view camera)..... 366
Rear view camera..... 357
Select view..... 365
Transparent hood..... 363

Car key..... 127

Car wash
Automatic car wash..... 30, 566
Automatic car wash mode..... 566
Power washer..... 568
Washing by hand..... 568

Car-to-X-Communication
Display on map..... 487
Overview..... 487
Sending hazard warnings..... 488

Care
Air/water duct..... 565
Automatic car wash..... 30, 566
Automatic car wash mode..... 566
Camera..... 570
Decorative foil..... 569
Display..... 572
Exterior lighting..... 570
Genuine wood/trim elements..... 572
Head-up display..... 572
Headliner..... 572
Paint..... 569
Plastic trim..... 572
Power washer..... 568
Running boards..... 570
Seat belts..... 572
Steering wheel..... 572
Trailer hitch..... 570

Vehicle interior..... 572
Vehicle parts..... 570
Vehicle socket for the high-voltage battery..... 570
Washing by hand..... 568
Wheels/rims..... 570

Cargo compartment cover
Extending/retracting..... 180
Removing/installing..... 181

Caring for plastic trim..... 572

Caring for rims..... 570

Central display
Operating..... 429

Central locking system
Button..... 132
SmartKey..... 128

Change of address..... 78

Change of ownership..... 78

Changing a wheel
Preparation..... 624
Raising the vehicle..... 625

Charge level display..... 290

Charge level/charge display..... 290

Charging
12 V battery..... 50, 588
At time of departure..... 457
Charge level display..... 290
Charging cable control panel..... 280
Charging station, mode 3..... 278
Configuring weekly profile..... 457
Emergency release of the socket flap..... 289
Ending the charging process (alternating current, mode 2/3)..... 284
Ending the charging process (direct current, mode 4)..... 288
Indicator lamps on vehicle socket..... 281
Mains socket, mode 2..... 277
Maximum charging current (mains socket)..... 279
Notes on charging the high-voltage battery..... 273
Notes on the high-voltage battery..... 586
Rapid charging station, mode 4..... 278
Recuperation..... 247
Starting the charging process (alternating current, mode 2/3)..... 282
Starting the charging process (direct current, mode 4)..... 286
Stowing the charging cable..... 275
USB port..... 39, 173, 188
Wallbox, mode 3..... 278
Wirelessly charging a mobile phone..... 189

Charging cable
Control panel..... 280
Stowing..... 275

Charging process
Paying..... 469

Charging settings..... 457

Checking the coolant level..... 563

Child safety lock
Rear door..... 123
Side windows (rear passenger compartment)..... 124

Child seat
Adjusting the vehicle seat..... 117
Basic instructions..... 111
Front passenger seat..... 115
Installing ISOFIX..... 120
Rearward-facing..... 117
Risks/dangers..... 113
Securing on the rear seat with the seat belt..... 122

Securing to the front passenger seat with the seat belt..... 122
The most important information in brief..... 111
Top Tether..... 121

Children
Avoiding dangers in the vehicle..... 113
Basic instructions..... 111
Special seat belt retractor..... 119

Chock..... 53, 623

Classic menu display content
Selecting..... 395, 398

Clean varnish..... 569

Cleaning
Air/water duct..... 565
Automatic car wash..... 30, 566
Automatic car wash mode..... 566
Camera..... 570
Decorative foil..... 569
Genuine wood/trim elements..... 572
Paint..... 569
Power washer..... 568
Sensors..... 570
Vehicle interior..... 572
Vehicle parts..... 570
Vehicle socket for the high-voltage battery..... 570
Washing by hand..... 568

Cleaning carpets..... 572

Cleaning seat covers..... 572

Climate control, Air conditioning system
Activating/deactivating..... 214
Activating/deactivating (rear operating unit)..... 215
Activating/deactivating the A/C function (control panel)..... 215
Activating/deactivating the A/C function (MBUX)..... 216
Air distribution..... 212, 213
Air distribution settings..... 217
Air vents (front)..... 225
Air vents (rear passenger compartment)..... 225
Airflow..... 212, 213
Automatic control..... 216
Automatically controlling (rear operating unit)..... 216
Coolant and PAG oil filling capacity (Mercedes-AMG vehicle)..... 766
Defrosting a window..... 215
Defrosting the windshield..... 212
Defrosting windows..... 218
Demisting the windshield..... 213
Filling capacity for refrigerant and PAG oil..... 766
Fragrance system..... 219
Immediate pre-entry climate control..... 224
Inserting/removing the flacon (fragrance system)..... 219
Ionization..... 218
Notes..... 212
Operating unit..... 212, 213
Pre-entry climate control for departure time..... 222
Pre-entry climate control when the vehicle is unlocked..... 221
Rear passenger compartment operating unit..... 213
Rear window defroster..... 212
Rear window heating..... 213
Refrigerant..... 765
Resetting the climate control settings..... 56
Residual heat..... 218
Switching air-recirculation mode on/off..... 218

Synchronization function..... 217
Temperature..... 212, 213
Ventilation with comfort opening..... 143
Windshield heater..... 220

Climate control settings
Resetting..... 56

COC papers, CERTIFICATE OF CONFORMITY..... 635

Cockpit
Instrument panel..... 60, 62

Coffee cup symbol..... 315

Collapsible spare wheel
Inflating..... 632
Notes..... 631, 632

Collision detection (parked vehicle)
Setting..... 301, 302

Combination switch
Lights..... 193
Windshield wipers..... 204

Comfort
Information..... 20

Communication module
Disconnecting automatically from the Internet..... 532
Setting up an Internet connection..... 532

Commuter route..... 468, 476

Compass..... 493

Components relevant to radio regulation
Declaration of conformity..... 83

Connection status
Displaying..... 535
Overview..... 535

Contacts, Address book, Phone book
Calling up..... 511
Deleting..... 512
Importing..... 511
Importing (overview)..... 511
Information..... 510
Making a call..... 512
Name format..... 511
Note about suggestions..... 508
Options..... 512
Selecting options for suggestions..... 508
Storing..... 511

Control element (MBUX multimedia system)
Setting acoustic feedback..... 429

Control elements:..... 76

Convenience closing feature..... 144

Convenience opening..... 143

Coolant
Capacity..... 764
Filling capacity (Mercedes-AMG vehicles)..... 764
Notes..... 763

Cooling..... 212, 213

Copyright
License..... 92

Copyrights
Trademarks..... 92

Correct use..... 85

Cover..... 145

Cross traffic (warning)..... 377

Crosswind Assist..... 309

Cruise control
Activating/deactivating..... 317

Calling up a speed..... 317
Function..... 316
Requirements:..... 317
Setting a speed..... 317
Storing a speed..... 317

Cup holder..... 184, 186

Customer Assistance Center (CAC)..... 86

D

Damage
Limited protection..... 106

Dashcam
Configuring settings..... 502
Selecting a USB device..... 501
Starting/stopping an individual recording..... 502
Starting/stopping loop recording..... 501

Data processing in the vehicle..... 87

Data protection
Granting authorization..... 445

Data protection rights..... 90

Data storage
Data protection rights..... 90
Electronic control units..... 87
Event Data Recorder..... 91
MBUX multimedia system/Mercedes me connect..... 91
Online services..... 90

Daytime running lamps, Daytime running lamp mode
Activating/deactivating..... 201

Deactivating the alarm..... 150

Dealership..... 84

Declaration of conformity
Components relevant to radio regulation.. 83

Decorative foil..... 569

Definitions
Tires and loading..... 618

Defrost function..... 215

Deployed components
Limited protection..... 106

Deployment situations..... 104

Destination
Editing a suggestion..... 484
Editing intermediate destinations..... 474
Editing the previous destinations..... 483
Saving as a favorite..... 483

Destination entry
Accepting a destination suggestion..... 463
Entering a 3 word address..... 466
Entering an intermediate destination..... 474
Entering geo-coordinates..... 465
Selecting a contact..... 465
Selecting a received destination..... 467
Selecting from favorites..... 467
Selecting from the map..... 466
Selecting previous destinations..... 464

Destination entry (multimedia system)
Notes..... 462
Selecting a POI..... 464

Detecting inattentiveness..... 315

Diagnostics connection..... 83

DIGITAL LIGHT
Activating/deactivating..... 197
Active headlamps..... 195
Adaptive Highbeam Assist..... 198
Adaptive Highbeam Assist Plus..... 199
Assistance functions..... 195
Dynamic low beam..... 195
Overview..... 195

Topographical compensation..... 195
Digital Operator's Manual..... 74
Dinghy towing
Pulling/towing..... 391
Direct commands
Voice commands for MBUX voice assistant..... 418
DIRECT SELECT lever
Automatic transmission..... 261
Engages neutral..... 263
Engaging drive position..... 266
Engaging park position automatically..... 264
Engaging reverse gear..... 263
Function..... 261
Gearshift recommendation..... 269
Manual gearshifting..... 266, 267
Selecting park position..... 264
Display
Care..... 572
Display (driver's display)
Overview of displays..... 409, 410
Display (MBUX multimedia system)
Settings..... 408, 443
Display message
Calling up on driver display..... 777
Notes..... 777
Display messages
--- mph..... 838
--- mph..... 835
12 V On-board Electrical System Service Required..... 853
48 V Battery See Operator's Manual..... 855
Acoustic Presence Indicator Inoperative..... 801
Add Washer Fluid..... 817
ATTENTION ASSIST: Take a Break!..... 835
Automatic Driving Lights Inoperative..... 789
Battery Overheated Stop! Everyone Get Out! Outdoors if Possible..... 804, 855
BRAKE Brake Immediately..... 829
Brake Light Left..... 796
Brake Light Right..... 796
Camera View Reduced See Operator's Manual..... 849
Center Brake Light..... 796
Charger Cable Connected..... 801
BRAKE Check Brake Fluid Level..... 830
Check Coolant Level See Operator's Manual..... 818
Check Engine Oil Level At Next Refueling (Add 1 Quart)..... 862
Check Left Cornering Light..... 793
Check Left Daytime Running Light..... 793
Check Left High Beam..... 792
Check Left Low Beam..... 792
Check Right Cornering Light..... 794
Check Right Daytime Running Light..... 793

Check Right High Beam..... 793
Check Right Low Beam..... 792
Check Tires..... 857
Coolant Stop Switch Off Vehicle... 819
Currently Not Available Charge High-voltage Battery..... 800
Currently Not Available Charging of the High-voltage Battery Not Completed..... 799
Currently Unavailable See Operator's Manual (ABS and ESP®)..... 831
Currently Unavailable See Operator's Manual (ESP®)..... 833
Do Not Exceed 25 mph..... 838
Do Not Leave People or Animals in the Vehicle..... 786
Don't Forget Your Key..... 788
Drive Power and Range Reduced See Operator's Manual..... 806
Engine Oil Level Cannot Be Measured..... 863
Engine Oil Level Reduce Oil Level..... 862
Engine Oil Level Stop Switch Off Vehicle..... 862
Engine Oil Pressure Stop Switch Off Vehicle..... 863
Front Left Malfunction Service Required..... 779
Front Right Malfunction Service Required..... 780
Fuel Filler Cap Open..... 820
Fuel Reserve..... 819
Fuel Tank Is Depressurized Ready for Refueling..... 808
Functions Limited When Towing Trailer..... 850
Have High-Voltage System Checked See Operator's Manual..... 805
Initializing Key Please Wait..... 788
Initiating Emergency Stop..... 842, 848
Inoperative See Operator's Manual (ABS and ESP®)..... 832
EBD Inoperative See Operator's Manual (EBD, ABS and ESP®)..... 834
Inoperative See Operator's Manual (ESP®)..... 833
SOS Inoperative..... 852
Inoperative..... 837
Key Not Detected (red display message)..... 787
Key Not Detected (white display message)..... 787
Left Window Airbag Malfunction Service Required..... 783
License Plate Light..... 798
Malfunction Do Not Exceed 50 mph..... 836

BRAKE Malfunction See Operator's Manual..... 829
Malfunction See Operator's Manual..... 789
Malfunction Service Required..... 805
BRAKE Malfunction Stop..... 830
Malfunction..... 807
Malfunction..... 804
DSR Not in Curr. Drive Prog..... 837
Obtain a New Key..... 786
Off..... 839
HOLD Off..... 835
PARK Parking Brake See Operator's Manual..... 825
Parking Light Front Left..... 791
Parking Light Front Right..... 792
Performance Extremely Limited.... 808
Please Correct Tire Pressure..... 858
Please Wait Charging 48 V Battery..... 855
Please Wait Depressurizing Fuel Tank..... 808
Pre-entry Climate Control Available Again via SmartKey after Vehicle Start..... 800
Pre-entry Climate Control via SmartKey Currently Not Available. High-voltage Battery Low..... 800
Rear Axle Steering Currently Malfunctioning..... 814
Rear Axle Steering Malfunction Service Required..... 814
Rear Axle Steering Malfunction Stop Immediately..... 814
Rear Fog Light..... 797
Rear Left Backrest Not Latched.... 816
Rear Right Backrest Not Latched..... 817
Reduce Speed..... 860
PARK Release Parking Brake..... 828
Replace Key Battery..... 786
Restraint System Malfunction Service Required..... 778
Reversing Light..... 797
Right Window Airbag Malfunction Service Required..... 783
Second Row of Seats, Left Malfunction Service Required..... 781
Second Row of Seats, Right Malfunction Service Required..... 782
Steering Malfunction Drive Carefully Service Required..... 812
Steering Malfunction Increased Physical Effort See Operator's Manual.... 813
Steering Malfunction Stop Immediately See Operator's Manual..... 813
Stop Switch Off Vehicle..... 807
Stop Vehicle See Operator's Manual..... 853

Stop Vehicle See Operator's Manual..... 854
Stop Vehicle To Charge the 12 V Battery Do Not Switch Off Vehicle..... 854
Suspended..... 839
Switch Off Lights..... 790
Switch On Headlights..... 789
Switch on vehicle to charge the 12 V battery..... 854
PARK Switch on Vehicle to Release the Parking Brake..... 828
Tail Light Left..... 797
Tail Light Right..... 797
Tank Ventilation Malfunction Service Required..... 809
Temporarily Unavailable Sensors Dirty..... 848
Tires Overheated..... 859
Towing Not Permitted See Operator's Manual..... 801
Trailer Brake Light..... 798
Trailer Tail Light..... 799
Trailer Turn Signal Indicator, Left.. 798
Trailer Turn Signal Indicator, Right..... 798
Turn Signal Indicator, Front Left.... 794
Turn Signal Indicator, Front Right..... 795
Turn Signal Indicator, Left Mirror.. 795
Turn Signal Indicator, Rear Left..... 794
Turn Signal Indicator, Rear Right... 795
Turn Signal Indicator, Right Mirror..... 796
Warning Tire Malfunction..... 858
Wheel Sensor(s) Missing..... 857
"Electric" Drive Program Currently Unavailable..... 803
4matic Currently Unavailable..... 817
4matic Inoperative..... 817
AC Charging Inoperative Service Required..... 802
Active Blind Spot Assist Currently Unavailable See Operator's Manual..... 846
Active Blind Spot Assist Inoperative..... 846
Active Blind Spot Assist Not Available When Towing Trailer See Operator's Manual..... 847
Active Brake Assist Functions Currently Limited See Operator's Manual..... 840
Active Brake Assist Functions Limited See Operator's Manual..... 841
Active Distance Assist Currently Unavailable See Operator's Manual..... 839
Active Distance Assist Inoperative..... 839
Active Distance Assist Now Available..... 840
Active Emergency Stop Assist Currently Unavailable See Operator's Manual..... 842

Active Emergency Stop Assist Inoperative..... 843
Active Lane Change Assist Currently Unavailable See Operator's Manual..... 843
Active Lane Change Assist Inoperative... 844
Active Lane Keeping Assist Currently Unavailable See Operator's Manual..... 847
Active Lane Keeping Assist Inoperative... 847
Active Lane Keeping Assist Limited Range of Functions See Operator's Manual..... 847
Active Parking Assist and PARKTRONIC Inoperative See Operator's Manual..... 851
Active Parking Assist Limited Availability of Maneuvering Assistance See Operator's Manual..... 852
Active Steering Assist Currently Unavailable Due to Multiple Emergency Stops..... 842
Active Steering Assist Currently Unavailable See Operator's Manual..... 841
Active Steering Assist Inoperative..... 841
Active Stop & Go Assist Currently Unavailable See Operator's Manual..... 845
Active Stop & Go Assist Inoperative See Operator's Manual..... 845
Adaptive Highbeam Assist Currently Unavailable See Operator's Manual..... 790
Adaptive Highbeam Assist Inoperative.... 790
Adaptive Highbeam Assist Plus Currently Unavailable See Operator's Manual..... 791
Adaptive Highbeam Assist Plus Inoperative..... 791
AMG Ride Control Function Limited See Operator's Manual..... 836
Authentication Failed Use Different Authentication Method or Charging Station..... 803
Automatic Lane Change Currently Unavailable See Operator's Manual..... 844
Automatic Lane Change Inoperative..... 844
Auxiliary Battery Malfunction (red display message)..... 824
Auxiliary Battery Malfunction (white display message)..... 824
Blind Spot Assist Currently Unavailable See Operator's Manual..... 845
Blind Spot Assist Inoperative..... 846
Blind Spot Assist Not Available When Towing Trailer See Operator's Manual..... 846
Cannot Start Vehicle See Operator's Manual..... 806, 810
Charging Fault Change Charging Mode See Operator's Manual..... 802
Check Brake Pads See Operator's Manual..... 831
Check Tire and Tire Pressure..... 860

Check Tire Pressure Then Restart Run Flat Indicator..... 861
Cruise Control Inoperative..... 835
Cruise Control Off..... 836
DC Charging Inoperative Service Required..... 802
Depress Brake to Shift from P..... 820
Depress Brake to Shift to D or R..... 821
Depress Brake to Shift to R..... 821
DIGITAL LIGHT Functions Limited..... 790
Do Not Restart Vehicle Service Required..... 805
Drive Malfunction Achievable Speed Limited Stop Soon..... 807
Drive Malfunction Achievable Speed Severely Limited See Operator's Manual..... 807
Front Passenger Airbag Disabled See Operator's Manual..... 783
Front Passenger Airbag Enabled See Operator's Manual..... 784
Hazard Warning Light Malfunction..... 791
Head-up Display Brightness Currently Reduced See Operator's Manual..... 812
Head-up Display Currently Unavailable See Operator's Manual..... 811
Head-up Display Inoperative..... 812
Indicator Lamp in Driver's Display Inoperative Service Required..... 799
N Automatically Activated Please Shift to Transmission Position Again..... 822
N is Engaged Shift to Desired Drive Range..... 823
Not Possible to Unlock Charging Cable See Operator's Manual..... 801
Occupant Presence Reminder Inoperative..... 785
Only Electric Drive Available Power Limited..... 803
PARKTRONIC and Maneuvering Assistance Unavailable at Rear When Towing Trailer..... 851
PARKTRONIC Inoperative See Operator's Manual..... 851
Place the Key in the Marked Space See Operator's Manual..... 788
PRE-SAFE Inoperative See Operator's Manual..... 850
PRE-SAFE PLUS Inoperative See Operator's Manual..... 850
PRE-SAFE Pulse Side Inoperative See Operator's Manual..... 850
Preparing Drive System..... 804
RACE START Canceled..... 838
RACE START Not Possible See Operator's Manual..... 838
Reduced Drive System Performance See Operator's Manual..... 804

Restricted Mode Activated Drive Power Reduced..... 835
Reversing Not Possible Service Required..... 823
Risk of Vehicle Rolling Away Apply Parking Brake When Parking..... 821
Risk of Vehicle Rolling Away Driver's Door Open Position P Not Selected..... 821
Risk of Vehicle Rolling Away N Activated Manually No Automatic Change to P..... 822
Run Flat Indicator Inoperative..... 861
Service Required Apply Parking Brake to Park..... 821
Service Required Do Not Change Transmission Position..... 805, 823
Shift to P Only When Vehicle Is Stationary..... 820
Snow Chain Mode Maximum Speed Exceeded..... 815
Starting Possible Again..... 856
Tire Pressure Monitor Currently Unavailable..... 856
Tire Pressure Monitor Inoperative..... 856
Tire Pressure Monitor Inoperative Tire Pressure Sensors Missing..... 857
To Deselect P or N Depress Brake and Start Vehicle..... 820
To shift to N, hold selector lever longer in N position..... 823
To Switch Off Vehicle Press and Hold Start/Stop Button for at Least 3 Seconds or Press 3 Times..... 818
Traffic Sign Assist Currently Unavailable See Operator's Manual..... 836
Traffic Sign Assist Inoperative..... 836
Transmission Malfunction Stop..... 823
Vehicle Currently Not Charging... Charging Station Fault..... 802
Vehicle Ready to Drive Shutdown Occurs When Locked or After a Few Minutes..... 811
Vehicle Ready to Drive Shutdown Occurs When Locked or Automatically in XX Mins..... 811
Windshield Wiper Malfunction..... 817

Displaying road names/house numbers..... 489
Distance control..... 318
Distance warning..... 337
DISTRONIC..... 318
Door
Child safety lock (rear door)..... 123
Emergency key..... 134
Opening (from the inside)..... 132
Unlocking (inside)..... 132
Door operating unit
Function seat..... 70
DOT, Tire Identification Number (TIN)..... 613
Downhill Speed Regulation..... 327
Drag Race..... 454

Drinking and driving..... 237
Drive Away Assist..... 376
Drive position..... 266
Drive program display..... 257, 258
Drive programs
AMG DYNAMIC SELECT..... 260
Selecting..... 257, 258
Driver display
Service menu..... 400
Track Pace menu..... 404
Driver's display, Instrument cluster
48 V on-board electrical system..... 408
Assistant display..... 401
Classic menu..... 395, 398
Head-up display..... 406
Menus..... 393
Navigation menu..... 405
Notes..... 392
Off-road menu..... 405
Operating..... 392
Service due date..... 556
Status displays..... 409, 410
Supersport menu..... 403
Understated menu..... 395, 398
Warning/indicator lamps..... 64, 864
Driver's seat
Adjusting (Seat Comfort)..... 153
Adjusting electrically..... 155
Easy entry and exit feature..... 166
Seat heating..... 162
Driving off-road..... 240
Driving safety system
ABS (Anti-lock Braking System)..... 305
Active Brake Assist..... 337
Active Lane Change Assist..... 333
Active Steering Assist..... 329
ATTENTION ASSIST..... 315
BAS (Brake Assist System)..... 306
Blind Spot Assist / Active Blind Spot Assist..... 347
Cameras..... 303
Cruise control..... 316
EBD (Electronic Brakeforce Distribution)..... 312
ESP® (Electronic Stability Program) 306, 307
Hill Start Assist..... 313
HOLD function..... 312
Off-road ABS..... 306
Overview..... 304
Radar and ultrasonic sensors..... 303
STEER CONTROL..... 312
Traffic Sign Assist..... 342
Trailer Maneuvering Assist..... 383
Your responsibility..... 303
Driving system..... 304
Driving tips
AMG ceramic high-performance composite brake system..... 243
Drinking and driving..... 237
General driving tips..... 237
Notes on breaking in a new vehicle..... 235
Off-road driving..... 240
Optimized acceleration..... 236
Rear axle steering..... 240
Recuperation..... 247
Drowsiness detection..... 315
DSR
Activating/deactivating..... 328
Changing the target speed..... 328
Function..... 327
Notes..... 327
Duplicate key..... 131

Dynamic handling control system..... 306
Dynamic low beam
Overview..... 195
DYNAMIC SELECT
Calling up the fuel consumption indicator..... 260
Configuring drive program I..... 259
Displaying engine data..... 260
Displaying vehicle data..... 260
Drive program display..... 257, 258
Drive programs..... 254, 255
Function..... 254, 255
Selecting the drive program..... 257, 258

E

E-mails..... 417
E10..... 759, 760
E25..... 760
Easy entry feature
Adjusting..... 168
Function..... 166
Easy exit feature
Adjusting..... 168
Function..... 166
EASY-PACK trunk box
Care..... 572
EBD, Electronic Brakeforce Distribution..... 312
ECO Assist
48 V on-board electrical system..... 246
Activating/deactivating..... 251
Plug-in hybrid..... 250
ECO display..... 245
ECO start/stop button
Automatic engine start/stop..... 244, 245
ECO start/stop function
Automatic engine start..... 243
Automatic engine stop..... 243
Conditions (automatic engine stop/start)..... 57
Function..... 243
Switching off/on..... 244, 245
Electric drive..... 227
Electric parking brake
Applying automatically..... 298
Emergency braking..... 301
Manually applying/releasing..... 300
Releasing automatically..... 299
Electrical fuses..... 51, 596
Electronic Stability Program..... 306, 307
Emergency
Emergency guide..... 58
First-aid kit (soft sided)..... 33, 49, 576
Overview of aids..... 72
Reflective safety vest..... 32, 48, 575
Warning triangle..... 576
Emergency braking
Active Brake Assist..... 337
Brake Assist System..... 306
Carrying out..... 301
Electric parking brake/handbrake..... 298
Emergency key
Door..... 134
Tailgate..... 141
Emergency operation mode
Starting the vehicle..... 232
Emergency release
Socket flap..... 289
Emergency shutoff (high-voltage on-board electrical system)..... 228
Emergency stop assistant..... 331

Emergency Tensioning Devices
Inflating..... 104
Energy flow display
Function/notes..... 458
Engine
Emergency operation mode..... 232
Emergency start..... 596
Engine number..... 756
Jump-starting..... 586
Parking (start/stop button)..... 290
Engine data
Displaying..... 260
DYNAMIC SELECT..... 260
Engine number..... 756
Engine oil, Oil
Additives..... 762
Capacity..... 762
Checking the oil level using the driver display..... 29, 561
MB-Freigabe or MB-Approval..... 762
Quality..... 762
Refilling..... 561
Temperature (driver's display)..... 402, 403
Engine oil temperature (driver's display)
..... 402, 403
Engine operating temperature
Warning lamp..... 235
Engine output..... 235
Engine output, current (driver's display)
..... 402, 403
Engine sound..... 252
Engine torque..... 235
Entering characters
Function/notes..... 441
Handwriting recognition..... 443
On the touchscreen..... 441
Selecting the writing speed..... 443
Setting the keyboard language..... 443
Environmentally friendly driving..... 75
ESC, Electronic Stability Control..... 306
ESP®
Activating/deactivating..... 310, 311
Crosswind Assist..... 309
ESP® SPORT..... 307
Function..... 306, 307
Setting (steering-wheel button)..... 310
Trailer stabilization..... 310
Event Data Recorder..... 91
Exit warning
Blind Spot Assist / Active Blind Spot Assist..... 347
Exiting a parking space
Active Parking Assist..... 369
Drive Away Assist..... 376
PARKTRONIC..... 366
Exterior lighting
Care..... 570
Exterior mirrors
Parking position..... 210

F

Factory settings
MBUX reset function..... 451
Favorites
Adding a destination..... 467
Calling up..... 435
Deleting..... 435
Home address..... 467
Moving..... 435
Renaming..... 435

Work address..... 467
Favourites
Overview..... 434
Film coverings
On camera/sensors..... 303
Fingerprint sensor
MBUX multimedia system..... 430
First aid
First-aid kit (soft sided)..... 33, 49, 576
First-aid kit (soft sided)..... 33, 49, 576
Fitting accessories
Limited protection..... 106
Flacon..... 219
Flat tire
Changing a wheel..... 624
MOExtended..... 577
Notes..... 52, 576
TIREFIT kit..... 579
Flat towing
Pulling/towing..... 391
Floor mats..... 191
Fog lamp..... 193
Foil covering
Radar and ultrasonic sensors..... 303
Fording water..... 769, 770
Fragrance..... 219
Fragrance system
Activating/deactivating..... 219
Adjusting..... 219
Inserting/removing the flacon..... 219
Perfume vial..... 219
Free software..... 92
Frequencies
Two-way radio..... 636
Front air bag
Inflating..... 104
Front headlamps..... 192
Front passenger air bag
Disabling/enabling..... 100
Front passenger air bag shutoff,
PASSENGER AIR BAG OFF
Information (child restraint system on the front passenger seat)..... 115
Front passenger seat
Adjusting (Seat Comfort)..... 153
Adjusting electrically..... 155
Fuel
Additives..... 761
Depressurize the fuel tank (plug-in hybrid with gasoline engine)..... 273
E10..... 759, 760
E25..... 760
Gasoline..... 759, 760
Gasoline quality..... 760
Quality (gasoline)..... 759
Refilling..... 23, 270
Reserve..... 761
Sulfur content..... 759, 760
Tank capacity..... 761
Fuel consumption indicator..... 260
Fuel reserve..... 761
Function in the event of an accident..... 105
Function seat..... 70
Fuses
Cargo compartment..... 599
Cockpit..... 598
Engine compartment..... 597
Fuse assignment diagram..... 51, 596
Notes..... 51, 596

Passenger footwell..... 599

G

G-meter, Accelerometer..... 402, 403
Gallery app
Operating..... 527
Garage door opener
Clearing the memory..... 297
Opening/closing a door..... 296
Problem..... 295
Garage door openers
Programming buttons..... 292
Synchronizing the rolling code..... 294
Gas station search
Starting automatic search..... 477
Switching the automatic search on/off... 477
Gasoline..... 759, 760
Gearshift
DIRECT SELECT lever..... 261
Manual..... 266, 267
General driving tips..... 237
Genuine parts..... 76
Glide mode..... 269, 270
Global search
Function..... 438
Overview..... 438
Glove box
Locking/unlocking..... 41, 175
Grab handles..... 152

H

Handbrake..... 298
Handling characteristics
Unusual..... 600
HANDS-FREE ACCESS..... 139
hands-free system..... 503
Handwriting recognition..... 443
Haptic accelerator pedal, Pressure point..... 252
Hazard warning lights..... 48, 194
Hazard warnings
Car-to-X-Communication..... 487
Head restraint
Adjusting (rear passenger compartment)..... 159
Adjusting manually (front, 4-way)..... 158
Removing/installing (rear passenger compartment)..... 160
Head-up display
Care..... 572
Function..... 406
Memory function..... 169
Operating..... 407
Switching on/off..... 408
Headlamp flashing..... 193
Headlamp range control..... 195
Headlamps..... 192
Heating
Activating/deactivating..... 214
Center console..... 213
Climate control..... 212, 213
Rear window..... 213
Seat..... 162
Steering wheel..... 166
Windshield..... 220
Help call
Mercedes-Benz emergency call system..... 58, 529
High beam..... 193

High-voltage battery
Charge level display 290
Charging at time of departure 457
Charging cable control panel 280
Charging duration 772
Charging station, mode 3 278
Configuring weekly profile 457
Ending the charging process (alternating current, mode 2/3) 284
Ending the charging process (direct current, mode 4) 288
Energy flow display 458
General notes on charging 273
Mains socket, mode 2 277
Maximum charging current (mains socket) 279
Notes 586
Range 772
Rapid charging station, mode 4 278
Recuperation 247
Starting the charging process (alternating current, mode 2/3) 282
Starting the charging process (direct current, mode 4) 286
Stowing the charging cable 275
Type 772
Wallbox, mode 3 278
High-voltage on-board electrical system
Indicator lamps on vehicle socket 281
Manual switch-off 228
Operating safety 79
Hill descent control 327
Hill Start Assist 313
HOLD function
Function 312
Switching on/off 312
Home screen
Central display 427
Hood
Opening/closing 558

I

Identification plate
Engine 756
Refrigerant 765
Vehicle 756
Images
Gallery app 527
Immediate pre-entry climate control 224
Immobilizer 149
Incorrect behavior by vehicle occupants
Limited protection 106
Indicator/warning lamps
Driver's display 864
PASSENGER AIR BAG 98
Individual drive program
Configuring 259
Inside rearview mirror 210
Installing
Snow chains 42, 601
Tires/wheels 627
Instrument panel
Cockpit 60, 62
Intelligent Light System
Activating/deactivating 197
Interior lighting
Adjusting 202
Ambient lighting 202
Switch-off delay time 203
Interior protection 151
Intermediate destination
Editing 474

Starting an automatic gas station search..... 477
Starting the automatic service station search..... 477

Internet
Calling up a web page..... 535
Calling up the web browser settings..... 537
Calling up web browser options..... 536
Deleting a bookmark..... 537
Deleting browser data..... 537
Managing bookmarks..... 537
Mercedes me connect..... 524
Setting up a Wi-Fi hotspot..... 446
Smartphone integration..... 21
Web browser..... 536
Web browser in the background..... 538

Internet connection
Canceling permission (mobile phone)..... 534
Disconnecting automatically (communication module)..... 532
Displaying the connection status..... 535
Establishing..... 534
Information..... 531
Overview of connection status..... 535
Restrictions..... 531
Setting access data (Bluetooth®)..... 533
Setting up (communication module)..... 532
Setting up (Wi-Fi)..... 533
Setup (Bluetooth®)..... 533

Ionization..... 218

iPhone®
Smartphone integration..... 515

ISOFIX child seat anchor
Installing..... 120

J

Jack
Storage location..... 53, 623

Jump-start connection..... 50, 588

K

Key
Problem..... 131
Replacement key..... 131

KEYLESS-GO
Deactivating..... 58, 128
Locking/unlocking the vehicle..... 132
Problem..... 133
Unlocking setting..... 128

Kickdown..... 269

Knee bag..... 110

L

Lane Change Assist..... 333

Lane Keeping Assist..... 350

Lane recognition
Active Lane Change Assist..... 333
Active Lane Keeping Assist..... 350

Language
Notes..... 447
Setting..... 447

License plate (front)..... 82

License plate assembly (front)..... 82

Light switch..... 192

Lighting
Dynamic low beam..... 195
Interior lighting..... 202

Lights
Active headlamps..... 195
Adaptive Highbeam Assist..... 198

Adaptive Highbeam Assist Plus..... 199
Assistance functions..... 195
Automatic driving lights..... 193
Combination switch..... 193
DIGITAL LIGHT..... 195
Dynamic low beam..... 195
Hazard warning lights..... 48, 194
High beam..... 193
Interior lighting..... 202
Locator lighting..... 202
Reading lamp..... 202
Rear fog light..... 193
Responsibility for lighting systems..... 192
Switch-off delay time..... 202
Switching on the daytime running lamps..... 201
Switching the Intelligent Light System on/off..... 197
Topographical compensation..... 195
Turn signals..... 193

Limited Warranty..... 87

Live Traffic Information
Displaying the traffic map..... 485
Displaying traffic incidents..... 485
Information from the service provider..... 484

Load capacity
Bicycle rack..... 774

Load index
Tires..... 615

Load-bearing capacity
Tires..... 615

Loading
Bag hook..... 182
Definitions..... 618
Notes..... 170
Roof luggage rack..... 36, 183
Tie-down eyes..... 39, 182

Loading guidelines..... 170

Loading information table..... 608

Loads..... 170

Locator lighting..... 202

Locking/unlocking
Automatic locking (MMS)..... 134
Doors (from the inside)..... 132
Emergency key..... 134
KEYLESS-GO..... 132

Loud sound
PRE-SAFE® Sound..... 102

Low-beam headlamps
Activating/deactivating..... 192

Lowered suspension
AMG ACTIVE RIDE CONTROL..... 354

Lubricants..... 757

Luggage..... 170

Luggage rack..... 170

Lumbar support..... 157

M

Maintaining safe distance
Active Distance Assist DISTRONIC..... 321

Maintaining the headliner..... 572

Maintaining the steering wheel..... 572

Maintenance
Vehicle..... 78

Maintenance Management
Notes..... 557
Transferred data..... 557

Malfunction
Restraint system..... 96

Malfunction message
Driver's display..... 777
Maneuvering
Drive Away Assist..... 376
Maneuvering brake function..... 378
Maneuvering assistant
Activating/deactivating..... 379
Cross traffic warning..... 377
Drive Away Assist..... 376
Maneuvering brake function..... 378
Maneuvering brake function..... 378
Maneuvering support..... 377
Manual gearshifting
Activating/deactivating..... 268
Map, Traffic map
Avoiding an area..... 491
Avoiding an area (overview)..... 491
Changing an area..... 491
Deleting an area..... 492
Displaying online map contents..... 495
Displaying the compass..... 493
Displaying the map version..... 491
Displaying the range..... 494
Displaying the satellite map..... 494
Displaying the traffic map..... 485
Displaying weather information..... 495
Map data..... 493
Moving..... 489
Route overview after start..... 490
Selecting additional information..... 490
Selecting POI symbols..... 490
Setting the map scale..... 489
Setting the map scale automatically..... 494
Updating..... 33, 492
Map functions..... 489
Massage programs..... 161, 162
Maximum full-stop braking..... 306
Maximum load rating..... 614
Maximum permissible load
Calculation example..... 609
Determining..... 609
Maximum tire pressure..... 615
MBUX
Dashcam..... 500
MBUX multimedia system
Activating/deactivating DSR..... 328
Activating/deactivating standby mode... 303
Adjusting the volume..... 440
Authorization..... 445
Calling up the zero layer..... 425
Configuring display settings..... 408
Display settings..... 443
Drive programs..... 259
ENERGIZING seat kinetics..... 459
Factory setting..... 451
Fingerprint sensor..... 430
Global search..... 438
Home screen..... 427
Language settings..... 412
Memory Park Assist..... 383
Mercedes me & Apps..... 22, 526
Operating the zero layer..... 425
Overview..... 420, 421
Set collision detection..... 301, 302
Setting keyboard and handwriting recognition..... 443
Setting route-based speed adaptation.... 326
Snow chain mode..... 601
Standby mode function..... 302
Steering wheel heater / seat heating..... 166
Switching the sound on/off..... 439
Touchscreen..... 429
Zero layer..... 422

MBUX Voice Assistant
E-mails.... 417
Function.... 412
Language setting.... 413
Media voice commands.... 416
Online voice commands.... 418
Online voice control.... 415
Operable functions.... 413
Operating safety.... 412
Setting.... 413
Speech quality.... 414
Voice commands.... 415
Voice prompting.... 412

Mechanical key
Inserting/removing.... 129

Media
General information.... 20

Media mode
Adding a favorite song.... 544
Connecting Bluetooth® audio equipment.... 543
Connecting USB devices.... 542
Controlling media playback.... 543
Copyright and trademarks.... 540
Notes about the search function in categories.... 544
Overview of the media menu.... 542
Playing back similar music tracks.... 544
Removing a favorite song.... 544
Starting a search in categories.... 544
Starting media playback.... 543
Supported formats and data storage media.... 539
Surprise mix.... 544
Using the keyword search.... 544

Medical aids.... 85

Memory function
Head-up display.... 169
Outside mirrors.... 169
Seat.... 169
Steering wheel.... 169

Memory Parking Assist
Exiting a parking space.... 382
Function.... 379
Parking.... 381
Recording.... 380
Setting.... 383

Menus (driver display)
Service.... 400
Track Pace.... 404

Menus (driver's display), Steering-wheel buttons
Assistant display.... 401
Classic menu.... 395, 398
Navigation.... 405
Notes.... 393
Off-road.... 405
Operating.... 394
Sport.... 402, 403
Supersport.... 403
Understated menu.... 395, 398

Mercedes me App
Activating on-demand features.... 77
Calling up services.... 526
Calling up your user account.... 526
Unlinking the user account.... 527

Mercedes me Apps.... 22, 526

Mercedes me calls
Arranging a service appointment.... 523

Calling the Mercedes-Benz customer center after automatic accident/breakdown detection..... 522
Calls via the overhead control panel..... 521
Information..... 521
Mercedes-Benz customer center..... 521
Transferred data..... 523

Mercedes me Charge, Paying
Charging station display..... 469

Mercedes me connect
Accident/Breakdown Management..... 525
Information..... 524
Transferred data..... 525

Mercedes-Benz emergency call system, Emergency call
Automatic emergency call..... 529
Data transfer..... 530
Information..... 528
Manual emergency call..... 530
Overview..... 58, 529

Mercedes-Benz GenuineParts..... 76

Message memory..... 777

Messages, Short messages
Calling a message sender..... 514
Deleting..... 515
Dictating..... 513
Forwarding..... 514
MBUX voice commands..... 417
Overview..... 513
Read-aloud function..... 513
Reading..... 513
Replying..... 514
Sending..... 513
Setting the displayed text messages..... 513
Using a phone number or URL..... 514

Mirror heater..... 221

Mirrors
Mirror folding function..... 211
Outside mirrors..... 208
Rearview mirror..... 210

Mobile phone
Canceling permission for Internet connection..... 534
Notes on wireless charging..... 189
Smartphone integration..... 21
Telephone..... 21
Wireless charging (front)..... 190

Model type..... 756

Modification
Limited protection..... 106

MOExtended tires, Run-flat tires..... 577

Multimedia system..... 420

Music online
Adding providers..... 545
Calling up..... 545
Calling up the settings..... 546
Requirements:..... 545
Search function..... 545

N

Navigation
Activating..... 460
Destination entry..... 34, 462
Displaying/hiding the menu..... 460
Information..... 17
MBUX voice commands..... 416
Menu (driver display)..... 405
Overview..... 461
Updating the map data..... 33, 492

Navigation announcements
Activating/deactivating..... 482
Repeating..... 483

Switching audio fadeout on/off..... 482
To adjust the volume..... 482
Neutral..... 263
Non-operational time
Activating/deactivating standby mode... 303
Notes on breaking in a new vehicle..... 235
Notifications Center
Calling up a notification..... 437
Editing a notification..... 437
Message types..... 435
Overview..... 435
Selecting actions..... 437

O

Objects in the vehicle interior
Limited protection..... 106
Occupant presence reminder
Activating/deactivating..... 126
Function..... 126
Occupant safety
Air bag..... 110
Basic information..... 93
Child seat..... 111
Information on the child restraint system..... 100
Information on the correct seat position... 94
Occupant presence reminder..... 126
Pets in the vehicle..... 106
PRE-SAFE®..... 102
Off-road..... 405
Off-road ABS..... 306
Off-road driving..... 240, 769, 770
Off-road menu
Overview..... 458
Setting..... 459
On-board diagnostics interface..... 83
On-board electronics
Two-way radios..... 635
On-demand feature..... 77
Online services..... 90
Open Source Software..... 92
Opening angle
Limiting (tailgate)..... 141
Opening the tailgate using your foot
HANDS-FREE ACCESS..... 139
Opening/closing a door..... 296
Opening/closing a garage door..... 296
Operating fluids
Additives..... 761
Brake fluid..... 763
coolant..... 763
Engine oil..... 762
Fuel (gasoline)..... 759
Gasoline..... 760
Notes..... 757
Refrigerant (air conditioning system)..... 765
Windshield washer fluid..... 43, 765
Operating safety
48 V on-board electrical system..... 79
High-voltage on-board electrical system... 79
Operator's Manual digital..... 74
Outside mirrors
Automatic anti-glare mode..... 210
Automatic mirror folding function..... 211
Blind Spot Assist / Active Blind Spot Assist..... 347
Folding in/out..... 208
Memory function..... 169
Setting..... 208

Warning lamp..... 347
Overhead control panel..... 68

P

Paddle shifters
Steering wheel paddle shifters..... 266, 267
Paint code..... 756
Panic alarm, Alarm
Activating/deactivating..... 128
Park position
DIRECT SELECT lever..... 261
Parking
Active Parking Assist..... 369
PARKTRONIC..... 366
Parking Assist
Active Parking Assist..... 369
Memory Parking Assist..... 379
PARKTRONIC..... 366
Parking Assist PARKTRONIC
Activating/deactivating..... 369
Adjusting warning tones..... 369
Function..... 366
Parking assistance systems
Active Parking Assist..... 369
Drive Away Assist..... 376
Maneuvering brake function..... 378
Memory Parking Assist..... 379
PARKTRONIC..... 366
Parking brake..... 298
Parking for an extended period..... 302
Parking lamps..... 192
Parking lights..... 192
Parking option
Displaying on the map..... 499
Selecting..... 499
Parking position
Exterior mirrors..... 210
Storing the front-passenger outside mirror using the memory button..... 56
Storing the position of the front-passenger outside mirror using reverse gear..... 211
Parking service
Displaying a parking option on the map.. 499
Selecting parking options..... 499
Parking space
Finding..... 498
PARKTRONIC..... 366
PASSENGER AIR BAG
Status display, front passenger air bag..... 98
Payload
Calculation example..... 609
Determining the maximum..... 609
Permitted towing methods
Overview..... 590, 591, 592
Pets in the vehicle..... 106
PIN protection
System PIN protection..... 447
Plug-in hybrid operation
Charging cable control panel..... 280
Charging the high-voltage battery at a rapid charging station (mode 4)..... 278
Ending the charging process (alternating current, mode 2/3)..... 284
Ending the charging process (direct current, mode 4)..... 288
Function of the recuperative brake system..... 247
Functions of the energy flow display..... 458

Haptic accelerator pedal..... 252
Indicator lamps on vehicle socket..... 281
Manually disconnecting the high-voltage on-board electrical system..... 228
Maximum charging current (mains socket)..... 279
Notes on charging (charging station, mode 3)..... 278
Notes on charging (mains socket, mode 2)..... 277
Notes on charging (wallbox, mode 3)..... 278
Notes on plug-in hybrid operation..... 227
Operating safety..... 79
Power meter..... 409
Route-based operating-mode strategy.... 251
Sets recuperation..... 248, 249
Starting the charging process (alternating current, mode 2/3)..... 282
Starting the charging process (direct current, mode 4)..... 286
Stowing the charging cable..... 275

POI
Selecting..... 464

POI symbols
Selecting..... 490

Post-collision brake..... 104

Power supply
Start/stop button..... 230
Switching on (start/stop button)..... 230

Power washer..... 568

Pre-entry climate control
activating/deactivating for departure time..... 223
At time of departure..... 222
For departure time..... 223
immediate..... 224
When vehicle is unlocked..... 221

Pre-heating..... 221

PRE-SAFE®, Anticipatory occupant protection
Function..... 102
PRE-SAFE® Sound..... 102
Reverting measures..... 102

PRE-SAFE® Impulse Side
Function..... 103
Inflating..... 104

PRE-SAFE® PLUS
Backing up measures..... 102
Function..... 102

Preventative occupant protection system..... 102

Previous destinations
Selecting..... 464

Programs..... 254, 255

Protection
Limited..... 106

Protection against collision
Maneuvering brake function..... 378

Protection of the environment
Driving style..... 75

Pulling away
Drive Away Assist..... 376
Hill Start Assist..... 313
Optimized acceleration..... 236

Q

QR code rescue card..... 49, 87

Qualified specialist workshop..... 84

R

RACE START
Activating..... 355
Activation conditions..... 355

Information..... 355

Racetrack mode
AMG ceramic high-performance composite brake system..... 243
AMG steering-wheel buttons..... 253

Radar and ultrasonic sensors..... 303

Radio
Activating..... 546
Activating/deactivating radio text..... 549
Calling up the station list..... 548
Deleting stations..... 548
Direct frequency entry..... 36, 548
Displaying emergency messages..... 548
Displaying emergency warnings..... 548
Displaying radio text..... 549
Editing station presets..... 548
Managing favorites..... 548
MBUX voice commands..... 416
Menu..... 19
Moving stations..... 548
Overview..... 546
Setting a channel..... 547
Setting the frequency band..... 547
Showing/hiding lyrics..... 549
Station search..... 36, 548
Station suggestion..... 548
Storing radio stations..... 548

Radio (multimedia system)
Switching the HD Radio function on/off..... 547

Radio regulations
Regulatory radio identification..... 637

Rain closing function
Sliding sunroof..... 147

Rain sensor
Sliding sunroof..... 147
Windshield wipers..... 204

Reading lamp
Interior lighting..... 202

Rear axle steering..... 240

Rear door (child safety lock)
Securing..... 123

Rear fog light..... 193

Rear passenger compartment climate control..... 217

Rear passenger compartment seat
Adjusting the backrest angle..... 179

Rear passenger compartment seat belt
Status display..... 98

Rear view camera
360° Camera..... 357
Function..... 357
Opening the camera cover..... 366

Rear window defroster..... 212

Rear window heating..... 213

Rear window wiper
Activating/deactivating..... 204
Automatically active..... 56
Replacing wiper blade..... 207

Rearview mirror
Automatic anti-glare mode..... 210

Rearward-facing child seat
Information..... 117

Recuperation
Function..... 247
Setting..... 248, 249

Reflective safety vest..... 32, 48, 575

Refrigerant..... 765

Refueling
depressurize the fuel tank (plug-in hybrid with gasoline engine)..... 273
Fuel..... 23, 270
Refueling the vehicle..... 23, 270

Registration
Toll system..... 497

Regulatory radio information
Specific absorption rate..... 754

Remote Online
Charging the starter battery..... 233
Cooling/heating the vehicle interior..... 233
Starting the vehicle..... 233

Replacement key..... 131

Reporting safety defects..... 86

Reserve
Fuel..... 761

Resetting
MBUX reset function..... 451

Residual heat..... 218

Responsibility
Driving safety systems..... 303

Restraint system
Basic information..... 93
Basic instructions for children..... 111
Deployment situations..... 104
Functionality..... 96
Information on function..... 105
Information on the correct seat position... 94
Limited protection..... 106
Malfunction..... 96
Protection..... 94
Self-test..... 96
Warning lamp..... 96

Reverse gear
DIRECT SELECT lever..... 261

Reversing camera
Activating via GPS..... 365
Managing activation points..... 365

Roadside Assistance (breakdown)..... 78

Rocking free..... 266

Roll away protection..... 312

Roller sunblind
Sliding sunroof..... 145

Roof load display
Information..... 257

Roof luggage rack
Loading..... 36, 183
Securing..... 36, 183

Route
Accepting a detour recommendation..... 471
Adjusting on the map..... 476
Alternative route..... 468, 475
Calculating..... 468
Calculating alternative routes..... 471
Commuter route..... 468, 476
Displaying destination information..... 473
Displaying the route list..... 474
Editing a stored route..... 478
Navigation..... 461
Planning..... 474
Range on Map service..... 470
Recording..... 478
Saving a recorded route..... 478
Selecting a type..... 471
Selecting notifications..... 473
Selecting options..... 472
Starting a saved route..... 478
Starting the automatic service station search..... 477

Switching the automatic gas station search on/off ... 477

Route guidance
Canceling ... 483
Changing direction ... 479
Destination reached ... 482
Freeway information ... 482
Lane recommendations ... 481
Notes ... 479
Off-road ... 483

Route guidance with augmented reality
Activating ... 489
Displaying road names/house numbers ... 489
Overview ... 488

Route-based operating-mode strategy
Function ... 251

Route-based speed adaptation
Function ... 325
Setting ... 326

Run-flat characteristics ... 577

Running boards
Care ... 570
Notes ... 136

S

Safety system ... 304

Satellite map ... 494

Satellite radio
Activating/deactivating TuneStart ... 552
Adding a channel to Smart Favorites ... 552
Deleting a channel ... 550
Displaying service information ... 552
Information ... 549
Information about Smart Favorites and TuneStart ... 551
Logging in ... 549
Moving a channel ... 550
Music and sport alerts function ... 551
Overview ... 550
Restrictions ... 549
Selecting a category ... 550
Selecting a channel ... 550
Setting music and sport alerts ... 551
Setting the parental control ... 551
Storing a channel ... 550
Switching on ... 550

Saving a destination suggestion as a favorite ... 484

Seat, Through-loading feature
Adjusting (Seat Comfort) ... 153
Adjusting electrically ... 155
Adjusting the angle of the backrests (rear passenger compartment) ... 179
Automatic adjustment ... 161
Configuring settings ... 160
Correct driver's seat position ... 152
ENERGIZING seat kinetics ... 459
Folding back the backrest (rear passenger compartment) ... 38, 177
Folding backrest forward (rear) ... 36, 176
Locking the backrest (rear passenger compartment) ... 178
Lumbar support ... 157
Massage programs ... 161
Memory function ... 169
Resetting settings (massage programs) ... 162
Settings ... 70
Side impact air bag ... 110
Workout programs ... 161

Seat belt
Automatic tightening ... 103
Rear passenger compartment seat belt status display ... 98

Warning lamp..... 97
Seat belt adjustment
Activating/deactivating..... 103
Function..... 103
Seat belt warning..... 97
Seat belts
Activating/deactivating seat belt adjustment..... 103
Care..... 572
Fastening..... 96
Notes on wearing correctly..... 95
Releasing..... 109
To adjust the height..... 96
Seat heating
Activating/deactivating..... 162
Seat kinetics
Setting..... 459
Seat ventilation
Activating/deactivating..... 163
Second telephone
Connecting..... 506
Selecting a gear..... 266, 267
Selecting a sound characteristic (steering-wheel button)..... 252
Selecting the sound profile
Burmester® 3D surround sound system..... 554
Selector lever..... 261
Self-test
Automatic front passenger air bag shu toff..... 98
Restraint system..... 96
Sensors
Cleaning..... 570
Information..... 303
Service
Menu (driver display)..... 400
Service center..... 84
Service due date..... 556
Service interval display..... 556
Service station search
Starting automatic search..... 477
Setting the date format..... 444
Setting the distance unit..... 447
Settings
Information..... 22
Shifting
Automatic transmission..... 266, 267
Gearshift recommendation..... 269
Manual..... 266, 267
Steering wheel paddle shifters..... 266, 267
Shortening the braking distance
Brake Assist System..... 306
Shunting assistant..... 383
Side impact air bag..... 110
Side windows
Child safety lock (rear passenger compartment)..... 124
Closing with SmartKey..... 144
Convenience closing feature..... 144
Convenience opening..... 143
Opening with the SmartKey..... 143
Opening/closing..... 142
Problem..... 144
Size designation
Tires..... 615
Skid chains..... 42, 601

Sliding sunroof, Panorama roof with power tilt/sliding panel
Automatic functions..... 147
Closing with SmartKey..... 144
Opening with the SmartKey..... 143
Opening/closing..... 145
Problem..... 148
Rain closing function..... 147

SmartKey
Acoustic locking verification signal..... 128
Battery..... 129
Deactivating a function..... 58, 128
Function..... 127
Key ring attachment..... 129
Mechanical key..... 129
Panic alarm..... 128
Power consumption..... 58, 128
Unlocking setting..... 128

Smartphone integration
Apple CarPlay®/Android Auto..... 21

Snow chain mode..... 601

Snow chains..... 42, 601

Socket
12 V..... 187
115 V (rear passenger compartment)..... 187

Socket flap..... 273

SOS button..... 521

Sound
AMG Real Performance Sound..... 252
PRE-SAFE® Sound..... 102
Wheels/tires..... 600

Sound settings
Adjusting treble, mid-range and bass settings..... 552
Automatic loudness normalization..... 552
Calling up the sound menu..... 552
Information..... 552
Setting the balance and fader..... 553

Spare parts..... 76

Spare wheel, Emergency spare wheel..... 630

Special seat belt retractor..... 119

Specialist workshop..... 84

Specific absorption rate (SAR)..... 754

Speed
Save, cruise control..... 321
Save, DISTRONIC..... 321

Speed adaptation, Route-based..... 325

Speed control
Active Distance Assist DISTRONIC..... 318
Cruise control..... 316

Speed rating
Tires..... 615

Start-off assist
Drive Away Assist..... 376
Hill Start Assist..... 313
Optimized acceleration..... 236

Start/stop button
Parking the vehicle..... 290
Starting the vehicle..... 231
Switching on the power supply / vehicle..... 230

Start/stop function..... 243

Starter battery
charging, Remote Online..... 233

Starting
Remote Online..... 233
Start/stop button..... 231

Starting assistance..... 50, 588

Starting the engine
Emergency operation mode..... 232
Remote Online..... 233
Start/stop button..... 231

Starting-off aid
Drive Away Assist..... 376
Hill Start Assist..... 313
Optimized acceleration..... 236

Station
Deleting..... 548
Direct frequency entry..... 36, 548
Managing favorites..... 548
Moving..... 548
Setting..... 547
Storing..... 548

Station list
Calling up..... 548

Station presets
Editing..... 548

Station search..... 36, 548

Station suggestion
Radio..... 548

Status display
Front passenger air bag..... 98
Rear passenger compartment seat belt.... 98

Steer Assist
Active Steering Assist..... 329
STEER CONTROL..... 312

STEER CONTROL..... 312

Steering
Rear axle steering..... 240

Steering wheel
Adjusting electrically..... 165
Driver's air bag..... 110
Manually adjusting..... 164
Memory function..... 169

Steering wheel adjustments..... 165

Steering wheel heating
Decoupling from the seat heating..... 166

Steering wheel paddle shifters..... 266, 267

Step..... 136

Stop and go
ECO start/stop function..... 244, 245

Stopping
Parking the vehicle..... 290

Stowage areas..... 39, 173

Stowage spaces
Armrest (front)..... 39, 173
Center console (front)..... 39, 173, 174
Door..... 39, 173
Glove box..... 39, 173

Streaming online music..... 545

Substances hazardous to health..... 79

Suggestions
Configuring..... 448
Deleting..... 448

Sulfur content..... 759, 760

Supersport menu display content
Selecting..... 403

Suspension
AMG ACTIVE RIDE CONTROL..... 354
AMG adaptive sport suspension system..... 353
Selecting the suspension setting..... 354

Switch-off delay time
Exterior..... 202
Interior..... 203

Switching air-recirculation mode on/off..... 218

Switching loudness normalization on/off
Advanced sound system..... 555
Burmester® 3D surround sound system..... 553

System PIN protection
Activating/deactivating..... 447

System settings
Activating/deactivating system PIN protection..... 447
MBUX reset function..... 451
Setting the distance unit..... 447
Setting the time zone..... 444
Setting the time/date format..... 444
Transmission of the vehicle position..... 444

T

Tabs
Managing..... 537

Tailgate, Trunk lid
Closing..... 137
Emergency key..... 141
HANDS-FREE ACCESS..... 139
Limiting the opening angle..... 141
Opening..... 136

Tank capacity
Fuel..... 761
Reserve..... 761

Tank filler cap / flap..... 23, 270

Technical data
Axle load (trailer operation)..... 775
Fastening points of the trailer hitch..... 773
High-voltage battery..... 772
Information..... 635
Mounting dimensions of a trailer hitch.... 773
Overhang dimension of the trailer hitch.. 773
Radio regulations..... 637
Specific absorption rate (SAR)..... 754
Tongue weight..... 774
Towing capacity..... 773
Vehicle dimensions..... 767

Telediagnosis
Diagnostic data..... 557

Telediagnostics
Transferred data..... 558

Telemetry display..... 455

Telephone, Smartphone
Activating functions during a call..... 509
Calls with several participants..... 509
Changing a function..... 506
Connecting a mobile phone..... 11, 505
Disconnecting a mobile phone..... 507
Importing contacts..... 511
Importing contacts (overview)..... 511
Incoming call during an existing call..... 510
Information..... 16, 505
Interchanging mobile phones..... 506
MBUX voice commands..... 416
Notes..... 503
Notes on wireless charging (mobile phone)..... 189
Operating modes..... 505
Reception and transmission volume..... 507
Secure Simple Pairing..... 11, 505
Setting the ringtone..... 508
Smartphone integration..... 21
Telephone menu overview..... 504
Telephone operation..... 509
Voice recognition..... 508
Wirelessly charging a(mobile phone, front)..... 190

Telephone (audio system)
Replacing a mobile phone..... 507

Telephony operating modes
Bluetooth® telephony..... 505
Television, Digital TV
MBUX voice commands..... 416
Temperature
Adjusting..... 213
Setting..... 212
Temperature grade..... 612
Text messages..... 417
THERMATIC
Air conditioning control panel..... 212
THERMOTRONIC
Air conditioning control panel..... 213
Tie-down eyes..... 39, 182
Time
Manual time setting..... 444
Setting the time zone..... 444
Setting the time/date format..... 444
TIN (Tire Identification Number)..... 613
Tire and Loading Information placard..... 608
Tire characteristics..... 615
Tire information table..... 608
Tire labeling
Characteristics..... 615
DOT, Tire Identification Number (TIN)..... 613
Load index..... 615
Load-bearing capacity..... 615
Maximum tire load..... 614
Maximum tire pressure..... 615
Size designation..... 615
Speed rating..... 615
Temperature grade..... 612
Tire Quality Grading..... 612
Traction grade..... 612
Tread wear grade..... 612
Tire pressure
Checking..... 605
Checking manually..... 25, 604
Maximum..... 615
Notes..... 601
Restarting the tire pressure loss warning system..... 607
Tire pressure loss warning system, function..... 607
Tire pressure table..... 603
TIREFIT kit..... 579
Tire pressure loss warning system
Function..... 607
Restarting..... 607
Tire pressure monitor
Function..... 604
Tire pressure monitoring system
Restarting..... 606
Tire pressure table..... 603
Tire Quality Grading..... 612
Tire sealant..... 579
Tire tread..... 31, 42, 600
Tire-change tool..... 53, 623
Tire-change tool kit..... 53, 623
TIREFIT kit, Tire inflation compressor
Storage location..... 54, 578
Tires
Breakdown..... 52, 576
Characteristics..... 615
Checking..... 31, 42, 600
Checking the temperature..... 605
Checking the tire pressure manually 25, 604
Definitions..... 618

DOT, Tire Identification Number (TIN)..... 613
Installing..... 627
Labeling..... 612
Load index..... 615
Load-bearing capacity..... 615
Maximum pressure..... 615
Maximum tire load..... 614
MOExtended..... 577
Noise..... 600
Notes on installing..... 620
Removing..... 627
Removing/installing hub cap..... 624
Replacing..... 620, 624
Restarting the tire pressure loss warning system..... 607
Rotating..... 623
Selecting..... 620
Size designation..... 615
Snow chains..... 42, 601
Speed rating..... 615
Storing..... 623
Temperature grade..... 612
Tire and Loading Information placard..... 608
Tire pressure loss warning system, function..... 607
Tire pressure table..... 603
Tire Quality Grading..... 612
TIREFIT kit..... 579
Traction grade..... 612
Tread wear grade..... 612
Unusual handling characteristics..... 600

Toll system
Debiting toll fees..... 495
Registering and activating..... 497
Windshield..... 211

Tongue weight..... 774

Top Tether..... 121

Topographical compensation, Predictive headlamp range control..... 195

Torque (driver's display)..... 402, 403

Touch Control
Driver's display..... 392
MBUX..... 428
Setting the sensitivity..... 428

Touch-sensitive controls..... 76

Touchscreen
Entering characters..... 441
Switching haptic operation on and off.... 429

Tow bar system
Towing away..... 391

Tow-away protection..... 150

Tow-starting..... 596

Towing
Towing methods..... 590, 591, 592

Towing a trailer
Active Lane Keeping Assist..... 350
Axle load..... 775
Notes..... 387

Towing eye
Storage location..... 594

Towing methods
Both axles on the ground..... 54, 592
Overview..... 590, 591, 592

Track Pace
Menu (driver display)..... 404

Track Race..... 452

Traction grade..... 612

Traffic information
Car-to-X-Communication..... 487
Displaying the traffic map..... 485
Displaying traffic incidents..... 485

Information on Live Traffic Information... 484
Overview... 484

Traffic Jam Assistant... 327

Traffic light warning/display... 342

Traffic Sign Assist
Function... 342
Setting... 346

Trailer drawbar, Pulling/towing... 391

Trailer hitch
Attaching the ball neck... 388
Axle load... 775
Care... 570
Coupling up/uncoupling a trailer... 389
Fastening points... 773
General notes... 773
Mounting dimensions... 773
Overhang dimension... 773
Tongue weight... 774
Towing capacity... 773
Trailer Maneuvering Assist... 383

Trailer Maneuvering Assist
Function... 383
Using... 385

Trailer operation
Active Blind Spot Assist... 349
Attaching the ball neck... 388
Coupling up/uncoupling a trailer... 389
Setting... 390

Trailer stabilization... 310

Transferred vehicle data
Android Auto... 520
Apple CarPlay®... 520

Transmission position display... 261

Transmission positions
DIRECT SELECT lever... 261

Transporting
Vehicle... 594

Tread wear grade... 612

TuneIn
Deleting stations... 539
Logging out... 539
Overview... 538
Registering... 539
Saving stations... 539
Selecting and connecting a station... 539
Selecting stream... 539
Setting options... 539

Turn signal indicator... 193

Turn signals... 193

TV
MBUX voice commands... 416

Two-way radios
Frequencies... 636
Installation... 635
Transmission output... 636

U

Understated menu display content
Selecting... 395, 398

Unfastening... 109

Units of measurement
Setting... 447

Unlocking setting... 128

Updating software, System update, Update
Error message... 451
Information... 449
Performing... 449

URL
Sharing..... 537

USB port
Rear passenger compartment..... 188
Storage compartments (front)..... 39, 173

USB port (multimedia system)
Connecting devices..... 542

User profiles, Personalization
Adding a user..... 431
Notes..... 430
Overview..... 430
Requirements for use..... 430
Selecting a user..... 434
Selecting options..... 432
Synchronizing..... 434
User-specific content..... 430

V

Valet Service Mode
Activating/deactivating..... 314
Function..... 314

Vehicle, Switching on the ignition
48 V on-board electrical system..... 79
Activating, Remote Online..... 233
Activating/deactivating standby mode... 303
Correct use..... 85
Data storage..... 87
Diagnostics connection..... 83
Emergency key..... 134
High-voltage on-board electrical system... 79
Information..... 21
KEYLESS-GO..... 132
Limited Warranty..... 87
lock automatically (MMS)..... 134
Locking/unlocking (emergency key)..... 134
Locking/unlocking (from inside)..... 132
Lowering..... 629
Maintenance..... 78
Medical aids..... 85
Parking..... 290
Parking for an extended period..... 302
Problem notification..... 86
Pulling..... 391
QR code rescue card..... 49, 87
Raising..... 625
Rocking free..... 266
Set collision detection..... 301, 302
Standby mode function..... 302
Starting (start/stop button)..... 231
starting, emergency operation mode..... 232
Stopping..... 290
Switching off (start/stop button)..... 290
Switching on (start/stop button)..... 230
Towing away..... 590, 591, 592
Transporting..... 594
Ventilating / comfort opening..... 143
Voice commands for MBUX voice assistant..... 417

Vehicle cameras..... 303

Vehicle data
Angle of approach/departure..... 769, 770
Display, MBUX..... 260
Displaying, DYNAMIC SELECT..... 260
Fording water..... 769, 770
Transferring to Android Auto..... 520
Transferring to Apple CarPlay®..... 520
Turning circle..... 767
Vehicle height..... 767
Vehicle length..... 767
Vehicle width..... 767
Weights..... 769
Wheelbase..... 767

Vehicle dimensions..... 767

Vehicle emergency start..... 596

Vehicle identification number..... 756
Vehicle identification plate
Model type..... 756
Paint code..... 756
VIN..... 756
Vehicle interior
Cooling/heating (Remote Online)..... 233
Vehicle key..... 127
Vehicle location
Switching transmission on/off..... 444
Vehicle operation outside the USA or Canada..... 78
Vehicle position
Sharing with a contact..... 493
Storing..... 483
Vehicle sensors..... 303
Vehicle socket
Care..... 570
Emergency release of the socket flap..... 289
Indicator lamps..... 281
Vehicle start
Emergency operation mode..... 232
Remote Online..... 233
Start/stop button..... 231
Vehicle tool kit
TIREFIT kit..... 54, 578
Towing eye..... 594
Ventilating..... 143
Ventilation..... 225
Vents
Air vents..... 225
Video recordings
Gallery app..... 527
VIN
Engine compartment..... 756
Identification plate..... 756
Seat..... 756
Vision
Defrosting windows..... 218
Windshield heater..... 220
Voice assistant
Voice prompting..... 412
Voice recognition..... 508

W

Warning system..... 149
Warning triangle..... 33, 49, 576
Warning/indicator lamp
ABS warning lamp..... 878
Active Brake Assist warning lamp..... 882, 883
ATTENTION ASSIST warning lamp..... 881
Brakes warning lamp (Canada only)..... 877
BRAKE Brakes warning lamp (USA only)... 877
Brakes warning lamp (yellow) (Canada only)..... 876
Check Engine warning lamp..... 873
Coolant warning lamp (red)..... 871
Coolant warning lamp (yellow)..... 872
Distance warning lamp..... 882
Electric parking brake indicator lamp (red) (Canada only)..... 875
PARK Electric parking brake indicator lamp (red) (USA only)..... 875

Electric parking brake indicator lamp (yellow)..... 875
Electrical malfunction warning lamp..... 869, 873
Engine operating temperature warning lamp..... 873, 874
ESP® OFF warning lamp..... 880
ESP® warning lamp flashes..... 879
ESP® warning lamp lights up..... 879
Fuel reserve warning lamp flashes..... 874
Fuel reserve warning lamp lights up..... 874
Mercedes-Benz emergency call system warning lamp..... 884
Occupant presence reminder warning lamp (white)..... 867
Occupant presence reminder warning lamp (yellow)..... 868
Power steering warning lamp (red)..... 869
Power steering warning lamp (yellow)..... 869
RBS warning lamp (USA only)..... 876
Rear axle steering warning lamp (red)..... 870
Rear axle steering warning lamp (yellow)..... 870
Reduced warning lamp power..... 868
Restraint system warning lamp..... 866
Seat belt warning lamp flashes..... 867
Seat belt warning lamp lights up... 867
Suspension warning lamp (yellow)..... 883
System malfunction warning lamp..... 868
Tire pressure monitoring system warning lamp flashes..... 884
Tire pressure monitoring system warning lamp lights up..... 885
Traffic Sign Assist warning lamp... 882

Warning/indicator lamps
Driver's display..... 864
PASSENGER AIR BAG..... 98

Washer fluid
Topping up..... 25, 44, 564
Windshield washer fluid..... 43, 765

Washing by hand..... 568

Water tank..... 565

Wear
Limited protection..... 106

Weather information..... 495

Web browser
Calling up a web page..... 535
Calling up options..... 536
Deleting a bookmark..... 537
Deleting browser data..... 537
Managing bookmarks..... 537
Setting in the background..... 538
Tabs..... 537

Web browsers
Calling up the settings..... 537
Sharing URLs..... 537
Weight information..... 756
what3words
Destination entry with a 3 word address..... 466
Wheel change
Installing a new wheel..... 627
Lowering the vehicle..... 629
Removing a wheel..... 627
Removing/installing hub caps..... 624
Wheel rotation..... 623
Wheels
Breakdown..... 52, 576
Care..... 570
Checking..... 31, 42, 600
Checking the tire pressure manually 25, 604
Checking the tire temperature..... 605
Definitions..... 618
DOT, Tire Identification Number (TIN)..... 613
Installing..... 627
Load index..... 615
Load-bearing capacity..... 615
Maximum tire load..... 614
Maximum tire pressure..... 615
MOExtended..... 577
Noise..... 600
Notes on installing..... 620
Removing..... 627
Removing/installing hub cap..... 624
Replacing..... 620, 624
Rotating..... 623
Selecting..... 620
Size designation..... 615
Snow chains..... 42, 601
Speed rating..... 615
Storing..... 623
Temperature grade..... 612
Tire and Loading Information placard..... 608
Tire characteristics..... 615
Tire labeling..... 612
Tire pressure..... 601
Tire pressure monitor..... 604
Tire Quality Grading..... 612
TIREFIT kit..... 579
Traction grade..... 612
Tread wear grade..... 612
Unusual handling characteristics..... 600
Wi-Fi
Activating/deactivating..... 446
Information on connection..... 445
Setting up a hotspot..... 446
Setting up an Internet connection..... 533
Window curtain air bag..... 110
Windows
Care..... 570
Convenience opening..... 143
De-icing..... 215
Opening with the SmartKey..... 143
Opening/closing..... 142
Removing mist..... 218
Windshield
De-icing..... 215
Defrosting..... 212
Demisting..... 213
Radio waves..... 211
Toll system..... 211
Windshield heater, Windshield heating..... 220
Windshield washer fluid..... 43, 765
Windshield washer system..... 25, 44, 564
Windshield wipers
Activating/deactivating..... 204

Replacing the wiper blades..... 27, 45, 205
Replacing the wiper blades (windshield)..... 27, 45, 205
Replacing wiper blades (rear window)..... 207

Winter operation
Activating/deactivating snow chain mode..... 601
Snow chains..... 42, 601

Wiper blades
Care..... 570
Replacing (windshield)..... 27, 45, 205

Wipers..... 204

Wireless charging
Mobile phone (front)..... 190
Notes..... 189

Workout programs..... 161

Workshop..... 84

Z

Zero layer
Function..... 422
Overview..... 423

Publication details

Internet
Further information about Mercedes-Benz vehicles and about Mercedes-Benz AG can be found on the following websites:

https://www.mbusa.com (USA only)

https://www.mercedes-benz.ca (Canada only)

Documentation team
©Mercedes-Benz AG: Not to be reprinted, translated or otherwise reproduced, in whole or in part, without written permission from Mercedes-Benz AG.

Vehicle manufacturer
Mercedes-Benz AG

Mercedesstraße 120

70372 Stuttgart

Germany

As at 24.04.23

F254 0138 13

Digital – in the vehicle

Explore the Operator's Manual in the multimedia system under "Vehicle". Begin with Quick Start and discover highlights and useful tips.

Vehicle document wallet

This contains a physical copy of comprehensive information about operating your vehicle and about services and your vehicle's warranty.

Order no. F254 0138 13
Edition B-2024